Navigation Tools: Click on the “Table of Contents” below, or use the Bookmarks to the left.

INTRODUCTION

How to Use This Manual

This manual is divided into multiple sections. The first page of each section is marked with a black tab that lines up with its corresponding thumb index tab on this page and the back cover. You can quickly find the first page of each section without looking through a full table of contents. The symbols printed at the top corner of each page can also be used as a quick reference system.
Each section includes:

1. A table of contents, or an exploded view index showing:
   - Parts disassembly sequence.
   - Bolt torques and thread sizes.
   - Page references to descriptions in text.
2. Disassembly/assembly procedures and tools.
3. Inspection.
4. Testing/troubleshooting.
5. Repair.
6. Adjustments.

Safety Messages

Your safety, and the safety of others, is very important. To help you make informed decisions, we have provided safety messages, and other safety information throughout this manual. Of course, it is not practical or possible to warn you about all the hazards associated with servicing this vehicle. You must use your own good judgment.
You will find important safety information in a variety of forms including:

- **Safety Labels** — on the vehicle.
- **Safety Messages** — preceded by a safety alert symbol ⚠ and one of three signal words, DANGER, WARNING, or CAUTION. These signal words mean:

⚠ DANGER	You WILL be KILLED or SERIOUSLY HURT if you don't follow instructions.
⚠ WARNING	You CAN be KILLED or SERIOUSLY HURT if you don't follow instructions.
⚠ CAUTION	You CAN be HURT if you don't follow instructions.

- **Instructions** — how to service this vehicle correctly and safely.

All information contained in this manual is based on the latest product information available at the time of printing. We reserve the right to make changes at anytime without notice. No part of this publication may be reproduced, or stored in a retrieval system, or transmitted, in any form by any means, electronic, mechanical, photocopying, recording, or otherwise, without the prior written permission of the publisher. This includes text, figures, and tables.

As you read this manual, you will find information that is preceded by a NOTICE symbol. The purpose of this message is to help prevent damage to your vehicle, other property, or the environment.

First Edition 05/2009
All Rights Reserved
Specifications apply to USA and Canada

Honda Motor Co., Ltd.
Service Publication Office

As sections with * include SRS components; special precautions are required when servicing.

marked sections are not included in this manual, see Volume 2.

General Information
Specifications
Maintenance
*Engine Electrical
Engine Mechanical
Engine Cooling
Fuel and Emissions
*Transaxle
*Steering
Suspension (Including TPMS)
Brakes (Including VSA)
*Body
*Heating, Ventilation, and Air Conditioning
*Body Electrical
*Audio, Navigation, and Telematics
*Restraints
*Driving Support

2009-10 Acura RL
Vol . 1 of 2

Find us on Facebook
BISHKO AUTOMOBILE LITERATURE

SUPPLEMENTAL RESTRAINT SYSTEM (SRS)

The Acura RL SRS includes a driver's airbag in the steering wheel hub, a passenger's airbag in the dashboard above the glove box, seat belt tensioners in the front seat belt retractors, side curtain airbags in the sides of the roof, and side airbags in the front seat-backs. Information necessary to safely service the SRS is included in this Service Manual. Items marked with an asterisk (*) on the contents page include or are located near SRS components. Servicing, disassembling, or replacing these items require special precautions and tools, and should be done by an authorized Acura dealer.

- To avoid rendering the SRS inoperative, which could lead to personal injury or death in the event of a severe frontal or side collision, all SRS service work should be done by an authorized Acura dealer.
- Improper service procedures, including incorrect removal and installation of the SRS, could lead to personal injury caused by unintentional deployment of the airbags, side airbags, and/or side curtain airbags.
- Do not bump or impact the SRS unit, front impact sensors, side impact sensors, or rear safing sensor, especially when the ignition switch is in ON (II), or for at least 3 minutes after the ignition switch is turned to LOCK (0); otherwise, the system may fail in a collision, or the airbags may deploy.
- SRS electrical connectors are identified by yellow color coding. Related components are located in the steering column, center console, dashboard, driver's dashboard lower cover, in the dashboard above the glove box, in the front seats, in the roof side, and around the floor. Do not use electrical test equipment on these circuits.

General Information

Chassis and Paint Codes
'09 Model 1-2
'10 Model 1-3

Identification Number Locations 1-4

Danger/Warning/Caution Label Locations 1-5

Under-hood Emission Control Label 1-7

Lift and Support Points 1-8

Towing 1-9

Parts Marking 1-11

Precautions for Super Handling All-Wheel Drive (SH-AWD) System 1-11

Chassis and Paint Codes

'09 Model

Vehicle Identification Number

JH4 KB2 6 3 * 9 C 000001

a b c d e f g h

a. **Manufacturer, Make, and Type of Vehicle**
JH4: Honda Motor Co., Ltd.
Acura passenger vehicle
b. **Line, Body, and Engine Type**
KB2: Acura RL/J37A2
c. **Body Type and Transmission Type**
6: 4-door Sedan/5-speed Automatic
d. **Vehicle Grade (Series)**
USA models
3: RL Hawaii model
5: RL
6: RL-TECH,
RL-TECH with ACC and CMBS
Canada models
3: RL, RL-PREMIUM
e. **Check Digit**
f. **Model Year**
9: '09
g. **Factory Code**
C: Saitama Factory in Japan
h. **Serial Number**
000001—: USA models
800001—: Canada models

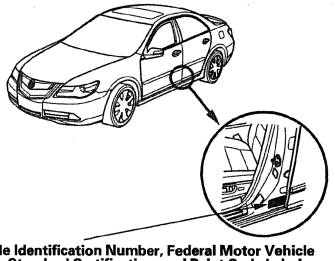

Vehicle Identification Number, Federal Motor Vehicle Safety Standard Certification, and Paint Code Label.

Vehicle Identification Number, Canadian Motor Vehicle Safety Standard Certification, and Paint Code Label.

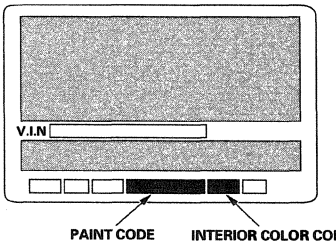

Engine Number

J37A2 - 1000001

a b

a. **Engine Type**
J37A2: 3.7 L SOHC VTEC Sequential Multiport Fuel-injected engine
b. **Serial Number**

Transmission Number

MJBA - 5000001

a b

a. **Transmission Type**
MJBA: 5-speed Automatic
b. **Serial Number**

Paint Code

Code	Color	USA models	Canada models
B-532P	Opulent Blue Pearl	○	○
NH-717P	Alberta White Pearl	○	○
NH-727M	Platinum Frost Metallic	○	○
NH-731P	Crystal Black Pearl	○	○
NH-736M	Grigio Metallic	○	○
NH-750M	Silver Jade Metallic	○	○
R-522P	Redondo Red Pearl	○	○
YR-575M	Tuscan Beige Metallic	○	○

'10 Model

Vehicle Identification Number

JH4 KB2 F 3 * A C 000001

a b c d e f g h

a. Manufacturer, Make, and Type of Vehicle
JH4: Honda Motor Co., Ltd.
Acura passenger vehicle
b. Line, Body, and Engine Type
KB2: Acura RL/J37A2
c. Body Type and Transmission Type
F: 4-door Sedan/5-speed Automatic
d. Vehicle Grade (Series)
USA models
3: RL Hawaii model
5: RL
6: RL-TECH,
RL-TECH with ACC and CMBS
Canada models
3: RL, RL-PREMIUM
e. Check Digit
f. Model Year
A:'10
g. Factory Code
C: Saitama Factory in Japan
h. Serial Number
000001—: USA models
800001—: Canada models

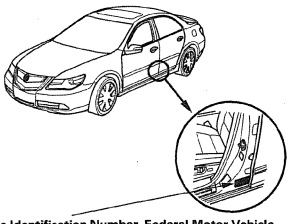

Vehicle Identification Number, Federal Motor Vehicle Safety Standard Certification, and Paint Code Label.

Vehicle Identification Number, Canadian Motor Vehicle Safety Standard Certification, and Paint Code Label.

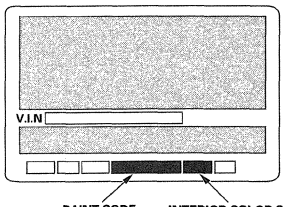

Engine Number

J37A2 - 2000001

a b

a. Engine Type
J37A2: 3.7 L SOHC VTEC Sequential Multiport Fuel-injected engine
b. Serial Number

Transmission Number

MJBA - 6000001

a b

a. Transmission Type
MJBA: 5-speed Automatic
b. Serial Number

Paint Code

Code	Color	USA models	Canada models
B-532P	Opulent Blue Pearl	○	○
NH-717P	Alberta White Pearl	○	○
NH-727M	Platinum Frost Metallic	○	○
NH-731P	Crystal Black Pearl	○	○
NH-736M	Grigio Metallic	○	○
NH-750M	Silver Jade Metallic	○	○
R-522P	Redondo Red Pearl	○	○
YR-575M	Tuscan Beige Metallic	○	○

Identification Number Locations

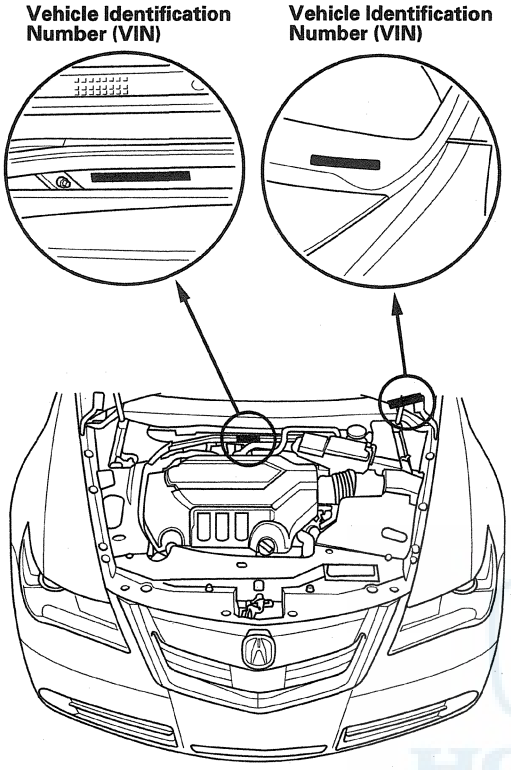

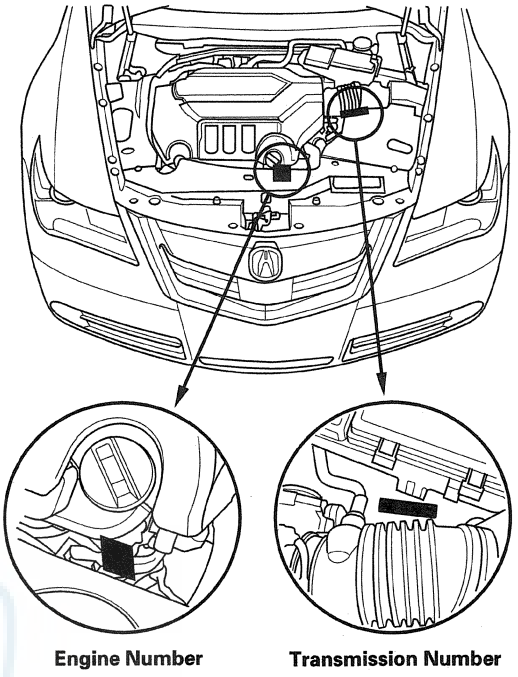

Danger/Warning/Caution Label Locations

Front Passenger's Compartment:

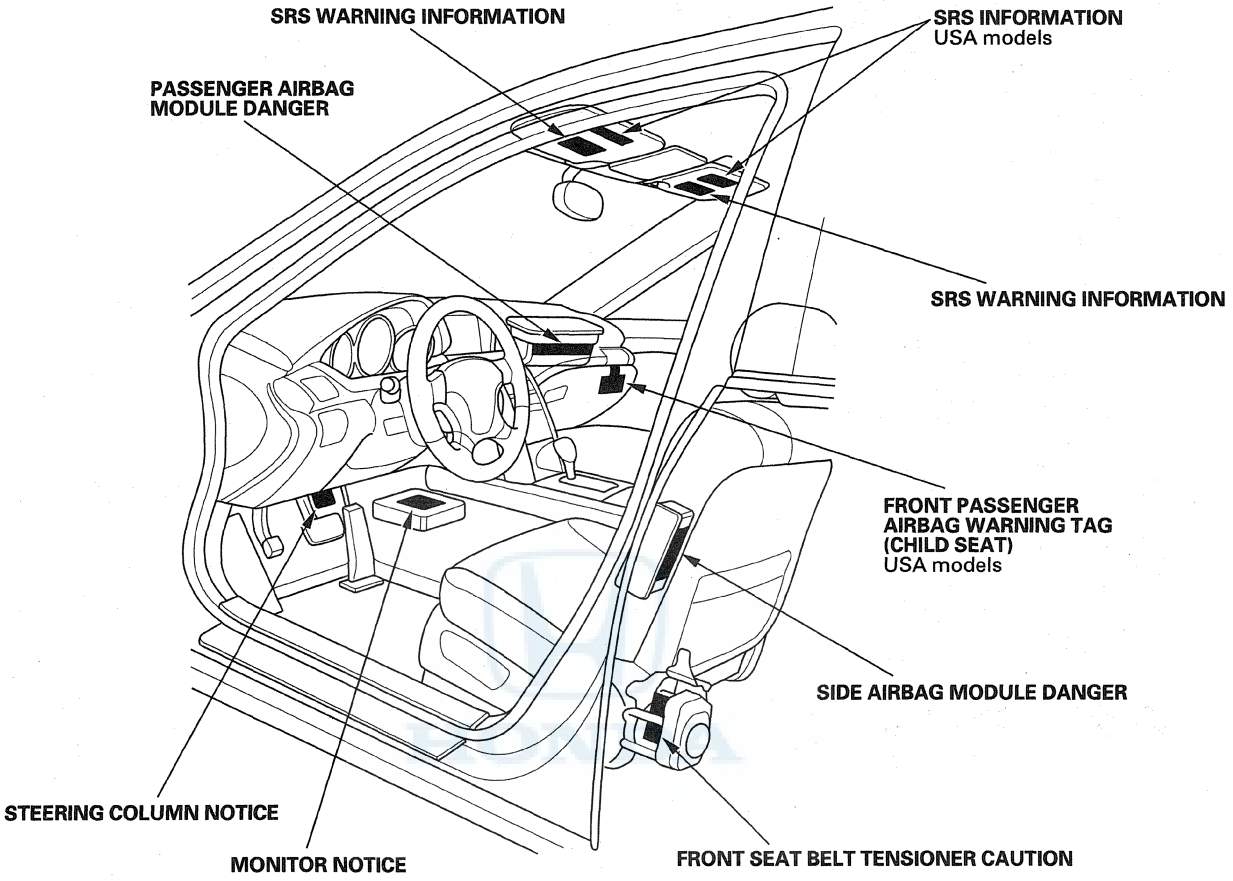

Steering Wheel:

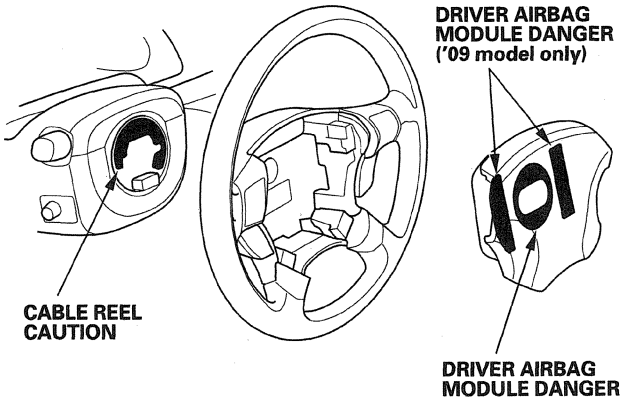

Rear Passenger's Compartment:

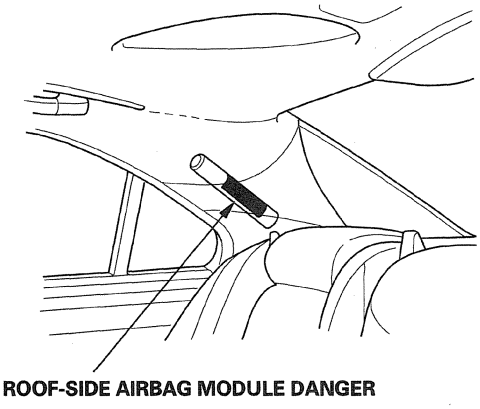

(cont'd)

Danger/Warning/Caution Label Locations (cont'd)

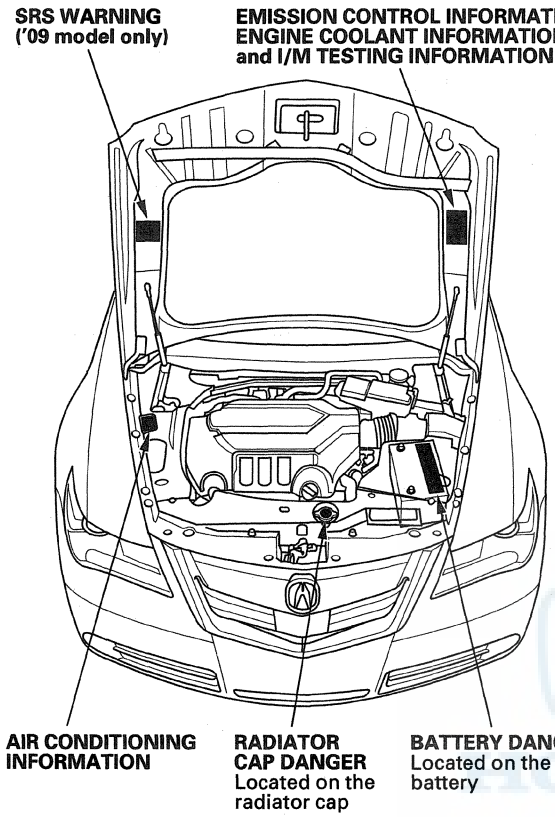

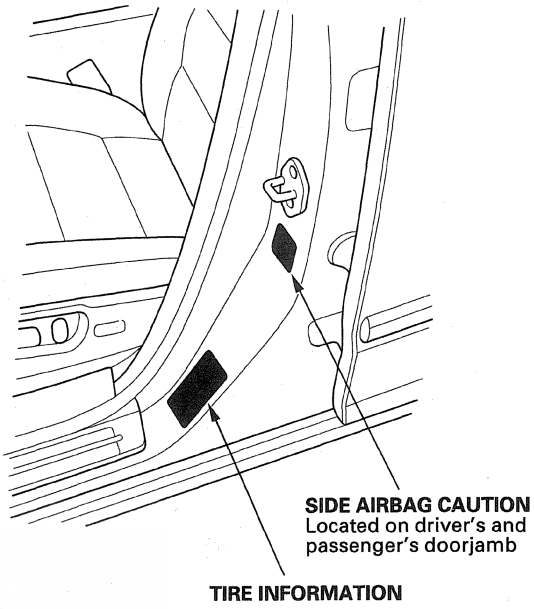

Under-hood Emission Control Label

Emission Group Identification

Example:

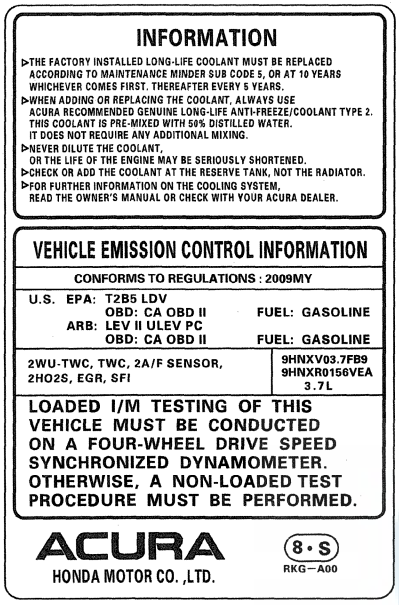

INFORMATION

▷THE FACTORY INSTALLED LONG-LIFE COOLANT MUST BE REPLACED ACCORDING TO MAINTENANCE MINDER SUB CODE 5, OR AT 10 YEARS WHICHEVER COMES FIRST. THEREAFTER EVERY 5 YEARS.
▷WHEN ADDING OR REPLACING THE COOLANT, ALWAYS USE ACURA RECOMMENDED GENUINE LONG-LIFE ANTI-FREEZE/COOLANT TYPE 2. THIS COOLANT IS PRE-MIXED WITH 50% DISTILLED WATER. IT DOES NOT REQUIRE ANY ADDITIONAL MIXING.
▷NEVER DILUTE THE COOLANT, OR THE LIFE OF THE ENGINE MAY BE SERIOUSLY SHORTENED.
▷CHECK OR ADD THE COOLANT AT THE RESERVE TANK, NOT THE RADIATOR.
▷FOR FURTHER INFORMATION ON THE COOLING SYSTEM, READ THE OWNER'S MANUAL OR CHECK WITH YOUR ACURA DEALER.

VEHICLE EMISSION CONTROL INFORMATION

CONFORMS TO REGULATIONS : 2009MY

U.S. EPA: T2B5 LDV
OBD: CA OBD II FUEL: GASOLINE
ARB: LEV II ULEV PC
OBD: CA OBD II FUEL: GASOLINE

2WU-TWC, TWC, 2A/F SENSOR, 2HO2S, EGR, SFI

9HNXV03.7FB9
9HNXR0156VEA
3.7L

LOADED I/M TESTING OF THIS VEHICLE MUST BE CONDUCTED ON A FOUR-WHEEL DRIVE SPEED SYNCHRONIZED DYNAMOMETER. OTHERWISE, A NON-LOADED TEST PROCEDURE MUST BE PERFORMED.

ACURA
HONDA MOTOR CO. ,LTD.

8・S
RKG—A00

Test Group and Evaporative Family

Test Group:

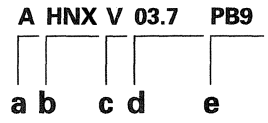

- **a. Model Year**
  9: '09
  A: '10
- **b. Manufacturer Subcode**
  HNX: HONDA
- **c. Family Type**
  V: LDV
- **d. Displacement Group**
- **e. Sequence Characters**
  FB9: '09
  PB9: '10

Evaporative Family:

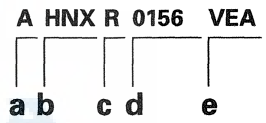

- **a. Model Year**
  9: '09
  A: '10
- **b. Manufacturer Subcode**
  HNX: HONDA
- **c. Family Type**
  R: Refueling
- **d. Canister Working Capacity Group**
- **e. Sequence Characters**

Lift and Support Points

NOTE: If you are going to remove heavy components such as suspension or the fuel tank from the rear of the vehicle, first support the front of the vehicle with tall safety stands. When substantial weight is removed from the rear of the vehicle, the center of gravity can change, causing the vehicle to tip forward on the lift.

Vehicle Lift

1. Position the lift blocks (A), under the vehicle's front support points (B) and rear support points (C) by the reference mark (D).

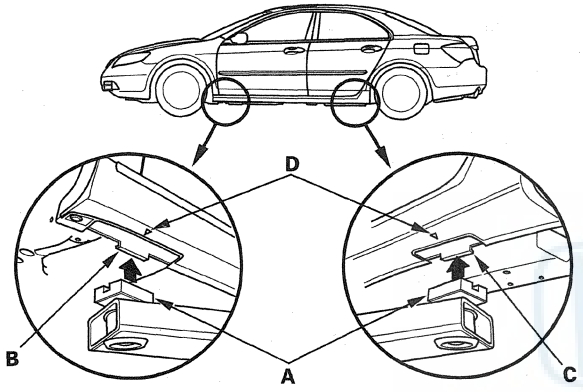

2. Raise the lift a few inches, and rock the vehicle gently to be sure it is firmly supported.
3. Raise the lift to its full height, and inspect the vehicle support points for solid contact with the lift blocks.

Safety Stands

To support the vehicle on safety stands, use the same support points as for a vehicle lift. Always use safety stands when working on or under any vehicle that is supported only by a jack.

Floor Jack

1. When lifting the front of the vehicle, set the parking brake. When lifting the rear of the vehicle, put the shift lever in P.
2. Block the wheels that are not being lifted.
3. Position the floor jack under the front jacking bracket (A) or the rear jacking bracket (B). Center the jacking bracket on the jack lift platform (C) and jack up the vehicle high enough to fit the safety stands under it.

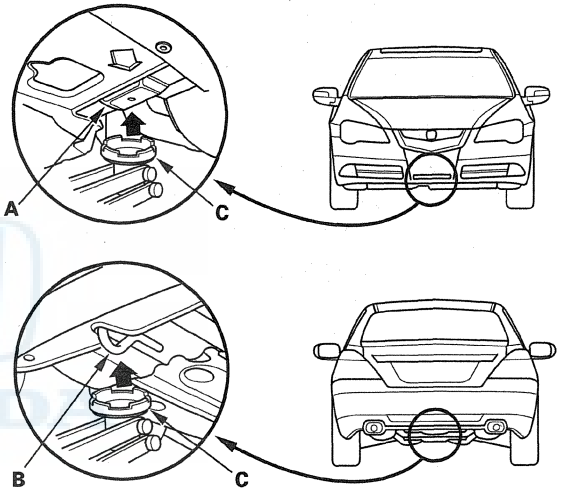

4. Position the safety stands under the support points, and adjust them so the vehicle is level.
5. Lower the vehicle onto the stands.

Towing

If the vehicle needs to be towed, call a professional towing service. Never tow the vehicle behind another vehicle with just a rope or chain. It is very dangerous.

Emergency Towing
There are three popular methods of towing a vehicle.

Flat-bed Tow Truck Equipment — The operator loads the vehicle on the back of a flat-bed tow truck. **This is the best way of transporting the vehicle.**

To accommodate the flat-bed tow truck equipment, the vehicle is equipped with front towing hooks (A), front tie down hook slots (B), a rear towing hook (C), and the rear tie down hook slots (D).

Front:

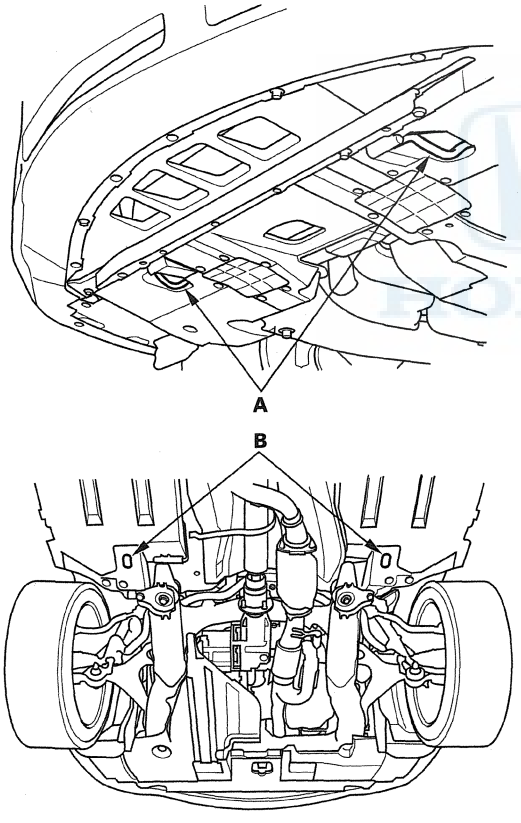

Rear:

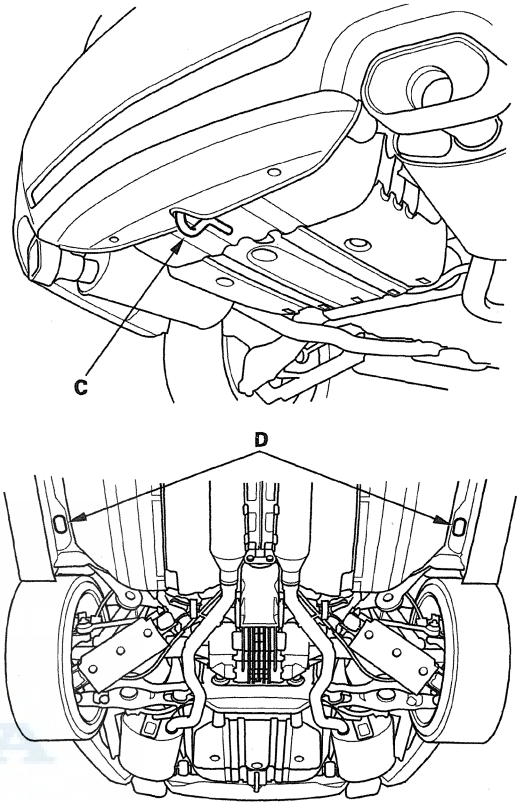

The towing hooks can be used with a winch to pull the vehicle onto the flat-bed tow truck, and the tie down hook slots can be used to secure the vehicle to the flat-bed tow truck.

(cont'd)

Towing (cont'd)

Front Towing Hook Installation
The detachable front towing hook is for towing very short distances, such as freeing the car. The hook attaches to the anchor in the front bumper.

NOTICE

- To avoid damage to the vehicle, use the towing hook for straight flat ground towing only. Do not tow on an angle.
- Do not use the detachable tow hook as a tie down for the vehicle on the flat-bed tow truck. Use the tie down hook slots provided.

1. Remove the cover (A) from the front bumper.

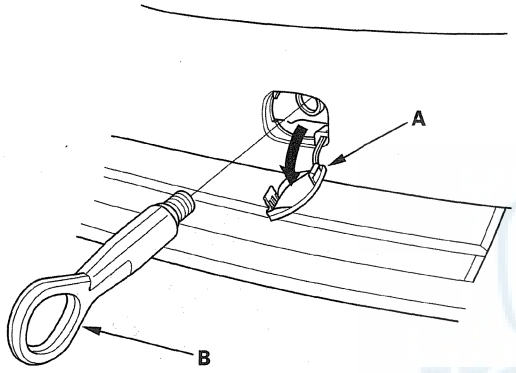

2. Remove the detachable towing hook from the tool kit in the trunk.

3. Screw in the towing hook (B), and tighten it securely by hand.

Wheel Lift Equipment — The tow truck uses two pivoting arms that go under the tires (front or rear) and lifts them off the ground. The other two wheels remain on the ground. **Never tow the vehicle with wheel lift equipment.**

Sling-type Equipment — The tow truck uses metal cables with hooks on the ends. These hooks go around parts of the frame or suspension, and the cables lift that end of the vehicle off the ground. The vehicle's suspension and body can be seriously damaged if this method of towing is attempted. **This method of towing the vehicle is unacceptable.**

The only recommended way of towing the RL is on a flat-bed tow truck.

NOTICE

- Towing the RL with only two wheels on the ground will damage parts of the SH-AWD system. If the vehicle is damaged, it should be towed on a flat-bed tow truck or trailer.
- Trying to lift or tow the vehicle by the bumpers will cause serious damage. The bumpers are not designed to support the vehicle's weight.

Parts Marking

To deter vehicle theft, certain major components are marked with the vehicle identification number (VIN). Original parts have self-adhesive labels. Replacement body parts have generic self-adhesive labels. These labels should not be removed. The original engine or transmission VIN plates are not transferable to the replacement engine or transmission.

NOTE: Be careful not to damage the parts marking labels during body repair. Mask the labels before repairing the part.

Precautions for Super Handling All-Wheel Drive (SH-AWD) System

This vehicle is equipped with the Super Handling All-Wheel Drive® (SH-AWD®) system. The SH-AWD system distributes driving torque between the front and rear wheels when accelerating and when wheel spin occurs.

The SH-AWD system does not have a manual switch to disable the AWD system. Whenever service work requires spinning the front or rear wheels with the engine, always lift and support the vehicle so all four wheels are off the ground.

Specifications

Standards and Service Limits

Engine Electrical 2-2
Engine Assembly 2-2
Cylinder Head 2-3
Engine Block 2-4
Engine Lubrication 2-5
Cooling System 2-5
Fuel and Emissions 2-5
Automatic Transmission and A/T Differential 2-6
Rear Differential 2-15
Steering 2-15
Suspension 2-15
Brakes 2-16
Air Conditioning 2-16

Design Specifications

Dimensions 2-17
Weight 2-17
Engine 2-17
Starter 2-17
Automatic Transmission 2-18
Steering 2-18
Suspension 2-18
Tires 2-18
Wheel Alignment 2-18
Brakes 2-18
Air Conditioning 2-18
Electrical Ratings 2-19
Body Specifications 2-20

Standards and Service Limits

Engine Electrical

Item	Measurement	Qualification	Standard or New	Service Limit
Ignition coil	Rated voltage		12 V	
	Firing order		1—4—2—5—3—6	
Spark plug	Type		NGK: IZKR7B-11S DENSO: SXU22HCR11S	
	Gap		1.0—1.1 mm (0.039—0.043 in)	———
Ignition timing	At idle Check the *red* mark	In N or P	10±2 °BTDC	
Drive belt	Tension		Auto-tensioner	
Alternator	Output at 13.5 V and normal engine temperature		130 A	
	Coil (rotor) resistance	At 68 °F (20 °C)	2.5 k Ω	
	Slip ring O.D.		14.4 mm (0.57 in)	14.0 mm (0.55 in)
	Brush length		10.5 mm (0.41 in)	1.5 mm (0.06 in)
	Brush spring tension		3.2 N (0.33 kgf, 0.73 lbf)	
Starter	Output		1.8 kW	
	Commutator mica depth		0.50—0.90 mm (0.020—0.035 in)	0.20 mm (0.008 in)
	Commutator runout		0.02 mm (0.0008 in) max.	0.05 mm (0.002 in)
	Commutator O.D.		28.9—29.0 mm (1.138—1.142 in)	28.0 mm (1.102 in)
	Brush length		15.0—16.0 mm (0.59—0.63 in)	9.0 mm (0.35 in)
	Brush spring tension (new)		22.3—27.3 N (2.27—2.78 kgf, 5.00—6.13 lbf)	

Engine Assembly

Item	Measurement	Qualification	Standard or New
Compression	Pressure	Minimum	930 kPa (9.5 kgf/cm^2, 135 psi)
	Check the engine with the starter cranking	Maximum variation	200 kPa (2.0 kgf/cm^2, 28 psi)

Cylinder Head

Item	Measurement	Qualification	Standard or New	Service Limit
Head	Warpage		———	0.05 mm (0.002 in)
	Height		120.95—121.05 mm (4.762—4.766 in)	———
Camshaft	End play		0.05—0.20 mm (0.002—0.008 in)	0.20 mm (0.008 in)
	Camshaft-to-holder oil clearance		0.050—0.089 mm (0.0020—0.0035 in)	0.15 mm (0.006 in)
	Total runout		0.03 mm (0.001 in) max.	0.04 mm (0.002 in)
	Cam lobe height	Intake (primary)	34.299 mm (1.3504 in)	———
		Intake (secondary)	35.932 mm (1.4146 in)	———
		Exhaust (primary)	36.734 mm (1.4462 in)	———
		Exhaust (secondary)	37.370 mm (1.4713 in)	———
Valve	Clearance (cold)	Intake	0.20—0.24 mm (0.008—0.009 in)	———
		Exhaust	0.28—0.32 mm (0.011—0.013 in)	———
	Stem O.D.	Intake	5.485—5.495 mm (0.2159—0.2163 in)	5.455 mm (0.2148 in)
		Exhaust	5.450—5.460 mm (0.2146—0.2150 in)	5.420 mm (0.2134 in)
	Stem-to-guide clearance	Intake	0.020—0.045 mm (0.0008—0.0018 in)	0.08 mm (0.003 in)
		Exhaust	0.055—0.080 mm (0.0022—0.0031 in)	0.11 mm (0.004 in)
Valve seat	Width	Intake	1.25—1.55 mm (0.049—0.061 in)	2.00 mm (0.079 in)
		Exhaust	1.25—1.55 mm (0.049—0.061 in)	2.00 mm (0.079 in)
	Stem installed height	Intake	46.75—47.55 mm (1.841—1.872 in)	47.80 mm (1.882 in)
		Exhaust	46.68—47.48 mm (1.838—1.869 in)	47.73 mm (1.879 in)
Valve spring	Free length	Intake	53.63 mm (2.11 in)	———
		Exhaust	51.32 mm (2.020 in)	———
Valve guide	I.D.	Intake	5.515—5.530 mm (0.2171—0.2177 in)	5.55 mm (0.219 in)
		Exhaust	5.515—5.530 mm (0.2171—0.2177 in)	5.55 mm (0.219 in)
	Installed height	Intake	21.20—22.20 mm (0.835—0.874 in)	———
		Exhaust	20.60—21.60 mm (0.811—0.850 in)	———
Rocker arm	Arm-to-shaft clearance	Intake	0.015—0.046 mm (0.0006—0.0018 in)	0.046 mm (0.0018 in)
		Exhaust	0.015—0.046 mm (0.0006—0.0018 in)	0.046 mm (0.0018 in)

Standards and Service Limits

Engine Block

Item	Measurement	Qualification	Standard or New	Service Limit
Block	Warpage of deck		0.07 mm (0.003 in) max.	———
	Bore diameter		90.000—90.015 mm (3.5433—3.5439 in)	90.065 mm (3.5459 in)
	Bore taper		———	0.05 mm (0.002 in)
Piston	Skirt O.D. at 16.0 mm (0.63 in) from bottom of skirt		89.983—89.996 mm (3.5426—3.5431 in)	89.975 mm (3.5423 in)
	Clearance in cylinder		0.004—0.032 mm (0.0002—0.0013 in)	0.070 mm (0.0027 in)
	Ring groove width	Top	1.240—1.255 mm (0.0488—0.0494 in)	1.27 mm (0.050 in)
		Second	1.220—1.235 mm (0.0480—0.0486 in)	1.25 mm (0.049 in)
		Oil	2.805—2.825 mm (0.1104—0.1112 in)	2.85 mm (0.112 in)
Piston ring	Ring-to-groove clearance	Top	0.055—0.085 mm (0.0022—0.0033 in)	0.15 mm (0.006 in)
		Second	0.030—0.060 mm (0.0012—0.0024 in)	0.13 mm (0.005 in)
	Ring end gap	Top	0.30—0.40 mm (0.012—0.016 in)	0.60 mm (0.024 in)
		Second	0.40—0.55 mm (0.016—0.022 in)	0.70 mm (0.028 in)
		Oil	0.20—0.70 mm (0.008—0.028 in)	0.80 mm (0.031 in)
Piston pin	O.D.		21.961—21.965 mm (0.8646—0.8648 in)	21.954 mm (0.8643 in)
	Pin-to-piston clearance		−0.005 to +0.002 mm (−0.0002 to +0.00008 in)	0.004 mm (0.0002 in)
Connecting rod	Pin-to-rod clearance		0.005—0.015 mm (0.0002—0.0006 in)	0.019 mm (0.0007 in)
	Small-end bore diameter		21.970—21.976 mm (0.8650—0.8652 in)	———
	Large-end bore diameter		60.0 mm (2.36 in)	———
	End play		0.15—0.35 mm (0.006—0.014 in)	0.45 mm (0.018 in)
Crankshaft	Main journal diameter		71.976—72.000 mm (2.8337—2.8346 in)	———
	Rod journal diameter		56.976—57.000 mm (2.2431—2.2441 in)	———
	Rod/main journal taper		0.005 mm (0.0002 in) max.	0.010 mm (0.0004 in)
	Rod/main journal out-of-round		0.005 mm (0.0002 in) max.	0.010 mm (0.0004 in)
	End play		0.10—0.35 mm (0.004—0.014 in)	0.45 mm (0.018 in)
	Runout		0.025 mm (0.0010 in) max.	0.030 mm (0.0012 in)
Crankshaft bearing	Main bearing-to-journal oil clearance		0.019—0.045 mm (0.0007—0.0018 in)	0.050 mm (0.0020 in)
	Connecting rod bearing-to-journal oil clearance		0.020—0.044 mm (0.0008—0.0017 in)	0.050 mm (0.0020 in)

Engine Lubrication

Item	Measurement	Qualification	Standard or New	Service Limit
Engine oil	Capacity	Engine overhaul	5.0 L (5.3 US qt)	
		Oil change, including filter	4.3 L (4.5 US qt)	
		Oil change, without filter	4.0 L (4.2 US qt)	
Oil pump	Inner rotor-to-outer rotor radial clearance		0.04—0.14 mm (0.002—0.005 in)	0.20 mm (0.008 in)
	Pump housing-to-outer rotor radial clearance		0.10—0.19 mm (0.004—0.007 in)	0.20 mm (0.008 in)
	Pump housing-to-outer rotor axial clearance		0.02—0.07 mm (0.001—0.003 in)	0.12 mm (0.005 in)
	Oil pressure with oil temperature at 176 °F (80 °C)	At idle	70 kPa (0.7 kgf/cm^2, 10 psi)	
		At 3,000 rpm	490 kPa (5.0 kgf/cm^2, 71 psi)	

Cooling System

Item	Measurement	Qualification	Standard or New
Radiator	Coolant capacities (including engine, heater, hoses, and reservoir) Use Acura Long Life Antifreeze/ Coolant Type 2	Engine overhaul	8.6 L (2.27 US gal)
		Coolant change	6.0 L (1.59 US gal)
Coolant reservoir	Coolant capacity		0.58 L (0.153 US gal)
Radiator cap	Opening pressure		93—123 kPa (0.95—1.25 kgf/cm^2, 14—18 psi)
Thermostat	Opening temperature	Begins to open	169—176 °F (76—80 °C)
		Fully open	194 °F (90 °C)
	Valve lift at fully open		Above 10.0 mm (0.39 in) min

Fuel and Emissions

Item	Measurement	Qualification	Standard or New
Fuel pressure regulator	Pressure with regulator vacuum hose disconnected		390—440 kPa (4.0—4.5 kgf/cm^2, 57—64 psi)
Fuel tank	Capacity		73.0 L (19.4 US gal)
Engine idle	Idle speed without load	In N or P	680±50 rpm
	Idle speed with high electrical load (A/C switch on, temperature set to max cool, blower fan on high, rear window defogger on, and headlights on high beam)	In N or P	680±50 rpm

Standards and Service Limits

Automatic Transmission and A/T Differential

Item	Measurement	Qualification	Standard or New	Service Limit
Automatic transmission fluid	Capacity Use Acura ATF-Z1	Fluid change Overhaul	2.8 L (3.0 US qt) 7.7 L (8.1 US qt)	
ATF pressure	Line pressure	At 2,000 rpm in N or P	950—1,010 kPa (9.7—10.3 kgf/cm², 140—146 psi)	900 kPa (9.2 kgf/cm², 130 psi)
	5th clutch pressure	At 2,000 rpm in 5th gear in S	940—1,020 kPa (9.6—10.4 kgf/cm², 140—148 psi)	890 kPa (9.1 kgf/cm², 130 psi)
	4th clutch pressure	At 2,000 rpm in 4th gear in S	940—1,020 kPa (9.6—10.4 kgf/cm², 140—148 psi)	890 kPa (9.1 kgf/cm², 130 psi)
	3rd clutch pressure	At 2,000 rpm in 3rd gear in S	940—1,020 kPa (9.6—10.4 kgf/cm², 140—148 psi)	890 kPa (9.1 kgf/cm², 130 psi)
	2nd clutch pressure	At 2,000 rpm in 2nd gear in S	940—1,020 kPa (9.6—10.4 kgf/cm², 140—148 psi)	890 kPa (9.1 kgf/cm², 130 psi)
	1st clutch pressure	At 2,000 rpm in 1st gear in S	940—1,020 kPa (9.6—10.4 kgf/cm², 140—148 psi)	890 kPa (9.1 kgf/cm², 130 psi)
	1st-hold clutch pressure	At 2,000 rpm in 1st gear in S	680—760 kPa (6.9—7.7 kgf/cm², 98—110 psi)	630 kPa (6.4 kgf/cm², 91 psi)
Torque converter	Stall speed Check with vehicle on level ground		1,850 rpm	1,700—2,000 rpm
Clutch	Clearance between clutch end-plate top disc	1st	———	1.15—1.35 mm (0.045—0.053 in)
		2nd	———	1.05—1.25 mm (0.041—0.049 in)
		3rd	———	0.9—1.1 mm (0.035—0.043 in)
		4th	———	0.75—0.95 mm (0.030—0.037 in)
		5th	———	0.75—0.95 mm (0.030—0.037 in)
		1st-hold	———	0.6—1.0 mm (0.024—0.039 in)
	Clutch return spring free length	1st	68.3 mm (2.69 in)	66.3 mm (2.61 in)
		2nd	48.3 mm (1.90 in)	46.3 mm (1.82 in)
		3rd	52.0 mm (2.05 in)	50.0 mm (1.97 in)
		4th	37.4 mm (1.47 in)	35.4 mm (1.39 in)
		5th	47.9 mm (1.89 in)	45.9 mm (1.81 in)
	Clutch disc thickness		1.94 mm (0.076 in)	———
	Clutch plate thickness	1st	1.6 mm (0.063 in)	When discolored
		2nd	1.8 mm (0.071 in)	When discolored
		3rd	1.8 mm (0.071 in)	When discolored
		4th	1.6 mm (0.063 in)	When discolored
		5th	1.6 mm (0.063 in)	When discolored
		1st-hold	1.8 mm (0.071 in)	When discolored
	1st clutch end-plate thickness	Mark 1	3.1 mm (0.122 in)	When discolored
		Mark 2	3.2 mm (0.126 in)	When discolored
		Mark 3	3.3 mm (0.130 in)	When discolored
		Mark 4	3.4 mm (0.134 in)	When discolored
		Mark 5	3.5 mm (0.138 in)	When discolored
		Mark 6	3.6 mm (0.142 in)	When discolored
		Mark 7	3.7 mm (0.146 in)	When discolored
		Mark 8	3.8 mm (0.150 in)	When discolored
		Mark 9	3.9 mm (0.154 in)	When discolored
	1st-hold clutch plate B thickness		5.0 mm (0.197 in)	When discolored

Item	Measurement	Qualification	Standard or New	Service Limit
Clutch (cont'd)	2nd, 3rd, 4th, and 5th clutch end plate thickness	Mark 1	2.1 mm (0.083 in)	When discolored
		Mark 2	2.2 mm (0.087 in)	When discolored
		Mark 3	2.3 mm (0.091 in)	When discolored
		Mark 4	2.4 mm (0.094 in)	When discolored
		Mark 5	2.5 mm (0.098 in)	When discolored
		Mark 6	2.6 mm (0.102 in)	When discolored
		Mark 7	2.7 mm (0.106 in)	When discolored
		Mark 8	2.8 mm (0.110 in)	When discolored
		Mark 9	2.9 mm (0.114 in)	When discolored
Stator shaft	I.D. at needle bearing contact area	Torque converter side	27.000—27.021 mm (1.063—1.064 in)	When worn or damaged
		ATF pump side	31.000—31.025 mm (1.220—1.221 in)	———
	I.D. at mainshaft sealing ring contact area		31.000—31.025 mm (1.220—1.221 in)	31.05 mm (1.222 in)
ATF pump	Gear-to-body thrust clearance		0.03—0.06 mm (0.001—0.002 in)	0.07 mm (0.003 in)
	Gear-to-body clearance	Drive gear	0.210—0.265 mm (0.008—0.010 in)	———
		Driven gear	0.070—0.125 mm (0.003—0.005 in)	———
	Driven gear I.D.		14.016—14.034 mm (0.5518—0.5525 in)	When worn or damaged
	Driven gear shaft O.D.		13.980—13.990 mm (0.5504—0.5508 in)	When worn or damaged
Reverse shift fork	Fork finger thickness		5.90—6.00 mm (0.232—0.236 in)	5.4 mm (0.213 in)
Park gear and pawl	———		———	When worn or damaged
Regulator valve body	Shift fork shaft bore I.D.		14.000—14.010 mm (0.5512—0.5516 in)	———
	Shift fork shaft/servo valve bore I.D.		37.000—37.039 mm (1.4567—1.4582 in)	37.045 mm (1.4585 in)
	Mainshaft sealing ring contact I.D.		31.000—31.025 mm (1.220—1.221 in)	31.05 mm (1.222 in)
Main valve body	Intermediary shaft sealing ring contact I.D.		35.000—35.025 mm (1.3780—1.3789 in)	35.05 mm (1.3799 in)
ATF guide collar	Secondary shaft sealing ring contact I.D.		29.000—29.021 mm (1.1417—1.1426 in)	29.05 mm (1.1437 in)
Mainshaft	Diameter at stator shaft needle bearing contact area		22.984—23.000 mm (0.9049—0.9055 in)	When worn or damaged
	5th gear collar diameter at needle bearing contact area		39.981—39.991 mm (1.5741—1.5744 in)	When worn or damaged
	5th gear collar length		48.7—48.8 mm (1.917—1.921 in)	———
	5th gear collar flange thickness		4.5—4.7 mm (0.177—0.185 in)	When worn or damaged
	5th gear I.D.		46.000—46.016 mm (1.8110—1.8116 in)	When worn or damaged
	5th gear axial clearance		0.10—0.22 mm (0.004—0.009 in)	———
	Sealing ring thickness		1.90—1.96 mm (0.074—0.077 in)	1.85 mm (0.073 in)
	Sealing ring groove width		2.025—2.060 mm (0.080—0.081 in)	2.08 mm (0.082 in)

(cont'd)

Automatic Transmission and A/T Differential (cont'd)

Item	Measurement	Qualification	Standard or New	Service Limit
Countershaft	Diameter at bearing contact area	Torque converter housing bearing	40.505—40.515 mm (1.5947—1.5951 in)	When worn or damaged
		5th gear	34.975—34.991 mm (1.3770—1.3776 in)	When worn or damaged
	Diameter of 2nd gear at needle bearing contact area		61.975—61.991 mm (2.4400—2.4406 in)	When worn or damaged
	Reverse gear collar O.D.		39.979—40.000 mm (1.5740—1.5748 in)	When worn or damaged
	Reverse selector hub O.D.		55.885—55.900 mm (2.200—2.201 in)	When worn or damaged
	Cotter thickness	4th gear	1.99—2.02 mm (0.078—0.080 in)	———
		2nd gear	7.44—7.52 mm (0.293—0.296 in)	———
	I.D. of gears	5th gear	41.000—41.016 mm (1.6142—1.6148 in)	When worn or damaged
		Idler gear	70.000—70.019 mm (2.7559—2.7566 in)	When worn or damaged
		Reverse gear	46.000—46.016 mm (1.8110—1.8116 in)	When worn or damaged
	Axial clearance of gears	2nd gear	0.005—0.040 mm (0.0002—0.0016 in)	———
		5th gear	0.12—0.27 mm (0.0047—0.0106 in)	———
		Idler gear	0.005—0.040 mm (0.0002—0.0016 in)	———
		Reverse gear	0.10—0.25 mm (0.0039—0.0098 in)	———
	61 mm washer thickness	A	1.525 mm (0.0600 in)	When worn or damaged
		B	1.505 mm (0.0593 in)	When worn or damaged
		C	1.485 mm (0.0585 in)	When worn or damaged
		D	1.465 mm (0.0577 in)	When worn or damaged
		E	1.445 mm (0.0569 in)	When worn or damaged
		F	1.425 mm (0.0561 in)	When worn or damaged
		G	1.405 mm (0.0553 in)	When worn or damaged
	50.8 mm washer thickness	A	1.91 mm (0.0752 in)	When worn or damaged
		B	1.93 mm (0.0760 in)	When worn or damaged
		C	1.95 mm (0.0768 in)	When worn or damaged
		D	1.97 mm (0.0776 in)	When worn or damaged
		E	1.99 mm (0.0783 in)	When worn or damaged
		F	2.01 mm (0.0791 in)	When worn or damaged
		G	2.03 mm (0.0799 in)	When worn or damaged
		H	2.05 mm (0.0807 in)	When worn or damaged
		I	2.07 mm (0.0815 in)	When worn or damaged
		J	2.09 mm (0.0823 in)	When worn or damaged
		K	2.11 mm (0.0831 in)	When worn or damaged
		L	2.13 mm (0.0839 in)	When worn or damaged
		M	2.15 mm (0.0846 in)	When worn or damaged
		N	2.17 mm (0.0854 in)	When worn or damaged
		O	2.19 mm (0.0862 in)	When worn or damaged
		P	2.21 mm (0.0870 in)	When worn or damaged
		Q	2.23 mm (0.0878 in)	When worn or damaged
		R	2.25 mm (0.0886 in)	When worn or damaged
		S	2.27 mm (0.0894 in)	When worn or damaged
		T	2.29 mm (0.0902 in)	When worn or damaged
		U	2.31 mm (0.0909 in)	When worn or damaged
		V	2.33 mm (0.0917 in)	When worn or damaged
		W	2.35 mm (0.0925 in)	When worn or damaged
		X	2.37 mm (0.0933 in)	When worn or damaged
		Y	2.39 mm (0.0941 in)	When worn or damaged
		Z	2.41 mm (0.0949 in)	When worn or damaged
		AA	2.43 mm (0.0957 in)	When worn or damaged
		AB	2.45 mm (0.0965 in)	When worn or damaged
	35 x 47 mm thrust washer thickness		2.97—3.00 mm (0.1169—0.1181 in)	When worn or damaged

Item	Measurement	Qualification	Standard or New	Service Limit
Secondary shaft	Diameter at bearing contact area	2nd gear	43.986—43.999 mm (1.7317—1.7322 in)	When worn or damaged
		Torque converter housing bearing	32.002—32.015 mm (1.2599—1.2604 in)	When worn or damaged
		Torque converter housing bearing (shaft end side)	28.592—28.608 mm (1.1257—1.1263 in)	When worn or damaged
	Diameter of 1st gear collar at needle bearing contact area		38.981—38.991 mm (1.5347—1.5351 in)	When worn or damaged
	I.D. of gears	1st gear	44.000—44.013 mm (1.7323—1.7328 in)	When worn or damaged
		2nd gear	50.00—50.02 mm (1.9685—1.9693 in)	When worn or damaged
	Axial clearance of gears	1st gear	0.100—0.145 mm (0.004—0.006 in)	———
		2nd gear	0.060—0.488 mm (0.0024—0.0192 in)	———
	52 mm thrust washer thickness	A	2.705 mm (0.106 in)	When worn or damaged
		B	2.680 mm (0.106 in)	When worn or damaged
		C	2.655 mm (0.105 in)	When worn or damaged
		D	2.630 mm (0.104 in)	When worn or damaged
		E	2.605 mm (0.103 in)	When worn or damaged
		F	2.580 mm (0.102 in)	When worn or damaged
		G	2.555 mm (0.101 in)	When worn or damaged
		H	2.530 mm (0.100 in)	When worn or damaged
		I	2.505 mm (0.099 in)	When worn or damaged
		J	2.480 mm (0.098 in)	When worn or damaged
		K	2.455 mm (0.097 in)	When worn or damaged
		L	2.430 mm (0.096 in)	When worn or damaged
		M	2.405 mm (0.095 in)	When worn or damaged
	1st gear collar length		63.3—63.4 mm (2.4921—2.4961 in)	———
	Splined washer thickness		8.966—9.010 mm (0.3530—0.3547 in)	———
	Sealing ring thickness		1.91—1.97 mm (0.075—0.078 in)	1.86 mm (0.073 in)
	Sealing ring groove width		2.025—2.060 mm (0.080—0.081 in)	2.08 mm (0.082 in)
	ATF feed pipe O.D.	1st clutch	11.47—11.48 mm (0.4516—0.4520 in)	11.45 mm (0.4508 in)
		1st-hold clutch	5.97—5.98 mm (0.2350—0.2354 in)	5.95 mm (0.2343 in)
	Feed pipe bushing I.D.	1st clutch	11.518—11.530 mm (0.4535—0.4539 in)	11.545 mm (0.4545 in)
		1st-hold clutch	6.018—6.030 mm (0.2369—0.2374 in)	6.045 mm (0.2380 in)

(cont'd)

Automatic Transmission and A/T Differential (cont'd)

Item	Measurement	Qualification	Standard or New	Service Limit
Secondary shaft (cont'd)	65 mm thrust shim thickness	0A	0.80 mm (0.031 in)	When worn or damaged
		A	0.84 mm (0.033 in)	When worn or damaged
		B	0.88 mm (0.035 in)	When worn or damaged
		C	0.92 mm (0.036 in)	When worn or damaged
		D	0.96 mm (0.038 in)	When worn or damaged
		E	1.00 mm (0.039 in)	When worn or damaged
		F	1.04 mm (0.041 in)	When worn or damaged
		G	1.08 mm (0.043 in)	When worn or damaged
		H	1.12 mm (0.044 in)	When worn or damaged
		I	1.16 mm (0.046 in)	When worn or damaged
		J	1.20 mm (0.047 in)	When worn or damaged
		K	1.24 mm (0.049 in)	When worn or damaged
		L	1.28 mm (0.050 in)	When worn or damaged
		M	1.32 mm (0.052 in)	When worn or damaged
		N	1.36 mm (0.054 in)	When worn or damaged
		O	1.40 mm (0.055 in)	When worn or damaged
		P	1.44 mm (0.057 in)	When worn or damaged
		Q	1.48 mm (0.058 in)	When worn or damaged
		R	1.52 mm (0.060 in)	When worn or damaged
		S	1.56 mm (0.061 in)	When worn or damaged
		T	1.60 mm (0.063 in)	When worn or damaged
		U	1.64 mm (0.065 in)	When worn or damaged
		V	1.68 mm (0.066 in)	When worn or damaged
		W	1.72 mm (0.068 in)	When worn or damaged
		X	1.76 mm (0.069 in)	When worn or damaged
		Y	1.80 mm (0.071 in)	When worn or damaged
		Z	1.84 mm (0.072 in)	When worn or damaged
		AA	1.88 mm (0.074 in)	When worn or damaged
		AB	1.92 mm (0.076 in)	When worn or damaged
		AC	1.96 mm (0.077 in)	When worn or damaged
		AD	2.00 mm (0.079 in)	When worn or damaged
		AE	2.04 mm (0.080 in)	When worn or damaged
		AF	2.08 mm (0.082 in)	When worn or damaged
		AG	2.12 mm (0.083 in)	When worn or damaged
		AH	2.16 mm (0.085 in)	When worn or damaged
		AI	2.20 mm (0.087 in)	When worn or damaged
		AJ	2.24 mm (0.088 in)	When worn or damaged
		AK	2.28 mm (0.090 in)	When worn or damaged
		AL	2.32 mm (0.091 in)	When worn or damaged
		AM	0.76 mm (0.030 in)	When worn or damaged

Item	Measurement	Qualification	Standard or New	Service Limit
Intermediary shaft	I.D. of 3rd gear		36.000—36.016 mm (1.4173—1.4179 in)	When worn or damaged
	Axial clearance of 3rd gear		0.005—0.045 mm (0.0002—0.0018 in)	———
	Cotter thickness		2.99—3.02 mm (0.1177—0.1189 in)	———
	Sealing ring thickness		1.89—1.95 mm (0.0744—0.0768 in)	1.84 mm (0.0724 in)
	Sealing ring groove width		2.025—2.060 mm (0.080—0.081 in)	2.08 mm (0.082 in)
	53 mm splined washer thickness	A	3.995 mm (0.1573 in)	When worn or damaged
		B	4.015 mm (0.1581 in)	When worn or damaged
		C	4.035 mm (0.1589 in)	When worn or damaged
		D	4.055 mm (0.1596 in)	When worn or damaged
		E	4.075 mm (0.1604 in)	When worn or damaged
		F	4.095 mm (0.1612 in)	When worn or damaged
		G	4.115 mm (0.1620 in)	When worn or damaged
		H	4.135 mm (0.1628 in)	When worn or damaged
		I	4.155 mm (0.1636 in)	When worn or damaged
		J	4.175 mm (0.1644 in)	When worn or damaged
		K	4.195 mm (0.1652 in)	When worn or damaged
		L	4.215 mm (0.1659 in)	When worn or damaged
		M	4.235 mm (0.1667 in)	When worn or damaged
		N	4.255 mm (0.1675 in)	When worn or damaged
	26.5 mm washer thickness	A	1.05 mm (0.041 in)	When worn or damaged
		B	1.13 mm (0.044 in)	When worn or damaged
		C	1.21 mm (0.048 in)	When worn or damaged
		D	1.29 mm (0.051 in)	When worn or damaged
		E	1.37 mm (0.054 in)	When worn or damaged
		F	1.45 mm (0.057 in)	When worn or damaged
		G	1.53 mm (0.060 in)	When worn or damaged
		H	1.61 mm (0.063 in)	When worn or damaged
		I	1.69 mm (0.067 in)	When worn or damaged
		J	1.77 mm (0.070 in)	When worn or damaged
		K	1.85 mm (0.073 in)	When worn or damaged
		L	1.93 mm (0.076 in)	When worn or damaged
		M	2.01 mm (0.079 in)	When worn or damaged
		N	2.09 mm (0.082 in)	When worn or damaged
		O	0.97 mm (0.038 in)	When worn or damaged
Reverse idler gear	Gear shaft O.D.		13.99—14.00 mm (0.5508—0.5512 in)	When worn or damaged
	I.D. of transmission housing of gear shaft contact area		14.006—14.024 mm (0.5514—0.5521 in)	———
	I.D.		18.007—18.020 mm (0.7089—0.7094 in)	When worn or damaged
	Axial clearance		0.07—0.38 mm (0.003—0.015 in)	———
	Thrust washer thickness	Transmission housing	0.97—1.05 mm (0.038—0.041 in)	———
		Holder side	0.97—1.05 mm (0.038—0.041 in)	———

(cont'd)

Standards and Service Limits

Automatic Transmission and A/T Differential (cont'd)

Item	Measurement	Qualification	Standard or New			
			Wire Diameter	O.D.	Free Length	No. of Coil
Main valve body spring (see page 14-278)	Torque converter check valve spring		1.1 mm (0.043 in)	8.6 mm (0.339 in)	34.3 mm (1.350 in)	10.1
	Lock-up shift valve spring		1.0 mm (0.039 in)	6.6 mm (0.260 in)	35.5 mm (1.398 in)	18.2
	Shift valve E spring		0.7 mm (0.028 in)	6.6 mm (0.260 in)	42.4 mm (1.669 in)	17.6
	Shift valve A spring		0.9 mm (0.035 in)	6.6 mm (0.260 in)	50.5 mm (1.988 in)	23.3
	Shift valve B spring		0.8 mm (0.031 in)	6.6 mm (0.260 in)	49.1 mm (1.933 in)	21.7
	Modulator valve spring		1.6 mm (0.063 in)	10.4 mm (0.409 in)	33.5 mm (1.319 in)	9.8
	CPC valve A spring		0.7 mm (0.028 in)	6.1 mm (0.240 in)	17.8 mm (0.701 in)	7.9
	Servo control valve spring		0.9 mm (0.035 in)	9.6 mm (0.378 in)	30.2 mm (1.189 in)	8.4
	Lubrication control valve spring		0.9 mm (0.035 in)	8.7 mm (0.343 in)	25.0 mm (0.984 in)	7.2
	Lock-up timing valve spring		0.6 mm (0.024 in)	6.6 mm (0.260 in)	30.9 mm (1.217 in)	11.1
	Relief valve spring		1.0 mm (0.039 in)	9.6 mm (0.378 in)	28.1 mm (1.106 in)	7.7
Secondary valve body spring (see page 14-280)	CPC valve C spring		0.7 mm (0.028 in)	6.1 mm (0.240 in)	17.8 mm (0.701 in)	7.9
	Shift valve D spring		0.7 mm (0.028 in)	6.6 mm (0.260 in)	42.4 mm (1.669 in)	17.6
	Reverse CPC valve spring		0.8 mm (0.031 in)	6.1 mm (0.240 in)	24.4 mm (0.961 in)	14.6
	Shift valve C spring		0.8 mm (0.031 in)	6.6 mm (0.260 in)	49.1 mm (1.933 in)	21.7
	CPC valve B spring		0.7 mm (0.028 in)	6.1 mm (0.240 in)	17.8 mm (0.701 in)	7.9
	Reverse control valve spring		0.8 mm (0.031 in)	6.6 mm (0.260 in)	49.1 mm (1.933 in)	21.7
Regulator valve body spring (see page 14-281)	3rd accumulator spring		3.1 mm (0.122 in)	19.6 mm (0.772 in)	41.4 mm (1.630 in)	5.5
	Cooler check valve spring		0.9 mm (0.035 in)	6.7 mm (0.264 in)	31.5 mm (1.240 in)	14.2
	Lock-up control valve spring (Either type A or type B is applied)	Type A	0.7 mm (0.028 in)	6.6 mm (0.260 in)	42.9 mm (1.689 in)	14.2
		Type B	0.8 mm (0.031 in)	6.6 mm (0.260 in)	44.3 mm (1.744 in)	25.5
	Regulator valve spring B		1.4 mm (0.055 in)	8.8 mm (0.346 in)	44.0 mm (1.732 in)	12.0
	Regulator valve spring A		1.85 mm (0.073 in)	14.7 mm (0.579 in)	86.9 mm (3.421 in)	16.2
	Stator reaction spring		5.5 mm (0.217 in)	37.4 mm (1.472 in)	30.3 mm (1.193 in)	2.1

Item	Measurement	Qualification	Standard or New			
			Wire Diameter	O.D.	Free Length	No. of Coil
Accumulator body spring (see page 14-282)	4th accumulator spring		3.3 mm (0.130 in)	19.6 mm (0.772 in)	39.1 mm (1.539 in)	5.8
	2nd accumulator spring		3.1 mm (0.122 in)	19.6 mm (0.772 in)	53.4 mm (2.102 in)	7.5
	1st accumulator spring A		2.3 mm (0.091 in)	19.6 mm (0.772 in)	60.8 mm (2.394 in)	9.5
	1st accumulator spring B		2.5 mm (0.098 in)	12.8 mm (0.504 in)	46.0 mm (1.811 in)	9.5
	5th accumulator spring A		2.4 mm (0.094 in)	19.6 mm (0.772 in)	65.5 mm (2.579 in)	12.0
	5th accumulator spring B		2.6 mm (0.102 in)	13.2 mm (0.520 in)	50.5 mm (1.988 in)	10.1
	1st-hold accumulator spring		2.0 mm (0.079 in)	13.1 mm (0.516 in)	42.9 mm (1.689 in)	9.8

Item	Measurement	Qualification	Standard or New	Service Limit
A/T differential carrier	Pinion shaft contact area I.D.		18.000—18.025 mm (0.7087—0.7096 in)	———
	Clearance between carrier and pinion shaft		0.013—0.054 mm (0.0005—0.0021 in)	0.1 mm (0.004 in)
	Driveshaft contact area I.D.		30.025—30.055 mm (1.182—1.183 in)	———
	Clearance between carrier and driveshaft		0.045—0.096 mm (0.002—0.004 in)	0.13 mm (0.005 in)
	Clearance between carrier and intermediate shaft		0.080—0.126 mm (0.003—0.005 in)	———
	Tapered roller bearing starting torque (preload)	For new bearing	3.9—5.1 N·m (40—52 kgf·cm, 35—45 lbf·in)	Adjust
		For used bearing	3.6—4.8 N·m (37—49 kgf·cm, 32—43 lbf·in)	Adjust
A/T differential pinion gear	Backlash measured at outer edge of final driven gear		1.2—1.8 mm (0.047—0.071 in)	———
	I.D.		18.042—18.066 mm (0.7103—0.7113 in)	———
	Clearance between pinion gear and pinion shaft		0.055—0.095 mm (0.0022—0.0037 in)	0.12 mm (0.005 in)

(cont'd)

Standards and Service Limits

Automatic Transmission and A/T Differential (cont'd)

Item	Measurement	Qualification	Standard or New	Service Limit
Transfer output shaft	Diameter at bearing contact area	Transmission housing side	21.977—21.990 mm (0.8652—0.8657 in)	21.92 mm (0.8630 in)
		Torque converter housing side	40.002—40.018 mm (1.5749—1.5755 in)	39.95 mm (1.5728 in)
	Axial clearance		0—0.39 mm (0—0.015 in)	———
	28.5 mm thrust washer thickness	A	1.82 mm (0.0717 in)	When worn or damaged
		B	1.84 mm (0.0724 in)	When worn or damaged
		C	1.86 mm (0.0732 in)	When worn or damaged
		D	1.88 mm (0.0740 in)	When worn or damaged
		E	1.90 mm (0.0748 in)	When worn or damaged
		F	1.92 mm (0.0756 in)	When worn or damaged
		G	1.94 mm (0.0764 in)	When worn or damaged
		H	1.96 mm (0.0772 in)	When worn or damaged
		I	1.98 mm (0.0780 in)	When worn or damaged
		J	2.00 mm (0.0787 in)	When worn or damaged
		K	2.02 mm (0.0795 in)	When worn or damaged
		L	2.04 mm (0.0803 in)	When worn or damaged
		M	2.06 mm (0.0811 in)	When worn or damaged
		N	2.08 mm (0.0819 in)	When worn or damaged
		O	2.10 mm (0.0827 in)	When worn or damaged
		P	2.12 mm (0.0835 in)	When worn or damaged
		Q	2.14 mm (0.0843 in)	When worn or damaged
		R	2.16 mm (0.0850 in)	When worn or damaged
		S	2.18 mm (0.0858 in)	When worn or damaged
		T	2.20 mm (0.0866 in)	When worn or damaged
		U	2.22 mm (0.0874 in)	When worn or damaged
		V	2.24 mm (0.0882 in)	When worn or damaged
		W	2.26 mm (0.0890 in)	When worn or damaged
		X	2.28 mm (0.0898 in)	When worn or damaged
		Y	2.30 mm (0.0906 in)	When worn or damaged
		Z	2.32 mm (0.0913 in)	When worn or damaged
		AA	2.34 mm (0.0921 in)	When worn or damaged
Transfer assembly fluid	Capacity Hypoid gear oil SAE 90 viscosity, API classified GL4 or GL5 only	Fluid change	0.43 L (0.45 us qt)	
		Overhaul	0.45 L (0.48 us qt)	
Transfer assembly	Diameter of transfer hypoid drive gear/ shaft assembly at tapered roller bearing contact area	Transfer cover side	50.002—50.018 mm (1.9686—1.9692 in)	When worn or damaged
		Transfer gear side	24.987—25.000 mm (0.9837—0.9843 in)	When worn or damaged
	Diameter of transfer output shaft (hypoid gear) at tapered roller bearing contact area	Transfer gear side	40.002—40.018 mm (1.5749—1.5755 in)	When worn or damaged
		Companion flange side	31.975—31.988 mm (1.2589—1.2594 in)	When worn or damaged
	Transfer gear backlash		0.06—0.16 mm (0.002—0.006 in)	Adjust
	Tapered roller bearing total starting torque (preload)		2.64—4.23 N·m (26.9—43.1 kgf·cm, 23.3—37.4 lbf·in)	Adjust

Rear Differential

Item	Measurement	Qualification	Standard or New
Clutch chamber	Capacity	Fluid change	2.66 L (2.81 US qt)
	Use Acura ATF-Z1	Overhaul	3.11 L (3.29 US qt)
Hypoid gear chamber	Capacity	Fluid change	0.73 L (0.77 US qt)
	Use Acura ATF-Z1	Overhaul	0.75 L (0.79 US qt)

Steering

Item	Measurement	Qualification	Standard or New
Steering wheel	Rotational play measured at outside edge		0—10 mm (0—0.39 in)
	Starting load measured at outside edge with engine running		29 N (3.0 kgf, 6.6 lbf)
Gearbox	Angle of rack guide screw loosened from locked position		15±5 °
Pump	Output pressure with shut-off valve closed		9,400—9,800 kPa (96—100 kgf/cm^2, 1,365—1,422 psi)
Power steering fluid	Capacity Use Acura Power Steering Fluid	Reservoir capacity	0.32 L (0.34 US qt)
		System overhaul	1.1 L (1.2 US qt)

Suspension

Item	Measurement	Qualification	Standard or New	Service Limit
Wheel alignment	Camber	Front	−0 °08 ′±30 ′	
		Rear	−1 °15 ′±30 ′	
	Caster	Front	2 °10 ′±30 ′	
	Total toe-in	Front	0±2 mm (0±0.08 in)	
		Rear	2±2 mm (0.08±0.08 in)	
	Front wheel turning angle	Inward	37 °19 ′±2 °	
		Outward (reference)	30 °39 ′	
Wheel	Aluminum wheel runout	Axial	0—0.7 mm (0—0.03 in)	2.0 mm (0.08 in)
		Radial	0—0.7 mm (0—0.03 in)	1.5 mm (0.06 in)
Wheel bearing	End play	Front	0—0.05 mm (0—0.002 in)	
		Rear	0—0.05 mm (0—0.002 in)	

Standards and Service Limits

Brakes

Item	Measurement	Qualification	Standard or New	Service Limit
Parking brake	Distance traveled when pedal pressed with 294 N (30 kgf, 66 lbf) of force		5 to 6 clicks	
	Drum I.D.		189.9—190.1 mm (7.476—7.484 in)	191.0 mm (7.520 in)
	Shoe lining thickness		3.4 mm (0.133 in)	1.0 mm (0.04 in)
Brake pedal	Pedal height (carpet moved aside)		178 mm (7 in)	
	Free play		0.5—2.0 mm (0.02—0.08 in)	
Brake disc	Thickness	Front	27.9—28.1 mm (1.10—1.11 in)	26.0 mm (1.02 in)
		Rear	15.9—16.1 mm (0.625—0.634 in)	14.0 mm (0.55 in)
	Runout	Front and rear	———	0.04 mm (0.0016 in)
	Parallelism	Front and rear	———	0.015 mm (0.0006 in)
Brake pad	Thickness	Front	10.5—11.5 mm (0.41—0.45 in)	1.6 mm (0.06 in)
		Rear	9.5—10.5 mm (0.37—0.41 in)	1.6 mm (0.06 in)

Air Conditioning

Item	Measurement	Qualification	Standard or New
Refrigerant	Type		HFC-134a (R-134a)
	Capacity of system		450—500 g (15.8—17.6 oz)
Refrigerant oil	Type		DENSO ND-OIL 8 (P/N 38897-PR7-A01AH)
	Capacity of components	Condenser (including receiver/dryer)	35 mL (1 1/5 fl·oz)
		Evaporator	45 mL (1 1/2 fl·oz)
		Each line and hose	10 mL (1/3 fl·oz)
		Receiver/Dryer	10 mL (1/3 fl·oz)
		Compressor	127.5—142.5 mL (4 1/3—4 5/6 fl·oz)
Compressor	Field coil resistance	At 68 °F (20 °C)	3.9 —4.3 Ω
	Pulley-to-pressure plate clearance		0.26—0.60 mm (0.010—0.024 in)

Design Specifications

specs

Item	Measurement	Qualification	Specification
DIMENSIONS	Overall length		4,973 mm (195.8 in)
	Overall width		1,847 mm (72.7 in)
	Overall height		1,455 mm (57.3 in)
	Wheelbase		2,800 mm (110.2 in)
	Track	Front	1,576 mm (62.1 in)
		Rear	1,585 mm (62.4 in)
	Seating capacity		Five (5)
WEIGHT	Gross Vehicle Weight Rating (GVWR)		2,290 kg (5,050 lbs)
ENGINE	Type		Water cooled, 4-stroke SOHC VTEC gasoline engine
	Cylinder arrangement		60 °V6-cylinder, transverse
	Bore and stroke		90.0 x 96.0 mm (3.54 x 3.78 in)
	Displacement		3,664 cm^3 (224 cu in)
	Compression ratio		11.2
	Valve train		Belt drive, SOHC VTEC 4 valves per cylinder
	Lubrication system		Forced, wet sump, with trochoid pump
	Fuel required		Premium UNLEADED gasoline with 91 Pump Octane Number or higher
STARTER	Type		Gear reduction
	Normal output		1.8 kW
	Nominal voltage		12 V
	Hour rating		30 seconds
	Direction of rotation		Clockwise as viewed from drive end

(cont'd)

Design Specifications

Item	Measurement	Qualification	Specification
AUTOMATIC TRANSMISSION	Type		Electronically-controlled automatic, five-speed forward, one reverse
	Primary reduction		Direct 1:1
	Gear ratio	1st	2.697
		2nd	1.606
		3rd	1.071
		4th	0.693
		5th	0.490
		Reverse	1.888
	Secondary reduction	Gear ratio	1.238
	Final reduction	Type	Single helical gear
		Gear ratio	4.533
STEERING	Type		Hydraulic power-assisted rack and pinion
	Overall ratio		16.19
	Turns, lock-to-lock		2.98
	Steering wheel diameter		380 mm (15.0 in)
SUSPENSION	Type	Front	Independent double wishbone with stabilizer, coil spring
		Rear	Independent multilink with stabilizer, coil spring
	Shock absorber	Front	Telescopic, hydraulic, nitrogen gas-filled
		Rear	Telescopic, hydraulic, nitrogen gas-filled
TIRES	Size		P245/45R18 96V
	Size of spare tire		T155/70D17 110M
WHEEL ALIGNMENT	Camber	Front	−0 °08 ′
		Rear	−1 °15 ′
	Caster	Front	2 °10 ′
	Total toe-in	Front	0 mm (0 in)
		Rear	2 mm (0.08 in)
	Front wheel turning angle	Inward	37 °19 ′
		Outward (reference)	30 °39 ′
BRAKES	Type of service brake	Front	Power-assisted self-adjusting ventilated disc
		Rear	Power-assisted self-adjusting ventilated disc
	Type of parking brake		Mechanical actuating, rear wheels
	Pad friction surface area	Front	55.2 cm^2 (9.02 sq in) x 2
		Rear	27.9 cm^2 (4.33 sq in) x 2
	Parking brake shoe friction surface area		45.6 cm^2 (7.07 sq in)
AIR CONDITIONING	Compressor	Type	Piston
		Capacity	171 mL (10.4 cu in)/rev
		Maximum speed	7,600 rpm
		Lubricant capacity	127.5 mL (4 1/3 fl·oz)
		Lubricant type	DENSO ND-OIL 8
	Condenser	Type	Corrugated fin
	Evaporator	Type	Corrugated fin
	Blower	Type	Radial
		Motor type	254 W/12 V
		Speed control	Infinitely variable
		Maximum capacity	550 m^3 (19,420 cu ft)/h
	Temperature control		Air-mix type
	Compressor clutch	Type	Dry, single plate, poly V-belt drive
		Electrical power consumption at 68 °F (20 °C)	35 W maximum at 12 V
	Refrigerant	Type	HFC-134a (R-134a)
		Capacity	450—500 g (15.8—17.6 oz)

Item	Measurement	Qualification	Specification
ELECTRICAL RATINGS	Battery		12 V—72 Ah/20 HR (12V—55 Ah/5 HR)
	Fuses	Battery terminal fuse box	50 A
		Under-hood fuse/relay box	120 A, 50 A, 40 A, 30 A, 20 A, 15 A, 10 A, 7.5 A
		Driver's under-dash fuse/relay box	30 A, 20 A, 15 A, 10 A, 7.5 A
		Passenger's under-dash fuse/relay box	30 A, 20 A, 7.5 A
		Auxiliary under-dash fuse/relay box	7.5 A
	Light bulbs	Headlight high beam	12 V—60 W (HB3)
		Headlight low beam (HID)	12 V—35 W (D2S)
		Fog lights	12 V—35 W (H11)
		Front turn signal lights	12 V—24 CP (Amber)
		Side turn signal lights	LED
		Front parking/ Front side marker lights	12 V—1.5 CP
		Rear turn signal lights	12 V—21 W (Amber)
		Rear side marker/brake/ taillights	LED
		High mount brake light	LED
		Back-up lights	12 V—21 W
		License plate lights	12 V—5 W
		Ambient light	LED
		Map lights	12 V—8 W
		Trunk light	12 V—5 W
		Door courtesy lights	12 V—2 CP
		Glove box light	12 V—1.4 W
		Vanity mirror lights	12 V—2 W
		Gauge lights	LED
		Indicator lights	LED
		Console box light	12 V—1.4 W
		Footwell lights	LED
		Door pocket lights	LED
		Door outer handle lights	LED
		Door inner handle lights	LED
		Ashtray lights	LED
	Washer reservoir	Capacity (USA models)	2.5 L (2.6 US qt)
		Capacity (Canada models)	6.5 L (6.9 US qt)

Body Specifications

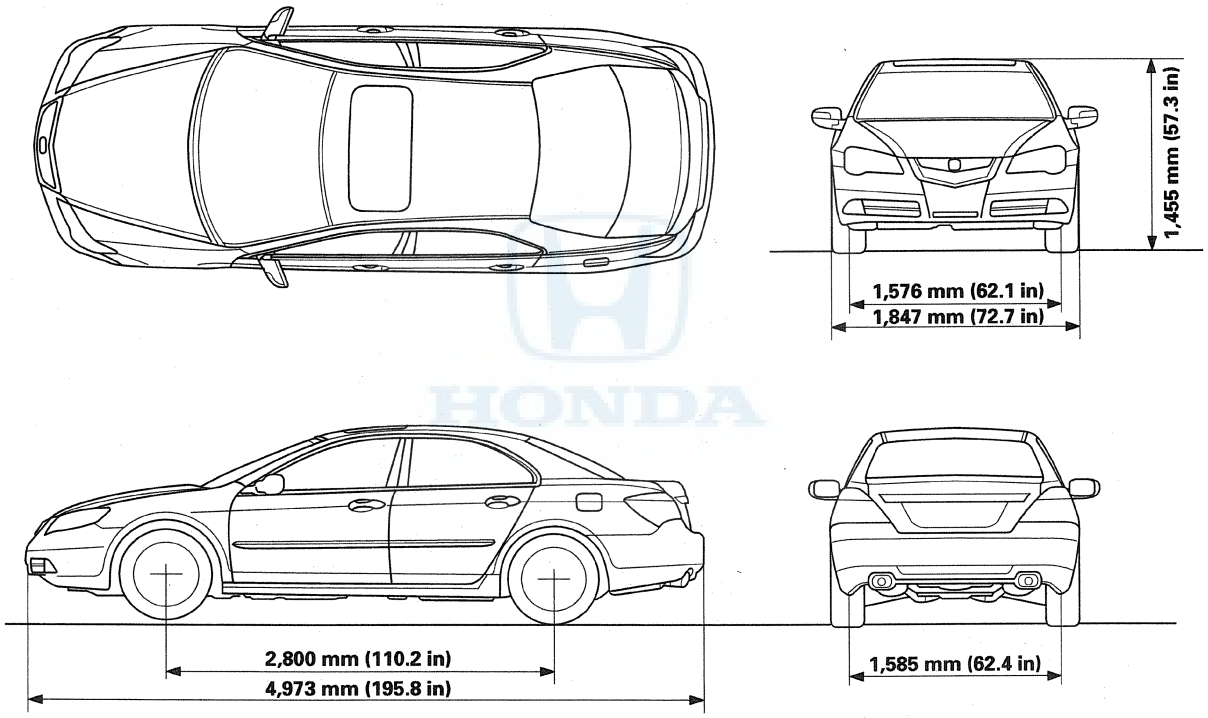

Maintenance

Lubricants and Fluids **3-2**

Maintenance Minder
General Information 3-4
Maintenance Main Items 3-8
Maintenance Sub Items 3-9

Lubricants and Fluids

For details of the lubrication points and the type of lubricants to be applied, refer to the illustrated index and the various work procedures (such as Assembly/Reassembly, Replacement, Overhaul, Installation, etc.) contained in each section.

Item	Lubrication Points	Lubricant
A	Engine	Acura Motor Oil: American Honda P/N 08798-9023A (5W-20), Honda Canada P/N CA66808 (5W-20) Look for the API certification seal on the oil container. Make sure it says "For Gasoline Engines." SAE viscosity: See chart.
B	Automatic transmission	Acura Automatic Transmission Fluid (ATF-Z1): American Honda P/N 08200-9001A, Honda Canada P/N CA66704 Always use Acura ATF-Z1. Using a non-Acura ATF can affect shift quality.
C	Transfer assembly	Hypoid gear oil GL4 or GL5 Use a SAE 90 viscosity hypoid gear oil, API classified GL4 or GL5 only. Viscosity SAE 90: above 0 °F (−18 °C)
D	Rear differential	Acura Automatic Transmission Fluid (ATF-Z1): American Honda P/N 08200-9001A, Honda Canada P/N CA66704
E	Brake system (including VSA lines)	Acura DOT 3 Brake Fluid: P/N 08798-9008A Always use Acura DOT 3 Brake Fluid. Using a non-Acura brake fluid can cause corrosion and decrease the life of the system.
F G H I J	Brake booster clevis pin Battery terminals Fuel fill door Hood hinges and hood latch Trunk hinges	Multipurpose grease
K	Caliper piston boots, piston seals, caliper pins, and pin boots	Honda Silicone Grease: P/N 08C30-B0234M
L	Power steering system	Acura Power Steering Fluid American Honda P/N 08206-9002A Honda Canada P/N 08206-9004C Always use Acura Power Steering Fluid. Using any other type of power steering fluid or automatic transmission fluid can cause increased wear and poor steering in cold weather.
M	Air conditioning compressor	Compressor oil: DENSO ND-OIL 8 (P/N 38897-PR7-A01AH) for refrigerant HFC-134a (R-134a)
N	Cooling system	Acura Long Life Antifreeze/Coolant-Type2: P/N OL999-9011A

API CERTIFICATION SEAL



Recommended Engine Oil
Engine oil viscosity for ambient temperature ranges

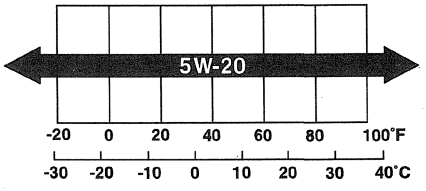

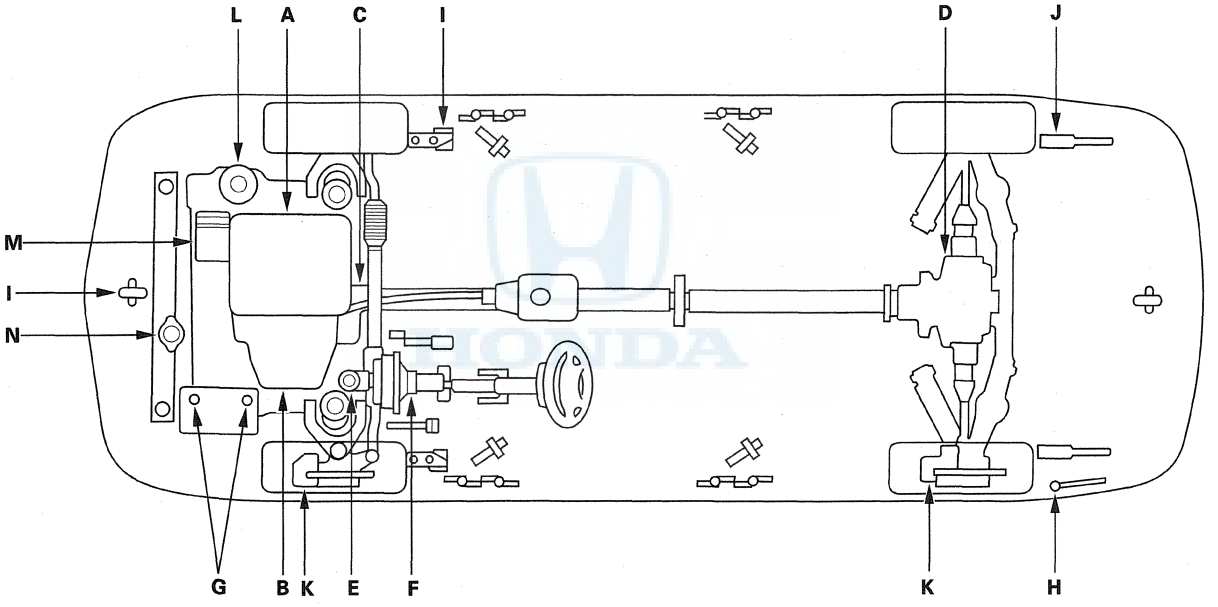
L
A
C
I
D
J
M
I
N
G
B
K
E
F
K
H

Maintenance Minder

General Information

Multi-information Display

The maintenance minder is an important feature of the multi-information display. Based on engine operating conditions, the RL's onboard computer (PCM) calculates the remaining engine oil life. The system also displays the remaining engine oil life along with the code(s) for other scheduled maintenance items needing service.

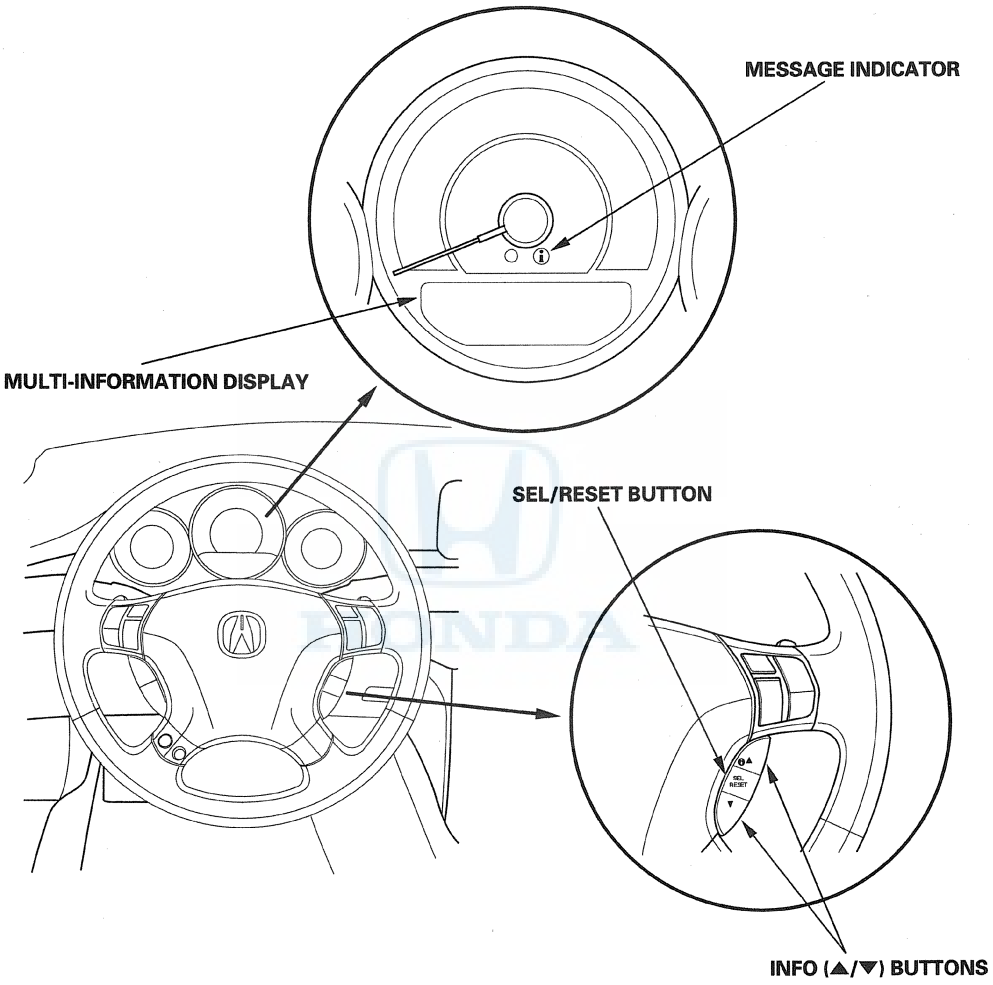

Service Information

1. The remaining engine oil life (A) is shown as a percentage in the multi-information display. To see the current engine oil life, turn the ignition switch to ON (II), then push and release the SEL/RESET button repeatedly until the engine oil life displays.

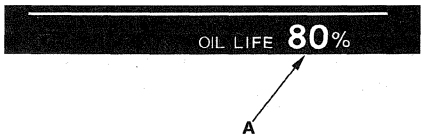

2. When the ignition switch is ON (II), and the remaining engine oil life is 15 % to 6 %, the remaining engine oil life and other scheduled maintenance item(s) needing service are displayed. The maintenance system message "SERVICE DUE SOON" (A) also come on. To cancel the message, press the INFO button. The display continues to show the remaining engine oil life (B) and the message indicator (C) until it is reset.

   - Complete list of maintenance main items (D) (see page 3-8).
   - Complete list of maintenance sub items (E) (see page 3-9).

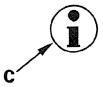



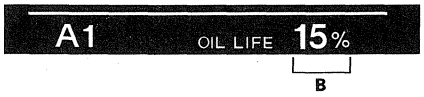

3. When the ignition switch is ON (II), and the remaining engine oil life is 5 % to 1 %, the maintenance system message "SERVICE DUE NOW" is displayed along with the same maintenance item code(s). If the maintenance system message display is canceled, a "SERVICE" message appears.



4. When the ignition switch is ON (II), and the remaining engine oil life is 0 %, the maintenance system message "SERVICE PAST DUE" is displayed along with the same maintenance item code(s).



(cont'd)

General Information (cont'd)

5. If the indicated maintenance is not done, the "SERVICE PAST DUE" message shows a negative mileage, for example "—10," on the display. If the negative mileage is between 0 and —9, the message is displayed for only a few seconds when the ignition switch is ON (II). The negative mileage (A) remains displayed after the vehicle is driven more than 10 miles (for USA models) or 10 km (for Canada models) after 0 % oil life is reached, and the display cannot be canceled. This means the indicated maintenance item(s) should have been done more than 10 miles (or 10 km) ago.



Resetting the Maintenance-Information Display

NOTE:
- The vehicle must be stopped to reset the display.
- If a required service is done and the display is not reset, or if the maintenance display is reset without doing the service, the system will not show the proper maintenance timing. This can lead to serious mechanical problems because there will be no accurate record of when the required maintenance is needed.
- The engine oil life and the maintenance items can be reset independently only with the HDS.

1. Turn the ignition switch to ON (II).
2. If system message(s) are displayed, press the INFO button to cancel the display.
3. Push and release the SEL/RESET button repeatedly until the engine oil life indicator is displayed.

4. Press and hold the SEL/RESET button for about 10 seconds, the "OIL LIFE RESET" mode display appears.

   NOTE:
   - If you are resetting the display when the engine oil life is more than 15 %, make sure any maintenance item(s) requiring service are done before resetting the display.
   - To cancel the "OIL LIFE RESET" mode, press the INFO button repeatedly until the "CANCEL" indicator displayed, then press the SEL/RESET button.



5. Press Info button repeatedly until the "RESET" indicator is displayed, then press the SEL/RESET button.
   The maintenance item code(s) will disappear, and the engine oil life will reset to"100".



Resetting Individual Maintenance Item

1. Connect the Honda Diagnostic System (HDS) to the data link connector (DLC) (see step 2 on page 11-3).
2. Turn the ignition switch to ON (II).
3. Make sure the HDS communicates with the vehicle and the powertrain control module (PCM). If it doesn't communicate, troubleshoot the DLC circuit (see page 11-211).
4. Select BODY ELECTRICAL with the HDS.
5. Select ADJUSTMENT in the GAUGE MENU with the HDS.
6. Select RESET in the MAINTENANCE MINDER with the HDS.
7. Select the individual maintenance item you wish to reset.

Maintenance Minder

Maintenance Main Items

If the message "SERVICE DUE NOW" does not appear more than 12 months after the display is reset, change the engine oil every year.

NOTE:
- Independent of the maintenance messages in the multi-information display, replace the brake fluid every 3 years.
- Inspect idle speed every 160,000 miles (256,000 km).
- Adjust the valves during services A, B, 1, 2 or 3 only if they are noisy.

Symbol	Maintenance Main Items
A	Replace engine oil (see page 8-11) Engine oil capacity without oil filter: 4.0 L (4.2 US qt).
B	Replace engine oil and oil filter (see page 8-12) Engine oil capacity with oil filter: 4.3 L (4.5 US qt).
	Check front and rear brakes (see page 19-3) • Check pads and discs for wear (thickness), damage, and cracks. • Check calipers for damage, leaks, and tightness of mounting bolts.
	Check parking brake adjustment (see page 19-7) Number of clicks (5 to 6) when the parking brake pedal is pressed with 294 N (30 kgf, 66 lbf) of force.
	Inspect tie-rod ends, steering gearbox, and gearbox boots (see page 17-9) • Check steering linkage. • Check boots for damage and leaking grease. • Check fluid lines for damage or leaks.
	Inspect suspension components (see page 18-3) • Check bolts for tightness. • Check condition of ball joint boots for deterioration and damage.
	Inspect driveshaft boots (see page 16-4) Check boots for cracks and boot bands for tightness.
	Inspect brake hoses and lines including VSA lines (see page 19-38) Check the master cylinder and VSA modulator-control unit for damage and leakage.
	Inspect all fluid levels and condition of fluids • Engine coolant (see page 10-6) • Automatic transmission fluid (ATF-Z1) (see page 14-195) • Rear differential fluid (see page 15-96) • Power steering fluid (see page 17-13) • Brake fluid (see page 19-9) • Windshield washer fluid
	Inspect exhaust system (see page 9-8)* Check catalytic converter heat shields, exhaust pipes, and muffler for damage, leaks, and tightness.
	Inspect fuel lines (see page 11-338)*, and connections (see page 11-340)* Check for loose connections, cracks, and deterioration; retighten loose connections and replace damaged parts.

NOTE: According to state and federal regulations, failure to do the maintenance items marked with an asterisk (*) will not void the client's emissions warranties. However, Acura recommends that all maintenance services be done at the recommended interval, to ensure long-term reliability.

Maintenance Sub Items

Number	Maintenance Sub Items
1	Rotate tires, and check tire inflation and condition. Follow the pattern shown in the Owner's Manual.
2	Replace air cleaner element (see page 11-367) If the vehicle is driven primarily in dusty conditions, replace every 15,000 miles (24,000 km).
	Replace dust and pollen filter (see page 21-85) • If the vehicle is driven primarily in areas that have high concentrations of dust, pollen, or soot in the air, replace every 15,000 miles (24,000 km). • Replace the filter whenever airflow from the heating and air conditioning system is less than normal.
	Inspect drive belt (see page 4-33) Look for cracks and damage, and inspect auto-tensioner; no adjustment is needed.
3	Replace automatic transmission fluid (see page 14-196) and transfer fluid (see page 14-197) • Driving in mountainous areas at very low vehicle speeds or trailer towing results in higher transmission and transfer temperatures. This requires transmission and transfer fluid changes more frequently than recommended by the maintenance minder. If the vehicle is regularly driven in these conditions, replace the transmission and transfer fluid at 60,000 miles (96,000 km), then every 30,000 miles (48,000 km). • Automatic transmission fluid capacity: 2.8 L (3.0 US qt), use Acura Automatic Transmission Fluid (ATF-Z1). • Transfer fluid capacity: 0.43 L (0.45 US qt), use hypoid gear oil GL4 or GL5.
4	Replace spark plugs (see page 4-24) Use IZKR7B-11S (NGK) or SXU22HCR11S (DENSO).
	Replace timing belt (see page 6-22) and inspect water pump (see page 10-5) If the vehicle is regularly driven in very high temperatures (over 110 °F, 43 °C), or in very low temperatures (under −20 °F, −29 °C), replace every 60,000 miles (USA)/100,000 km (Canada).
	Inspect the valve clearance (cold) (see page 6-10) Intake: 0.20—0.24 mm (0.008—0.009 in), Exhaust: 0.28—0.32 mm (0.011—0.013 in)
5	Replace engine coolant (see page 10-6) Capacity (including the reservoir): 6.0 L (1.59 US gal), use Acura Long Life Antifreeze/Coolant Type 2.
6	Replace rear differential fluid (see page 15-96) • Driving in mountainous areas at very low vehicle speeds or trailer towing results in higher level of mechanical (shear) stress to fluid. This requires differential fluid changes more frequently than recommended by the maintenance minder. If the vehicle is regularly driven in these conditions, have the differential fluid changed at 7,500 miles (12,000 km), then every 15,000 miles (24,000 km). • Capacity Clutch chambers: 2.66 L (2.8 US qt), Hypoid gear chamber: 0.73 L (0.77 US qt), use Acura Automatic Transmission Fluid (ATF-Z1).

SUPPLEMENTAL RESTRAINT SYSTEM (SRS) (If engine electrical maintenance is required)

The Acura RL SRS includes a driver's airbag in the steering wheel hub, a passenger's airbag in the dashboard above the glove box, seat belt tensioners in the front seat belt retractors, side curtain airbags in the sides of the roof, and side airbags in the front seat-backs. Information necessary to safely service the SRS is included in this Service Manual. Items marked with an asterisk (*) on the contents page include or are located near SRS components. Servicing, disassembling, or replacing these items require special precautions and tools, and should be done by an authorized Acura dealer.

- To avoid rendering the SRS inoperative, which could lead to personal injury or death in the event of a severe frontal or side collision, all SRS service work should be done by an authorized Acura dealer.
- Improper service procedures, including incorrect removal and installation of the SRS, could lead to personal injury caused by unintentional deployment of the airbags, side airbags, and/or side curtain airbags.
- Do not bump or impact the SRS unit, front impact sensors, side impact sensors, or rear safing sensor, especially when the ignition switch is in ON (II), or for at least 3 minutes after the ignition switch is turned to LOCK (0); otherwise, the system may fail in a collision, or the airbags may deploy.
- SRS electrical connectors are identified by yellow color coding. Related components are located in the steering column, center console, dashboard, driver's dashboard lower cover, in the dashboard above the glove box, in the front seats, in the roof side, and around the floor. Do not use electrical test equipment on these circuits.

HONDA

Engine Electrical

Engine Electrical
Special Tools 4-2

Starting System
Component Location Index 4-3
Symptom Troubleshooting Index 4-4
Circuit Diagram 4-5
Starter System Circuit Troubleshooting 4-6
Starter Solenoid Test 4-8
Starter Performance Test 4-9
Starter Removal and Installation 4-10
Starter Overhaul 4-12

Ignition System
Component Location Index 4-18
Circuit Diagram 4-19
Ignition Timing Inspection 4-20
Ignition Coil Removal/Installation 4-21
Ignition Coil Relay Circuit Troubleshooting 4-22
Spark Plug Inspection 4-24

Charging System
Component Location Index 4-25
Symptom Troubleshooting Index 4-26
Circuit Diagram 4-27
Charging System Indicator Circuit Troubleshooting 4-28
Alternator and Regulator Circuit Troubleshooting 4-30
Alternator Control Circuit Troubleshooting 4-31
Drive Belt Inspection 4-33
Drive Belt Replacement 4-33
Drive Belt Auto-tensioner Inspection 4-34
Drive Belt Auto-tensioner Replacement 4-35
Tensioner Pulley Replacement 4-35
Alternator Removal and Installation 4-36
Alternator Overhaul 4-39

Cruise Control
Component Location Index 4-43
Symptom Troubleshooting Index 4-44
Circuit Diagram 4-45
Cruise Control Input Test 4-46
* Cruise Control Combination Switch Test/Replacement 4-48

Engine Mount Control System
Component Location Index 4-49
Circuit Diagram 4-50
Troubleshooting 4-51

Special Tools

Ref. No.	Tool Number	Description	Qty
①	07746-0010300	Attachment, 42 x 47 mm	1
②	07749-0010000	Driver Handle, 15 x 135L	1

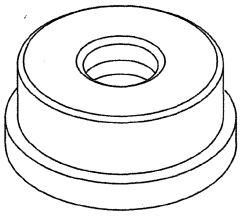

①

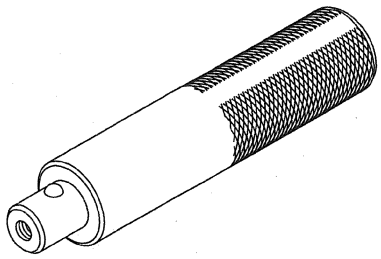

②

Component Location Index

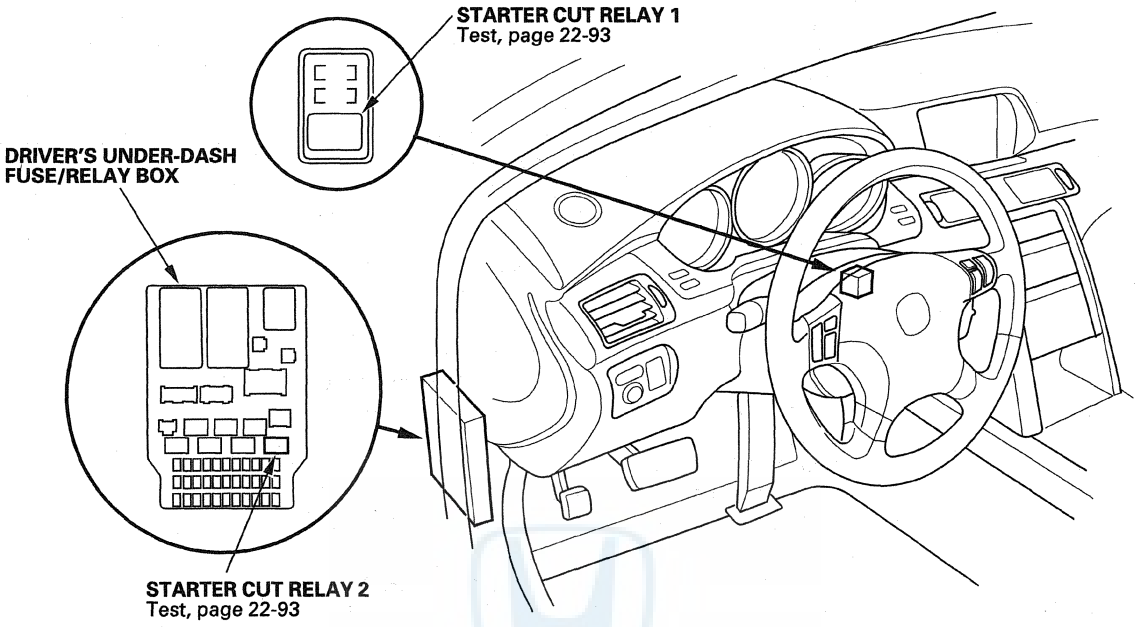

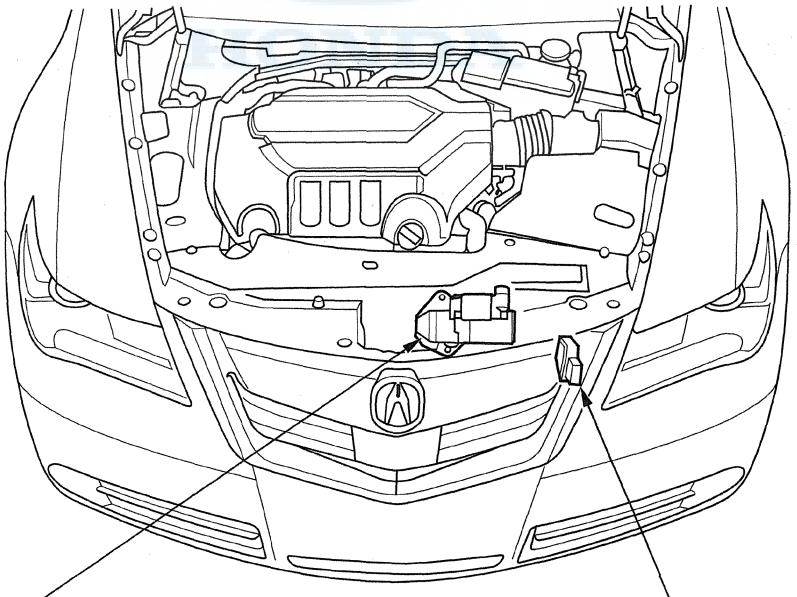

STARTER
Starter System Circuit Troubleshooting, page 4-6
Performance Test, page 4-9
Removal and Installation, page 4-10
Overhaul, page 4-12

TRANSMISSION RANGE SWITCH
Test, page 14-244
Replacement, page 14-245

Starting System

Symptom Troubleshooting Index

Symptom	Diagnostic procedure	Also check for
Engine does not start (does not crank)	1. Check for loose battery terminals or connections. 2. Test the battery for a low state of charge (see page 22-90). 3. Check the starter (see page 4-6). 4. Check the starter cut relay 1 and starter cut relay 2 (see page 22-93). 5. Check the transmission range switch (see page 14-244). 6. Check the ignition switch or wire (see page 22-100).	Poor ground at G101, G102
Engine cranks, but does not start	1. Check for PGM-FI DTCs (see page 11-3). 2. Check the fuel pressure (see page 11-335). 3. Check for a plugged or damaged fuel line (see page 11-338). 4. Check for a plugged fuel filter (see page 11-348). 5. Check the throttle body (see page 11-365). 6. Check for low engine compression (see page 6-7). 7. Check for a damaged or broken timing belt. 8. Do the powertrain control module (PCM) reset function with the Honda Diagnostic System (HDS) to cancel the ALL INJECTORS STOP function.	
Engine is hard to start	1. Check for PGM-FI DTCs (see page 11-3). 2. Check the fuel pressure (see page 11-335). 3. Check for a plugged or damaged fuel line (see page 11-338). 4. Check for a plugged fuel filter (see page 11-348).	
Engine cranks slowly	1. Check for loose battery terminals or connections. 2. Test the battery for a low state of charge (see page 22-90). 3. Check the starter for binding (see page 4-12). 4. Check for excessive drag in the engine.	
Multi-information display warning CHECK STARTING SYSTEM	Check for PGM-FI DTCs (see page 11-3).	

Circuit Diagram

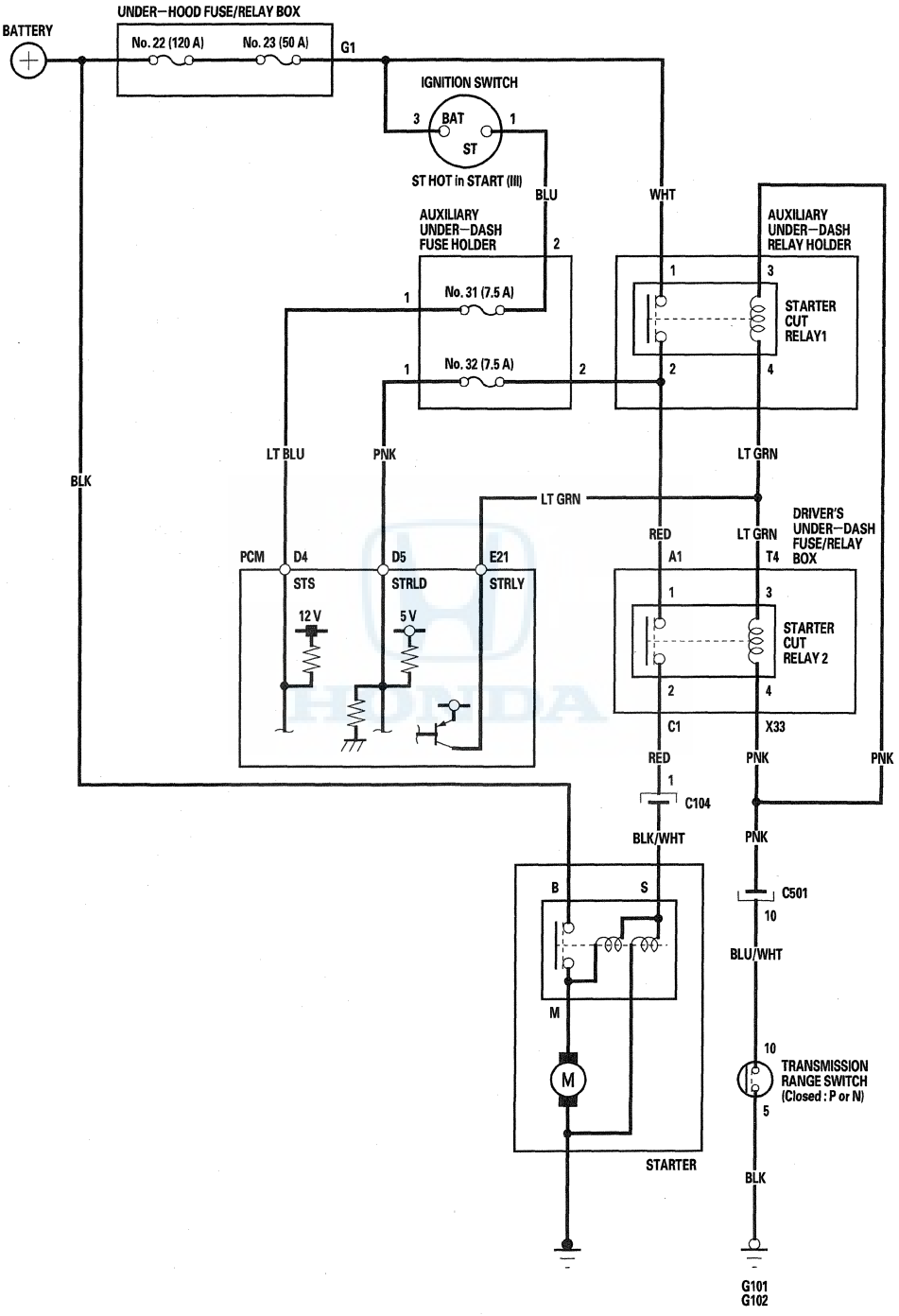

Starter System Circuit Troubleshooting

Special Tools Required
Alternator, Regulator, Battery & Starter tester OTC3131
Available through the Acura Tool and Equipment Program 888-424-6857

NOTE:
- Air temperature must be within 59—100 °F (15—38 °C) during this procedure.
- After the inspection, you must reset the powertrain control module (PCM). Otherwise, the PCM will continue to stop the fuel injectors from operating.
- The battery must be in good condition, and fully charged.

1. Connect the alternator, regulator, battery & starter tester (OTC3131) to the battery as shown.

   NOTE: The probe is not used for battery testing.

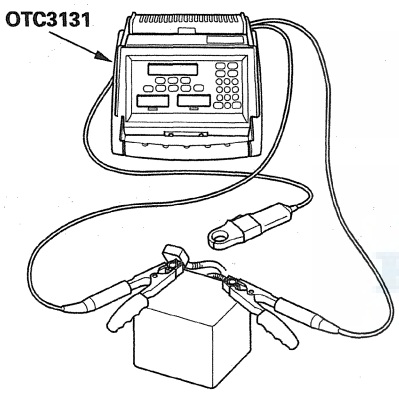

2. Do the BATTERY TEST.

   Does the display indicate GOOD or LOW CHARGE?

   YES—The battery is OK. Go to step 3.

   NO—If the tester indicates BAD BATTERY, replace the battery, then retest. If the tester indicates CHARGE & RETEST, charge the battery, then retest.

3. Connect the Honda Diagnostic System (HDS) to the data link connector (DLC) (see step 2 on page 11-3).

4. Turn the ignition switch to ON (II).

5. Make sure the HDS communicates with the vehicle and the PCM. If it doesn't communicate, troubleshoot the DLC circuit (see page 11-211).

6. Select PGM-FI, INSPECTION, then ALL INJECTORS STOP on the HDS.

7. Set the parking brake, then with the shift lever in N or P, turn the ignition switch to START (III).

   Does the starter crank the engine normally?

   YES—The starting system is OK. Go to step 15.

   NO—Go to step 8.

8. Turn the ignition switch to LOCK (0).

9. Check the electrical connections at the battery, the negative battery cable to the body, the engine ground cables, and the starter for looseness and corrosion. Then try cranking the engine again.

   Does the starter crank the engine normally?

   YES—Repairing the loose connection corrected the problem. The starting system is OK. Go to step 15.

   NO—Based on the following symptoms, take the appropriate action:

   - If the starter will not crank the engine at all, go to step 10.
   - If the starter cranks the engine erratically or too slowly, go to step 12.
   - If the starter will not disengage from the torque converter ring gear when you release the key, replace the starter, or remove and disassemble it, and check for the following: ■
     – Starter solenoid and switch malfunction.
     – Dirty drive gear or damaged overrunning clutch.

10. Make sure the shift lever is in N or P, then disconnect the BLK/WHT wire (A) from the starter S terminal. Connect a jumper wire from the battery positive terminal to the S terminal.

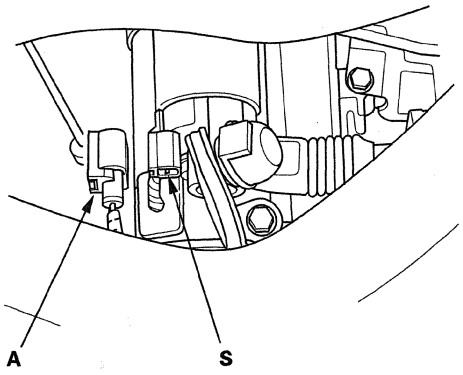

Does the starter crank the engine?

YES—Go to step 11.

NO—Remove the starter, then repair or replace (see page 4-10) it as necessary. ■

11. Check the following items in the order listed until you find the open or high resistance in the circuit:

- The WHT wire and connectors between the auxiliary under-dash fuse/relay holder and the under-hood fuse/relay box.
- The RED wire and connectors between the driver's under-dash fuse/relay box and the auxiliary under-dash relay holder.
- The RED wire, BLK/WHT wire, and connectors between the driver's under-dash fuse/relay box and the starter.
- The ignition switch (see page 22-100).
- The transmission range switch and connector (see page 14-244).
- Starter cut relay 1 and the starter cut relay 2 (see page 22-93).

Are these items OK?

YES—Go to step 12.

NO—Repair or replace it, then go to step 12.

12. Connect alternator, regulator, battery & starter tester (OTC3131) to the battery.

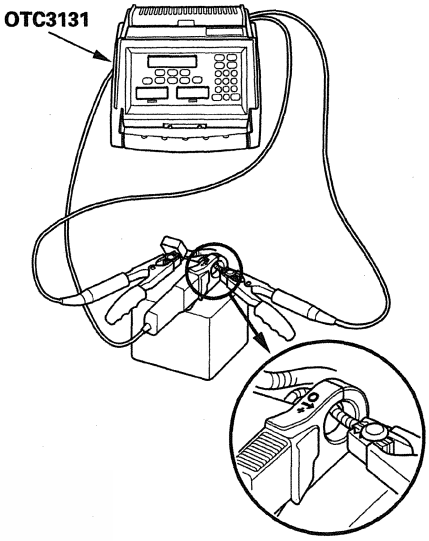

13. Do the STARTING TEST.

Does the display indicate cranking voltage greater than or equal to 8.0 V and is the current draw less than or equal to 375 A?

YES—Go to step 14.

NO—Replace the starter, or remove and disassemble it, and check for these problems: ■

- Drag in the starter armature
- Short in the armature winding
- Excessive drag in the engine
- Open circuit in starter armature commutator segments
- Excessively worn starter brushes
- Open circuit in the starter brushes
- Dirty or damaged helical splines or drive gear
- Faulty over running clutch

14. Remove the starter, and inspect its drive gear and the torque converter ring gear for damage. Replace any damaged parts.

15. Select PCM reset (see page 11-4) to cancel the ALL INJECTORS STOP on the HDS.

Starter Solenoid Test

1. Do the battery terminal disconnection procedure (see page 22-91).

2. Remove the harness clamp (A), starter cable (B), and the motor cable (C), and disconnect BLK/WHT wire connector (D).

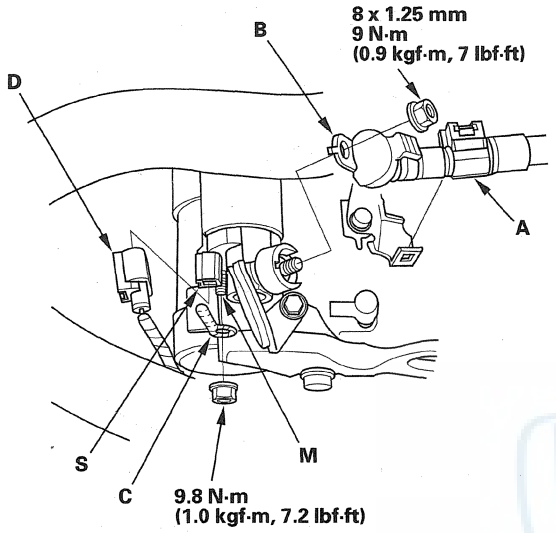

3. Check the hold-in coil for continuity between the S terminal and the armature housing (ground). There should be continuity.

   - If there is continuity, go to step 4.
   - If there is no continuity, replace the solenoid.

4. Check the pull-in coil for continuity between the S terminal and the M terminal. There should be continuity.

   - If there is continuity, the solenoid is OK.
   - If there is no continuity, replace the solenoid.

5. Install wire and the connector in the reverse order of removal.

6. Do the battery terminal reconnection procedure (see page 22-91).

Starter Performance Test

1. Remove the starter (see page 4-10).
2. Clamp the starter firmly in a vise.
3. Disconnect the wire from the M terminal.
4. Make the connections for this test using the thickest (gauge) wire possible (preferably the same gauge as used on the vehicle).

   NOTE: To avoid damaging the starter, never leave the battery connected for more than 10 seconds.

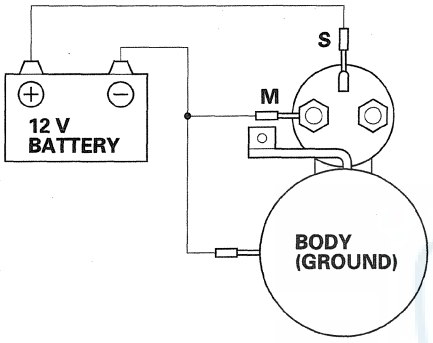

5. Connect the battery as shown. Make sure you disconnect the starter motor wire from the M terminal. If the starter pinion moves out, it is working properly.
6. Disconnect the battery from the M terminal. If the pinion does not retract, the hold-in coil of the solenoid is working properly.

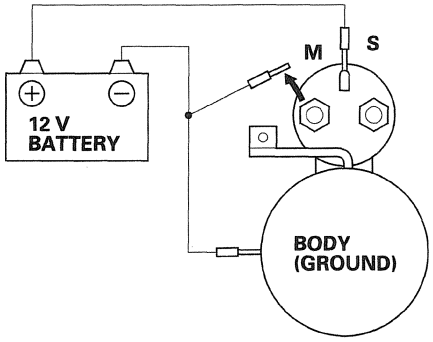

7. Disconnect the battery from the starter body. If the pinion retracts immediately, it is working properly.

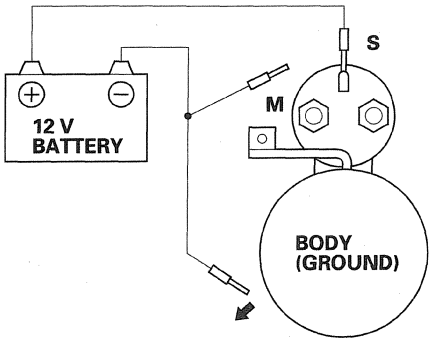

8. Reconnect the wire to the M terminal.
9. Connect the starter to the battery as shown, and confirm that the motor runs.

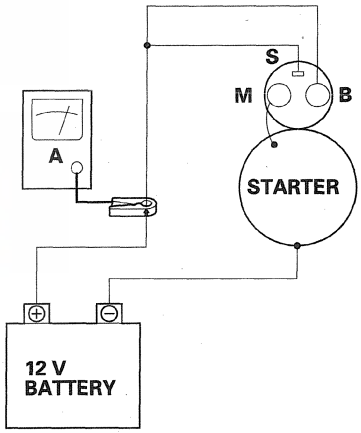

10. If the electric current meets the specification when the battery voltage is at 11.5 V, the starter is working properly.

Specification
Electric Current: 90 A or less

Starter Removal and Installation

Removal

1. Do the battery terminal disconnection procedure (see page 22-91).

2. Remove the engine cover.

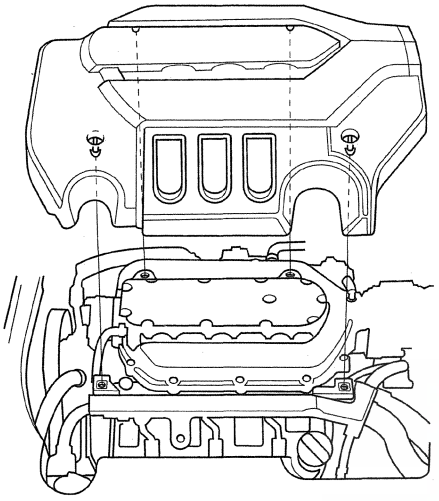

3. Remove the vacuum hose (A), transmission dipstick (B), and vacuum line mounting bolt (C).

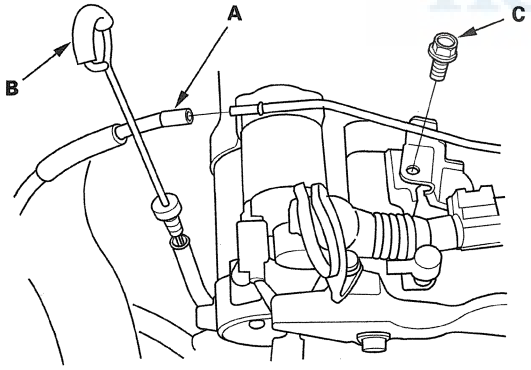

4. Remove the harness clamp (A).

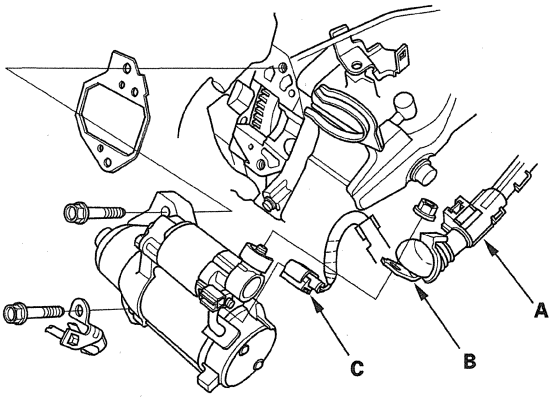

5. Disconnect the starter cable (B) from the B terminal, then disconnect the BLK/WHT wire (C) from the S terminal.

6. Remove the two bolts holding the starter, then remove the starter.

Installation

1. Install the starter (A) using a new gasket (B), then install the harness clamp (C), and connect the B terminal (D) and BLK/WHT wire (E). Make sure the crimped side of the B terminal faces away from the starter when you connect it.

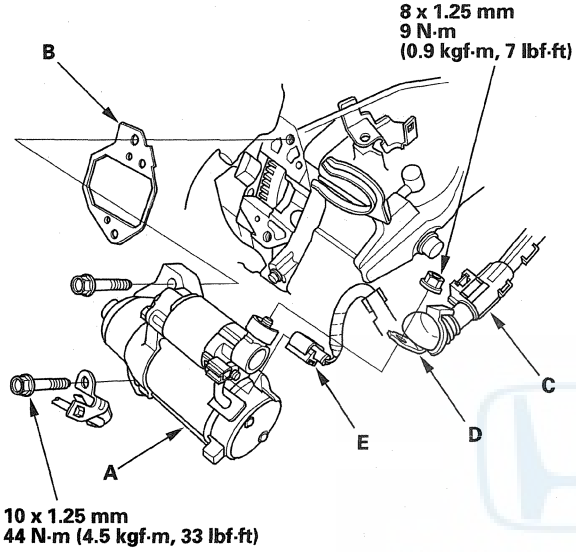

2. Install the vacuum hose (A), transmission dipstick (B), and vacuum line mounting bolt (C).

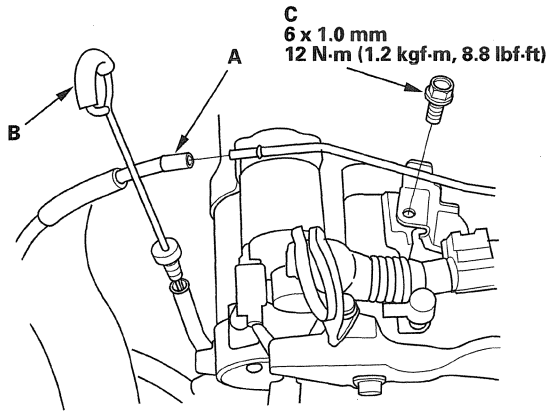

3. Install the engine cover.

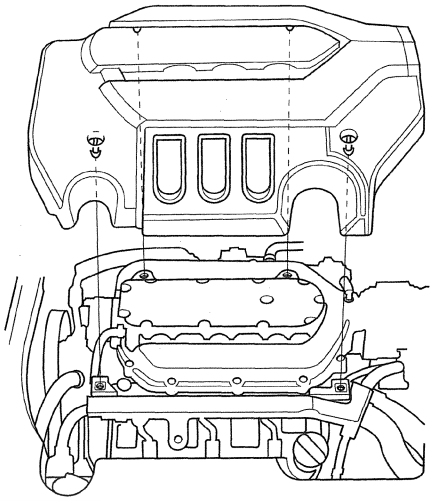

4. Do the battery terminal reconnection procedure (see page 22-91).

5. Start the engine to make sure the starter works properly.

Starter Overhaul

Disassembly/Reassembly

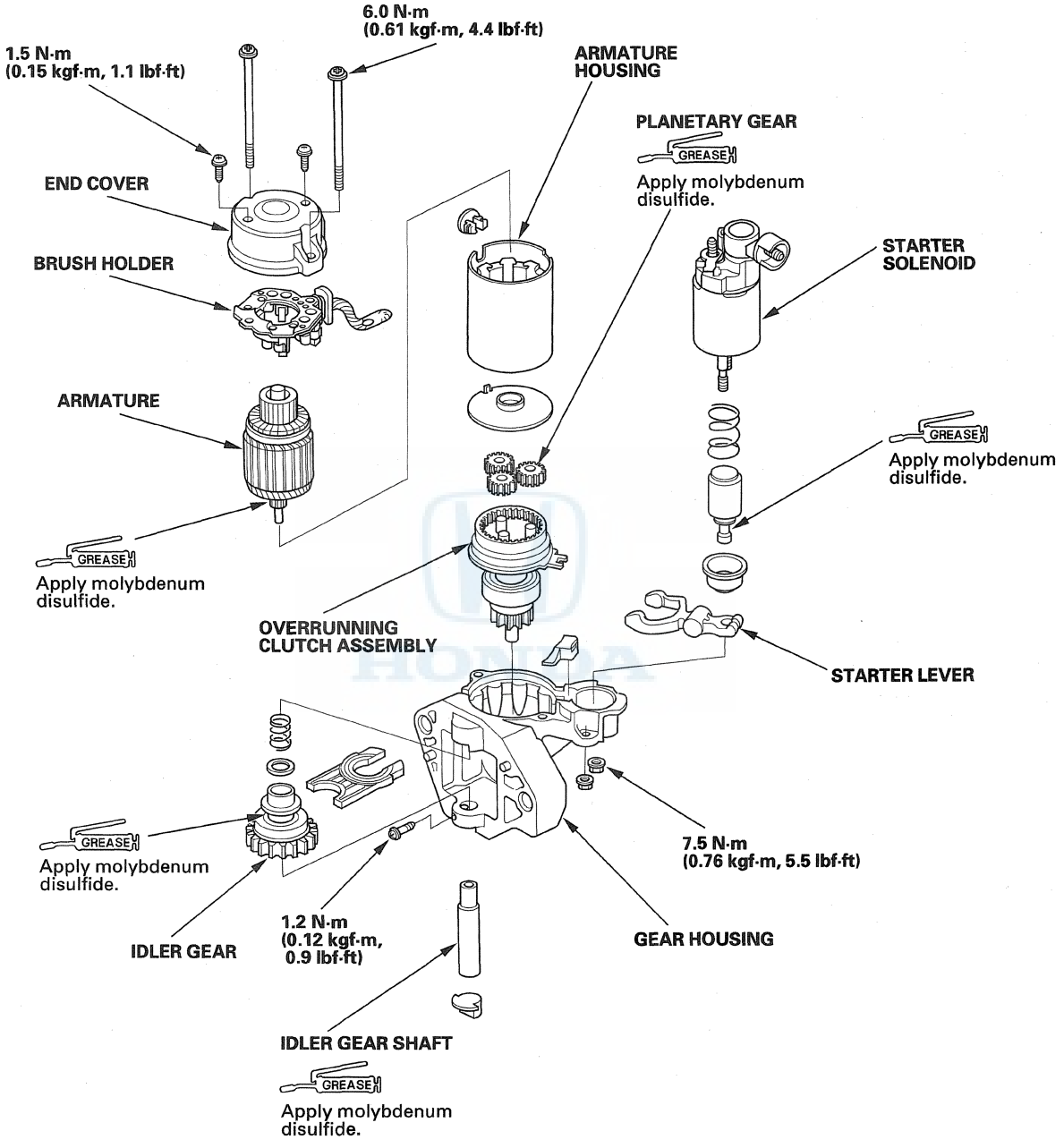

Armature Inspection and Test

1. Remove the starter (see page 4-10).

2. Disassemble the starter as shown in the Exploded View.

3. Inspect the armature for wear or damage from contact with the permanent magnet. If there is wear or damage, replace the armature.

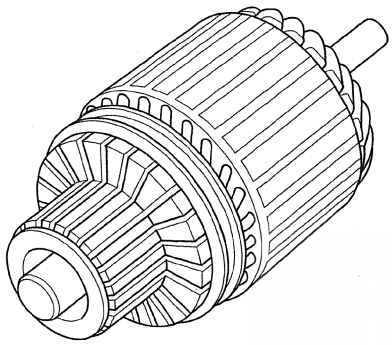

4. Check the commutator (A) surface. If the surface is dirty or burnt, resurface it with an emery cloth or a lathe to the specifications in step 5, or recondition with #500 or #600 sandpaper (B).

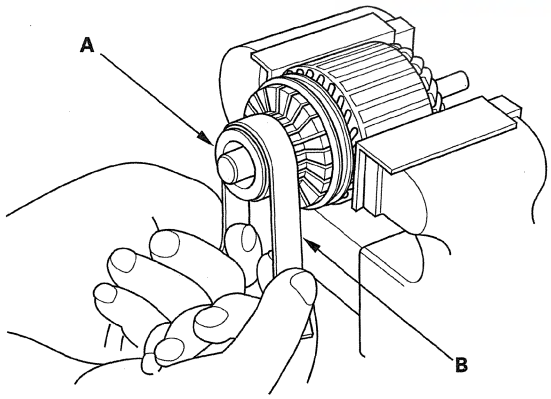

5. Check the commutator diameter. If the diameter is below the service limit, replace the armature.

Commutator Diameter
Standard (New): 28.9—29.0 mm (1.138—1.142 in)
Service Limit: 28.0 mm (0.711 in)

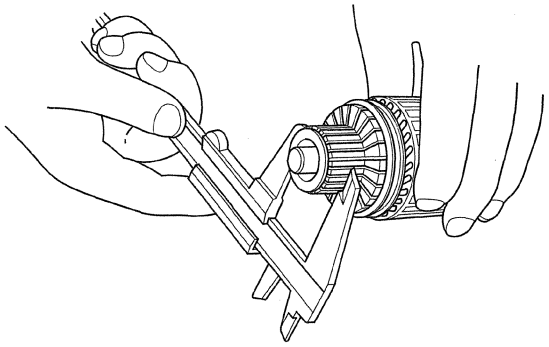

6. Measure the commutator (A) runout.

- If the commutator runout is within the service limit, check the commutator for carbon dust or brass chips between the segments.
- If the commutator runout is not within the service limit, replace the armature.

Commutator Runout
Standard (New): 0.02 mm (0.0008 in) max.
Service Limit: 0.05 mm (0.002 in)

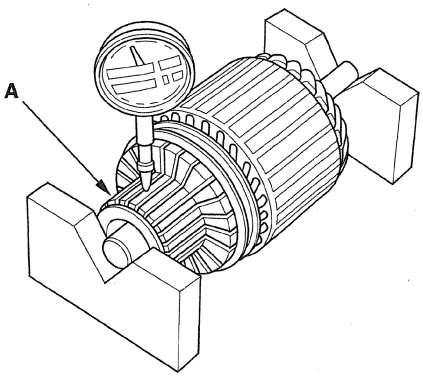

(cont'd)

Starter Overhaul (cont'd)

7. Use a digital caliper or dial caliper to check the mica depth (A). If the mica depth is below the service limit, replace the armature.

   Commutator Mica Depth
   Standard (New): 0.50—0.90 mm (0.020—0.035 in)
   Service Limit: 0.20 mm (0.008 in)

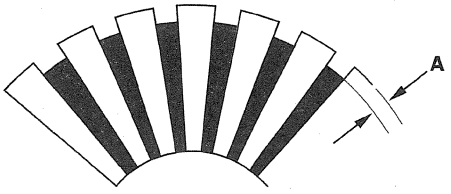

8. Check for continuity between the segments of the commutator. If there is an open circuit between any segments, replace the armature.

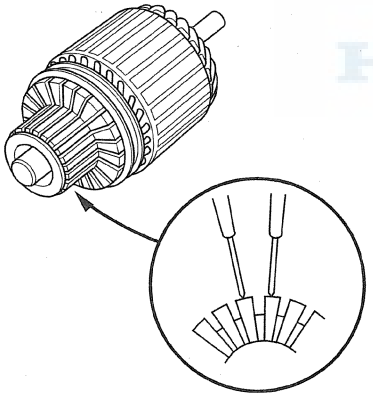

9. Place the armature (A) on an armature tester (B). Hold a hacksaw blade (C) on the armature core. If the blade is attracted to the core or vibrates while the core is turned, the armature is shorted. Replace the armature.

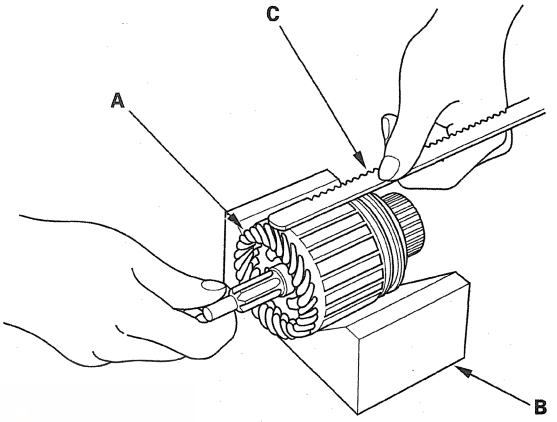

10. Use an ohmmeter to check for continuity between the commutator (A) and the armature coil core (B), and between the commutator and the armature shaft (C). If there is continuity, replace the armature.

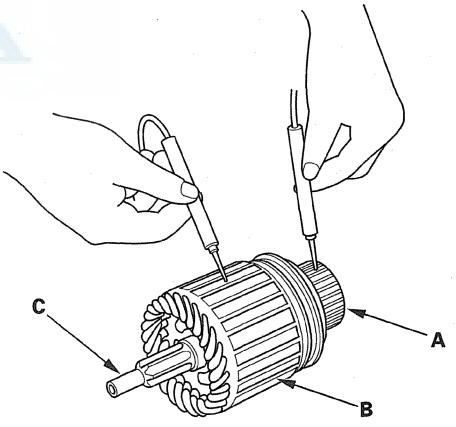

Overrunning Clutch Inspection

11. Slide the overrunning clutch (A) along the shaft. Replace it if it does not slide smoothly.

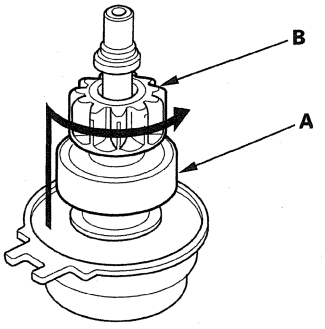

12. Hold the drive gear (B), and turn the overrunning clutch in the direction shown to make sure it turns freely. Also make sure the overrunning clutch locks in the opposite direction. If it does not lock, replace the overrunning clutch assembly.

13. If the starter drive gear is worn or damaged, replace the overrunning clutch assembly; the gear is not available separately.
Check the condition of the torque converter ring gear. Replace it if the starter drive gear teeth are damaged.

Starter Brush Inspection

14. Measure the brush length. If it is shorter than the service limit, replace the brush holder assembly.

Brush Length
Standard (New): 15.0—16.0 mm (0.59—0.63 in)
Service Limit: 9.0 mm (0.35 in)

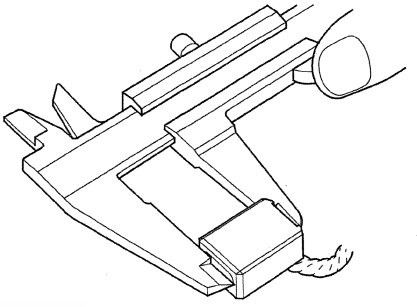

Starter Brush Holder Test

15. Check for continuity between the (+) brush holders (A) and (—) brush holders (B). If there is continuity, replace the brush holder assembly.

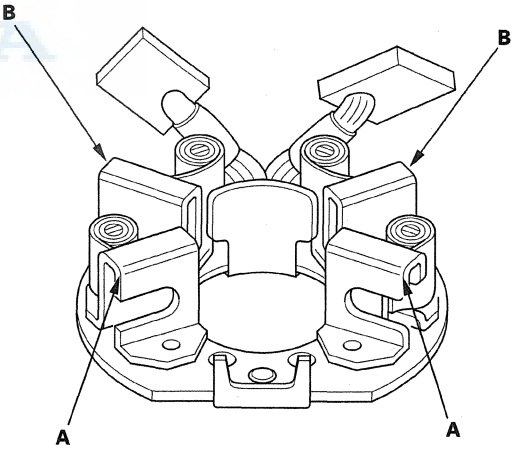

(cont'd)

Starter Overhaul (cont'd)

Brush Spring Inspection

16. Insert the brush (A) into the brush holder, and bring the brush into contact with the commutator, then attach a spring scale (B) to the spring (C). Measure the spring tension at the moment the spring lifts off the brush. If it is not within the standard, replace the brush holder assembly.

Spring Tension
Standard (New): 22.3—27.3 N
(2.27—2.78 kgf, 5.00—6.13 lbf)

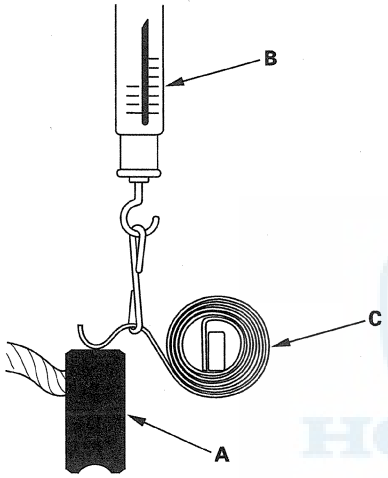

Planetary Gear Inspection

17. Check the planetary gears (A) and internal ring gear (B). Replace them if they are worn or damaged.

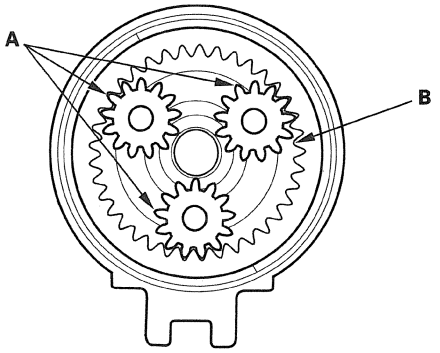

Starter Reassembly

18. Pry back each brush spring with a screwdriver, then position the brush on the brush holder about halfway out of its holder. Release the spring to hold it in place.

NOTE: To seat the new brushes. Slip a strip of #500 or #600 sandpaper, with the grit side up, between the commutator and the each brush, and smoothly turn the armature. The contact surface of the brushes will be sanded to the same contour as the commutator.

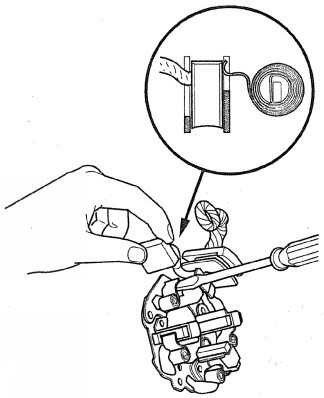

19. Install the armature housing (A) and the armature (B) by aligning the slotted point (C) to the projection (D).

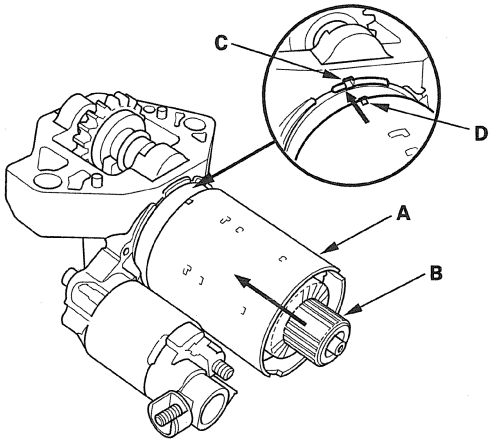

20. Install the brush holder. Next pry back each brush spring again, and push each brush down until it seats against the commutator, then release the spring against the end of the brush.

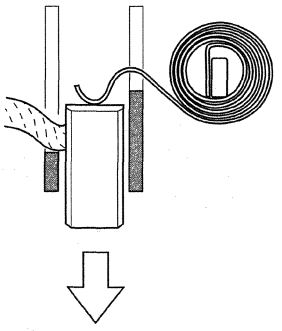

21. Install the end cover to retain the brush holder.

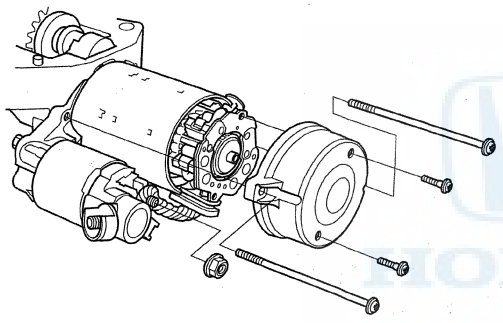

Component Location Index

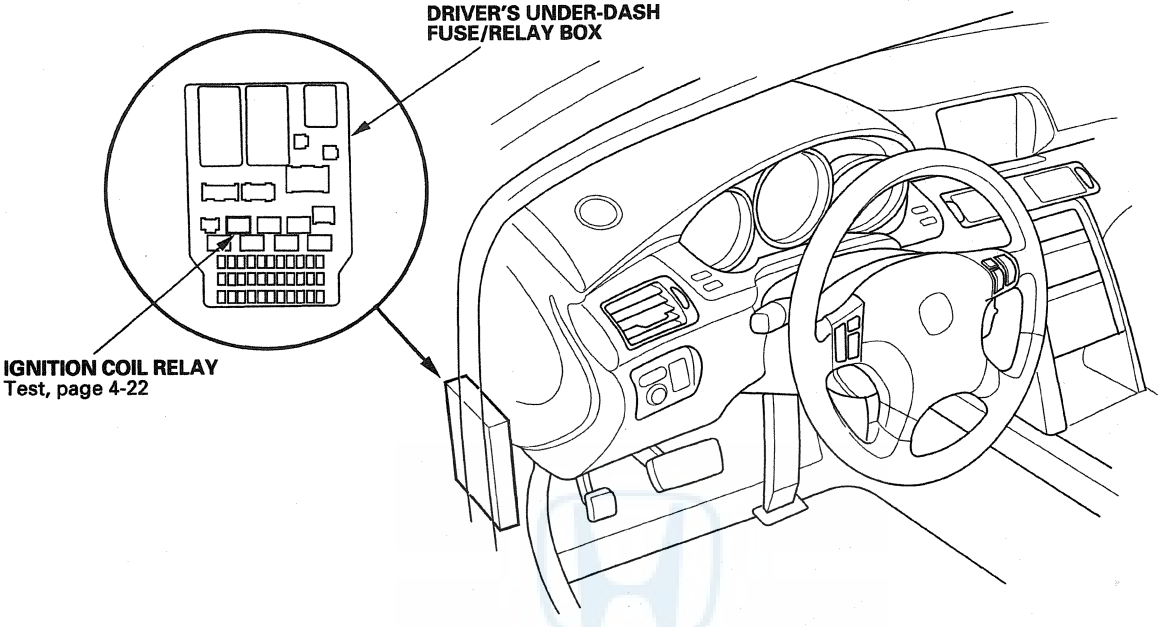

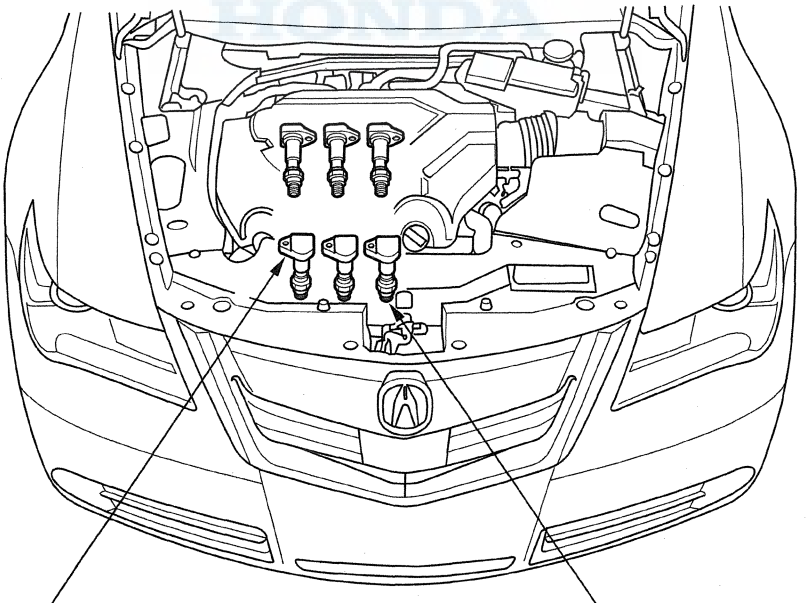

Circuit Diagram

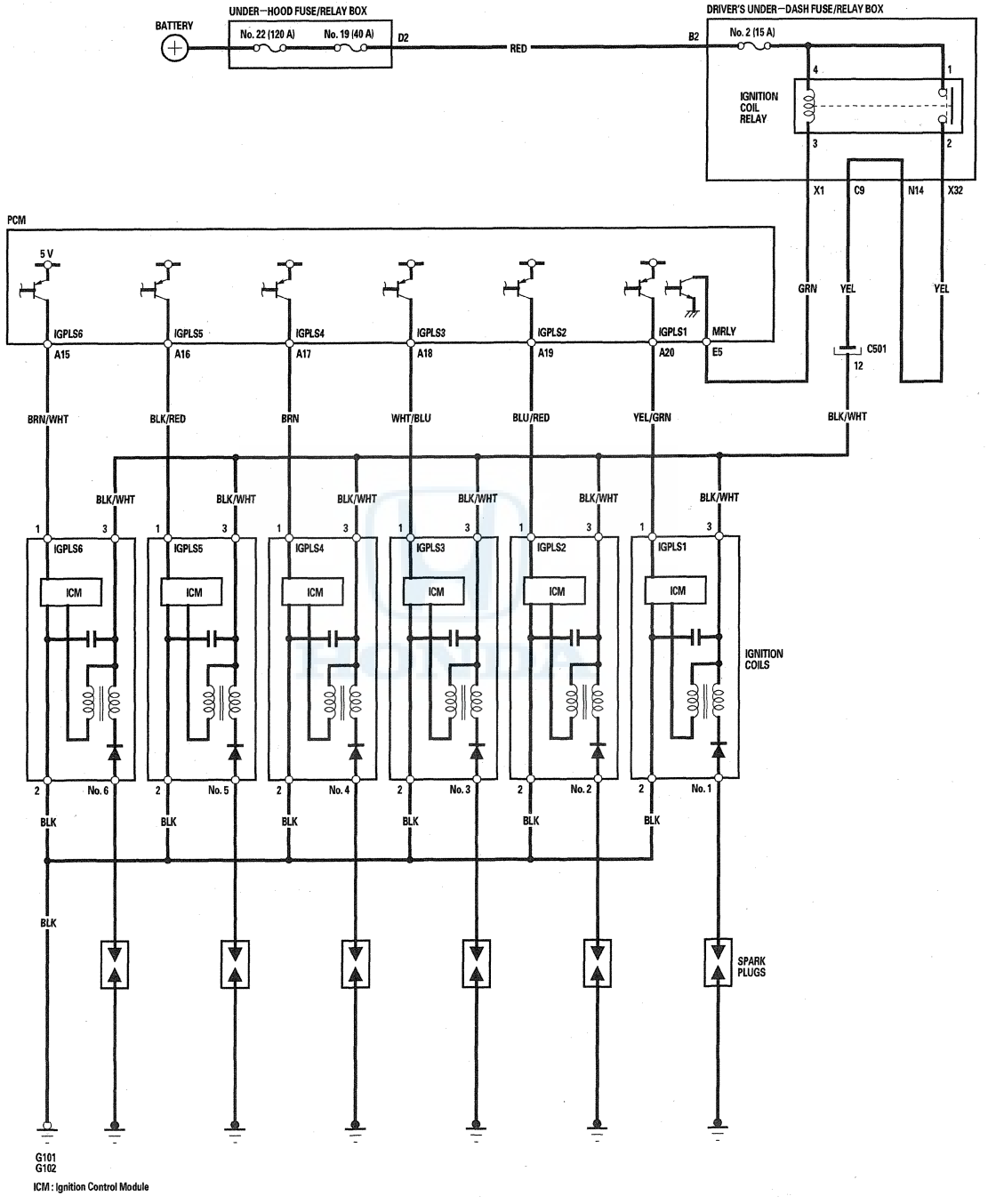

Ignition Timing Inspection

1. Connect the Honda Diagnostic System (HDS) to the data link connector (DLC) (see step 2 on page 11-3).
2. Turn the ignition switch to ON (II).
3. Make sure the HDS communicates with the vehicle and the powertrain control module (PCM). If it doesn't communicate, troubleshoot the DLC circuit (see page 11-211).
4. Check for DTCs (see page 11-3). If a DTC is present, diagnose and repair the cause before continuing with this test.
5. Start the engine. Hold the engine speed at 3,000 rpm with no load (in N or P) until the radiator fan comes on, then let it idle.
6. Check the idle speed (see page 11-312).
7. Jump the SCS line with the HDS.
8. Connect the timing light to the No. 1 ignition coil harness.

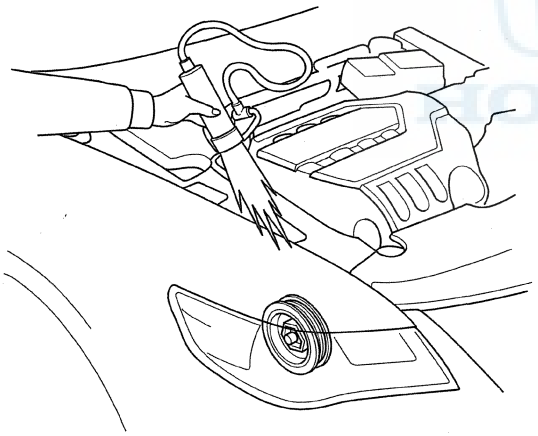

9. Aim the light toward the pointer (A) on the timing belt cover and the timing mark (B) on the crankshaft pulley. Check the ignition timing under a no load condition (headlights, blower fan, rear window defogger, and air conditioner are turned off).

   NOTE: The other pointer (C) is not used.

   Ignition Timing
   10 °±2 °BTDC (RED mark) at idle in N or P

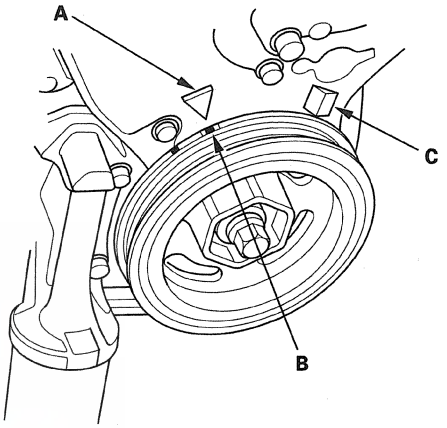

10. If the ignition timing differs from the specification, check the cam timing. If the cam timing is OK, update the PCM if it does not have the latest software (see page 11-230), or substitute a known-good PCM (see page 11-7), then recheck. If the system works properly, and the PCM was substituted, replace the original PCM (see page 11-232).
11. Disconnect the HDS and the timing light.

Ignition Coil Removal/Installation

FRONT

1. Remove the engine cover.

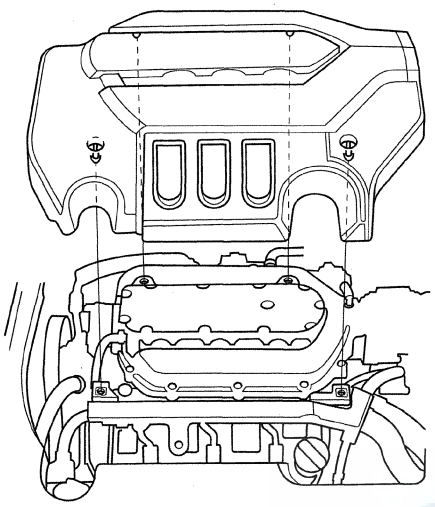

2. Remove the upper grille cover (see page 20-163).
3. Remove the coolant reservoir from the bracket.
4. Disconnect the ignition coil connectors (A), then remove the front ignition coils (B).

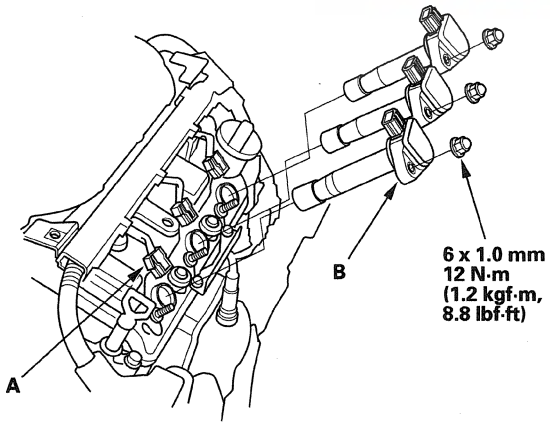

5. Install the front ignition coils in the reverse order of removal.

REAR

1. Disconnect the ignition coil connectors (A), then remove the rear ignition coils (B).

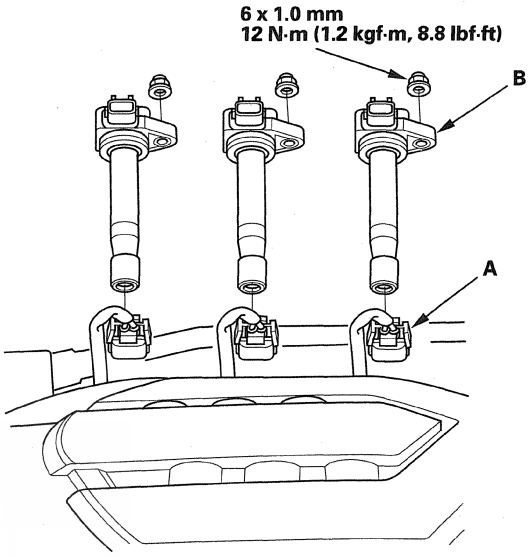

2. Install the rear ignition coils in the reverse order of removal.

Ignition Coil Relay Circuit Troubleshooting

1. Check the No. 2 (15 A) fuse in the driver's under-dash fuse/relay box.

   Is the fuse OK?

   YES—Go to step 2.

   NO—Replace the fuse. If the fuse continues to blow, locate and repair the short in the circuit between the under-dash fuse/relay box and the ignition coils. ■

2. Remove the ignition coil relay from the driver's under-dash fuse/relay box, and test it (see page 22-93).

   Is the relay OK?

   YES—Go to step 3.

   NO—Replace the ignition coil relay. ■

3. Measure the voltage between ignition coil relay 4P socket terminal No. 1 and body ground, then terminal No. 4 and body ground.

   IGNITION COIL RELAY 4P SOCKET

   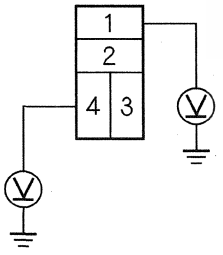

   Terminal side of female terminals

   Is there battery voltage?

   YES—Go to step 4.

   NO—Replace the driver's under-dash fuse/relay box. ■

4. Check for continuity between ignition coil relay 4P socket terminal No. 2 and the No. 1 ignition coil 3P connector terminal No. 3.

   IGNITION COIL RELAY 4P SOCKET

   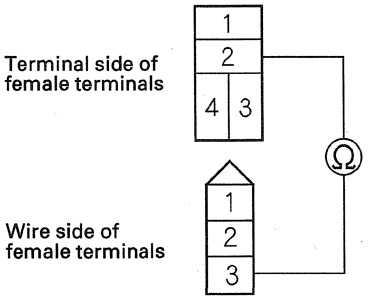

   No. 1 IGNITION COIL 3P CONNECTOR

   Is there continuity?

   YES—Go to step 5.

   NO—Repair an open in the wire between ignition coil relay 4P socket terminal No. 2 and No. 1 ignition coil 3P connector terminal No. 3. ■

5. Connect the Honda Diagnostic System (HDS) to the data link connector (DLC) (see step 2 on page 11-3).

6. Turn the ignition switch to ON (II).

7. Make sure the HDS communicates with the vehicle and the powertrain control module (PCM). If it doesn't communicate, troubleshoot the DLC circuit (see page 11-211).

8. Jump the SCS line with the HDS, then turn the ignition switch to LOCK (0).

   NOTE: This step must be done to protect the PCM from damage.

9. Disconnect PCM connector E (31P).

10. Check for continuity between ignition coil relay 4P socket terminal No. 3 and body ground.

IGNITION COIL RELAY 4P SOCKET

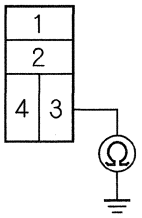

Terminal side of female terminals

Is there continuity?

YES—Repair a short in the wire between ignition coil relay 4P socket terminal No. 3 and the PCM (E5).■

NO—Go to step 11.

11. Check for continuity between ignition coil relay 4P socket terminal No. 3 and PCM connector terminal E5.

IGNITION COIL RELAY 4P SOCKET

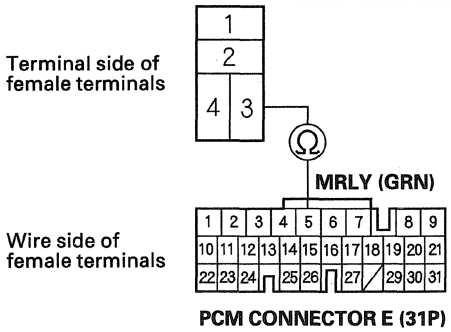

PCM CONNECTOR E (31P)

Is there continuity?

YES—The system is OK at this time. Check for loose or poor connections at the ignition coil relay and the PCM (E5).■

NO—Repair an open in the wire between ignition coil relay 4P socket terminal No. 3 and the PCM (E5).■

Spark Plug Inspection

1. Remove the spark plugs and inspect the electrodes and the ceramic insulator.

   - Burned or worn electrodes may be caused by these conditions:
     - Advanced ignition timing
     - Loose spark plug
     - Plug heat range too hot
     - Insufficient cooling

   - Fouled plugs may be caused by these conditions:
     - Retarded ignition timing
     - Oil in combustion chamber
     - Incorrect spark plug gap
     - Plug heat range too cold
     - Excessive idling/low speed running
     - Clogged air cleaner element
     - Deteriorated ignition coils

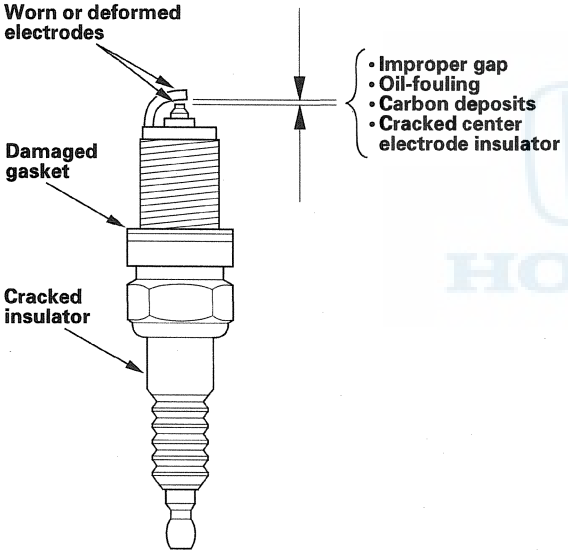

2. If the spark plug electrode is dirty or contaminated, clean the electrode with a plug cleaner.

   NOTE:
   - Do not use a wire brush or scrape the iridium electrode since this will damage the electrode.
   - When using a sand blaster spark plug cleaner, do not clean for more than 20 seconds to avoid damaging the electrode.

3. Do not adjust the gap (A) of iridium tip plugs; replace the spark plug if the gap is out of specification.

   Electrode Gap
   Standard (New): 1.0—1.1 mm (0.039—0.043 in)

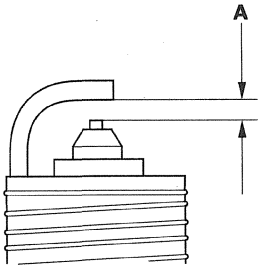

4. Replace the plug at the specified interval, or when the center electrode is rounded (A). Use only the listed spark plugs.

   Spark Plugs
   NGK: ILZKR7B-11S
   DENSO: SXU22HCR11S

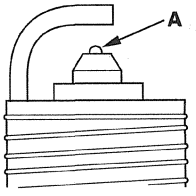

5. Apply a small amount of anti-seize compound to the plug threads, and screw the plugs into the cylinder head, finger-tight. Torque them to 18 N·m (1.8 kgf·m, 13 lbf·ft).

Charging System

Component Location Index

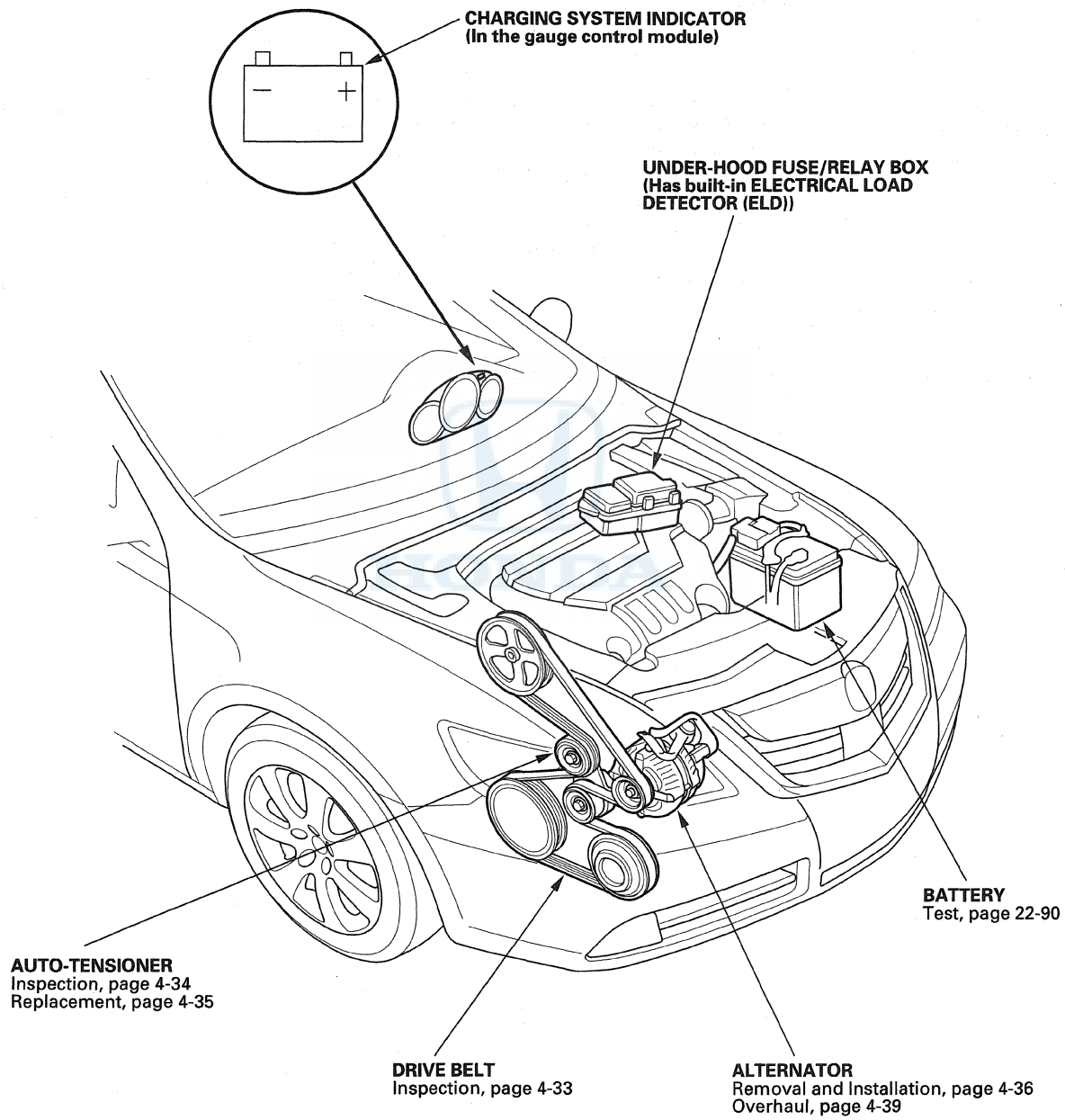

Symptom Troubleshooting Index

Symptom	Diagnostic procedure	Also check for
Charging system indicator does not come on with the ignition switch in ON (II)	Troubleshoot the charging system indicator circuit (see page 4-28).	
Charging system indicator stays on	1. Check for PGM-FI DTCs. 2. Troubleshoot the charging system indicator circuit (see page 4-28). 3. Check for a broken drive belt (see page 4-33). 4. Check the drive belt auto-tensioner (see page 4-34).	
Battery discharged	1. Check for a poor connection at the battery terminal. 2. Check for a broken drive belt (see page 4-33). 3. Test the battery (see page 22-90). 4. Troubleshoot the alternator and regulator circuit (see page 4-30). 5. Check the drive belt auto-tensioner (see page 4-34). 6. Check for excessive parasitic current draw with the ignition switch in LOCK (0), and the key removed. The multiplex control units may take up to 10 minutes to turn off (sleep mode) for some models.	
Battery overcharged	1. Test the battery (see page 22-90). 2. Troubleshoot the alternator and regulator circuit (see page 4-30).	

Circuit Diagram

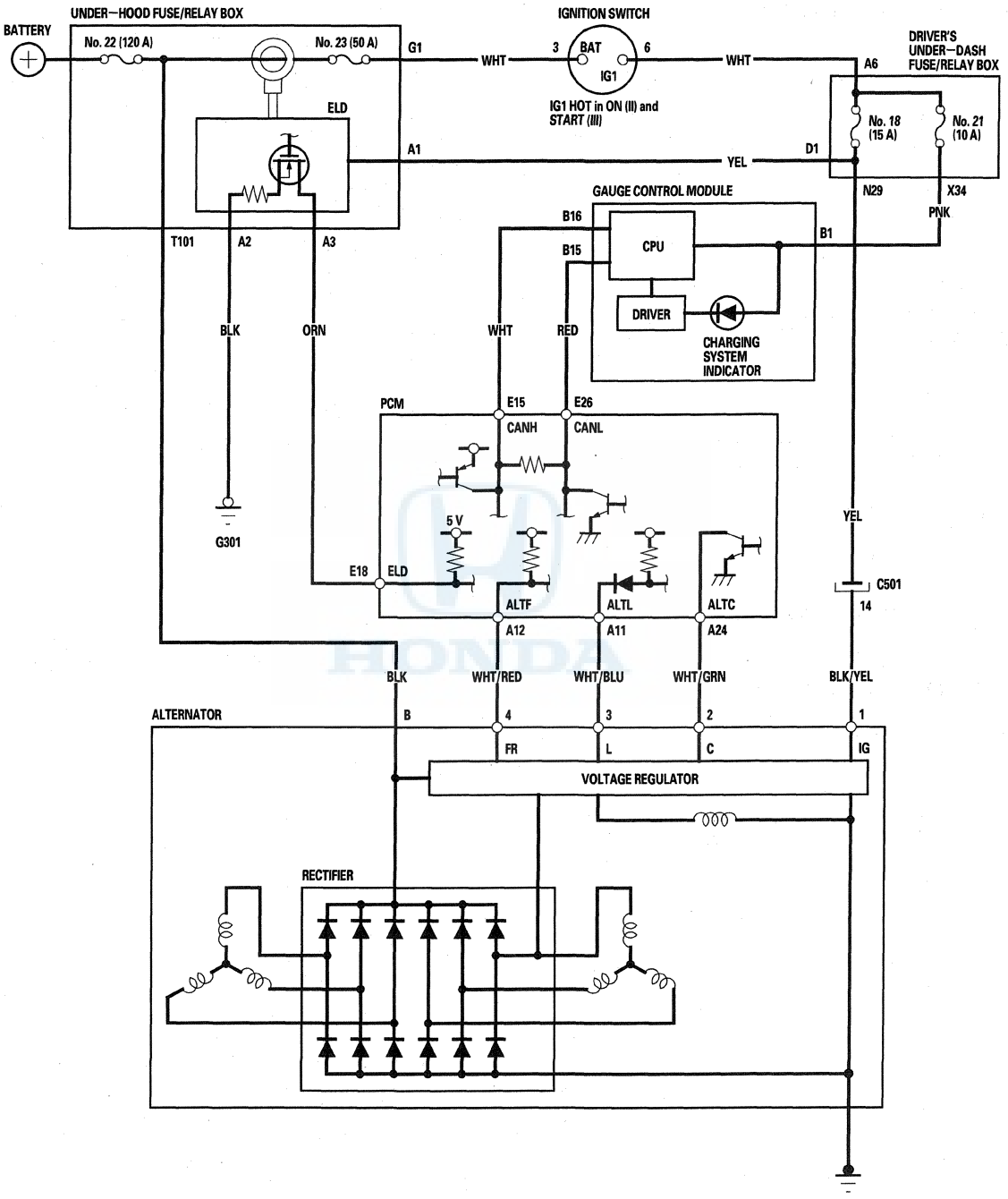

Charging System Indicator Circuit Troubleshooting

1. Turn the ignition switch to ON (II).

   Does the charging system indicator come on?

   YES—Go to step 2.

   NO—Go to step 14.

2. Start the engine. Hold the engine speed at 2,000 rpm for 1 minute.

   Does the charging system indicator go off?

   YES—Charging system indicator circuit is OK. Go to the alternator and regulator circuit troubleshooting (see page 4-30). ■

   NO—Go to step 3.

3. Do the gauge control module self-diagnostic function procedure (see page 22-396).

   Does the charging system indicator flash?

   YES—Go to step 4.

   NO—Replace the gauge control module (see page 22-419). ■

4. Turn the ignition switch to LOCK (0).

5. Disconnect the alternator 4P connector.

6. Turn the ignition switch to ON (II).

   NOTE: The charging system indicator may come on, and then go off.

   Does the charging system indicator go off?

   YES—Replace the alternator (see page 4-36), or repair the alternator (see page 4-39). ■

   NO—Go to step 7.

7. Turn the ignition switch to LOCK (0).

8. Connect the Honda Diagnostic System (HDS) to the data link connector (DLC) (see step 2 on page 11-3).

9. Turn the ignition switch to ON (II).

10. Make sure the HDS communicates with the vehicle and the powertrain control module (PCM). If it doesn't communicate, troubleshoot the DLC circuit (see page 11-211).

11. Jump the SCS line with the HDS, then turn the ignition switch to LOCK (0).

    NOTE: This step must be done to protect the PCM from damage.

12. Disconnect PCM connector A (31P).

13. Check for continuity between PCM connector terminal A11 and body ground.

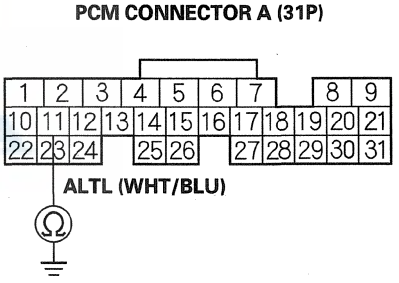

Is there continuity?

YES—Repair a short in the wire between the alternator and the PCM. ■

NO—Update the PCM if it does not have the latest software (see page 11-230), or substitute a known-good PCM (see page 11-7), then recheck. If the symptom/indication goes away with a known-good PCM, replace the original PCM (see page 11-232). ■

14. Do the gauge control module self-diagnostic function procedure (see page 22-396).

    Does the charging system indicator flash?

    YES—Go to step 15.

    NO—Replace the gauge control module (see page 22-419). ■

15. Turn the ignition switch to LOCK (0).

16. Disconnect the alternator 4P connector.

17. Connect alternator 4P connector terminal No. 3 and body ground with a jumper wire.

ALTERNATOR 4P CONNECTOR

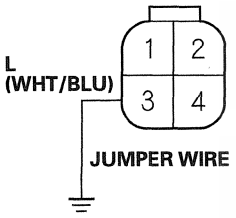

Wire side of female terminals

18. Turn the ignition switch to ON (II).

    Does the charging system indicator come on?

    YES—Replace the alternator (see page 4-36), or repair the alternator (see page 4-39). ■

    NO—Go to step 19.

19. Connect the HDS to the DLC (see step 2 on page 11-3).

20. Turn the ignition switch to ON (II).

21. Make sure the HDS communicates with the vehicle and the PCM. If it doesn't communicate, troubleshoot the DLC circuit (see page 11-211).

22. Jump the SCS line with the HDS, then turn the ignition switch to LOCK (0).

    NOTE: This step must be done to protect the PCM from damage.

23. Disconnect PCM connector A (31P).

24. Check for continuity between PCM connector terminal A11 and alternator 4P connector terminal No. 3.

ALTERNATOR 4P CONNECTOR **PCM CONNECTOR A (31P)**

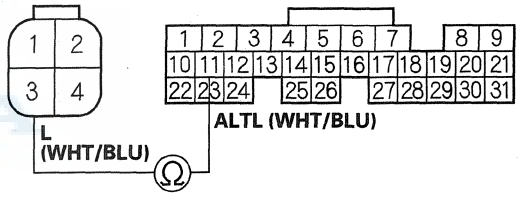

Wire side of female terminals

Is there continuity?

YES—Update the PCM if it does not have the latest software (see page 11-230), or substitute a known-good PCM (see page 11-7), then recheck. If the symptom/indication goes away with a known-good PCM, replace the original PCM (see page 11-232). ■

NO—Repair an open in the wire between the alternator and the PCM. ■

Alternator and Regulator Circuit Troubleshooting

Special Tools Required
Alternator, Regulator, Battery & Starter tester OTC3131
Available through the Acura Tool and Equipment Program 888-424-6857

1. Make sure the battery connections are good, and the battery is sufficiently charged.
2. Connect the alternator, regulator, battery & starter tester (OTC3131) to the battery as shown.

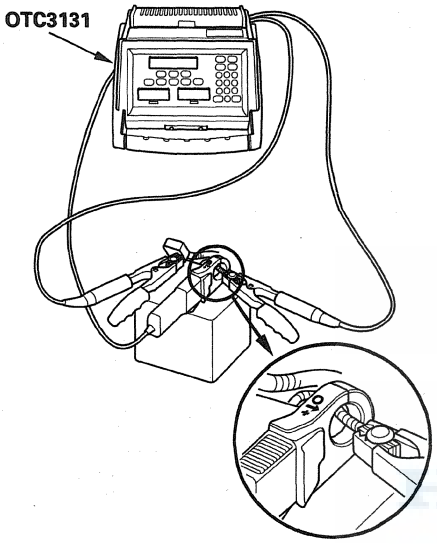

3. Start the engine. Hold the engine speed at 3,000 rpm with no load until the radiator fan comes on, then let it idle.
4. Do the charging system test.
5. Raise the engine speed to 2,000 rpm and hold it there.

   Is the voltage within 13.5– 15.1 V?

   YES—Go to step 6.

   NO—Based on the following symptoms, take the appropriate action:

   - If the voltage is less than 13.5 V, go to alternator control circuit troubleshooting (see page 4-31).
   - If the voltage is over 15.1 V, go to replace alternator (see page 4-36) or repair the rear housing assembly (see page 4-39).■

6. Check the alternator, regulator, battery & starter tester (OTC3131) display.

   Is the amperage 87.5 A or more?

   YES—The charging system is OK.■

   NOTE: If the charging system indicator is still on, replace the alternator (see page 4-36).

   NO—Replace the alternator (see page 4-36) or repair the alternator (see page 4-39).■

Alternator Control Circuit Troubleshooting

NOTE: Do this troubleshooting if, in step 5 of the Alternator and Regulator Circuit Troubleshooting (see page 4-30), the battery voltage is less than 13.5 V.

1. Connect the Honda Diagnostic System (HDS) to the data link connector (DLC) (see step 2 on page 11-3).
2. Turn the ignition switch to ON (II).
3. Make sure the HDS communicates with the vehicle and the powertrain control module (PCM). If it doesn't communicate, troubleshoot the DLC circuit (see page 11-211).
4. Check for DTCs (see page 11-3). If a DTC is present, diagnose and repair the cause before continuing with this test.
5. Disconnect the alternator 4P connector from the alternator.
6. Start the engine, and turn on the headlights to high beam.
7. Measure the voltage between alternator 4P connector terminal No. 2 and the positive terminal of the battery.

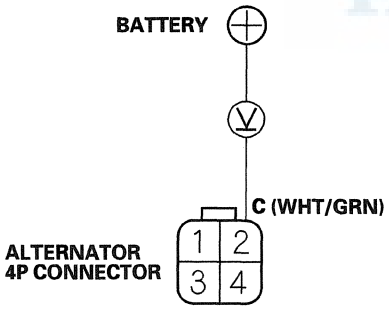

Wire side of female terminals

Is there 1 V or less?

YES—Go to step 11.

NO—Go to step 8.

8. Jump the SCS line with the HDS, then turn the ignition switch to LOCK (0).

   NOTE: This step must be done to protect the PCM from damage.

9. Disconnect PCM connector A (31P).
10. Check for continuity between PCM connector terminal A24 and body ground.

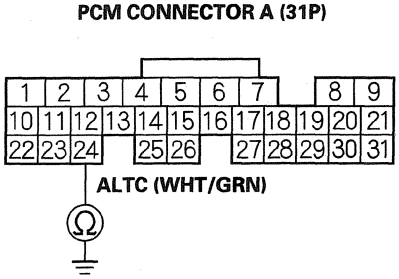

Wire side of female terminals

Is there continuity?

YES—Repair a short in the wire between the alternator and the PCM. ■

NO—Update the PCM if it does not have the latest software (see page 11-230), or substitute a known-good PCM (see page 11-7), then recheck. If the symptom/indication goes away with a known-good PCM, replace the original PCM (see page 11-232). ■

11. Jump the SCS line with the HDS, then turn the ignition switch to LOCK (0).

    NOTE: This step must be done to protect the PCM from damage.

12. Disconnect PCM connector A (31P).

(cont'd)

Alternator Control Circuit Troubleshooting (cont'd)

13. Check for continuity between PCM connector terminal A24 and alternator 4P connector terminal No. 2.

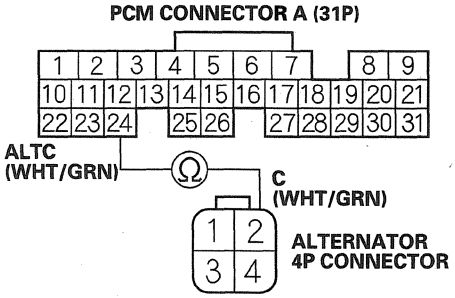

Wire side of female terminals

Is there continuity?

YES—Replace the alternator (see page 4-36), or repair the alternator (see page 4-39). ■

NO—Repair an open in the wire between the alternator and the PCM. ■

Drive Belt Inspection

1. Remove the right upper fender trim (see page 20-162).
2. Inspect the belt for cracks or damage. If the belt is cracked or damaged, replace it.
3. Check that the auto-tensioner indicator (A) is within the standard range (B) as shown. If it is out of the standard range, replace the drive belt (see page 4-33).

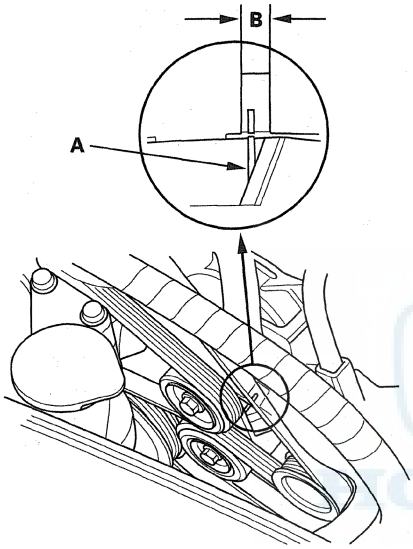

Drive Belt Replacement

Special Tools Required
Belt tension release tool Snap-on YA9317 or equivalent, commercially available

1. Remove the right upper fender trim (see page 20-162).
2. Remove the engine cover (see page 4-21).
3. Move the auto-tensioner (A) using the belt tension release tool in the direction shown to relieve tension from the drive belt, then remove the drive belt.

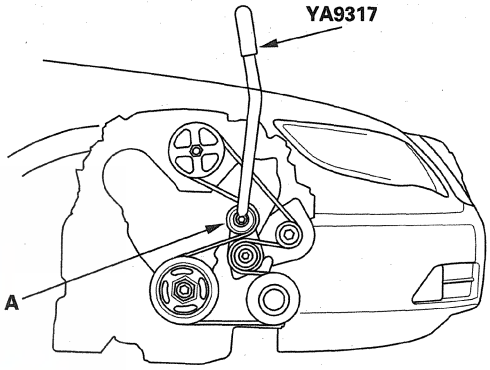

4. Install the new belt in the reverse order of removal.

Drive Belt Auto-tensioner Inspection

Special Tools Required
Belt tension release tool Snap-on YA9317 or equivalent, commercially available

1. Remove the right upper fender trim (see page 20-162).

2. Turn the ignition switch to ON (II), and make sure to turn the A/C switch OFF. Turn the ignition switch to LOCK (0).

3. Check the position of the auto-tensioner's indicator pointer (A). Start the engine, then check the position again with the engine idling. If the position of the indicator moves or fluctuates a lot, replace the auto-tensioner (see page 4-35).

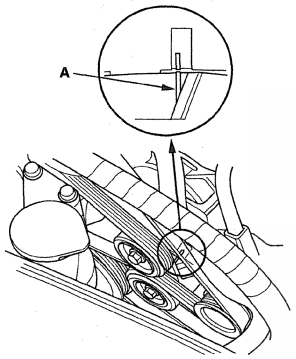

4. Check for abnormal noise from the tensioner pulley. If you hear any abnormal noise, replace the auto-tensioner pulley (see page 4-35).

5. Remove the drive belt (see page 4-33).

6. Move the auto-tensioner within its limit using the belt tension release tool in the direction shown. Check that the tensioner moves smoothly and without any abnormal noise. If the tensioner does not move smoothly, or you hear abnormal noises, replace the auto-tensioner (see page 4-35).

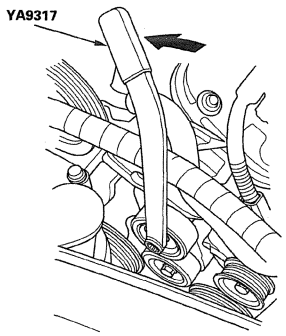

7. Remove the auto-tensioner (see page 4-35).

8. Clamp the auto-tensioner (A) by using a 10 mm bolt (B), 8 mm bolt (C), and a vise (D) as shown. Do not clamp the auto-tensioner itself.

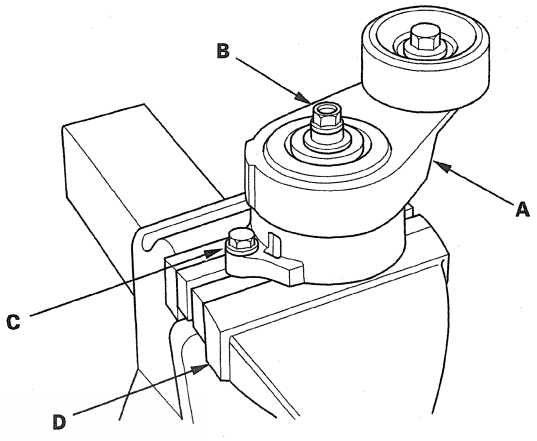

9. Attach a torque wrench (A) to the pulley bolt. Measure the torque when the tensioner is turned counterclockwise. If the torque is less than the specified value, replace the auto-tensioner (see page 4-35).

Auto-tensioner Spring Torque
76.6 N·m (7.81 kgf·m, 56.5 lbf·ft)

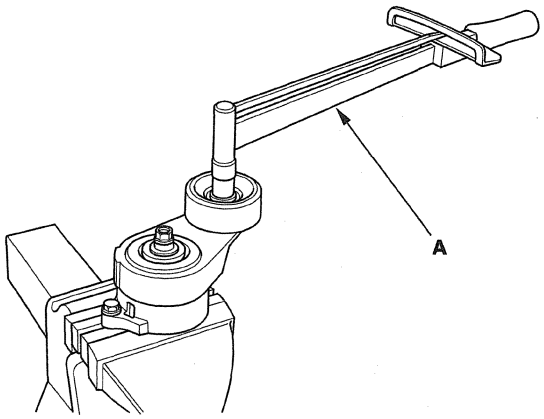

Drive Belt Auto-tensioner Replacement

1. Remove the drive belt (see page 4-33).
2. Remove the splash shield (see step 4 on page 4-36).
3. Remove the auto-tensioner.

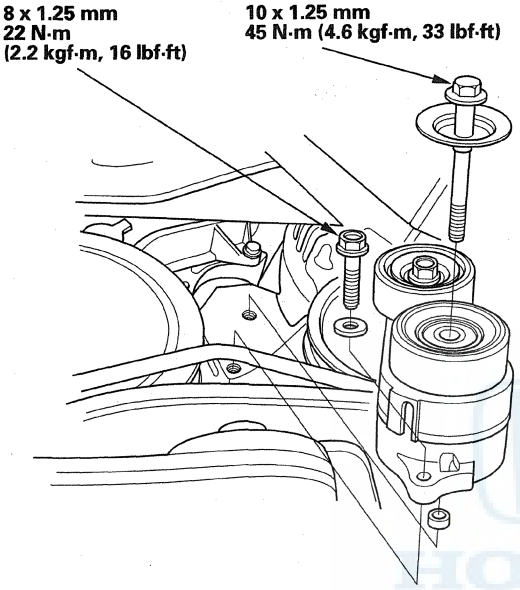

4. Install the auto-tensioner in the reverse order of removal.

Tensioner Pulley Replacement

1. Remove the auto-tensioner (see page 4-35).
2. Remove the pulley bolt (A) (left-hand threads), and remove the tensioner pulley (B).

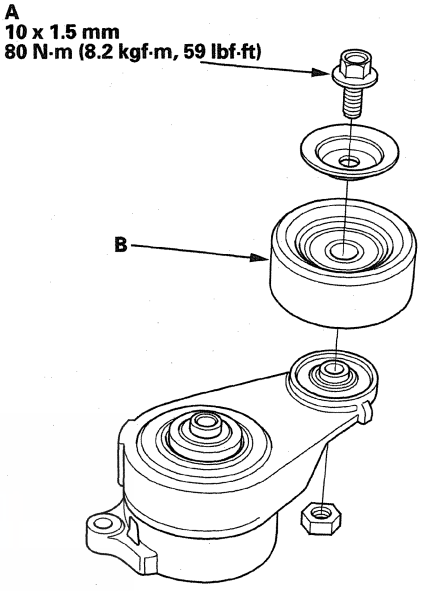

3. Install the tensioner pulley in the reverse order of removal.

Alternator Removal and Installation

Removal

1. Do the battery terminal disconnection procedure (see page 22-91).
2. Remove the upper grille cover (see page 20-163).
3. Raise the vehicle on the lift to full height.
4. Remove the shield.

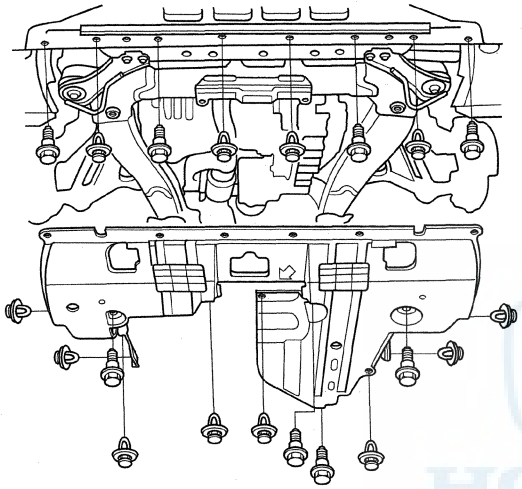

5. Remove the ground cable (A), the harness clamps (B), and the connector (C) from the A/C condenser fan shroud.

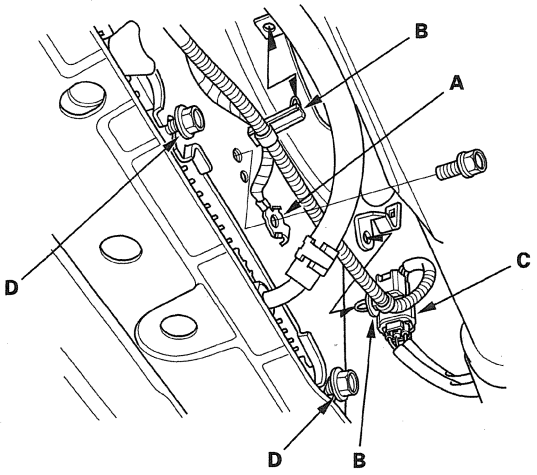

6. Loosen the two bolts (D) securing the A/C condenser fan shroud.
7. Lower the vehicle on the lift.
8. Remove the radiator fan control (RFC) unit (see page 10-22).
9. Remove the coolant reservoir (A).

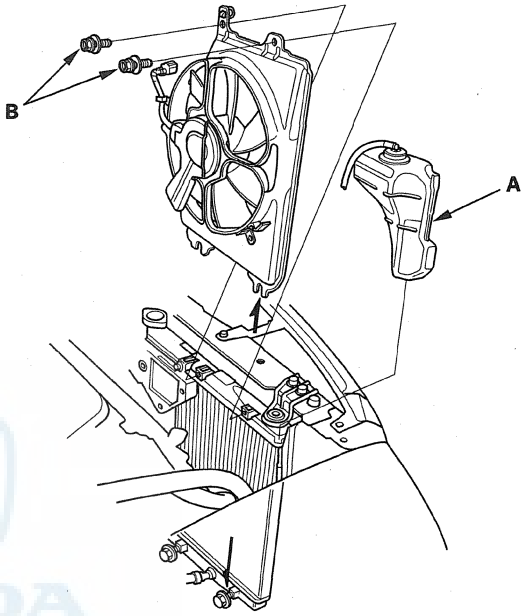

10. Remove the two bolts (B), then remove the A/C condenser fan shroud.
11. Remove the drive belt (see page 4-33).

12. Disconnect the alternator connector (A) and BLK wire (B) from the alternator.

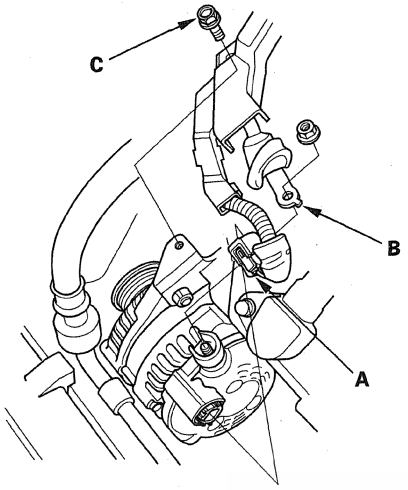

13. Remove the bolt (C) securing the harness holder.

14. Remove the mounting bolt (A) and alternator bracket mounting bolt (B), then remove the alternator.

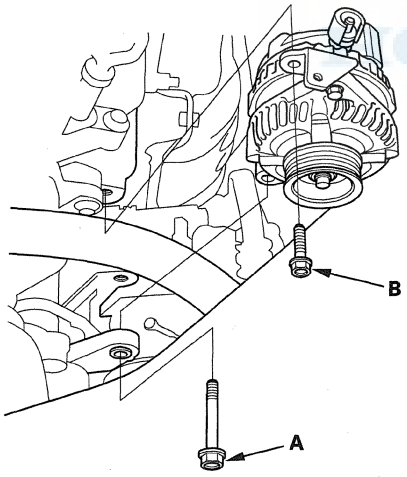

Installation

1. Install the alternator.

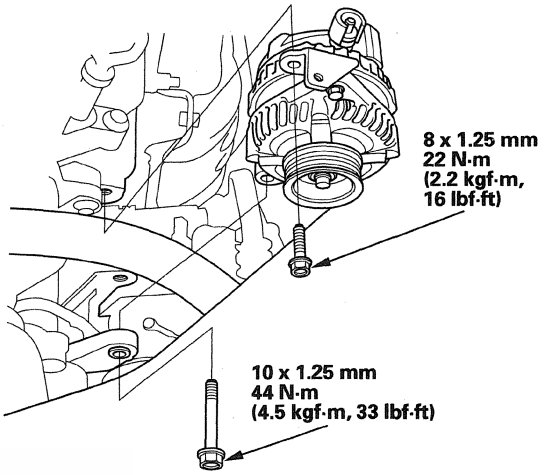

2. Connect the alternator connector (A) and the BLK wire (B) to the alternator.

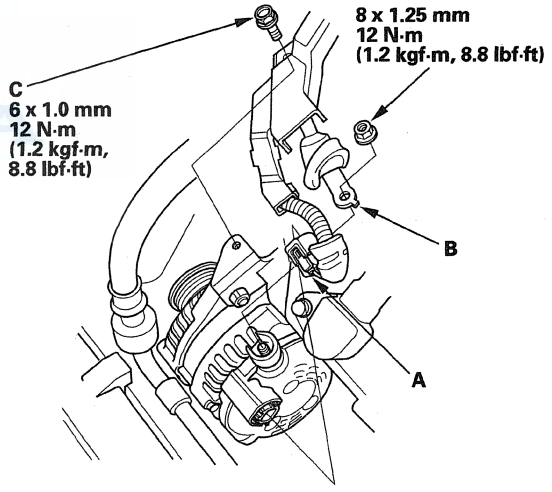

3. Install the bolt (C) securing the harness holder.

4. Install the drive belt (see page 4-33).

(cont'd)

Alternator Removal and Installation (cont'd)

5. Install the A/C condenser fan shroud (A), and tighten the bolts.

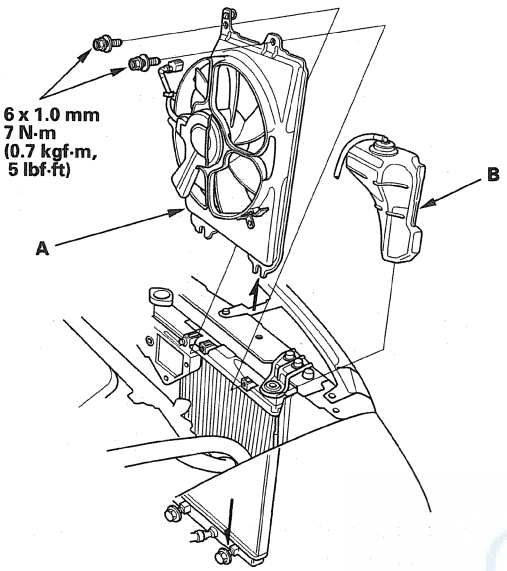

6. Install the coolant reservoir (B).
7. Install the RFC unit (see page 10-22).
8. Raise the vehicle on the lift to full height.
9. Tighten the two bolts (A) securing the A/C condenser fan shroud.

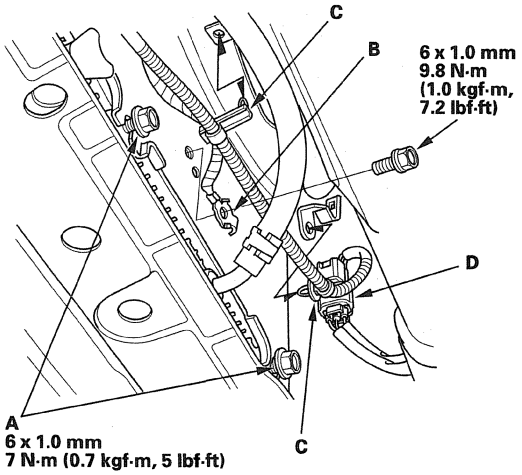

10. Install the ground cable (B), the harness clamps (C), and the connector (D) to the A/C condenser fan shroud.
11. Install the splash shield.

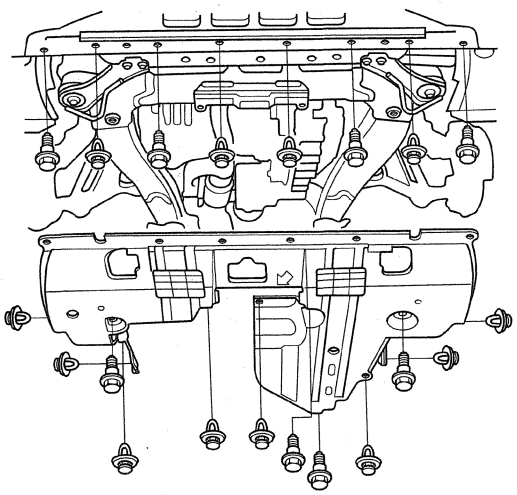

12. Lower the vehicle on the lift.
13. Install the upper grille cover (see page 20-163).
14. Do the battery terminal reconnection procedure (see page 22-91).

Alternator Overhaul

Exploded View

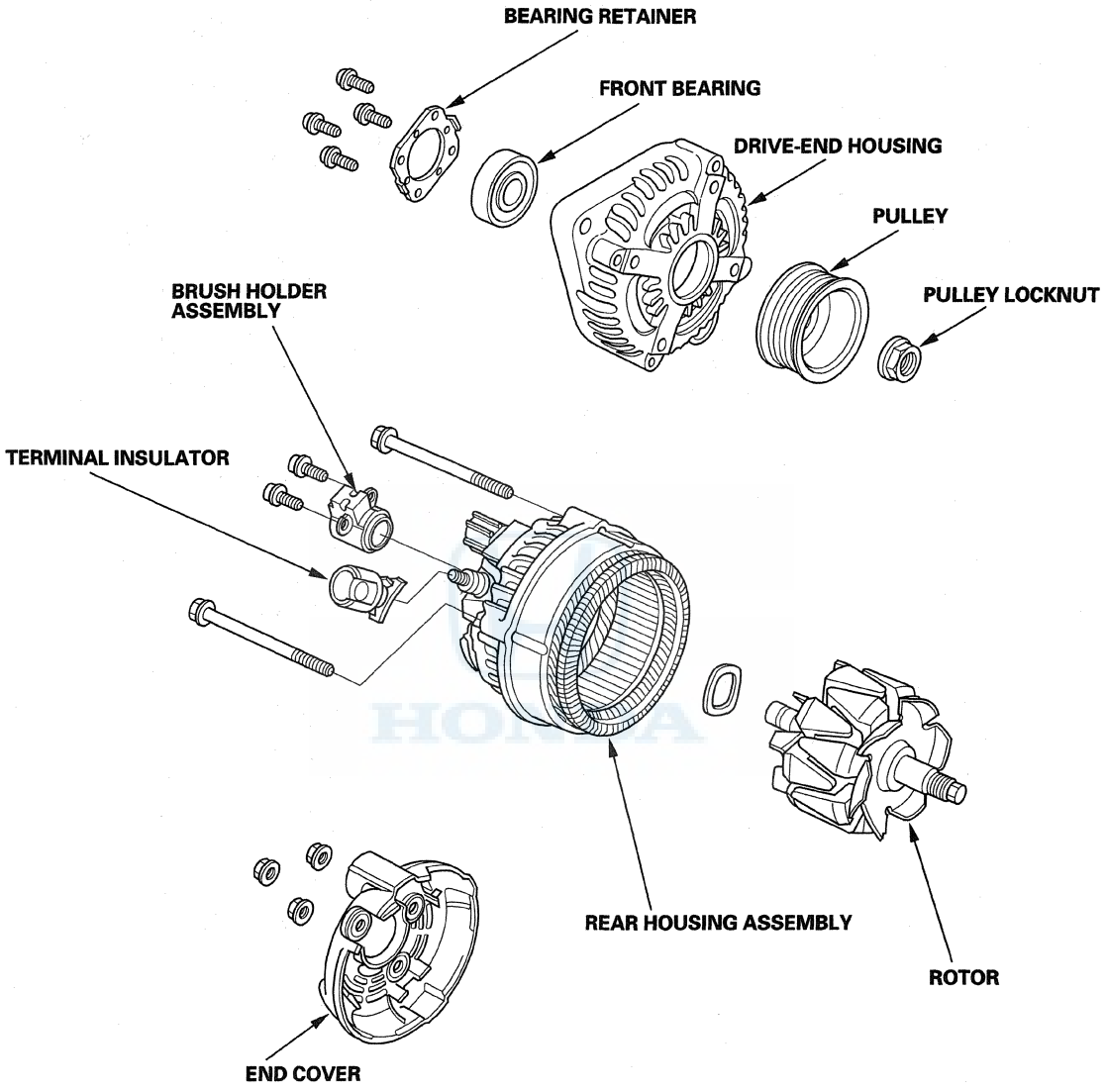

(cont'd)

Alternator Overhaul (cont'd)

Special Tools Required
- Driver handle, 15 x 135L 07749-0010000
- Attachment, 42 x 47 mm 07746-0010300

NOTE: Refer to the Exploded View as needed during this procedure.

Alternator Disassembly

1. Test the alternator and regulator before you remove them (see page 4-30).
2. Remove the alternator (see page 4-36).
3. If the front bearing needs replacing, remove the pulley locknut with a 10 mm wrench (A) and a 22 mm wrench (B). If necessary, use an impact wrench.

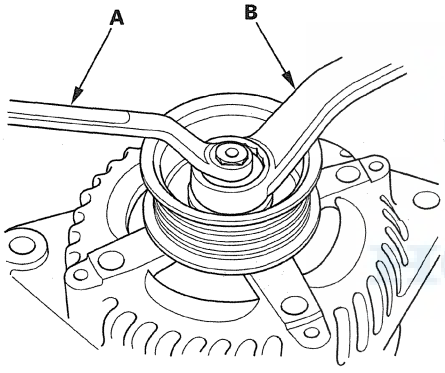

4. Remove the three flange nuts.

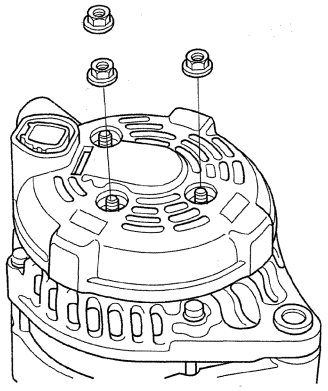

5. Remove the end cover (A) and the insulator (B).

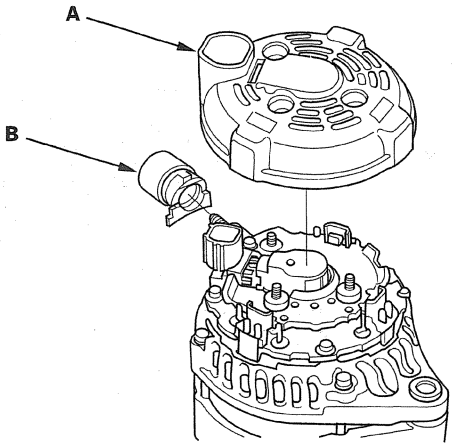

6. Remove the brush holder (A).

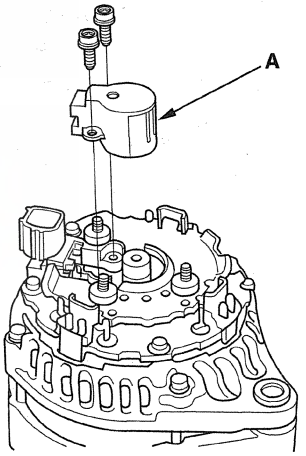

7. Remove the four bolts, then remove the rear housing assembly (A) and washer (B).

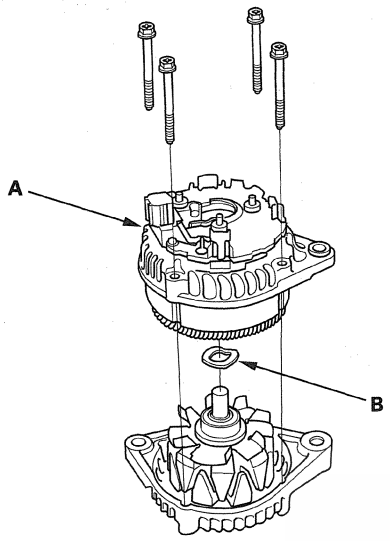

8. If you are not replacing the front bearing, go to step 13. Remove the rotor from the drive-end housing.

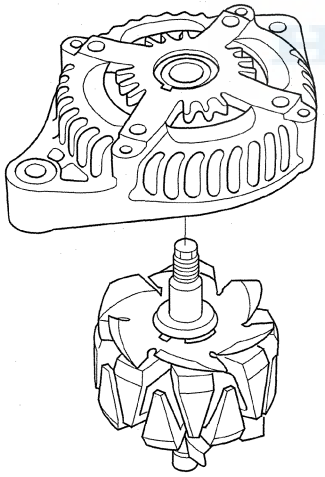

9. Inspect the rotor shaft for scoring, and inspect the bearing journal surface in the drive-end housing for seizure marks.

   - If the rotor is damaged, replace the rotor assembly.
   - If the rotor is OK, go to step 10.

10. Remove the front bearing retainer plate.

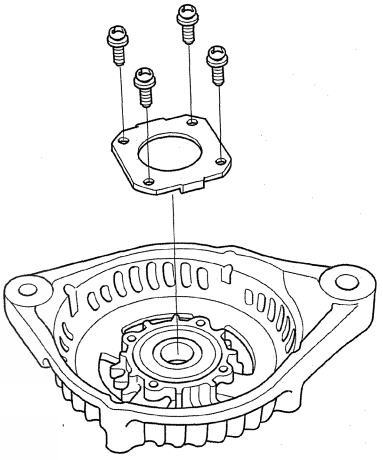

11. Drive out the front bearing with a brass drift and hammer.

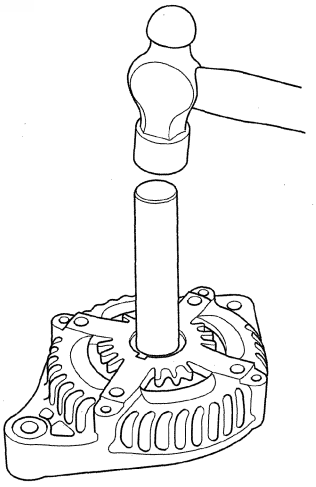

(cont'd)

Alternator Overhaul (cont'd)

12. Install a new front bearing in the drive-end housing with a hammer, the driver handle, 15 x 135L, and the attachment, 42 x 47 mm.

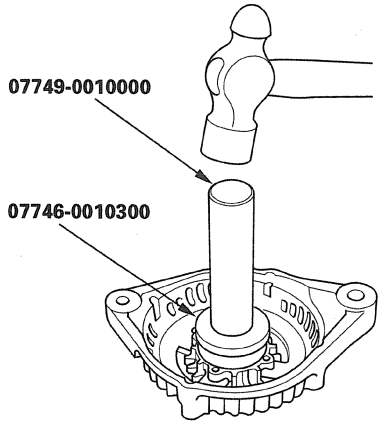

Alternator Brush Inspection

13. Measure the length of both brushes (A) with a vernier caliper (B).

- If either brush is shorter than the service limit, replace the brush holder assembly.
- If the brush length is OK, go to step 14.

Alternator Brush Length
Standard (New): 10.5 mm (0.41 in)
Service Limit: 1.5 mm (0.06 in)

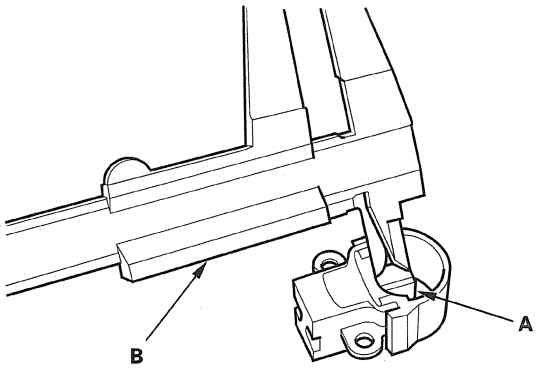

Rotor Slip Ring Test

14. Check for continuity between the slip rings (A).

- If there is continuity, go to step 15.
- If there is no continuity, replace the rotor assembly.

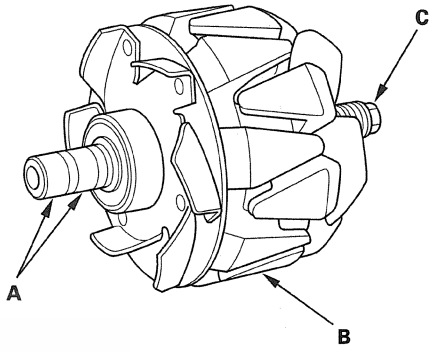

15. Check for continuity between each slip ring and the rotor (B) and the rotor shaft (C).

- If there is no continuity, replace the rear housing assembly, and go to step 16.
- If there is continuity, replace the rotor assembly.

16. Assemble the alternator in the reverse order of disassembly, and note these items:

- Be careful not to get any grease or oil on the slip rings.
- If you removed the pulley, tighten its locknut to 110 N·m (11.2 kgf·m, 81.0 lbf·ft) when you reinstall it.

Component Location Index

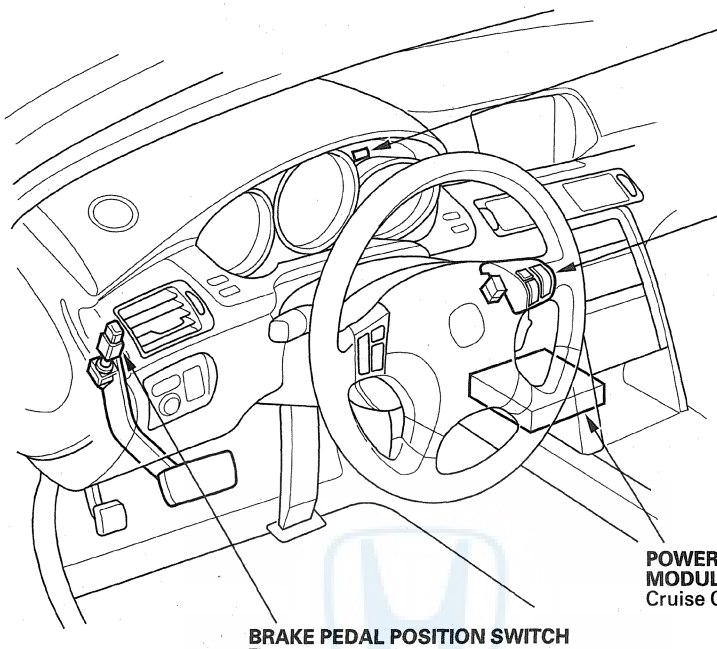

CRUISE CONTROL MAIN INDICATOR (Built into gauge control module)

CRUISE CONTROL COMBINATION SWITCH
Test/Replacement, page 4-48

POWERTRAIN CONTROL MODULE (PCM)
Cruise Control Input Test, page 4-46

BRAKE PEDAL POSITION SWITCH
Test, page 22-227
Pedal Height Adjustment, page 19-6

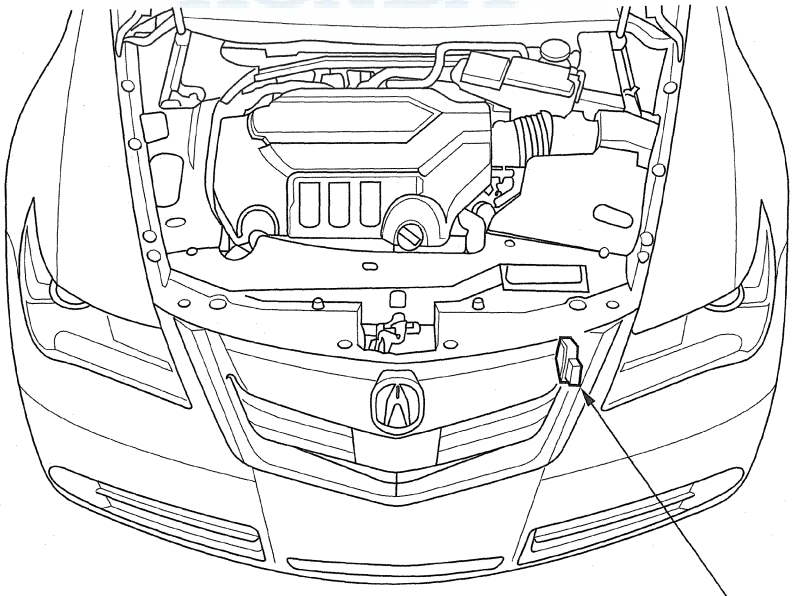

TRANSMISSION RANGE SWITCH
Test, page 14-244
Replacement, page 14-245

Symptom Troubleshooting Index

Symptom	Diagnostic procedure	Also check for
Cruise control cannot be set	1. Check for PGM-FI and body DTCs. 2. Check the No. 13 (15 A) fuse in the under-hood fuse/relay box, and the No. 18 (15 A) fuse in the driver's under-dash fuse/relay box. 3. Do the cruise control input test (see page 4-46). 4. Do the cruise control combination switch test (see page 4-48).	Poor ground at G101, G102
Cruise control can be set, but the cruise main indicator does not come on	1. Check for PGM-FI and body DTCs. 2. Do the gauge control module self-diagnostic function procedure (see page 22-396). 3. Do the cruise control input test (see page 4-46). Test the cruise control main switch signal input.	Faulty gauge control module
Vehicle does not accelerate accordingly when the resume/accel button is pressed	1. Check for PGM-FI and body DTCs. 2. Do the cruise control input test (see page 4-46). Test the cruise control and resume/accel switch signal inputs. 3. Do the cruise control combination switch test (see page 4-48).	Open circuit, loose or disconnected terminal: YEL/WHT, or LT GRN
Set speed does not cancel when the brake pedal is pressed	1. Check for PGM-FI and body DTCs. 2. Do the cruise control input test (see page 4-46). Test the brake pedal position switch signal input.	• Short to power in the BRN wire • Faulty brake pedal position switch
Set speed does not cancel when the cruise control main button is pressed	1. Check for PGM-FI and body DTCs. 2. Do the cruise control input test (see page 4-46). Test the cruise control master button signal input. 3. Do the cruise control combination switch test (see page 4-48).	Short to ground in the BRN or LT GRN wire
Set speed does not cancel when the cancel button is pressed	1. Check for PGM-FI and body DTCs. 2. Do the cruise control input test (see page 4-46). Test the cruise control cancel switch signal input. 3. Do the cruise control combination switch test (see page 4-48).	Open circuit, loose or disconnected terminals: GRN/YEL, GRY, YEL/WHT, or LT GRN
Set speed does not resume when the resume/accel button is pressed (with the cruise control main switch turned on, and set speed temporarily canceled by pressing the brake pedal)	1. Check for PGM-FI and body DTCs. 2. Check the brake pedal position switch adjustment (see page 19-6). 3. Do the cruise control input test (see page 4-46). Test the cruise control resume/accel switch signal input. Test the brake pedal position switch signal input. 4. Do the cruise control combination switch test (see page 4-48).	• Open circuit, loose or disconnected terminals: YEL/WHT or LT GRN • Faulty brake pedal position switch
With the ignition switch in ON (II), and the lighting switch turned on, the cruise control combination switch illumination does not come on	Do the cruise control combination switch test (see page 4-48).	

Circuit Diagram

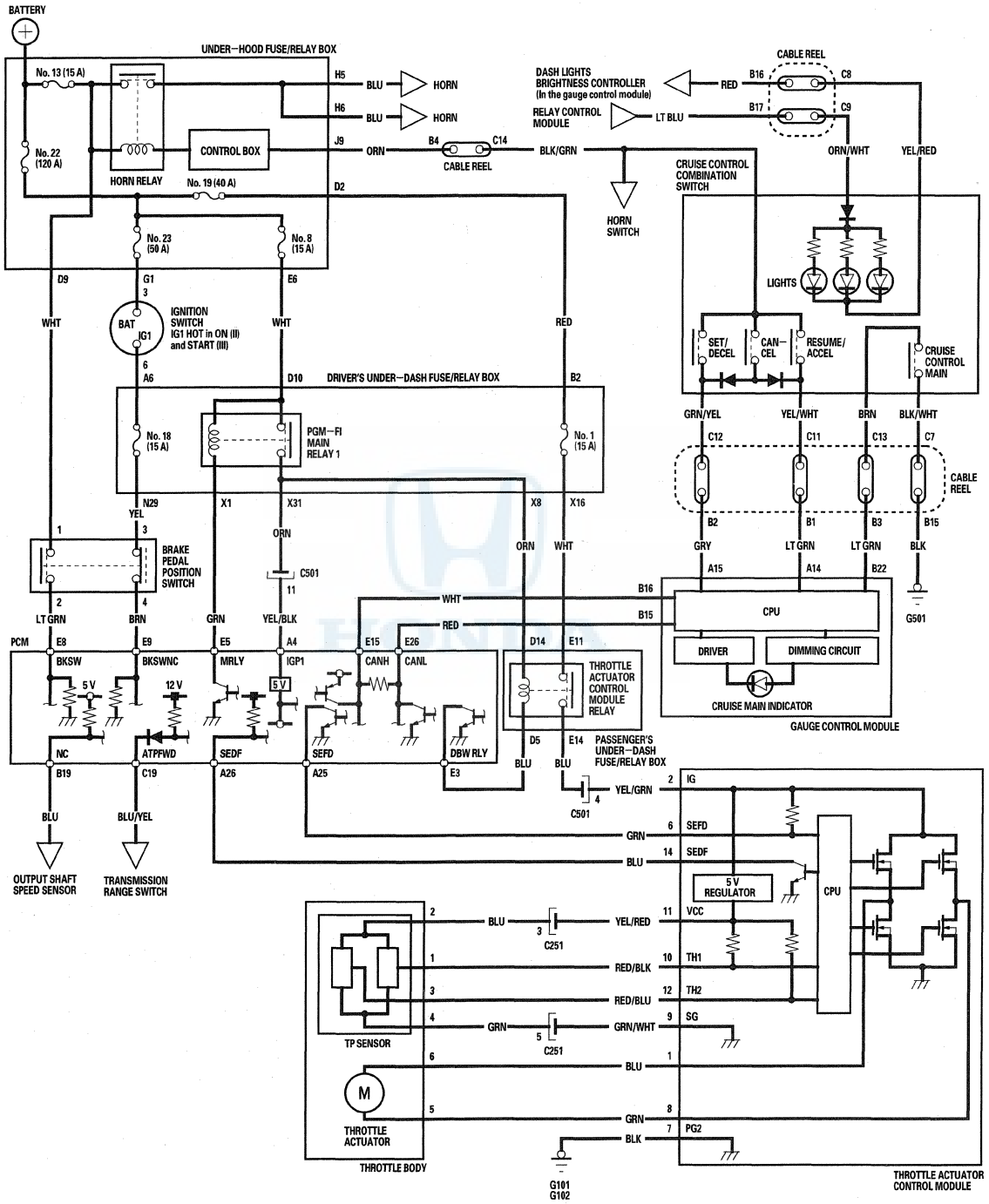

Cruise Control Input Test

1. Connect the Honda Diagnostic System (HDS) to the data link connector (DLC) (see step 2 on page 11-3).
2. Turn the ignition switch to ON (II).
3. Make sure the HDS communicates with the vehicle and the powertrain control module (PCM). If it doesn't communicate, troubleshoot the DLC circuit (see page 11-211).
4. Go to PGM-FI, and check for DTCs (see page 11-3).
5. Do the following tests while monitoring parameters in the PGM-FI DATA LIST with the HDS.

   NOTE: Intermittent failures are often caused by loose circuit connections. While monitoring cruise control inputs, flex their circuit wires, and note if any of the test results change.

Signal to be tested	Test condition	Parameter: Desired result	Possible cause if result is not obtained
Brake pedal position switch signal	Brake pedal pressed, then released	CRUISE BRAKE SW should indicate OFF when the brake pedal is pressed and ON when the brake pedal is released.	• Faulty brake pedal position switch • Blown No. 18 (15 A) fuse in the driver's under-dash fuse/relay box • An open in the wire between the PCM and the brake pedal position switch • A wire shorted to ground between the PCM and the brake pedal position switch
Transmission range switch signal	Shift lever in D and D3	SHIFT/CLUTCH SW should indicate OFF in P, R, and N and ON in D and D3.	• Faulty transmission range switch • An open in the wire between the PCM and the transmission range switch • A wire shorted to ground between the PCM and the transmission range switch • Poor ground G101 and G102
Cruise control main switch signal	Cruise control main button pressed and released	CRUISE CONTROL MAIN SW should indicate ON when the cruise control main button is pressed and OFF when the cruise control main button is released.	• Faulty cruise control combination switch • An open in the wire between the gauge control module and the cruise control combination switch • A wire shorted to ground between the gauge control module and the cruise control combination switch • An open in the wire between the cruise control combination switch and the ground – Faulty cable reel
Set switch signal	Set/decel button pressed and released	CRUISE CONTROL SET SW should indicate ON when the set/decel button is pressed and OFF when the set/decel button is released.	• Faulty cruise control combination switch • An open in the wire between the gauge control module and the cruise control combination switch • A wire shorted to ground between the gauge control module and the cruise control combination switch – Faulty cable reel

Signal to be tested	Test condition	Parameter: Desired result	Possible cause if result is not obtained
Resume switch signal	Resume/accel button pressed and released	CRUISE CONTROL RESUME SW should indicate ON when the resume/accel button is pressed and OFF when the resume/accel button is released.	• Faulty cruise control combination switch • An open in the wire between the gauge control module and the cruise control combination switch • A wire shorted to ground between the gauge control module and the cruise control combination switch – Faulty cable reel
Cancel switch signal	Cancel button pressed and released	CRUISE CONTROL CANCEL SW should indicate ON when the cancel button is pressed and OFF when the cancel button is released.	• Faulty cruise control combination switch • An open in the wire between the gauge control module and the cruise control combination switch • A wire shorted to ground between the gauge control module and the cruise control combination switch – Faulty cable reel
Cruise control indicator signal	Start the engine, press the cruise control main button on and drive the vehicle above 25 mph (40 km/h) with the cruise control set and cancel the cruise control	CRUISE INDICATOR should indicate ON when the cruise control is set and OFF when the cruise control is cancelled.	Faulty gauge control module

HONDA

Cruise Control Combination Switch Test/Replacement

There are SRS components located in this area. Review the SRS component locations (see page 24-12), and the precautions and procedures (see page 24-14), in the SRS before doing repairs or service.

1. Remove the driver's airbag (see page 24-197).
2. Disconnect the connectors, then remove the switch.

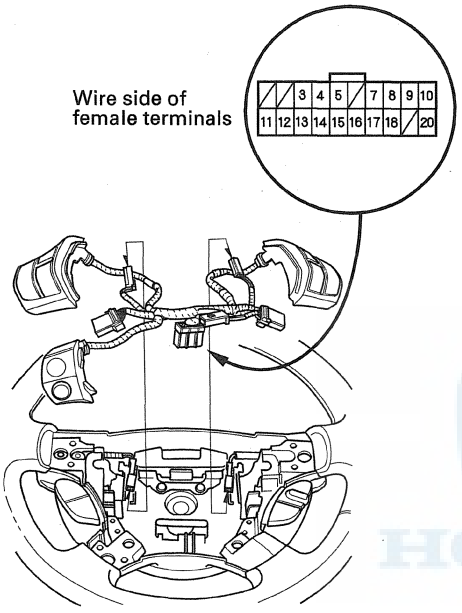

3. Check for continuity between the terminals in each switch position according to the table.
   - If there is continuity, and it matches the table, but switch failure occurred on the cruise control input test, check and repair the wire harness on the switch circuit.
   - If there is no continuity in one or both positions, replace the switch.

Terminal / Position	7	13	14		11	12
Cruise control main switch (ON)	○—○					
Cruise control main switch (OFF)						
Set/decel (PRESSED)			○			○
Resume/accel (PRESSED)			○		○	
Cancel (PRESSED)			○	▶	▶ ○	○

4. Use a diode tester between the terminals according to the chart. If the diode fails the test, replace the switch (see page 17-23).

9		8
○	▶| ⊗	○

Engine Mount Control System

Component Location Index

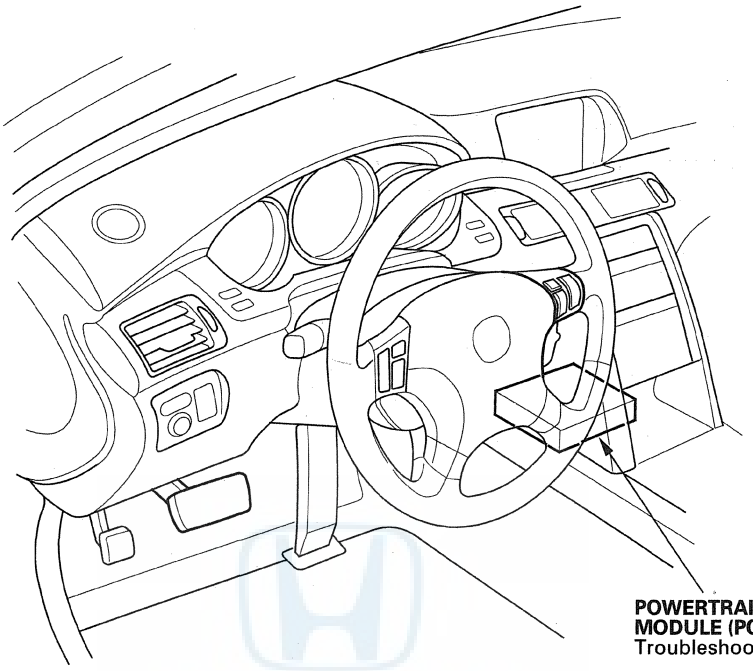

POWERTRAIN CONTROL MODULE (PCM)
Troubleshooting, page 4-51

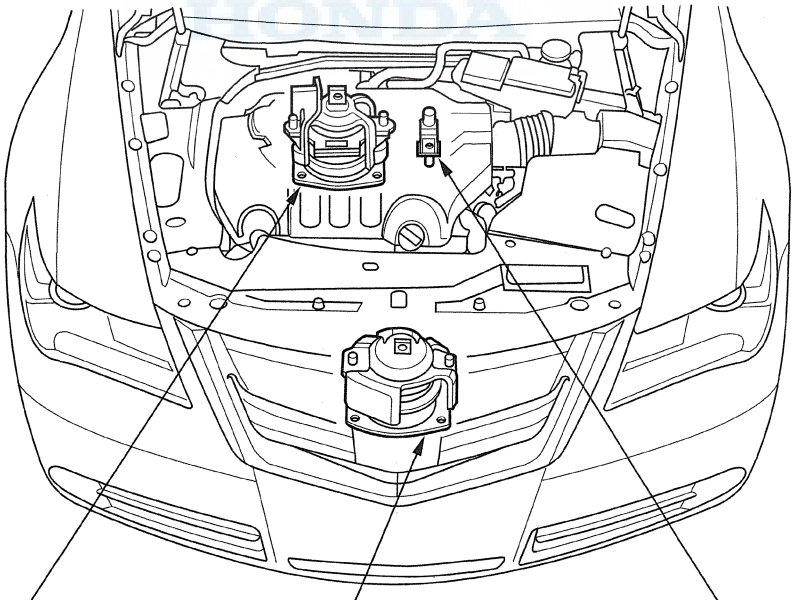

REAR ENGINE MOUNT
Replacement, page 5-23

FRONT ENGINE MOUNT
Replacement, page 5-23

ENGINE MOUNT CONTROL SOLENOID VALVE
Troubleshooting, page 4-51

Engine Mount Control System

Circuit Diagram

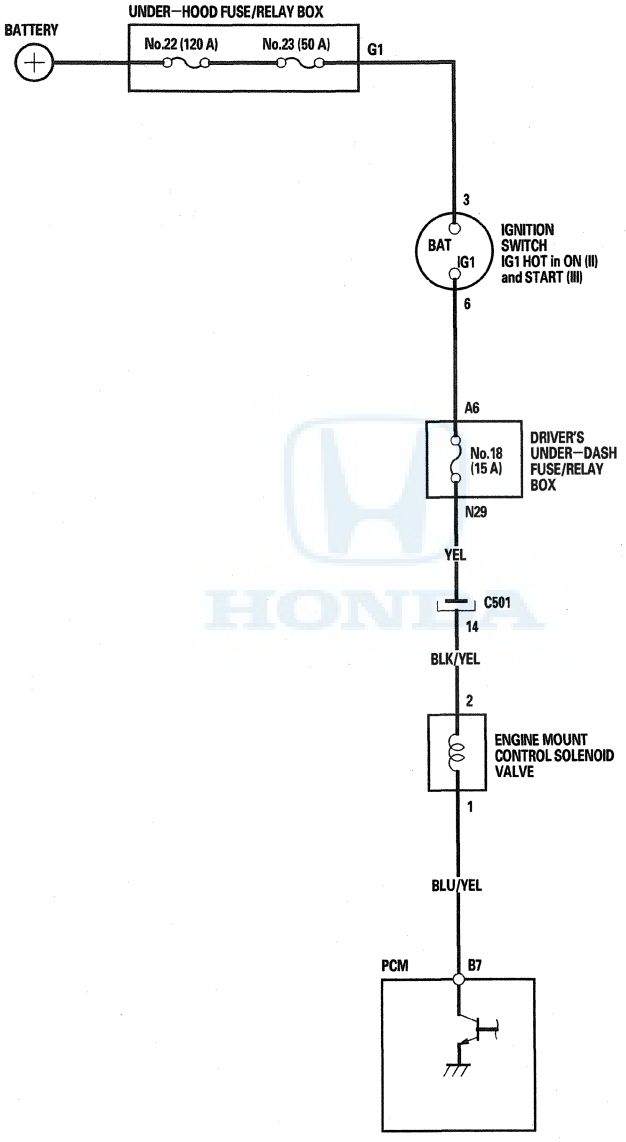

Troubleshooting

Special Tools Required
Vacuum pump/gauge, 0—30 in Hg
Snap-on YA4000A or equivalent, commercially available

NOTE: Check the vacuum hoses and lines for damage and proper connections before troubleshooting.

Follow this procedure if the engine vibrates excessively when idling.

1. Start the engine, and let it idle.
2. Raise the engine speed from idling to 2,000 rpm.
3. Check the MOUNT CTRL SOL in the PGM-FI DATA LIST with the Honda Diagnostic System (HDS).

   Is ON indicated at idling and OFF indicated at 2,000 rpm?

   YES—Go to step 4.

   NO—Update the powertrain control module (PCM) if it does not have the latest software (see page 11-230), or substitute a known-good PCM (see page 11-7), then recheck. If the engine mount control system works properly, and the PCM was updated, the troubleshooting is complete. If the PCM was substituted, replace the original PCM (see page 11-232). ■
4. Turn the ignition switch to LOCK (0).
5. Disconnect the engine mount control solenoid valve 2P connector from the engine mount control solenoid valve.
6. Turn the ignition switch to ON (II).
7. Measure the voltage between engine mount control solenoid valve 2P connector terminal No. 2 and body ground.

ENGINE MOUNT CONTROL SOLENOID VALVE 2P CONNECTOR

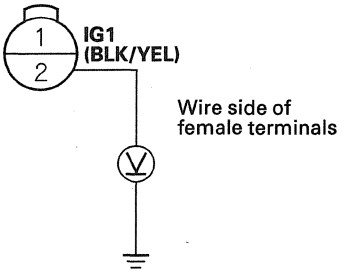

Is there battery voltage?

YES—Go to step 8.

NO—Repair an open in the wire between engine mount control solenoid valve 2P connector terminal No. 2 and No. 18 (15 A) fuse in the driver's under-dash fuse/relay box. ■

8. Start the engine, and let it idle.

(cont'd)

Troubleshooting (cont'd)

9. Measure the voltage between engine mount control solenoid valve 2P connector terminals No. 1 and No. 2, with the engine at idle.

ENGINE MOUNT CONTROL SOLENOID VALVE 2P CONNECTOR

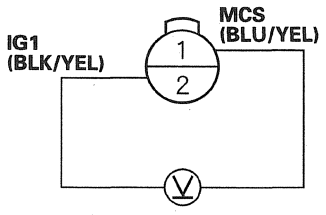

Wire side of female terminals

Is there battery voltage?

YES—Go to step 10.

NO—Repair an open in the wire between PCM (B7) and the engine mount control solenoid valve 2P connector terminal No. 1. If the wire is OK, update the PCM if it does not have the latest software (see page 11-230), or substitute a known-good PCM (see page 11-7), and recheck. If the engine mount control system works properly, and the PCM was updated, the troubleshooting is complete. If the PCM was substituted, replace the original PCM (see page 11-232).■

10. Raise the engine speed above 1,000 rpm.

11. Measure the voltage between engine mount control solenoid valve 2P connector terminals No. 1 and No. 2.

ENGINE MOUNT CONTROL SOLENOID VALVE 2P CONNECTOR

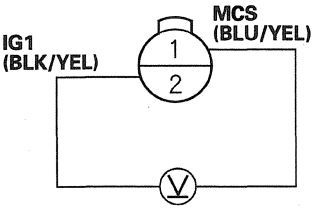

Wire side of female terminals

Is there battery voltage?

YES—Repair a short to body ground in the wire between PCM (B7) and the engine mount control solenoid valve. If the wire is OK, update the PCM if it does not have the latest software (see page 11-230), or substitute a known-good PCM (see page 11-7), and recheck. If the engine mount control system works properly, and the PCM was updated, the troubleshooting is complete. If the PCM was substituted, replace the original PCM (see page 11-232).■

NO—Go to step 12.

12. Turn the ignition switch to LOCK (0).

13. Disconnect the vacuum hose (A) from the engine mount control solenoid valve (B), and connect a vacuum pump/gauge, 0—30 in Hg, to the hose. Apply about 20 in Hg of vacuum, and wait for 20 seconds.

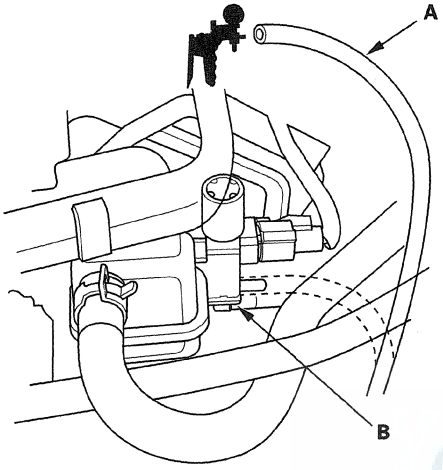

Does the engine mount hold vacuum?

YES—Go to step 14.

NO—Either the vacuum hose or one of the engine mounts has a vacuum leak. Repair as needed. ■

14. Release the vacuum, then apply vacuum again.

Is there a noticeable change in idle smoothness with and without vacuum applied?

YES—Go to step 15.

NO—Replace the front engine mount. ■

15. Connect a vacuum pump/gauge, 0—30 in Hg, to the engine mount control solenoid valve (A).

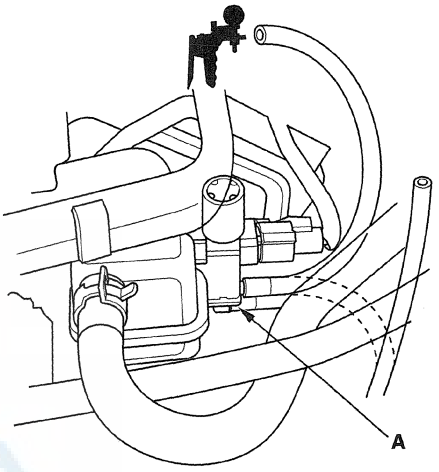

Is there manifold vacuum at idle, and a decrease in manifold vacuum when you raise the engine speed above 1,000 rpm?

YES—The system is OK. ■

NO—Replace the engine mount control solenoid valve. ■

Engine Mechanical



Engine Assembly

Special Tools 5-2
Engine Removal 5-3
Engine Installation 5-12
Engine Mount Replacement 5-23

Cylinder Head **6-1**

Engine Block **7-1**

Engine Lubrication **8-1**

Intake Manifold and Exhaust System **9-1**

Engine Assembly

Special Tools

Ref. No.	Tool Number	Description	Qty
①	070AG-SJAA10S	Subframe Alignment Pin	1

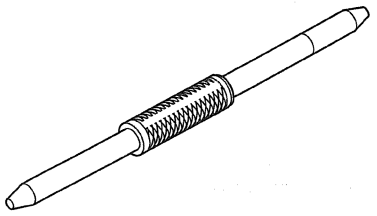

①

Engine Removal

Special Tools Required
- 2008 V6 Attachment arm SIL02C000033 *
- Front subframe adapter VSB02C000016 *
- Engine support hanger, A and Reds AAR-T1256 *
- Engine hanger balance bar VSB02C000019 *

*: Available through the Acura Tool and Equipment program, 888-424-6857.

NOTE:
- Use fender covers to avoid damaging painted surfaces.
- To avoid damage, unplug the wiring connectors carefully while holding the connector portion.
- Mark all wiring and hoses to avoid misconnection. Also, be sure that they do not contact other wiring, hoses, or interfere with other parts.

1. Disconnect the support struts from both sides of the pivot ball (bolted to the hood). Secure the hood in a vertical position. Remove the right side pivot ball and install it into the lower threaded hole, then reattach the support strut.

   NOTE: Do not attempt to close the hood with the support strut in the vertical position, as it will damage the support strut and hood.

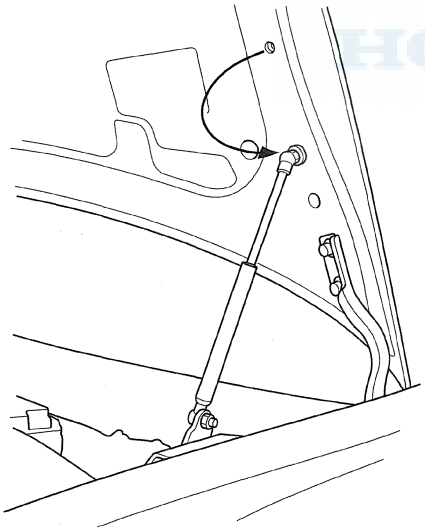

2. Relieve the fuel pressure (see page 11-332).
3. Drain the power steering system fluid, then plug the fluid reservoir and return hose (see page 17-13).
4. Do the battery removal procedure (see page 22-92).
5. Remove the engine cover.

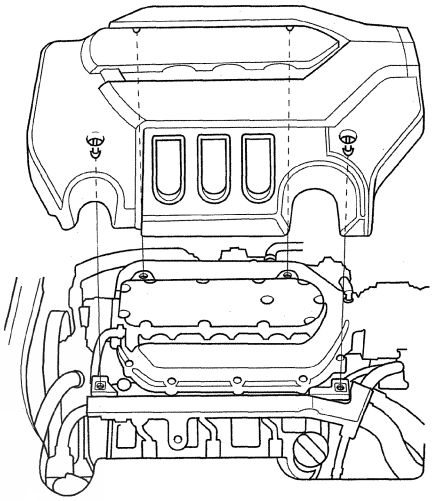

6. Remove the right upper fender trim, the battery trim, the left upper fender trim, the upper grille cover (see page 20-163), and the cowl cover (see page 20-164).
7. Remove the air cleaner (see page 11-366).
8. Remove the air intake duct cover.

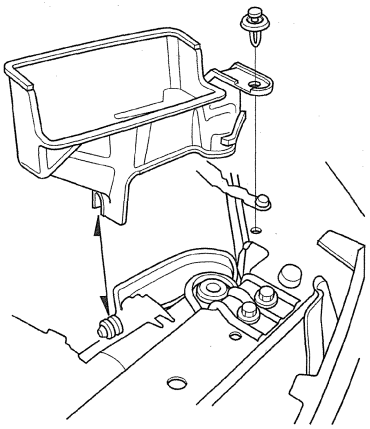

(cont'd)

Engine Removal (cont'd)

9. Remove the harness clamp (A) from the battery base (B).

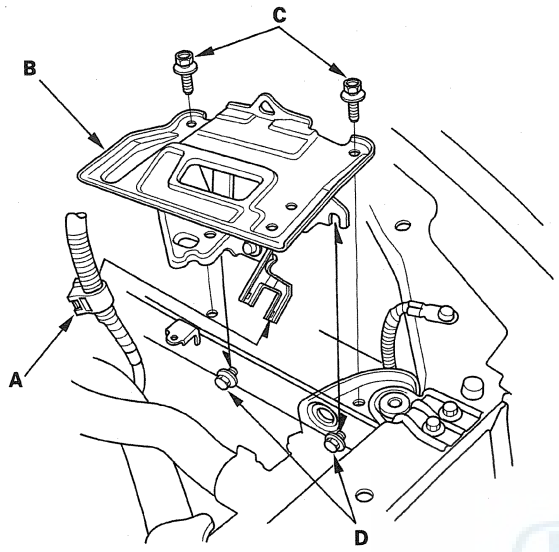

10. Remove the two upper bolts (C), and loosen the two lower bolts (D), then remove the battery base.

11. Remove the harness clamps (A), the starter cable (B), and the ground cable (C).

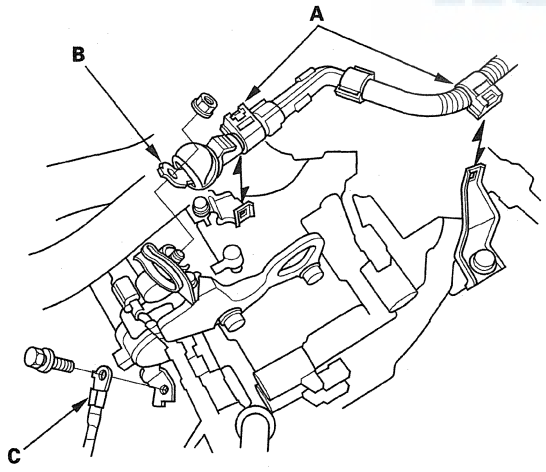

12. Remove the battery cable (A) from the under-hood fuse/relay box.

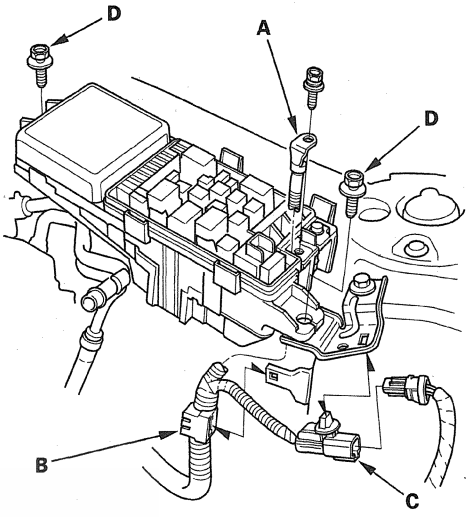

13. Remove the harness clamp (B), then disconnect the harness connector (C).

14. Remove the two bolts (D) securing the under-hood fuse/relay box, then remove the under-hood fuse/relay box.

15. Remove the harness clamp (A), and disconnect the engine wire harness connectors (B) on the left side of the engine compartment.

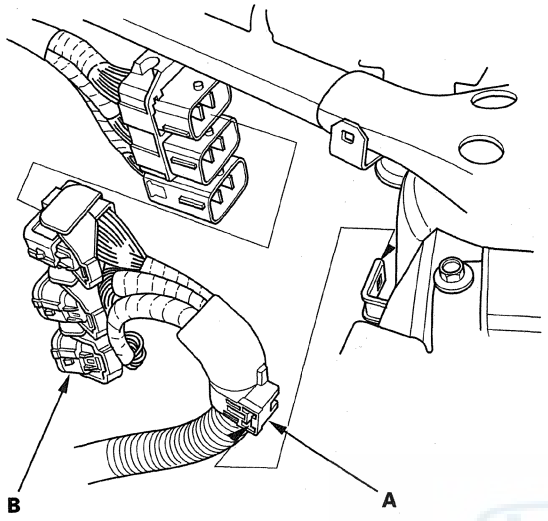

16. Remove the connector (A) and the transfer breather hose (B), then remove the strut brace (C).

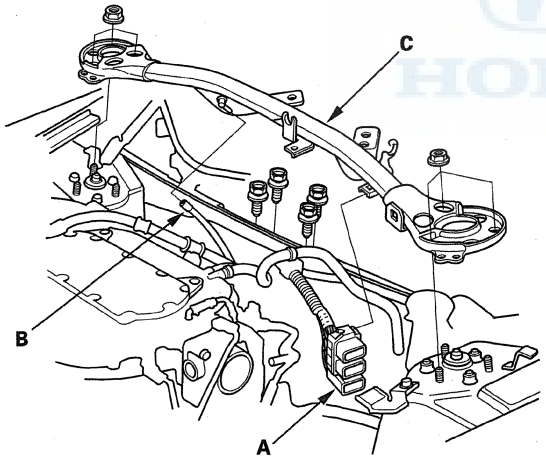

17. Remove the quick-connect fitting cover (A), then disconnect the fuel feed hose (B) (see page 11-341).

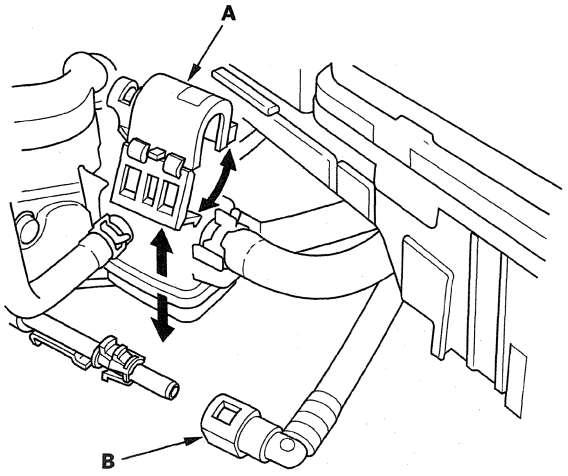

18. Disconnect the brake booster vacuum hose (A) and the evaporative emission (EVAP) canister hose (B).

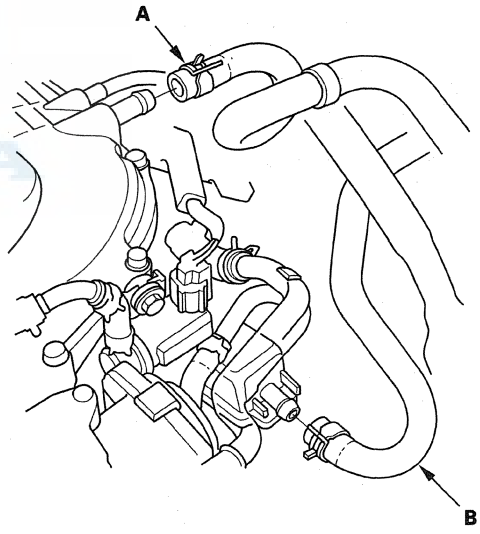

19. Remove the shift cable (see page 14-235).

20. Remove the drive belt (see page 4-33).

(cont'd)

Engine Removal (cont'd)

21. Remove the power steering (P/S) pump outlet line (A) from the P/S pump, then plug the outlet line and the P/S pump.

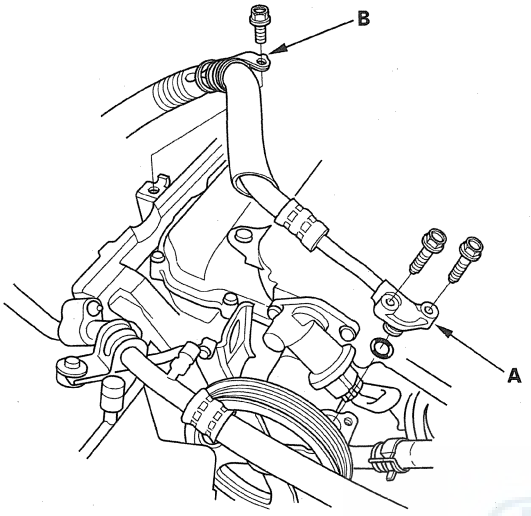

22. Remove the P/S hose clamp (B).

23. Remove the power steering system fluid reservoir from the clamp.

24. Remove the heat shield.

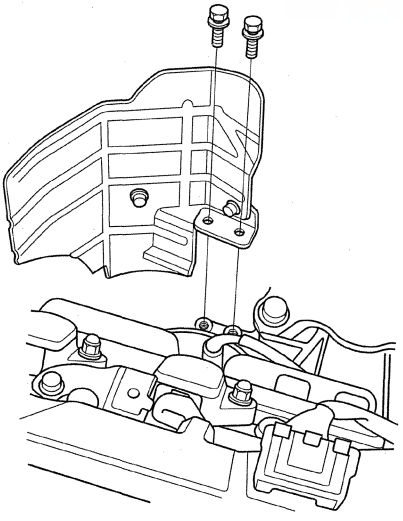

25. Remove the steering wheel (see page 17-22).

26. Remove the steering joint cover (A).

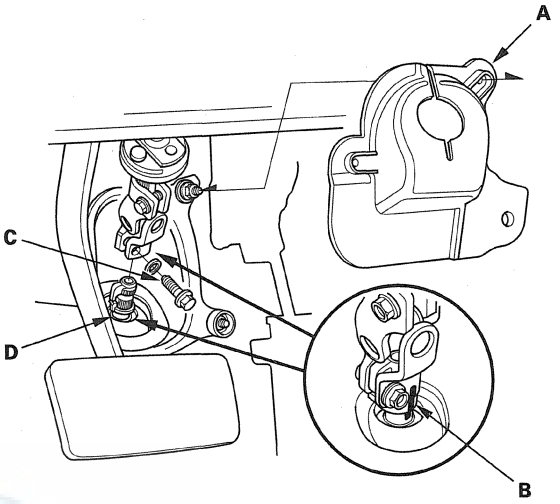

27. Make a reference mark (B) across the steering joint and the steering gearbox pinion shaft. Remove the steering joint bolt (C), and disconnect the steering joint from the steering gearbox pinion shaft (D).

28. Remove the radiator cap.

29. Raise the vehicle on the lift to full height.

30. Remove the front wheels.

31. Remove the splash shield.

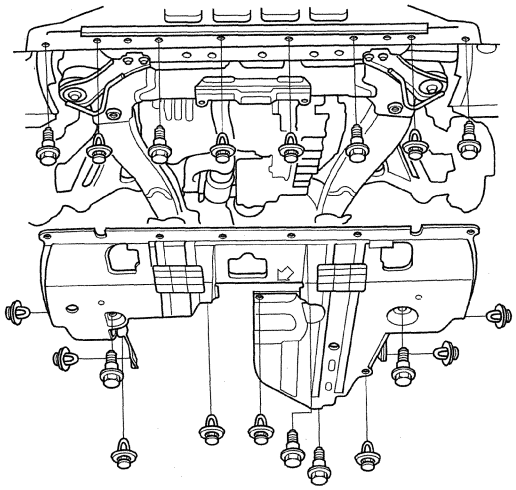

32. Loosen the drain plug in the radiator, and drain the engine coolant (see page 10-6).

33. Drain the automatic transmission fluid (ATF) (see page 14-196).

34. Drain the engine oil (see page 8-11).

35. Disconnect the stabilizer links from the stabilizer bar (see page 18-19).

36. Remove the damper fork (see page 18-21).

37. Separate the tie-rod end ball joints from the knuckles (see step 14 on page 17-36).

38. Separate the knuckles from the lower arms (see page 18-17).

39. Remove the driveshafts (see step 10 on page 16-6). Coat all precision-finished surfaces with clean engine oil. Tie plastic bags over the driveshaft ends.

40. Remove the exhaust pipe assembly.

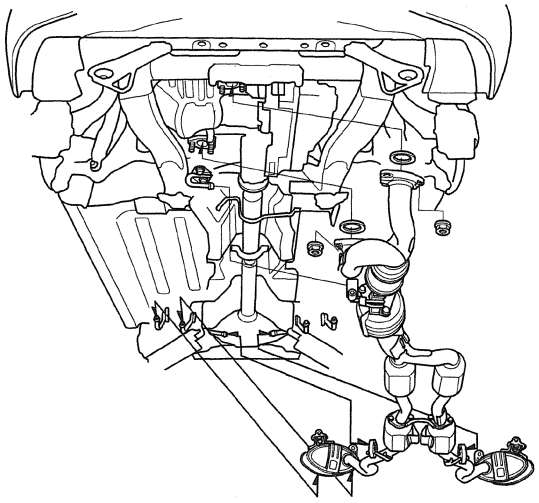

41. Remove the propeller shaft (see page 16-44).

42. Remove the transfer assembly (see page 14-199).

43. Disconnect the ATF cooler hoses from the transmission (see step 35 on page 14-205).

44. Disconnect the P/S hose, then plug the line and the hose.

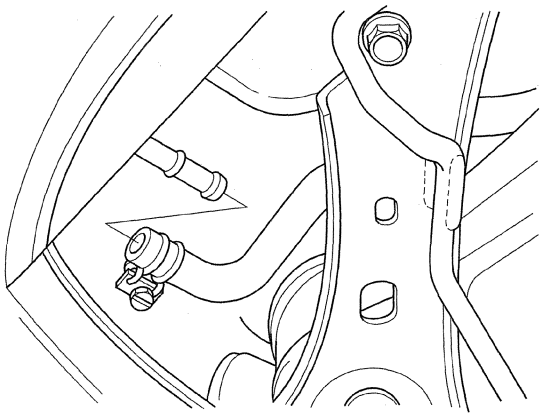

(cont'd)

Engine Removal (cont'd)

45. Disconnect the power steering pressure switch connector.

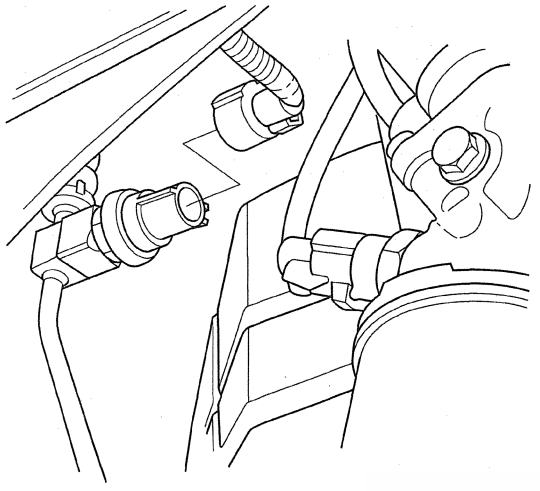

46. Disconnect the connector from the steering gearbox.

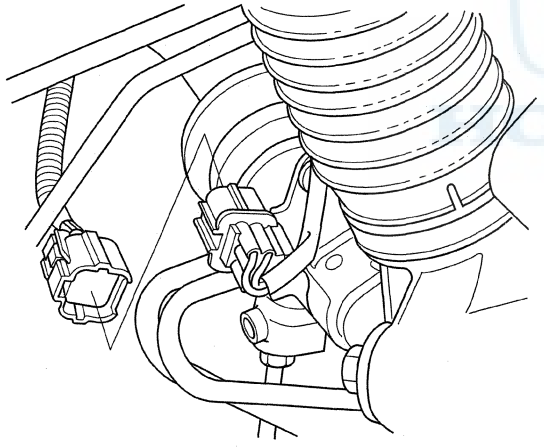

47. Remove the bolts securing the transmission lower mount.

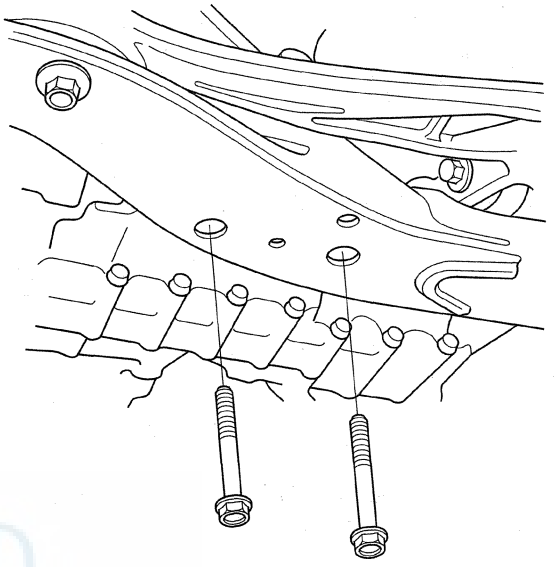

48. Lower the vehicle on the lift.

49. Disconnect the upper radiator hose (A) and the lower radiator hose (B).

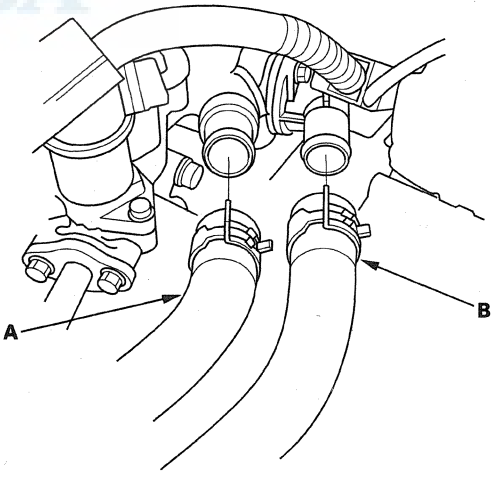

50. Disconnect the heater hoses.

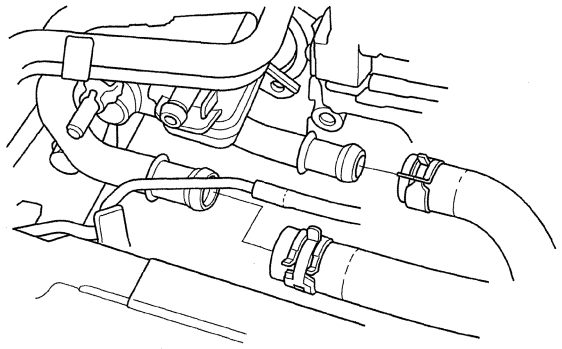

51. Remove the radiator (see page 10-14).

52. Remove the four bolts securing the A/C compressor.

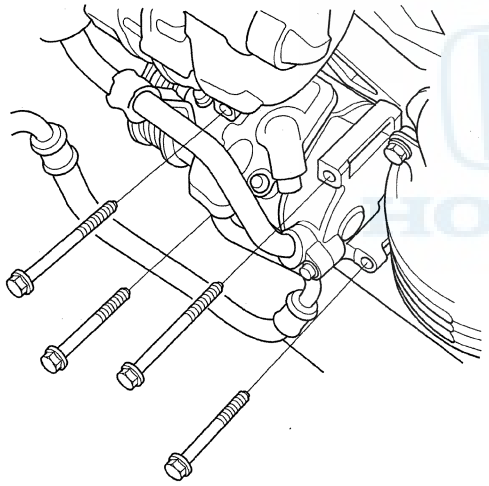

53. Remove the connector bracket from the front cylinder head; use the bracket bolt hole to attach the engine balance bar front arm.

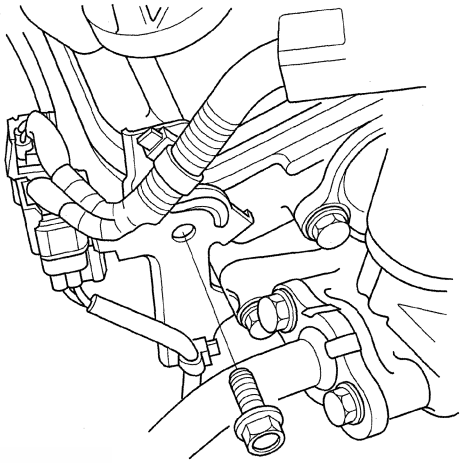

54. Remove the engine mount control solenoid valve bracket from the rear cylinder head; use the bracket bolt hole to attach the 2008 V6 attachment arm (SIL02C000033).

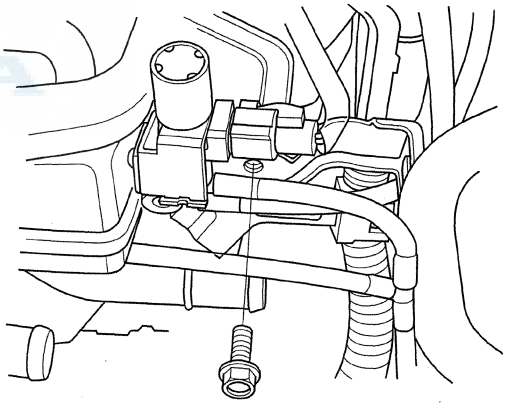

(cont'd)

Engine Removal (cont'd)

55. Lift and support the engine with the engine support hanger (AAR-T1256) and engine balance bar (VSB02C000019). Attach the front arm (A) to the front cylinder head with a spacer (B) and the 10 x 1.25 mm bolt (C). Remove the rear arm from the balance bar, and install the 2008 V6 attachment arm (SIL02C000033), then attach the 2008 V6 attachment arm to the rear cylinder head with the 8 x 1.25 mm bolt (D).

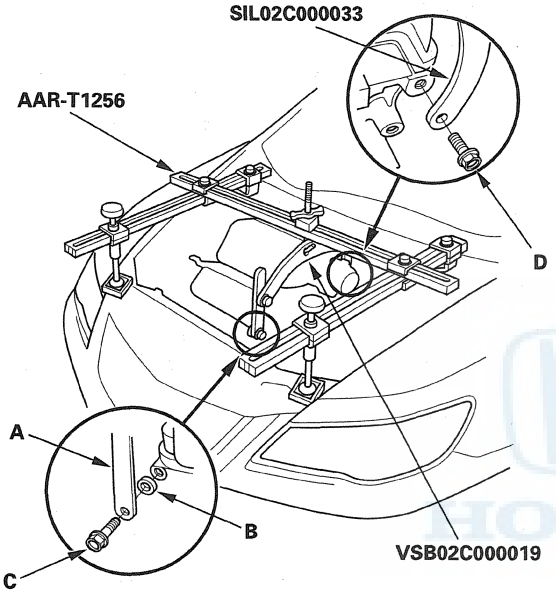

56. Disconnect the vacuum hose (A), then remove the front mount stop (B) and the front mount bolt (C).

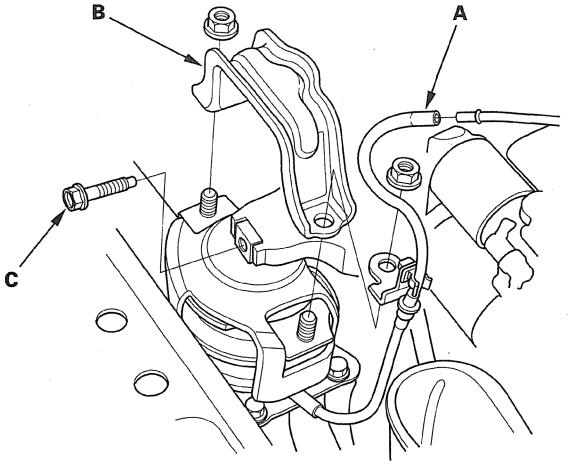

57. Disconnect the vacuum hose (A), then remove the rear mount stop (B) and the rear mount bolt (C).

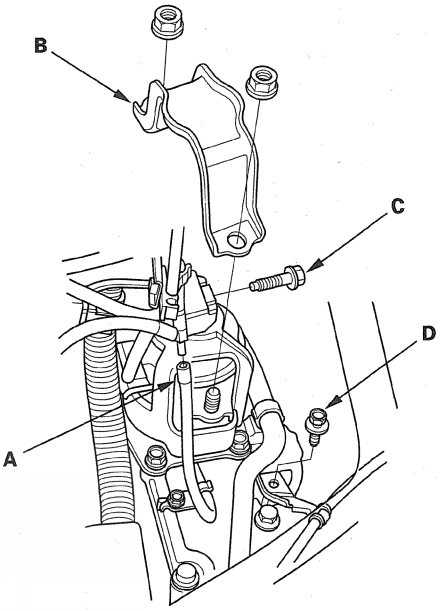

58. Remove the bolt (D) securing the shift cable bracket.

59. Raise the vehicle on the lift to full height.

60. Attach the front subframe adapter to the subframe by hanging the belt (A) over the front of the subframe (B), then secure the belt with its stop (C).

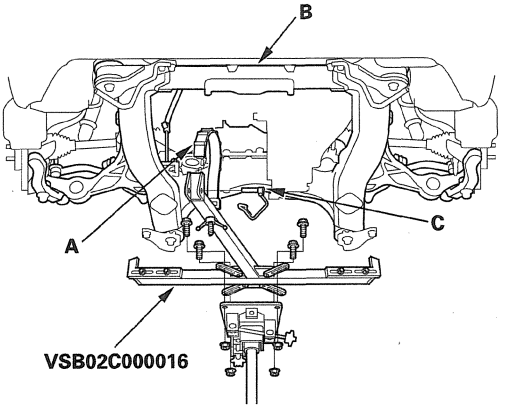

61. Raise the jack and line up the slots in the special tool arms with the bolt holes on the jack base, then securely attach them with four bolts.

62. Remove the subframe.

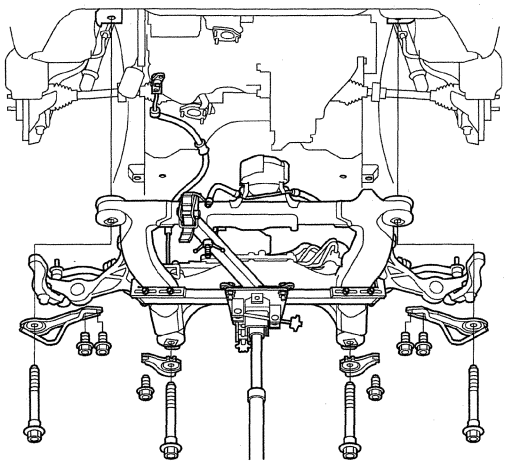

63. Lower the vehicle and attach a chain hoist (A) to the engine hook (B) and transmission hook (C). Lift up the engine/transmission assembly until it's securely supported by the chain hoist. Remove the engine support hanger then the engine balance bar from the engine and vehicle.

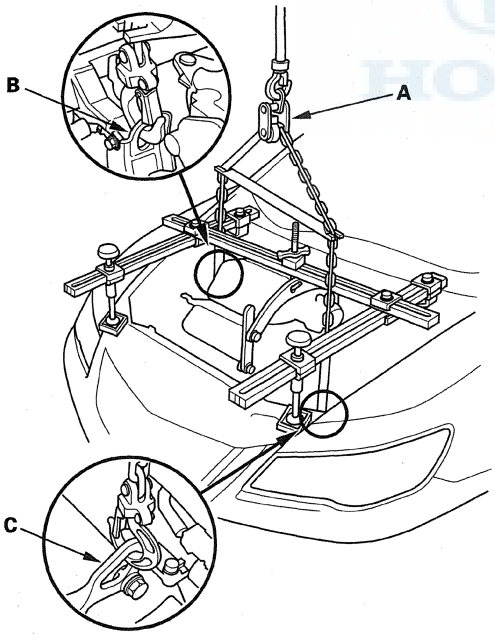

64. Remove the two bolts securing the upper engine mount bracket.

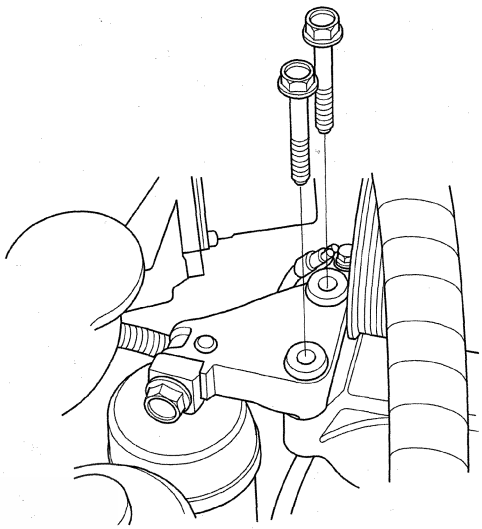

65. Check that the engine/transmission is completely free of vacuum hoses, fuel hoses, coolant hoses, and electrical wiring.

66. Slowly lower the engine/transmission assembly about 150 mm (6 in). Check once again that all hoses and electrical wiring are disconnected and free from the engine/transmission, then lower it all the way.

67. Disconnect the chain hoist from the engine/transmission assembly.

68. Raise the vehicle all the way, then remove the engine/transmission assembly from under the vehicle.

Engine Assembly

Engine Installation

Special Tools Required
- Subframe alignment pin 070AG-SJAA10S
- 2008 V6 Attachment arm SIL02C000033 *
- Front subframe adapter VSB02C000016 *
- Engine support hanger, A and Reds AAR-T1256 *
- Engine hanger balance bar VSB02C000019 *

* : Available through the Acura Tool and Equipment program, 888-424-6857.

1. Install the accessory brackets and tighten their bolts to the specified torque.

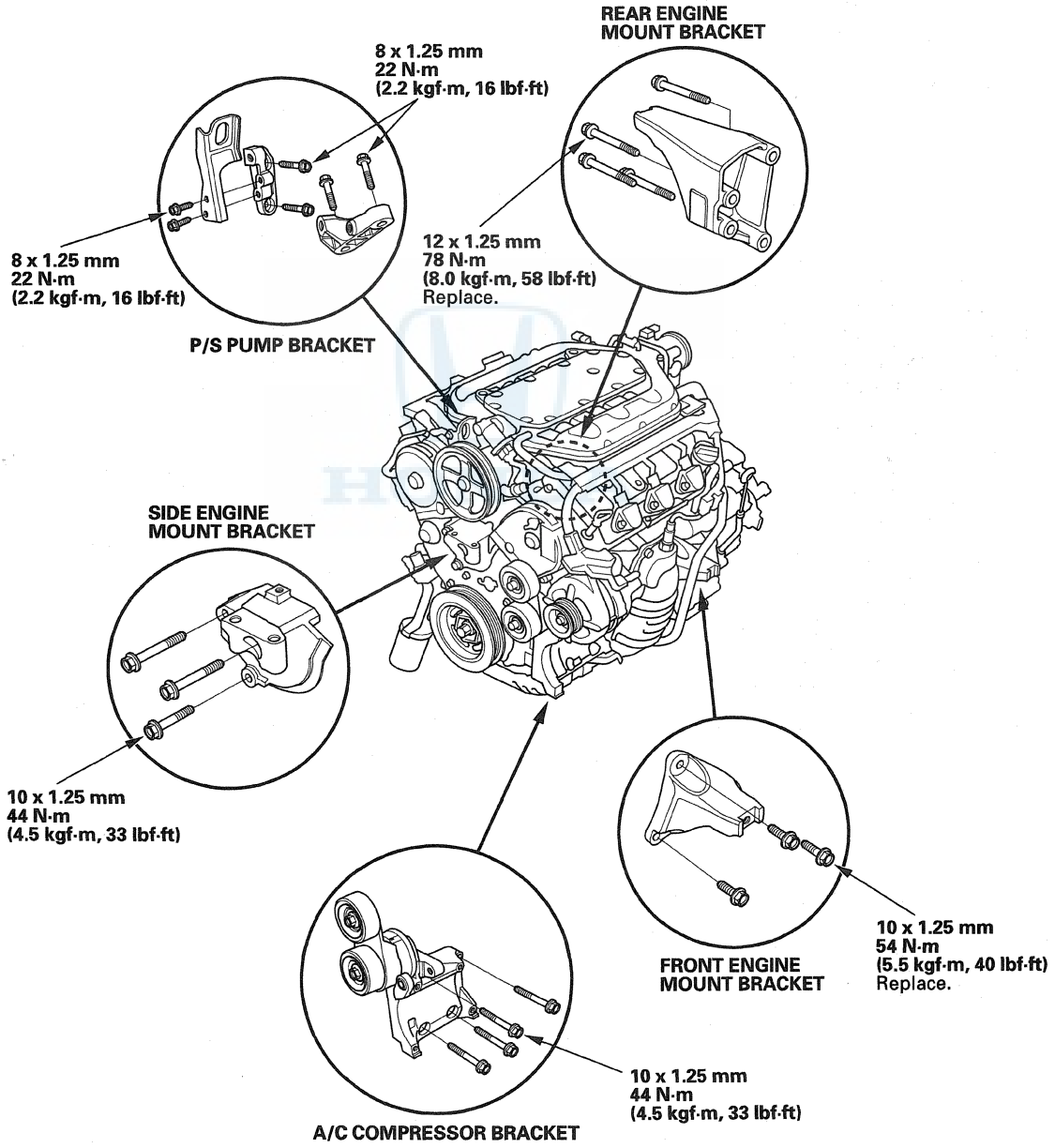

2. Position the engine/transmission assembly under the vehicle. Be sure that they are properly aligned. Carefully lower the vehicle until the engine and transmission are properly positioned in the engine compartment. Make sure the vehicle is not resting on any part of the engine or transmission. Lift and support the engine with a chain hoist (A) and carefully raise the engine/transmission assembly into place.

   NOTE: Reinstall the mounting bolts/support nuts in the sequence given in the following steps. Failure to follow this sequence may cause excessive noise and vibration, and reduce engine mount life.

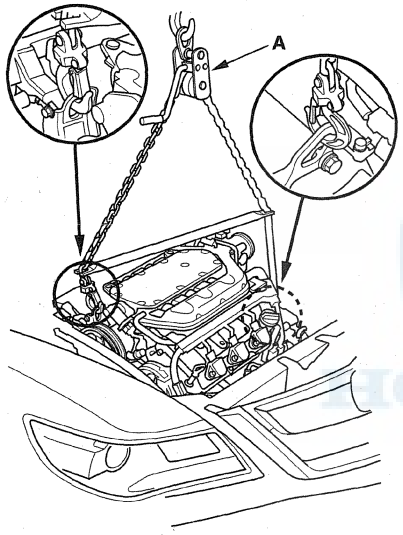

3. Install two new bolts securing the upper engine mount bracket. Tighten the bolts to the specified torque.

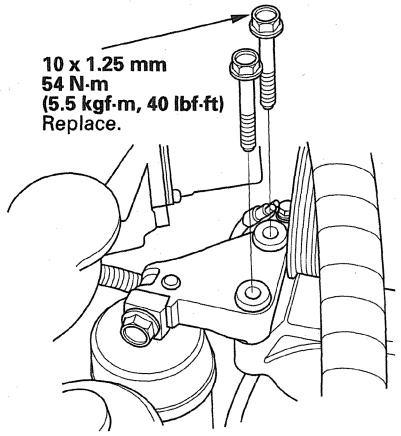

4. Install the engine balance bar (VSB02C000019); attach the front arm (A) to the front cylinder head with a spacer (B) and 10 x 1.25 mm bolt (C), remove the rear arm from the balance bar, and install the 2008 V6 attach arm (SIL02C000033), then attach the 2008 V6 attachment arm to the rear cylinder head with the 8 x 1.25 mm bolt (D).

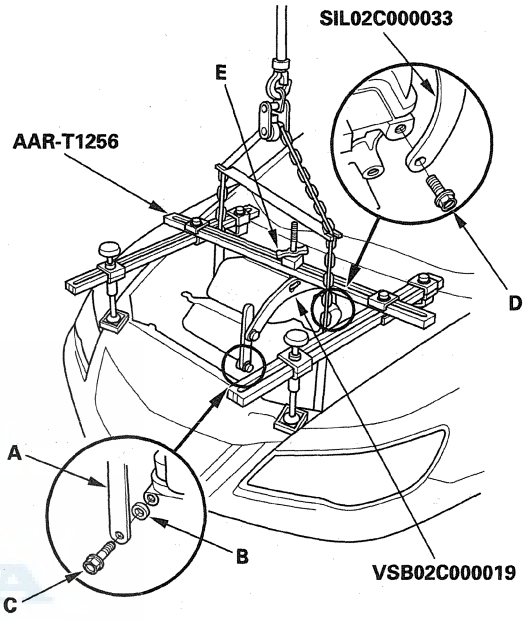

5. Install the engine support hanger (AAR-T1256) to the vehicle, and attach the hook to the slotted hole in the engine balance bar. Tighten the wing nut (E) by hand to lift and support the engine/transmission assembly.

6. Remove the chain hoist, then raise the vehicle on the lift to full height.

(cont'd)

Engine Installation (cont'd)

7. Attach the front subframe adapter to the subframe by hanging the belt (A) over the front of the subframe (B), then secure the belt with its stop (C). Raise the subframe up to the body with a jack.

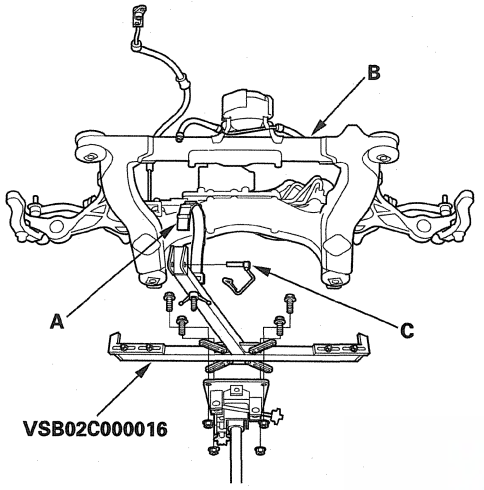

8. Loosely install the four subframe mounting bolts (A), four 10 x 1.25 mm bolts (B), and two 12 x 1.25 mm bolts (C) with the stiffeners.

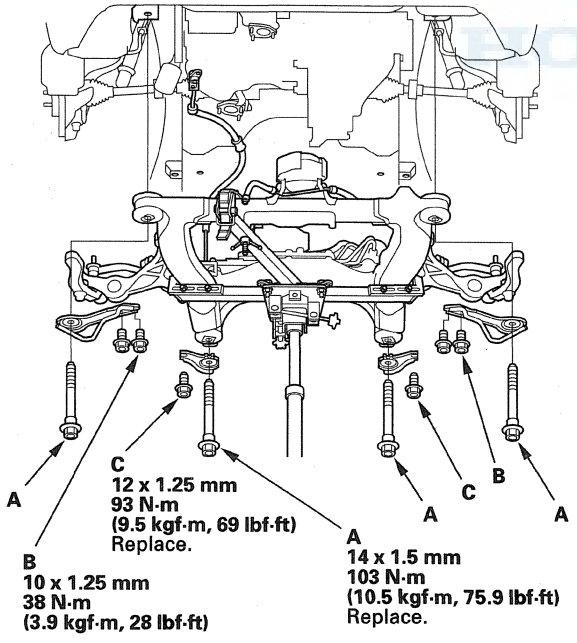

9. Insert the subframe alignment pin through the positioning slot (A) on the right rear stiffener, through the positioning hole (B) on the subframe, and into the positioning hole (C) on the body, then loosely tighten the subframe right rear mounting bolt.

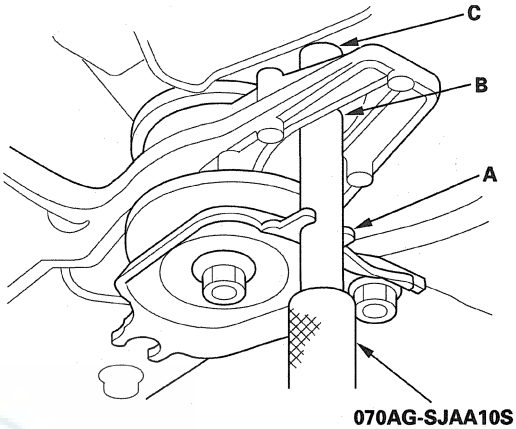

10. Insert the subframe alignment pin through the positioning slot on the left rear stiffener, through the positioning hole on the subframe, and into the positioning hole on the body, then loosely tighten the subframe left rear mounting bolt.
11. Loosely tighten the subframe right/left front mounting bolts.
12. Loosen the subframe right rear mounting bolt, then retighten the subframe right rear mounting bolt to the specified torque.
13. Tighten the subframe left rear mounting bolt to the specified torque.
14. Tighten the subframe right/left front mounting bolts to the specified torque.
15. Check that the positioning slots on the right/left rear stiffener, the positioning holes on the subframe, and the positioning holes on the body are aligned using the special tool.
16. Tighten the stiffener mounting bolts to the specified torque.
17. Remove the jack and front subframe adapter.

18. Tighten the bolts securing the transmission lower mount.

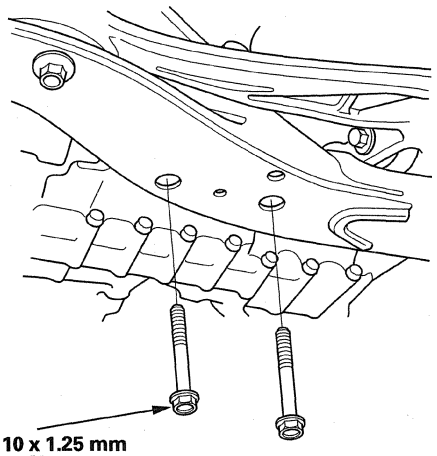

10 x 1.25 mm
44 N·m
(4.5 kgf·m, 33 lbf·ft)
Replace.

19. Lower the vehicle on the lift, then remove the engine hanger and balance bar.

20. Install the shift cable and tighten the bolt (A) securing the shift cable bracket.

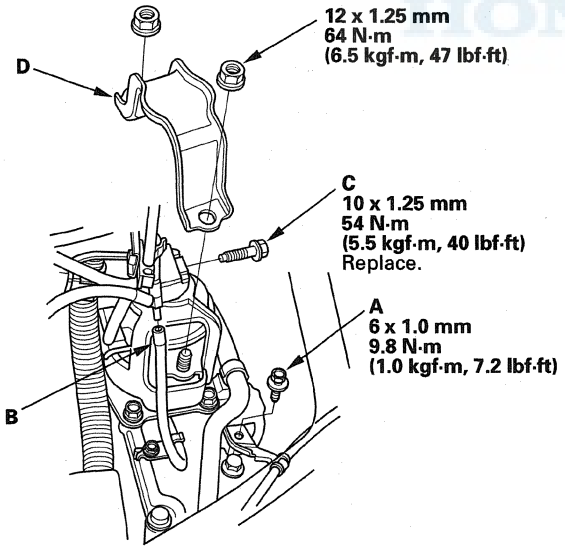

21. Install the vacuum hose (B).

22. Tighten the rear mount bolt (C), then install the rear mount stop (D).

23. Install the vacuum hose (A).

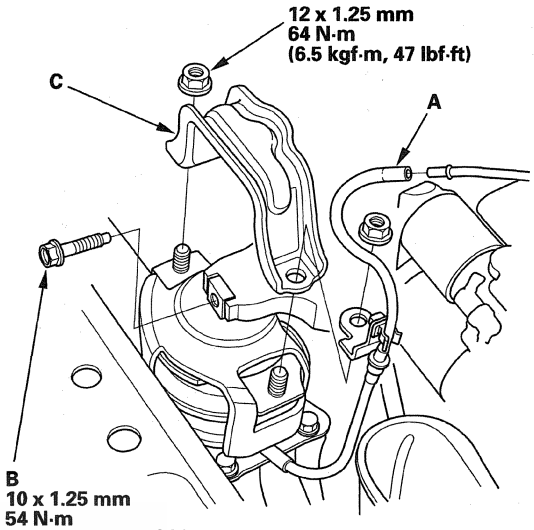

24. Tighten the front mount bolt (B), then install the front mount stop (C).

25. Loosen the mounting bolts for the upper engine mount bracket, then retighten them to the specified torque.

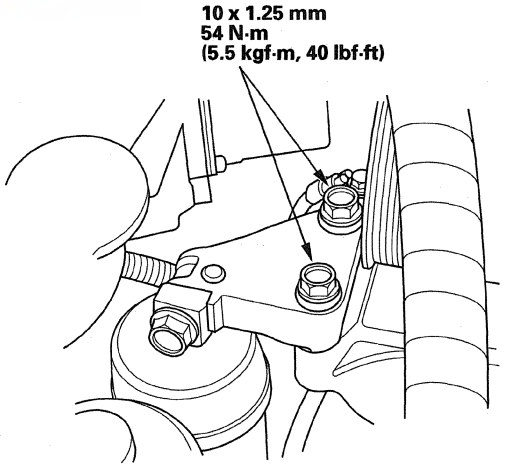

(cont'd)

Engine Installation (cont'd)

26. Raise the vehicle on the lift to full height.

27. Connect the power steering pressure switch connector.

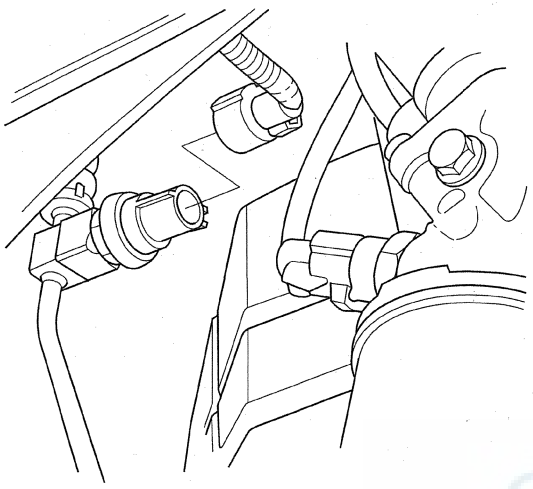

28. Connect the connector to the steering gearbox.

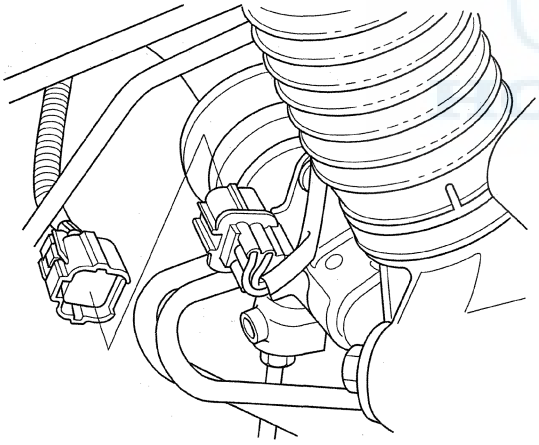

29. Install the power steering (P/S) hose.

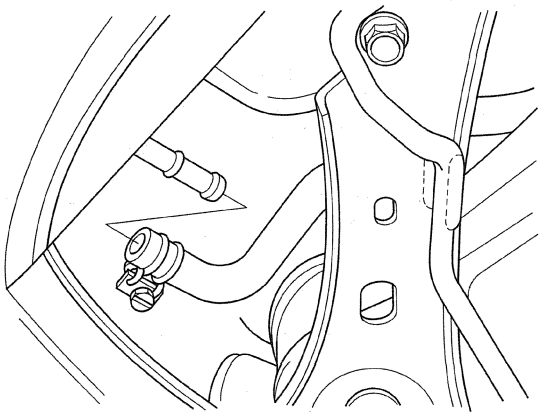

30. Install the transfer assembly (see page 14-200).

31. Install the propeller shaft (see page 16-45).

32. Install the ATF cooler hoses to the transmission (see page 14-229).

33. Install the exhaust pipe assembly (A) using new gaskets (B) and new self-locking nuts (C).

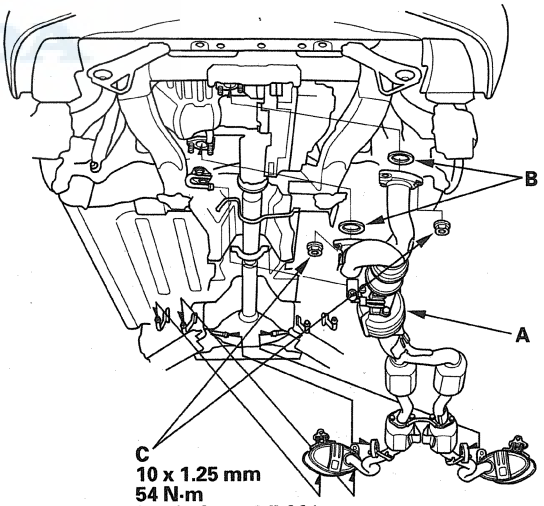

34. Install a new set ring on the end of each driveshaft, then install the driveshafts. Make sure each ring "clicks" into place in the differential and intermediate shaft.

35. Connect the suspension lower arm to the knuckles (see page 18-17).

36. Connect the tie-rod end ball joints to the knuckles (see step 23 on page 17-61).

37. Install the damper fork (see page 18-22).

38. Connect the stabilizer links to the stabilizer bar (see page 18-19).

39. Install the splash shield.

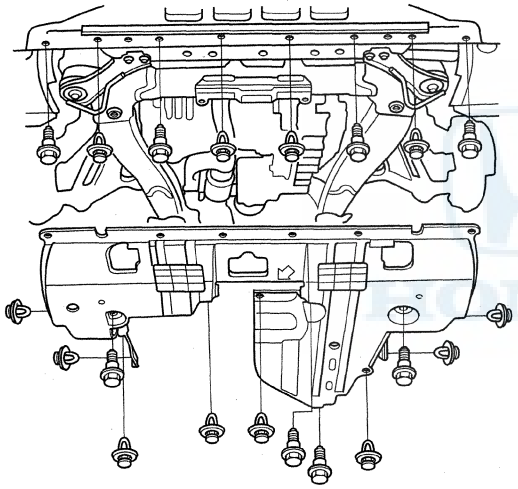

40. Install the front wheels.

41. Lower the vehicle on the lift.

42. Install the A/C compressor.

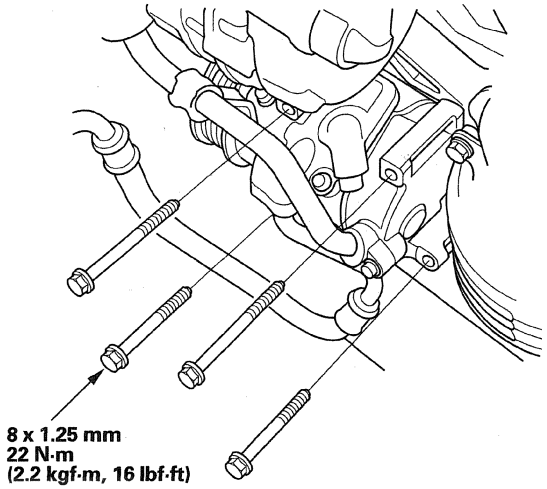

43. Install the radiator (see page 10-14).

44. Install the heater hoses.

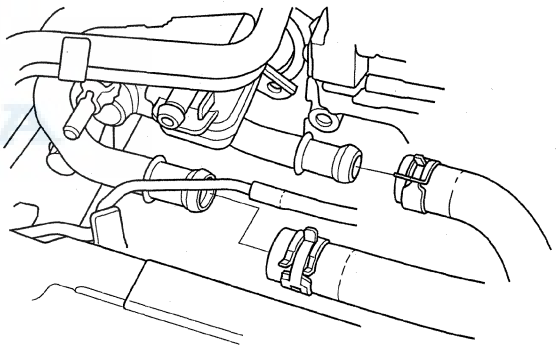

(cont'd)

Engine Installation (cont'd)

45. Install the upper radiator hose (A) and the lower radiator hose (B).

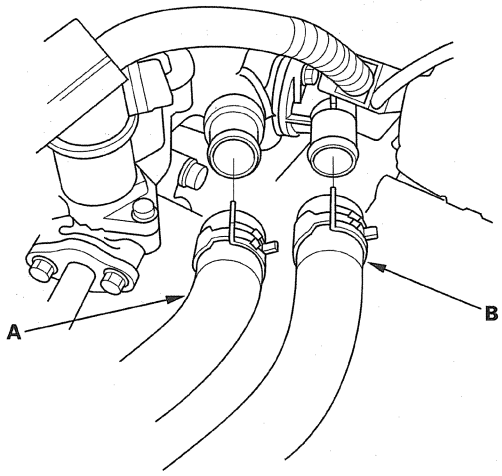

46. Install the connector bracket to the front cylinder head.

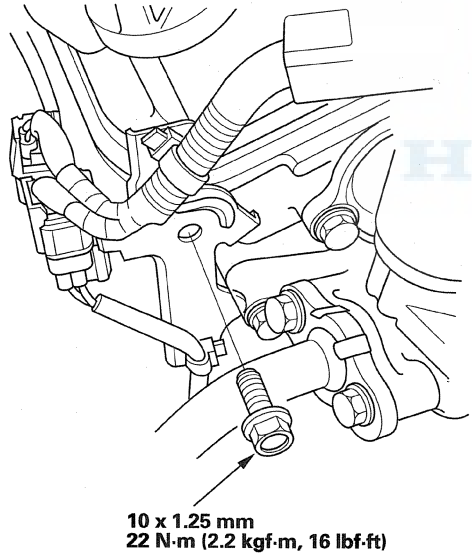

47. Install the engine mount control solenoid valve bracket to the rear cylinder head.

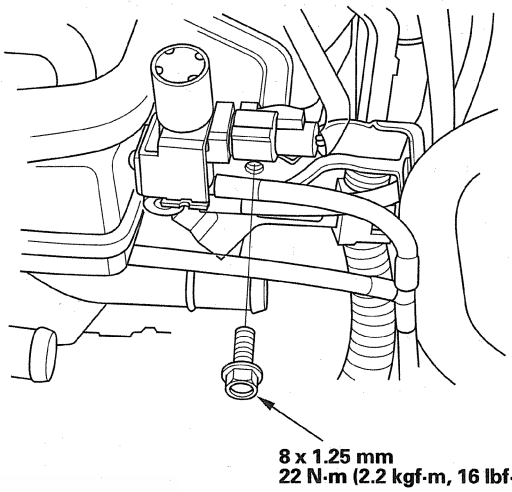

48. Align the reference mark (A) on the steering joint and steering gearbox pinion shaft. Connect the steering joint (B) to the steering gearbox pinion shaft (C). Tighten the steering joint bolt.

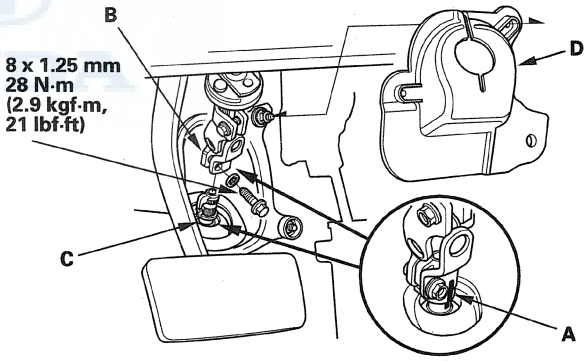

49. Install the steering joint cover (D).

50. Install the steering wheel (see page 17-24).

51. Install the heat shield.

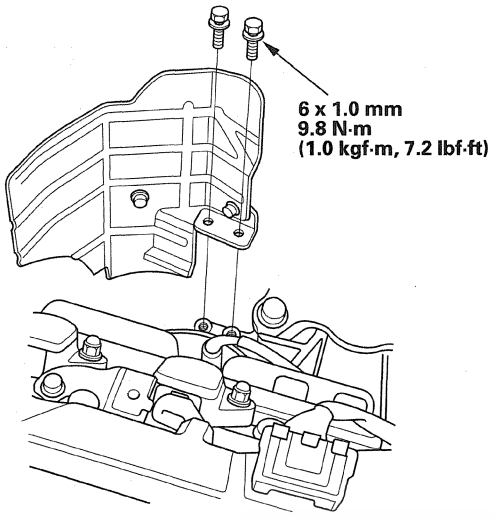

52. Install the P/S pump outlet line (A) with a new O-ring (B).

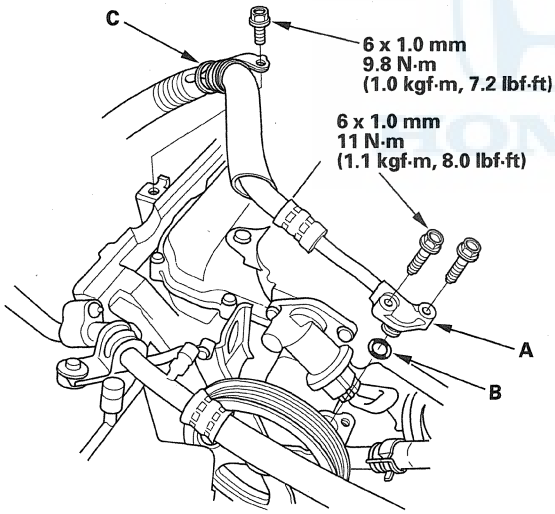

53. Install the P/S hose clamp (C).

54. Install the power steering system fluid reservoir to the clamp.

55. Install the drive belt (see page 4-33).

56. Install the shift cable (see page 14-235).

57. Install the brake booster vacuum hose (A) and the evaporative emission (EVAP) canister hose (B).

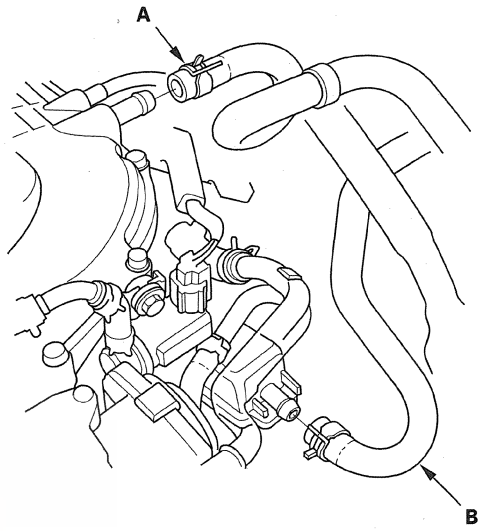

58. Connect the fuel feed hose (A) (see page 11-344), then install the quick-connect fitting cover (B).

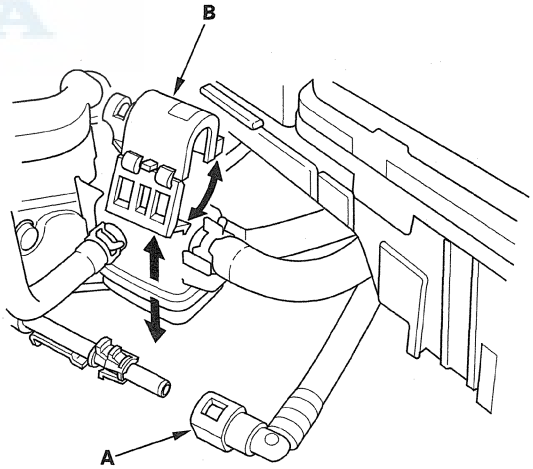

(cont'd)

Engine Installation (cont'd)

59. Install the strut brace (A), then install the connector (B) and the transfer breather hose (C).

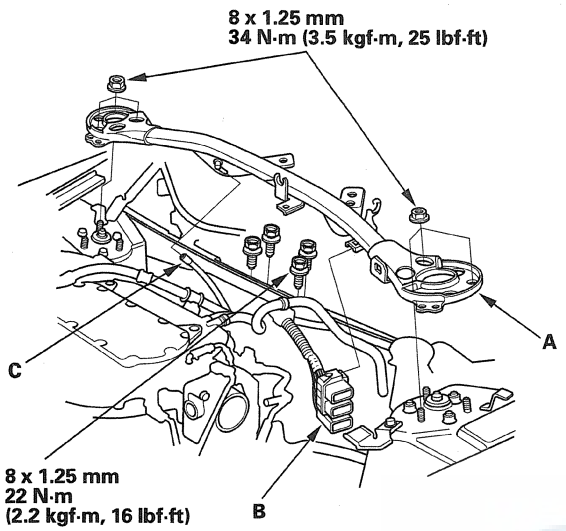

60. Connect the engine wire harness connectors (A), then install the harness clamp (B).

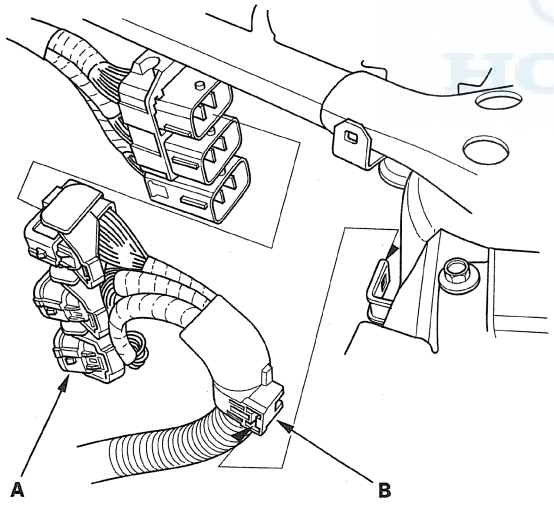

61. Install the under-hood fuse/relay box (A), then install the battery cable (B).

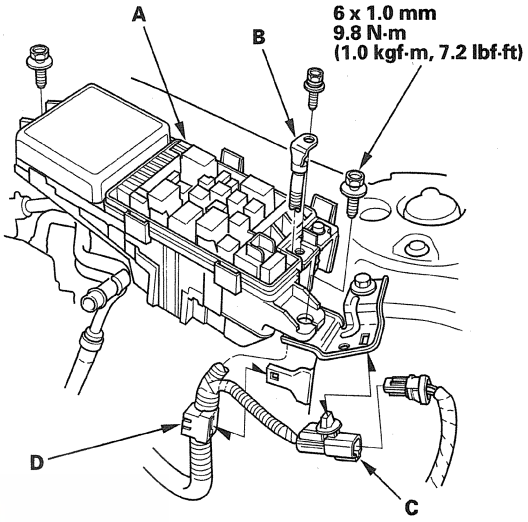

62. Connect the harness connector (C), then install the harness clamp (D).

63. Install the starter cable (A), the harness clamps (B), and the ground cable (C).

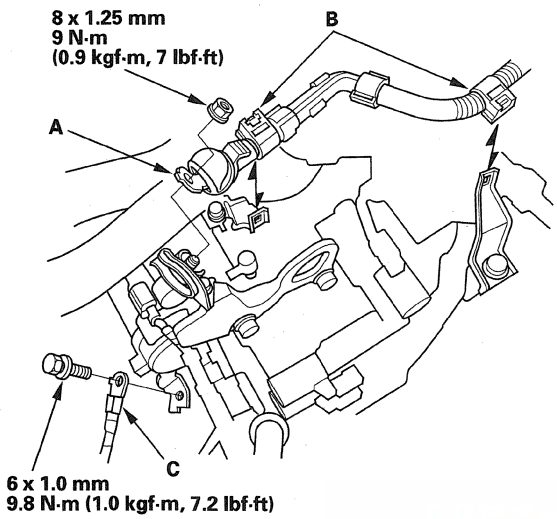

64. Install the battery base (A), then install the harness clamp (B).

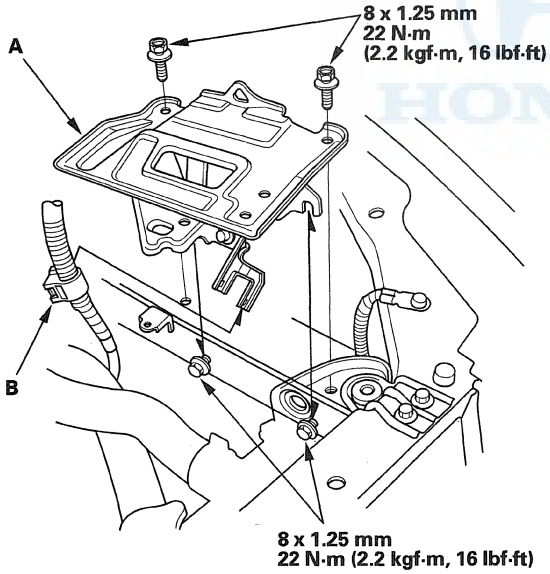

65. Install the air intake duct cover.

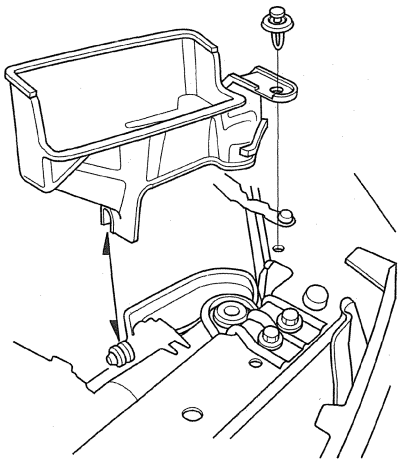

66. Install the air cleaner (see page 11-366).

67. Do the battery installation procedure (see page 22-92).

68. Move the shift lever to each gear, and verify that the A/T gear position indicator follows the transmission range switch.

69. Inspect for fuel leaks. Turn the ignition switch to ON (II) (do not operate the starter) so the fuel pump runs for about 2 seconds and pressurizes the fuel line. Repeat this operation two or three times, then check for fuel leaks at any point in the fuel line.

70. Refill the engine with engine oil (see step 4 on page 8-11).

71. Refill the transmission with ATF (see page 14-196).

72. Refill the radiator with engine coolant, and bleed air from the cooling system with the heater valve open (see step 8 on page 10-7).

(cont'd)

Engine Installation (cont'd)

73. Install the return hose to the power steering fluid reservoir. Refill the power steering system fluid (see page 17-13).

74. Do the crankshaft position (CKP) pattern clear/CKP pattern learn procedure (see page 11-5).

75. Inspect the idle speed (see page 11-312).

76. Inspect the ignition timing (see page 4-20).

77. Install the cowl cover (see page 20-164), the upper grille cover (see page 20-163), the left upper fender trim, the battery trim, and the right upper fender trim (see page 20-162).

78. Install the engine cover.

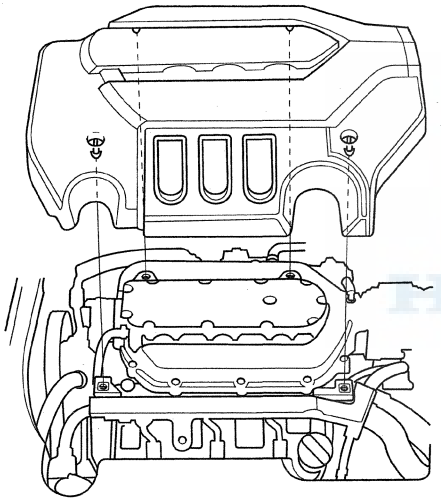

Engine Mount Replacement

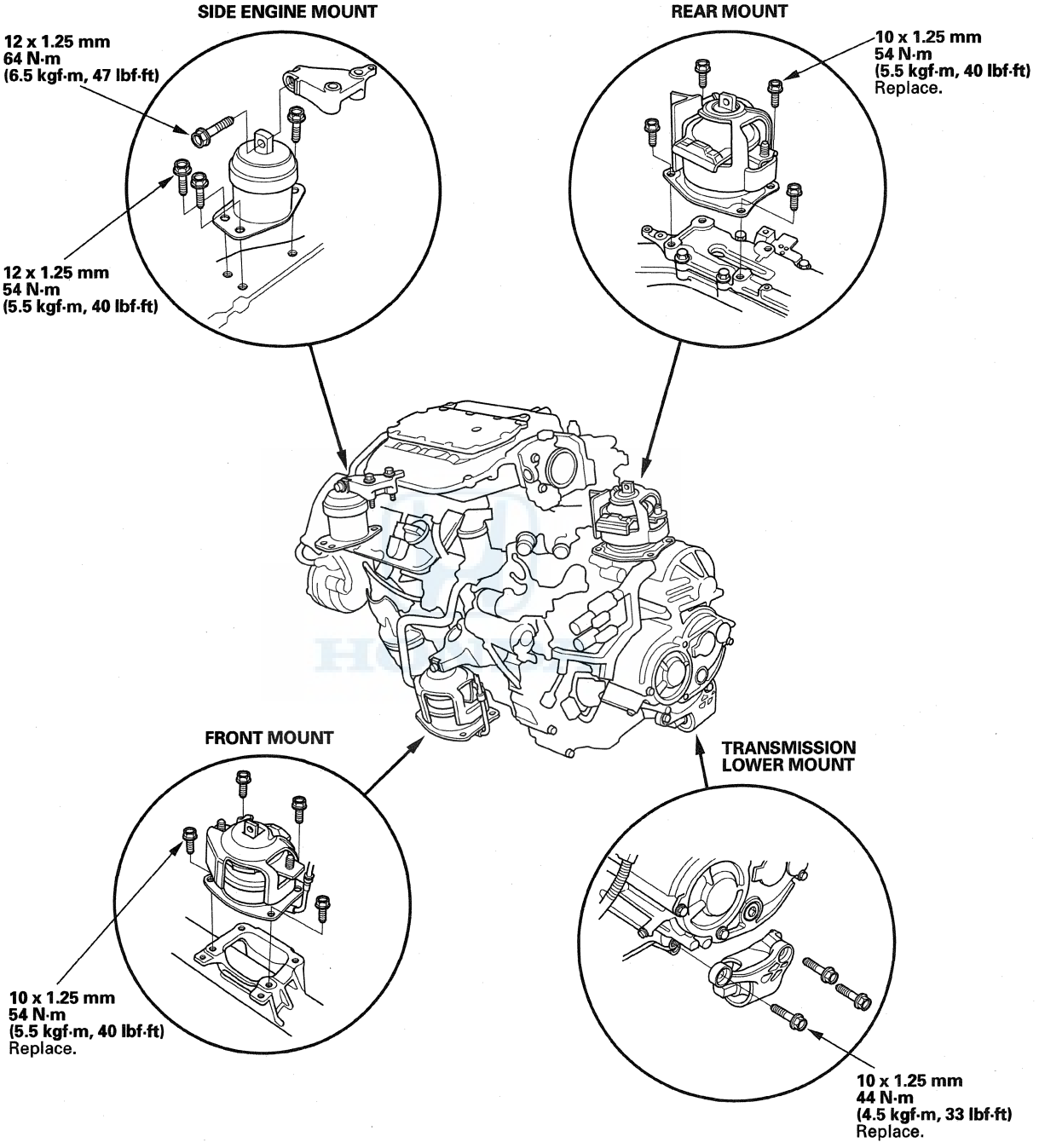

Engine Mechanical

Cylinder Head

Special Tools 6-2
Component Location Index 6-3
Engine Compression Inspection 6-7
VTEC Rocker Arm Test 6-8
Valve Clearance Adjustment 6-10
Crankshaft Pulley Removal and Installation 6-14
Timing Belt Inspection 6-15
Timing Belt Removal 6-16
Timing Belt Installation 6-18
Timing Belt Replacement 6-22
Timing Belt Drive Pulley Replacement 6-28
Timing Belt Adjuster Replacement 6-28
Cylinder Head Cover Removal 6-29
Cylinder Head Cover Installation 6-30
Cylinder Head Removal 6-34
Camshaft Replacement 6-37
Cylinder Head Inspection for Warpage 6-39
Rocker Arm Assembly Removal 6-40
Rocker Arm and Shaft
Disassembly/Reassembly 6-41
Rocker Arm and Shaft Inspection 6-43
Camshaft Inspection 6-45
Valve, Spring, and Valve Seal Removal 6-48
Valve Inspection 6-49
Valve Stem-to-Guide Clearance Inspection 6-49
Valve Guide Replacement 6-50
Valve Seat Reconditioning 6-52
Valve, Spring, and Valve Seal Installation 6-54
Camshaft, Rocker Arm Assembly,
Camshaft Seal, and Pulley Installation 6-55
Cylinder Head Installation 6-59
Camshaft Oil Seal Installation - In Car 6-63
Sealing Bolt Installation 6-63

Special Tools

Ref. No.	Tool Number	Description	Qty
①	07AAJ-PNAA101	Air Pressure Regulator	1
②	07AAJ-R70A100	VTEC Air Stop Tool A	1
③	07AAJ-R70A200	VTEC Air Stop Tool B	1
④	07GAF-SD40330	Ball Joint Remover/Installer	1
⑤	07HAH-PJ7A100	Valve Guide Reamer, 5.5 mm	1
⑥	07JAA-001020A	Socket, 19 mm	1
⑦	07JAB-001020B	Holder Handle	1
⑧	07MAB-PY3010A	Holder Attachment, 50 mm	1
⑨	07PAD-0010000	Stem Seal Driver	1
⑩	070AJ-001A101	VTEC/VCM Air Adapter	1
⑪	07742-0010100	Valve Guide Driver, 5.5 mm	1
⑫	07757-PJ1010A	Valve Spring Compressor Attachment	1

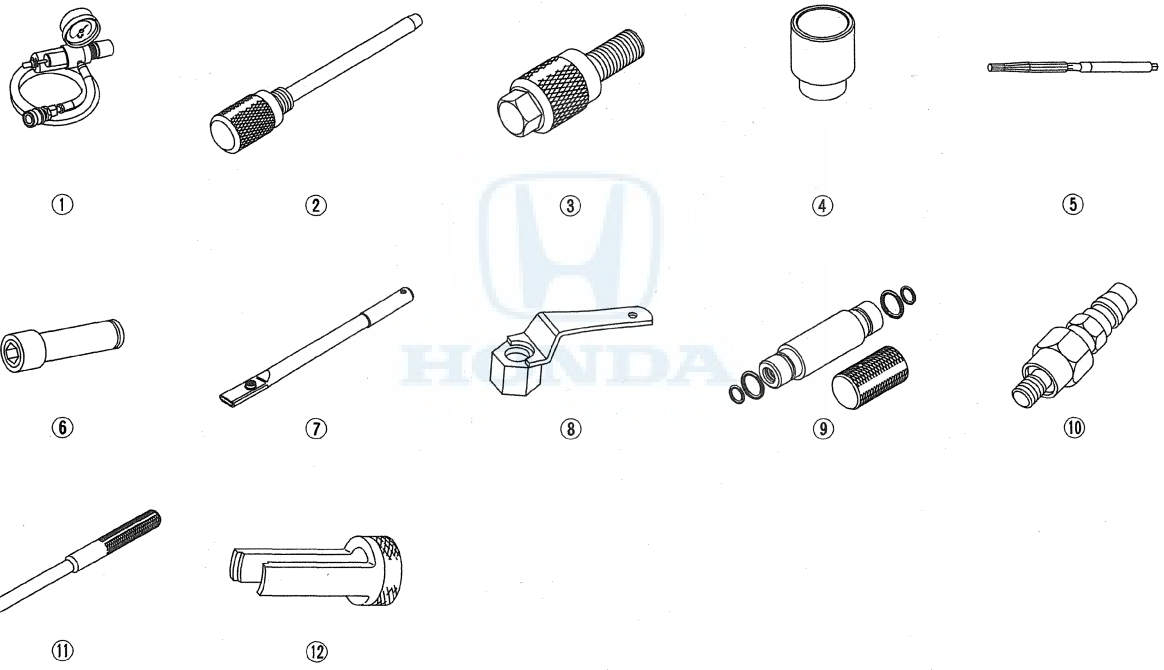

Component Location Index

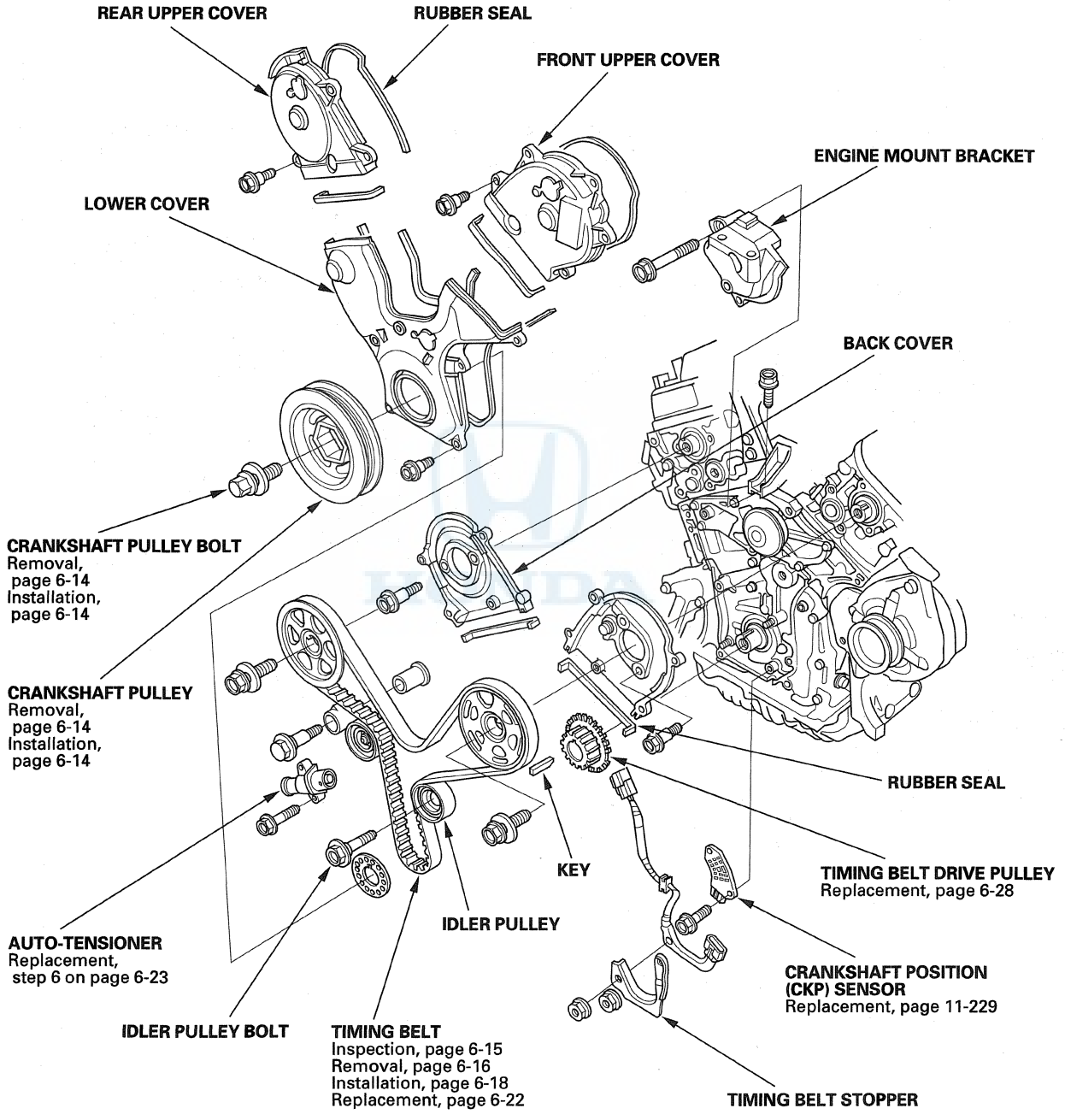

(cont'd)

Component Location Index (cont'd)

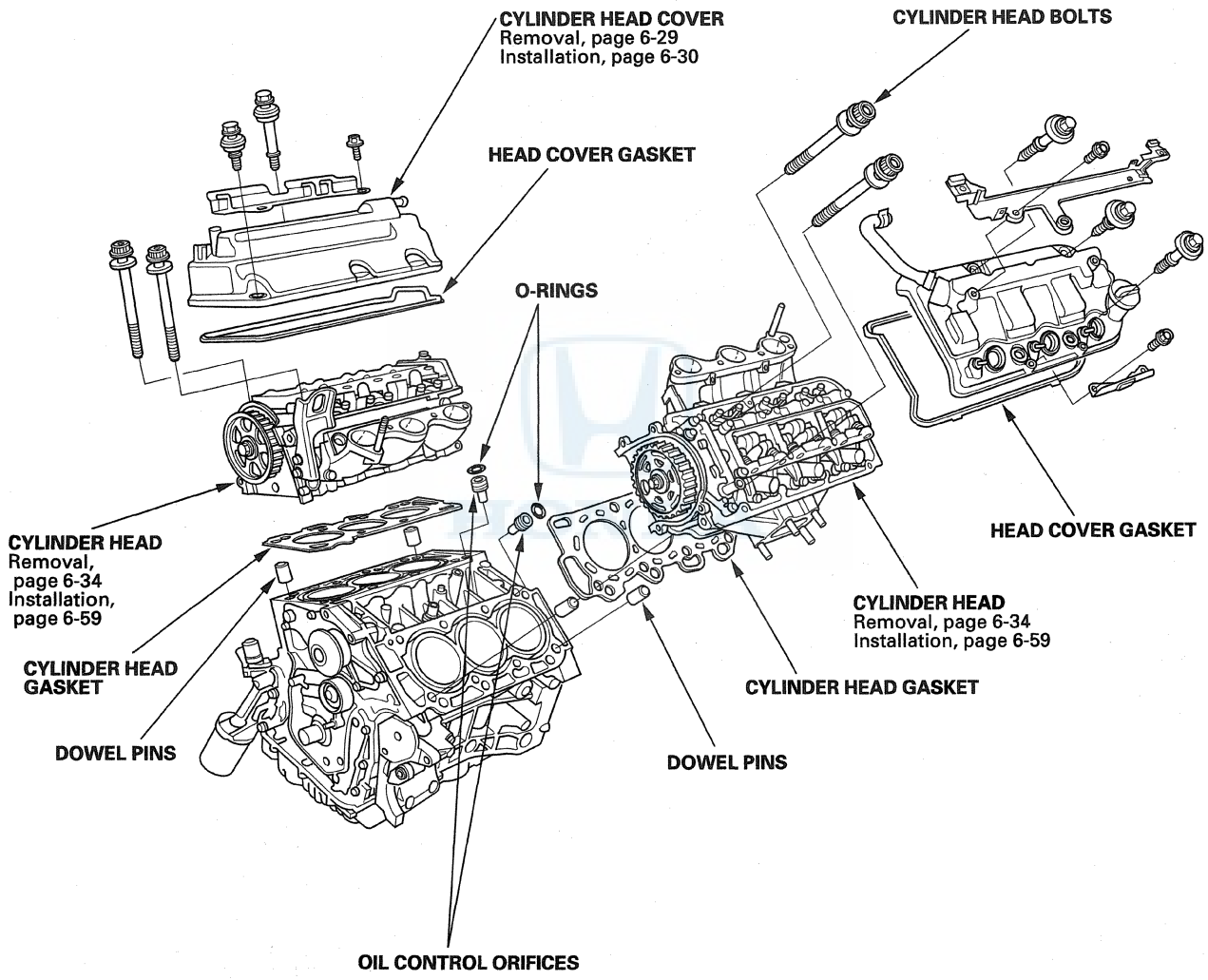

FRONT

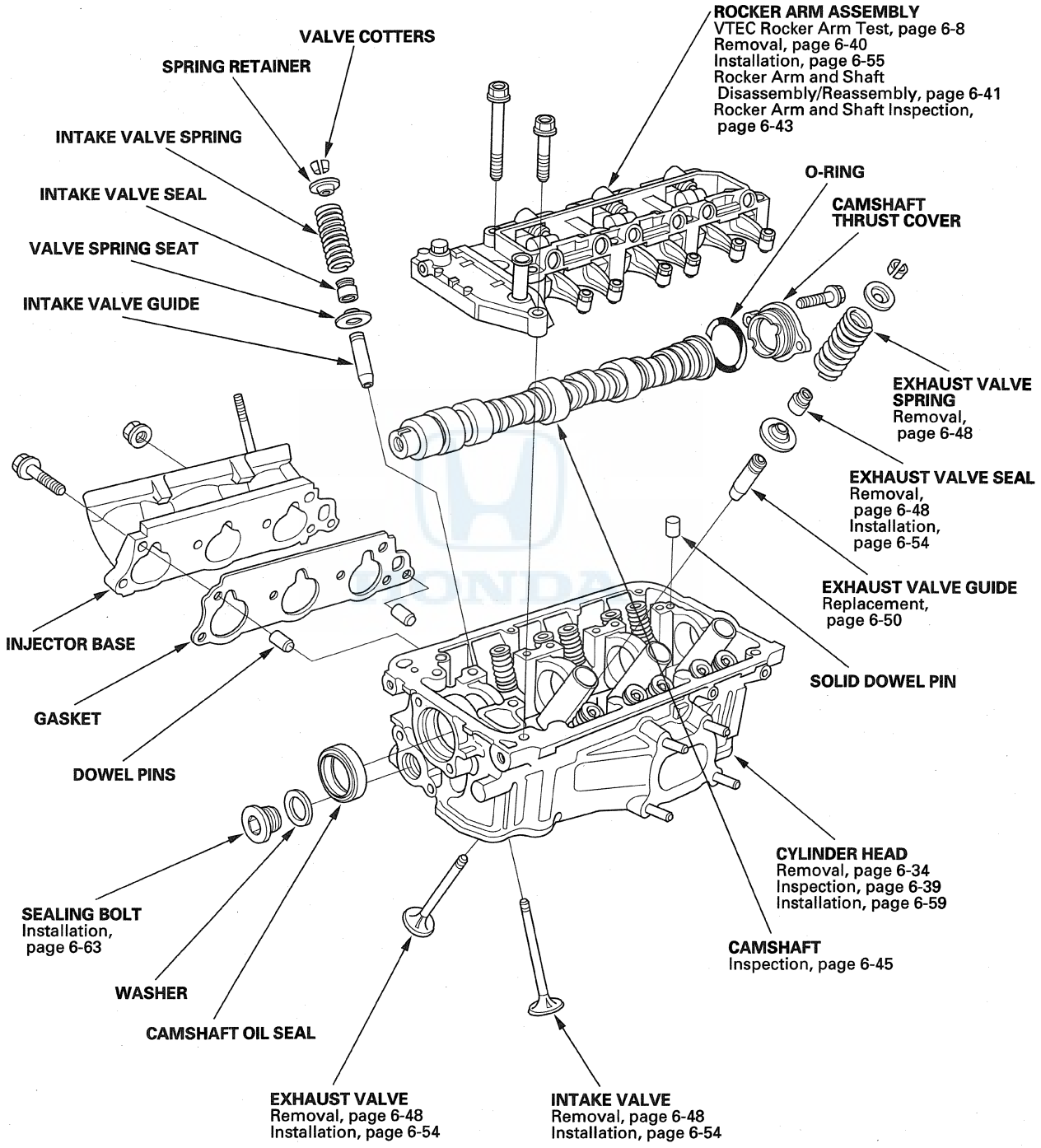
VALVE COTTERS
SPRING RETAINER
INTAKE VALVE SPRING
INTAKE VALVE SEAL
VALVE SPRING SEAT
INTAKE VALVE GUIDE
ROCKER ARM ASSEMBLY
VTEC Rocker Arm Test, page 6-8
Removal, page 6-40
Installation, page 6-55
Rocker Arm and Shaft Disassembly/Reassembly, page 6-41
Rocker Arm and Shaft Inspection, page 6-43
O-RING
CAMSHAFT THRUST COVER
EXHAUST VALVE SPRING
Removal, page 6-48
EXHAUST VALVE SEAL
Removal, page 6-48
Installation, page 6-54
EXHAUST VALVE GUIDE
Replacement, page 6-50
SOLID DOWEL PIN
INJECTOR BASE
GASKET
DOWEL PINS
SEALING BOLT
Installation, page 6-63
WASHER
CAMSHAFT OIL SEAL
EXHAUST VALVE
Removal, page 6-48
Installation, page 6-54
INTAKE VALVE
Removal, page 6-48
Installation, page 6-54
CYLINDER HEAD
Removal, page 6-34
Inspection, page 6-39
Installation, page 6-59
CAMSHAFT
Inspection, page 6-45

(cont'd)

Component Location Index (cont'd)

REAR

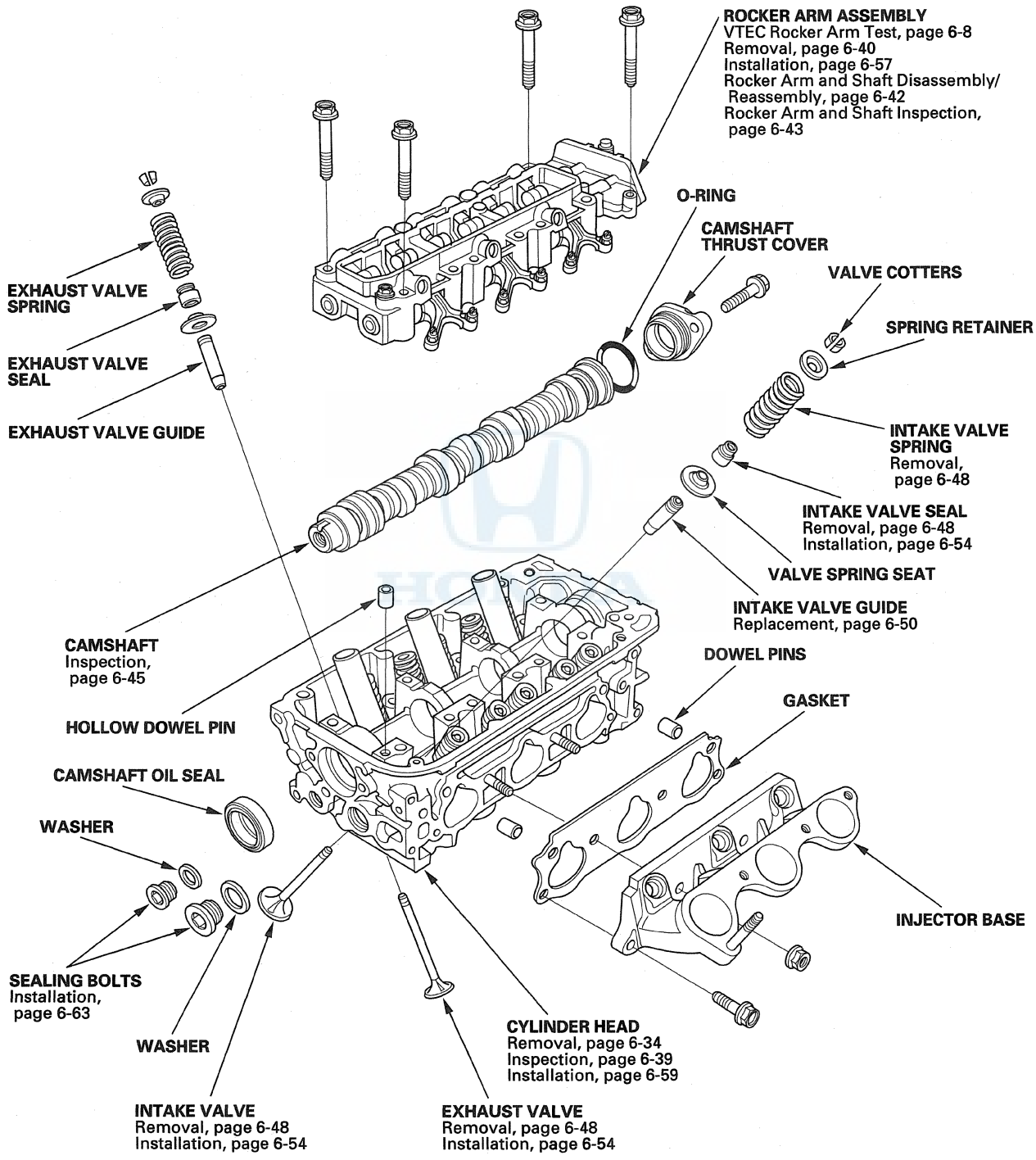

Engine Compression Inspection

NOTE: After the inspection, you must reset the powertrain control module (PCM). Otherwise, the PCM will continue to stop the fuel injectors from operating.

1. Warm up the engine to normal operating temperature (cooling fan comes on).
2. Turn the ignition switch to LOCK (0).
3. Connect the Honda Diagnostic System (HDS) to the data link connector (DLC) (see step 2 on page 11-3).
4. Turn the ignition switch to ON (II).
5. Make sure the HDS communicates with the vehicle and the PCM. If it doesn't communicate, troubleshoot the DLC circuit (see page 11-211).
6. Select PGM-FI, INSPECTION, then, ALL INJECTORS OFF on the HDS.
7. Turn the ignition switch to LOCK (0).
8. Remove the six ignition coils (see page 4-21).
9. Remove the six spark plugs.
10. Attach the compression gauge to a spark plug hole.

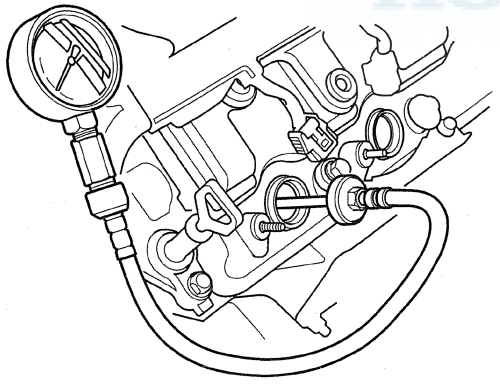

11. Step on the accelerator pedal to open the throttle plate, then crank the engine with the starter motor, and measure the compression.

    Compression Pressure:
    Above 930 kPa (9.5 kgf/cm², 135 psi)

12. Measure the compression on the remaining cylinders.

    Maximum Variation:
    Within 200 kPa (2.0 kgf/cm², 28 psi)

13. If the compression is not within specifications, check the following items, then remeasure the compression.

    - Incorrect valve clearance
    - Confirmation of cam timing
    - Damaged or worn cam lobes
    - Damaged or worn valves and seats
    - Damaged cylinder head gasket
    - Damaged or worn piston rings
    - Damaged or worn piston and cylinder bore

14. Remove the compression gauge from the spark plug hole.
15. Install the six spark plugs.
16. Install the six ignition coils (see page 4-21).
17. Select PCM reset (see page 11-4) to cancel the ALL INJECTORS STOP on the HDS.

VTEC Rocker Arm Test

Special Tools Required
- Air pressure regulator 07AAJ-PNAA101
- VTEC air stop tool A 07AAJ-R70A100
- VTEC air stop tool B 07AAJ-R70A200
- VTEC/VCM air adapter 070AJ-001A101

1. Start the engine and let it run for 5 minutes, then turn the ignition switch to LOCK (0).
2. Remove the six spark plugs.
3. Remove the cylinder head covers (see page 6-29).
4. Rotate the crankshaft pulley clockwise, and visually check all intake primary rocker arms (A) and intake secondary rocker arms (B) moves independently.
   - If the intake primary rocker arm and the intake secondary rocker arm move together, remove the intake primary rocker arm and the intake secondary rocker arm as an assembly, and check that the pistons in the rocker arms move smoothly. If any intake rocker arm needs replacing, replace the primary and secondary rocker arms as an assembly, then retest.
   - If the intake primary rocker arm and the intake secondary rocker arm move independently, go to step 5.

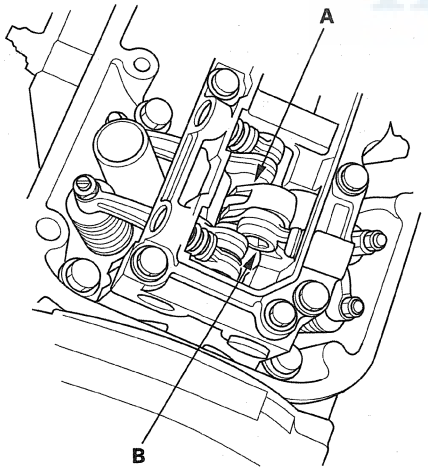

5. Rotate the crankshaft pulley clockwise, and visually check all exhaust primary rocker arms (A) and exhaust secondary rocker arms (B) move independently.
   - If the exhaust primary rocker arm and the exhaust primary rocker arm move together, remove the exhaust primary rocker arm and the exhaust secondary rocker arm as an assembly, and check that the pistons in the rocker arms move smoothly. If any exhaust rocker arm needs replacing, replace the primary and secondary rocker arms as an assembly, then retest.
   - If the exhaust primary rocker arm and the exhaust secondary rocker arm move independently, go to step 6.

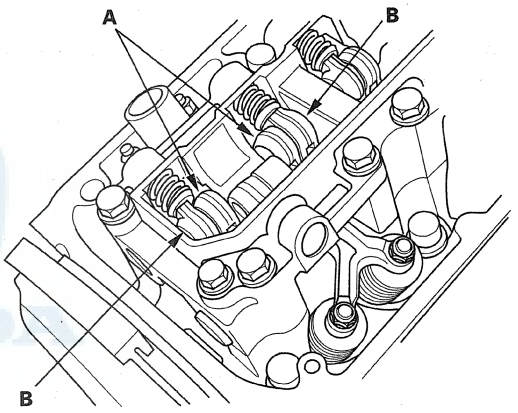

6. Inspect the valve clearance (see page 6-10).
7. Check that the air pressure on the shop air compressor gauge indicates over 981 kPa (10.0 kgf/cm^2, 142 psi).

8. Remove the sealing bolts from the front cylinder head, then install the VTEC/VCM air adapter (A) to the inspection hole and install the VTEC air stop tool B, then connect the air pressure regulator (C).

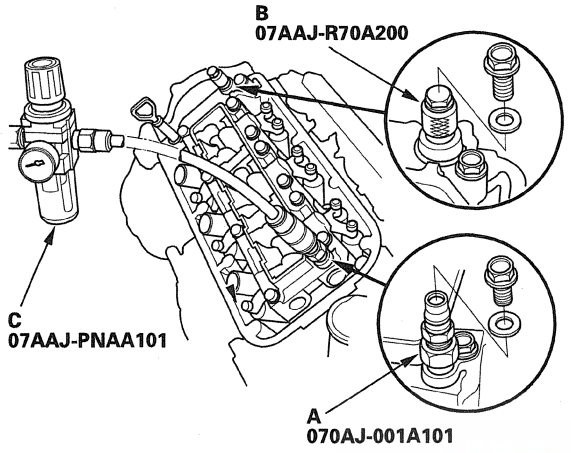

9. Remove the sealing bolts from the rear cylinder head, then install the VTEC air stop tool A to the inspection hole and install the VTEC/VCM air adapter (B), then connect the air pressure regulator (C).

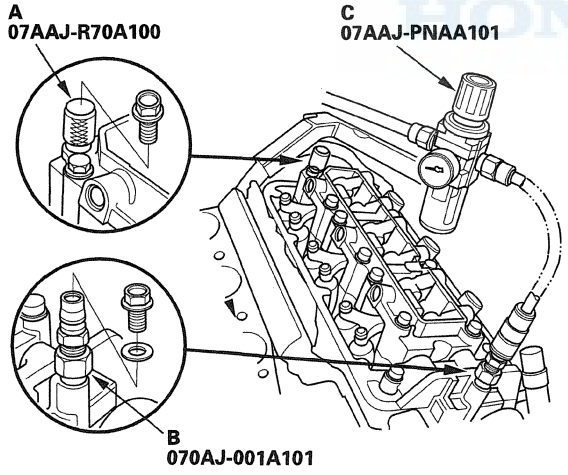

10. Loosen the valve on the regulator, and apply the specified air pressure.

Specified Air Pressure:
550—690 kPa (5.6—7.0 kgf/cm², 80—100 psi)

11. With the specified air pressure applied, rotate the crankshaft pulley clockwise, and visually check all intake primary rocker arms (A) and intake secondary rocker arms (B) move together.

- If the intake primary rocker arm and the intake secondary rocker arm move independently, remove the intake primary rocker arm and the intake secondary rocker arm as an assembly, and check that the pistons in the rocker arms move smoothly. If any intake rocker arm needs replacing, replace the primary and secondary rocker arms as an assembly, then retest.
- If the intake primary rocker arm and the intake secondary rocker arm move together, go to step 12.

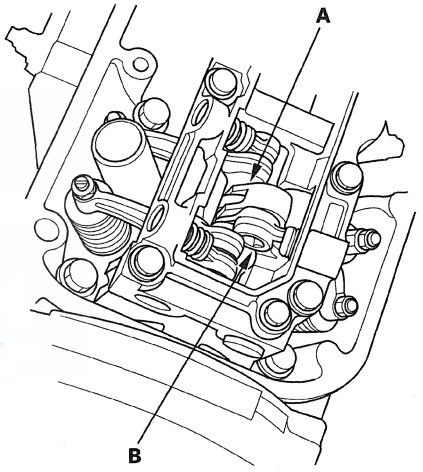

(cont'd)

VTEC Rocker Arm Test (cont'd)

12. With the specified air pressure applied, rotate the crankshaft pulley clockwise, and visually check all exhaust rocker primary arms (A) and exhaust secondary rocker arms (B) move together.

    - If the exhaust primary rocker arm and the exhaust secondary rocker arm move independently, remove the exhaust primary rocker arm and the exhaust secondary rocker arm as an assembly, and check that the pistons in the rocker arms move smoothly. If any exhaust rocker arm needs replacing, replace the primary and secondary rocker arms as an assembly, then retest.
    - If the exhaust primary rocker arm and the exhaust secondary rocker arm move together, go to step 13.

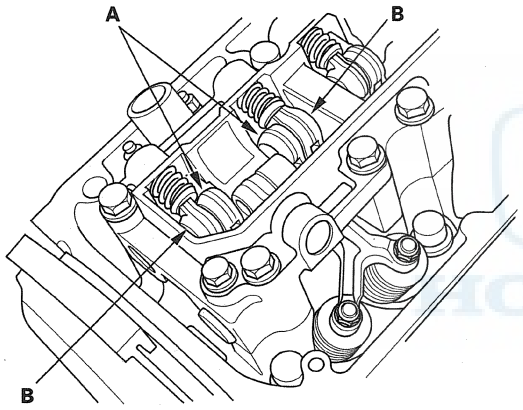

13. Remove the air pressure regulator, the VTEC/VCM air adapter, the VTEC air stop tool A, and the VTEC air stop tool B.

14. Tighten the sealing bolts to 22 N·m (2.2 kgf·m, 16 lbf·ft).

15. Install the cylinder head covers (see page 6-30).

16. Install the six spark plugs.

Valve Clearance Adjustment

NOTE: Adjust the valves only when the cylinder head temperature is less than 100 °F (38 °C).

1. Remove the right upper fender trim (see page 20-162).

2. Remove the cylinder head covers (see page 6-29).

3. Set the No. 1 piston at top dead center (TDC). Align the pointer (A) on the front upper cover with the No. 1 piston TDC mark (B) on the front camshaft pulley.

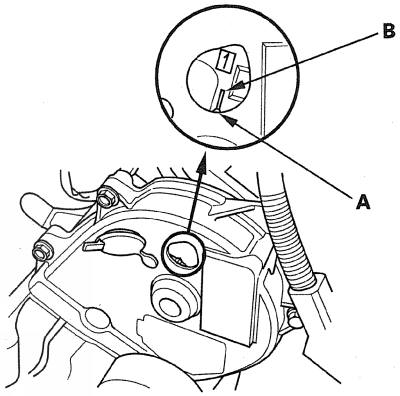

4. Select the correct thickness feeler gauge for the valves you are going to check.

Valve Clearance
Intake: 0.20—0.24 mm (0.008—0.009 in)
Exhaust: 0.28—0.32 mm (0.011—0.013 in)

REAR

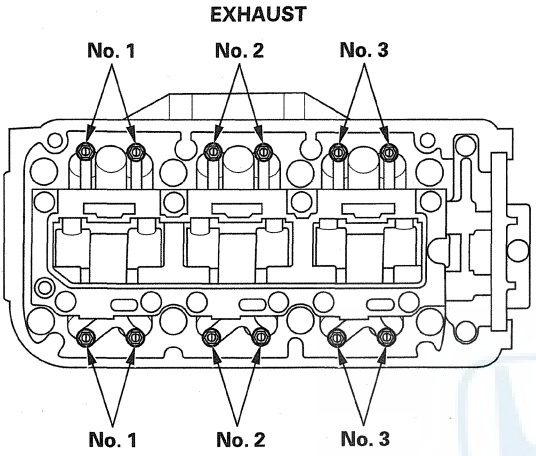

FRONT

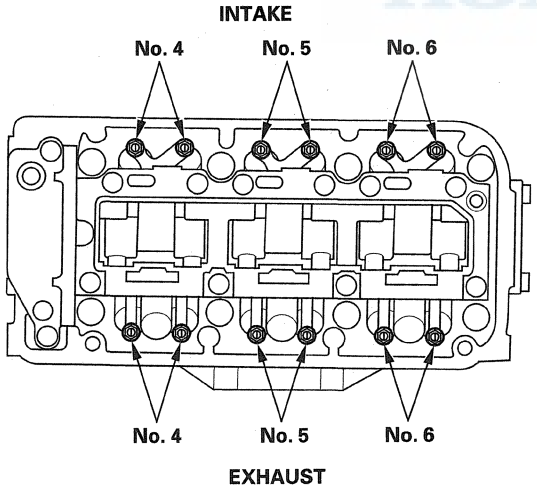

5. Insert the feeler gauge (A) between the adjusting screw and the end of the valve stem on the No. 1 cylinder, and slide it back and forth; you should feel a slight amount of drag.

INTAKE

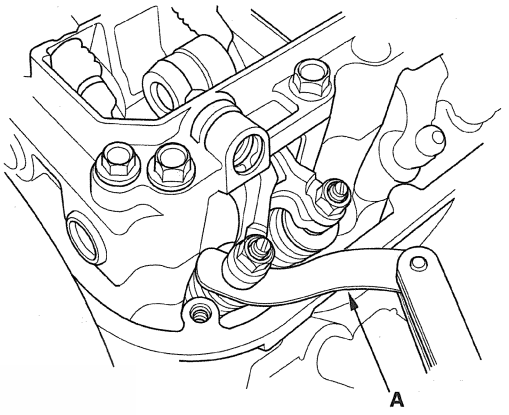

EXHAUST

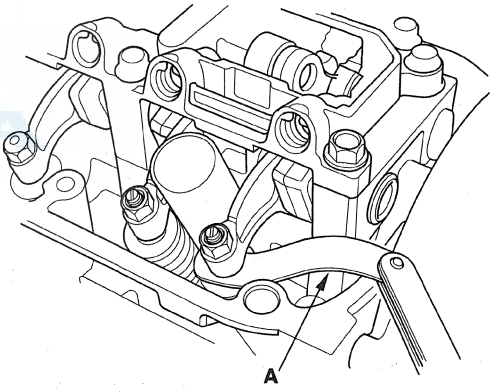

(cont'd)

Valve Clearance Adjustment (cont'd)

6. If you feel too much or too little drag, loosen the locknut, and turn the adjusting screw until the drag on the feeler gauge is correct.

INTAKE

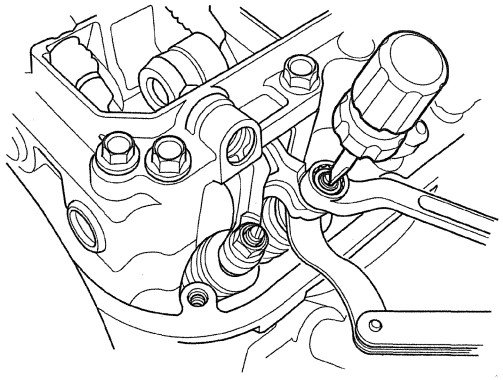

EXHAUST

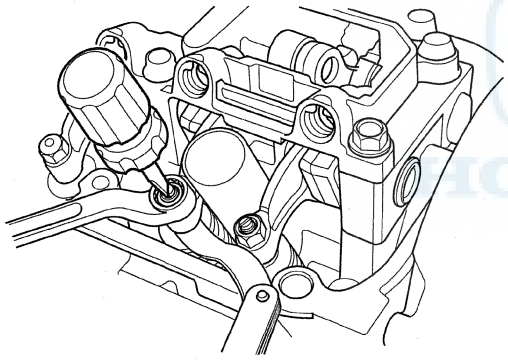

7. While holding the adjusting screw with the screw driver, tighten the locknut, then recheck the clearance. Repeat the adjustment, if necessary.

Specified Torque
20 N·m (2.0 kgf·m, 14 lbf·ft)
Apply new engine oil to the nut threads.

8. Rotate the crankshaft clockwise. Align the pointer (A) on the front upper cover with the No. 4 piston TDC mark (B) on the front camshaft pulley.

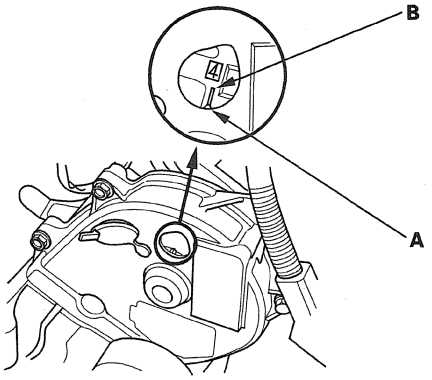

9. Check and, if necessary, adjust the valve clearance on the No. 4 cylinder.

10. Rotate the crankshaft clockwise. Align the pointer (A) on the front upper cover with the No. 2 piston TDC mark (B) on the front camshaft pulley.

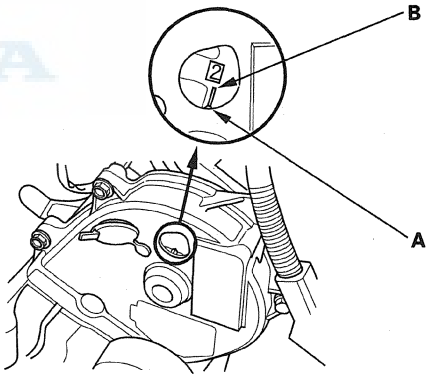

11. Check and, if necessary, adjust the valve clearance on the No. 2 cylinder.

12. Rotate the crankshaft clockwise. Align the pointer (A) on the front upper cover with the No. 5 piston TDC mark (B) on the front camshaft pulley.

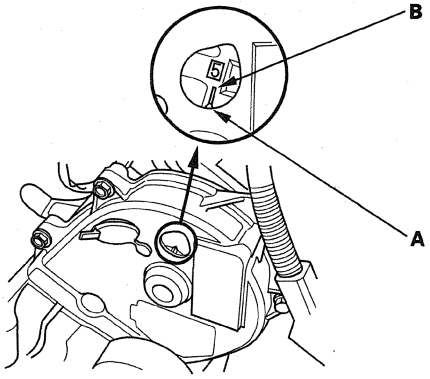

13. Check and, if necessary, adjust the valve clearance on the No. 5 cylinder.

14. Rotate the crankshaft clockwise. Align the pointer (A) on the front upper cover with the No. 3 piston TDC mark (B) on the front camshaft pulley.

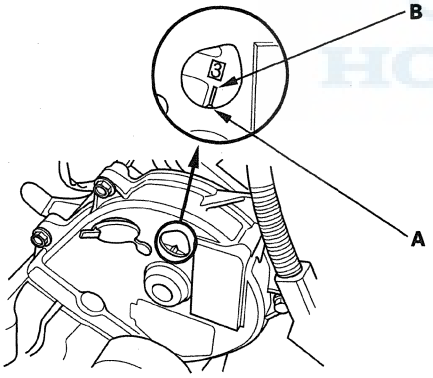

15. Check and, if necessary, adjust the valve clearance on the No. 3 cylinder.

16. Rotate the crankshaft clockwise. Align the pointer (A) on the front upper cover with the No. 6 piston TDC mark (B) on the front camshaft pulley.

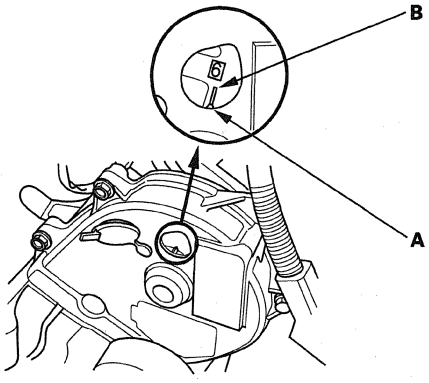

17. Check and, if necessary, adjust the valve clearance on the No. 6 cylinder.

18. Install the cylinder head covers (see page 6-30).

Crankshaft Pulley Removal and Installation

Special Tools Required
- Holder handle 07JAB-001020B
- Holder attachment, 50 mm, offset 07MAB-PY3010A
- Socket, 19 mm 07JAA-001020A, or a commercially available 19 mm socket

Removal

1. Raise the vehicle on the lift.
2. Remove the right front wheel.
3. Remove the splash shield.

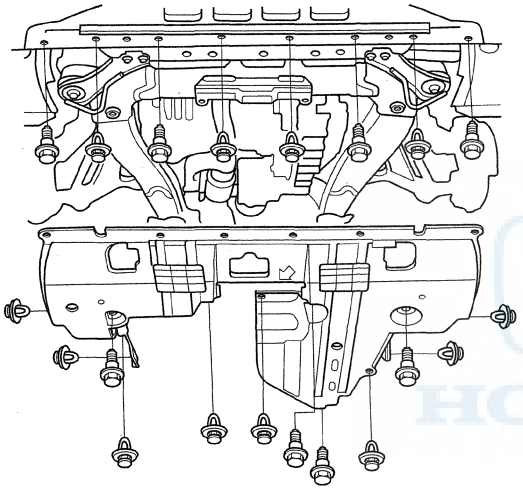

4. Remove the drive belt (see page 4-33).
5. Hold the pulley with the holder handle (A) and the holder attachment (B).

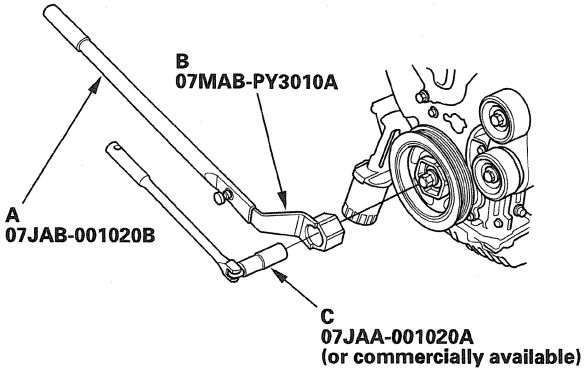

6. Remove the bolt with a heavy duty 19 mm socket (C) and a breaker bar, then remove the crankshaft pulley.

Installation

1. Remove any oil and clean the pulleys (A), the crankshaft (B), the bolt (C), and the washer (D). Lubricate with new engine oil as shown.

×: Remove any oil
○: Clean
●: Lubricate with new engine oil

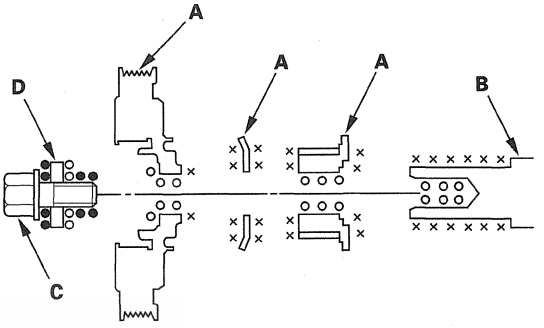

2. Install the crankshaft pulley, and tighten the bolt. Do not use an impact wrench.

   -1 Hold the pulley with the holder handle (A) and the holder attachment (B). Tighten the bolt to 64 N·m (6.5 kgf·m, 47 lbf·ft) with a torque wrench and a 19 mm socket (C).
   -2 Mark the bolt head (D) and the crankshaft pulley (E) as shown, then tighten the bolt an additional 60 ° (The mark on the bolt head lines up with the mark on the crankshaft pulley).

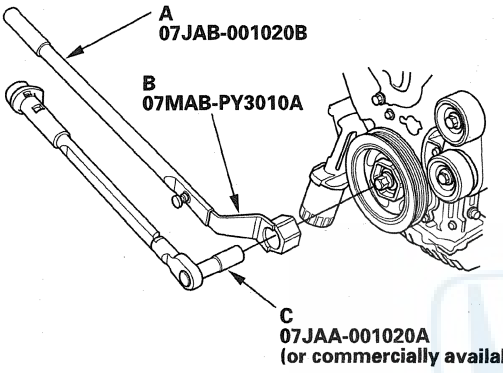

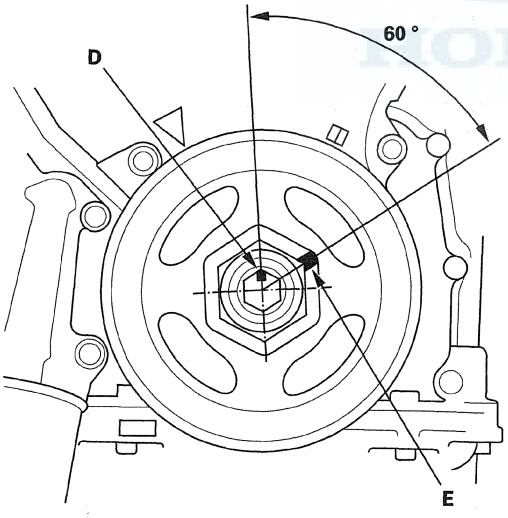

3. Install the drive belt (see page 4-33).
4. Install the splash shield.
5. Install the right front wheel.

Timing Belt Inspection

1. Remove the right upper fender trim (see page 20-162).
2. Remove the drive belt (see page 4-33).
3. Remove the front upper cover.

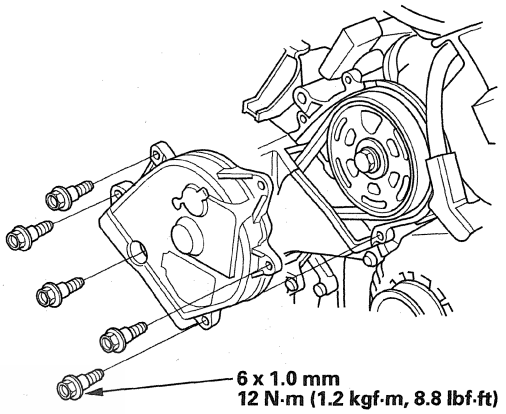

4. Inspect the timing belt for cracks and oil or coolant contamination. Replace the belt if it is cracked, or is contaminated with oil or coolant. Wipe off any oil or solvent that gets on the belt pulleys.

   NOTE: If there is any leakage, repair them before replacing the belt.

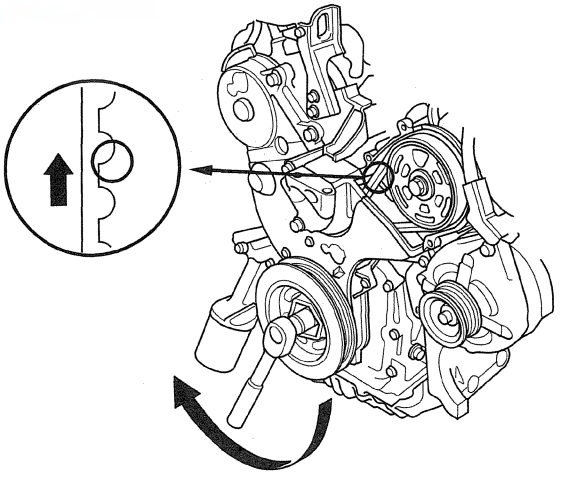

Timing Belt Removal

1. Remove the right upper fender trim (see page 20-162).

2. Turn the crankshaft so its white mark (A) lines up with the pointer (B).

   NOTE: The other pointer (C) is not used.

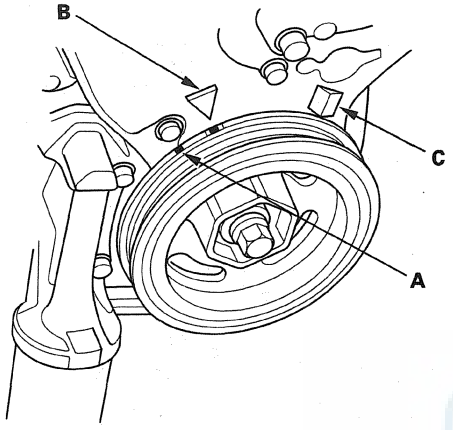

3. Check that the No. 1 piston top dead center (TDC) mark (A) on the front camshaft pulley and the pointer (B) on the front upper cover are aligned.

   NOTE: If the marks are not aligned, rotate the crankshaft 360 degrees, and recheck the camshaft pulley mark.

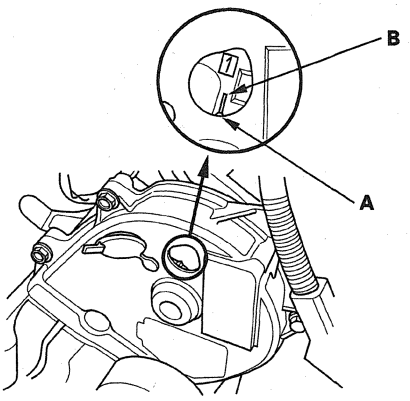

4. Remove the right front wheel.

5. Remove the splash shield.

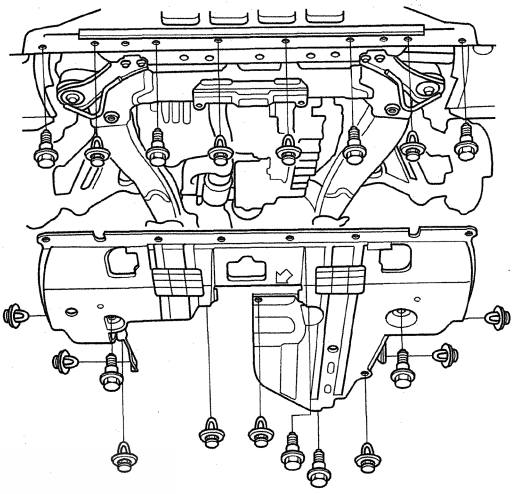

6. Remove the drive belt (see page 4-33).

7. Remove the drive belt auto-tensioner (see page 4-35).

8. Support the engine with a jack and wood block under the oil pan.

9. Remove the ground cable (A), then remove the upper engine mount bracket (B).

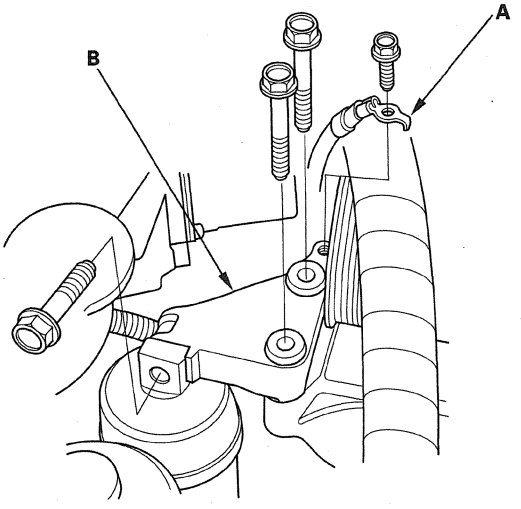

10. Remove the front upper cover (A) and rear upper cover (B).

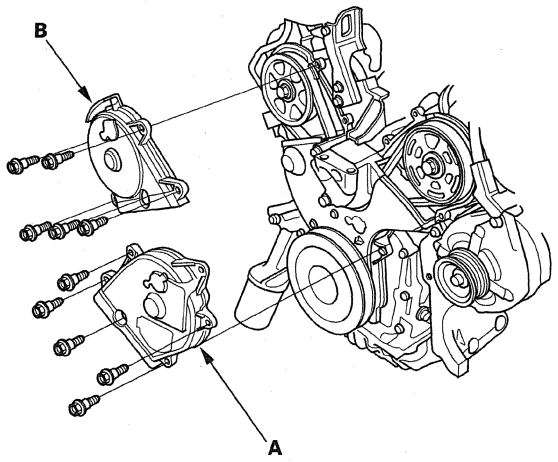

11. Remove the crankshaft pulley (see step 5 on page 6-14).

12. Remove the lower cover.

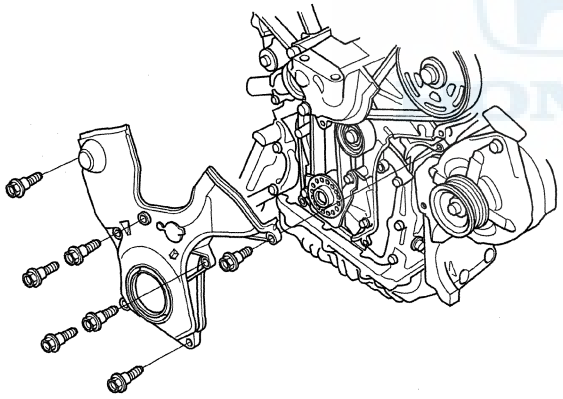

13. Remove one of the battery clamp bolts from the battery tray, and grind the end of it as shown.

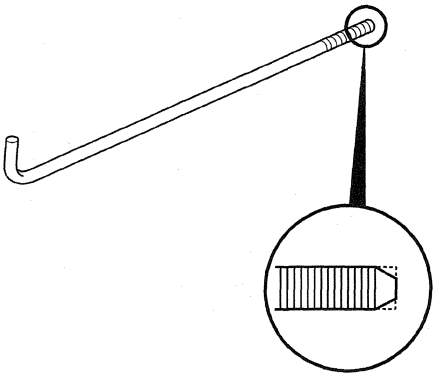

14. Thread in the battery clamp bolt as shown to hold the timing belt adjuster in its current position. Tighten it by hand; do not use a wrench.

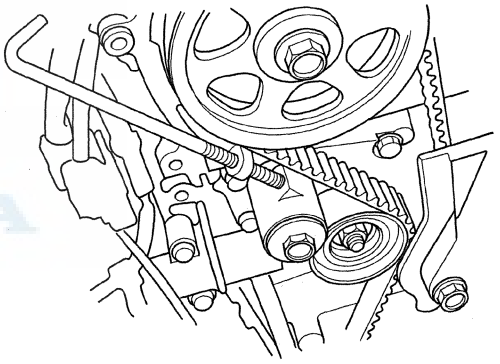

(cont'd)

Timing Belt Removal (cont'd)

15. Remove the side engine mount bracket.

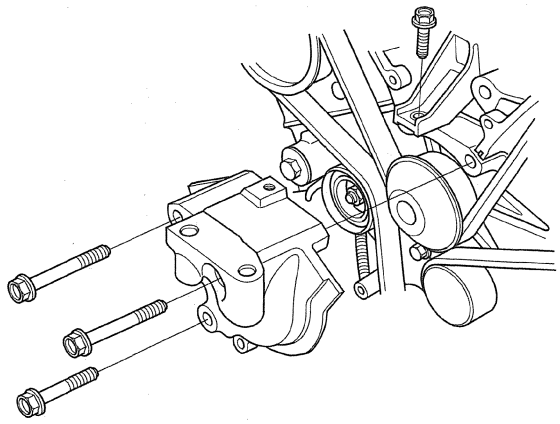

16. Remove the idler pulley bolt (A) and the idler pulley (B), then remove the timing belt. Discard the idler pulley bolt.

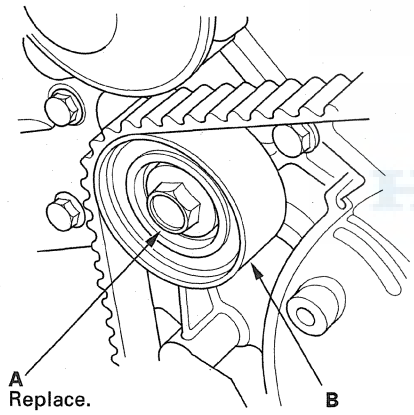

Timing Belt Installation

NOTE: The following procedure is for installing a used timing belt. If you are installing a new belt, refer to the timing belt replacement procedure (see page 6-22).

1. Clean the timing belt pulleys, the timing belt guide plate, and the upper and lower covers.

2. Set the timing belt drive pulley to top dead center (TDC) by aligning the TDC mark (A) on the tooth of the timing belt drive pulley with the pointer (B) on the oil pump.

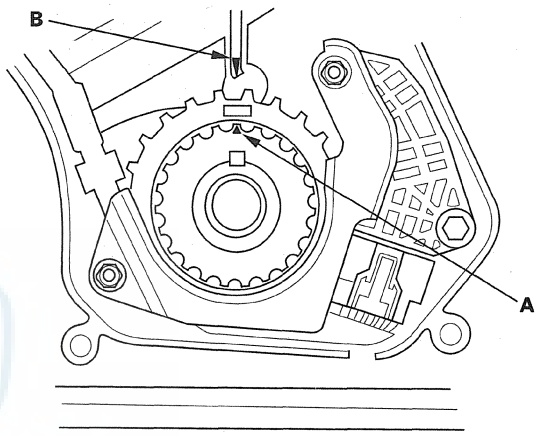

3. Set the camshaft pulleys to TDC by aligning the TDC marks (A) on the camshaft pulleys with the pointers (B) on the back covers.

FRONT

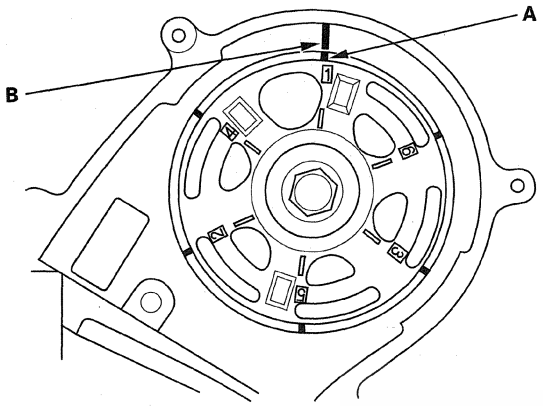

REAR

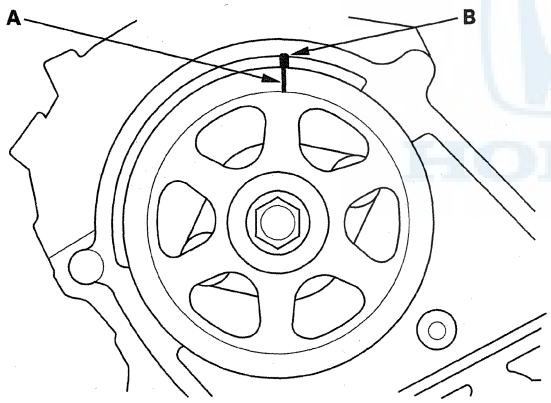

4. Loosely install the idler pulley with a new idler pulley bolt so the pulley can move, but does not come off.

5. If the auto-tensioner has extended and the timing belt cannot be installed, perform the timing belt replacement procedure (see page 6-22).

6. Install the timing belt in a counterclockwise sequence starting with the drive pulley. Take care not to damage the timing belt when installing it.

   1 Drive pulley (A)
   2 Idler pulley (B)
   3 Front camshaft pulley (C)
   4 Water pump pulley (D)
   5 Rear camshaft pulley (E)
   6 Adjusting pulley (F)

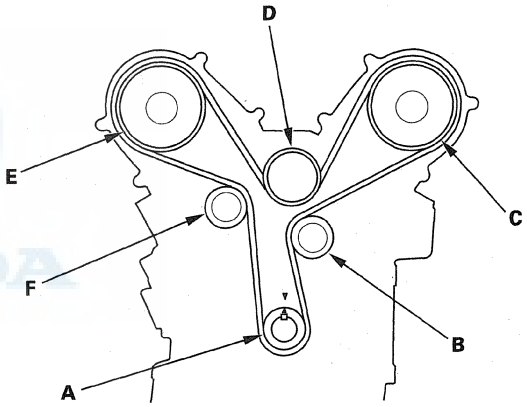

7. Tighten the idler pulley bolt.

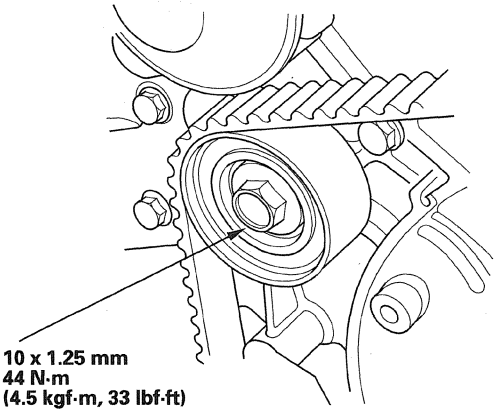

(cont'd)

Timing Belt Installation (cont'd)

8. Remove the battery clamp bolt from the back cover.

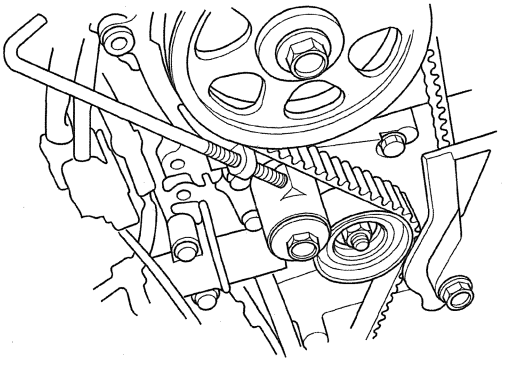

9. Install the side engine mount bracket.

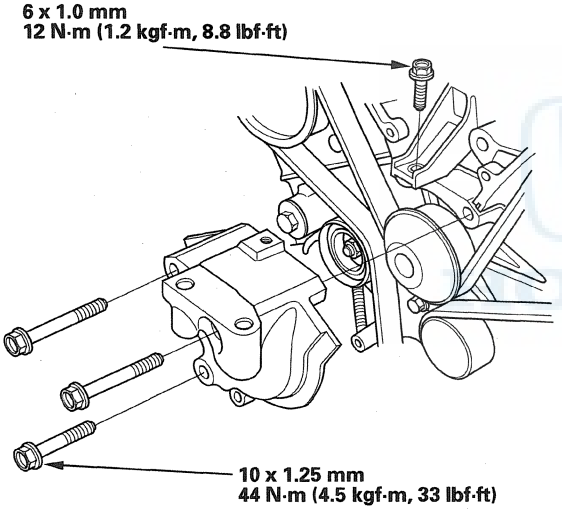

10. Install the timing belt guide plate as shown.

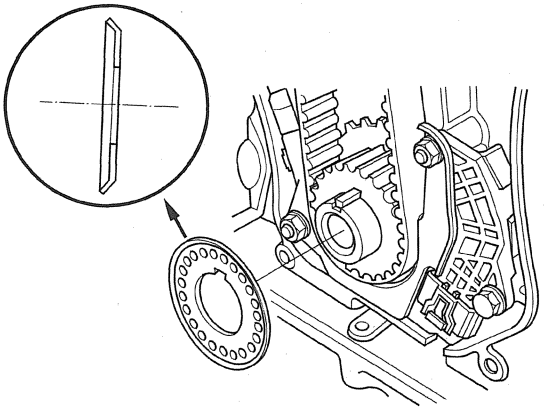

11. Install the lower cover.

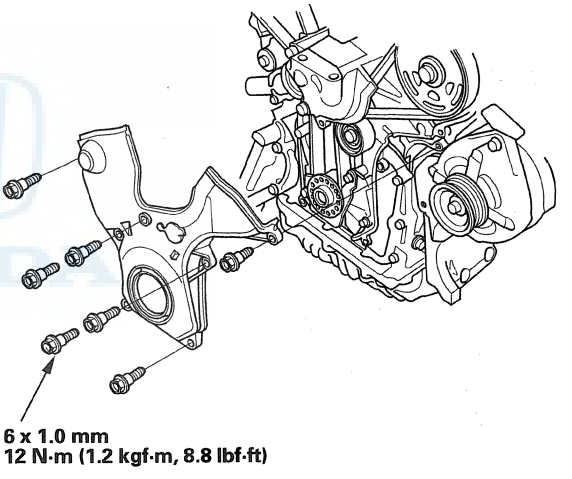

12. Install the crankshaft pulley (see page 6-14).

13. Install the front upper cover (A) and the rear upper cover (B).

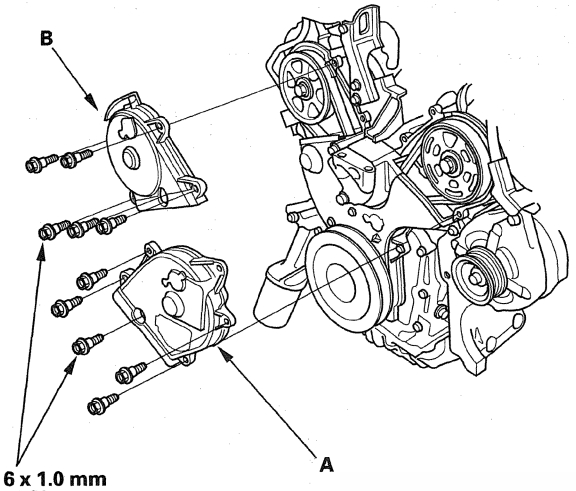

14. Rotate the crankshaft pulley about six turns clockwise so the timing belt positions itself on the pulleys.

15. Turn the crankshaft pulley so the white mark (A) lines up with the pointer (B).

    NOTE: The other pointer (C) is not used.

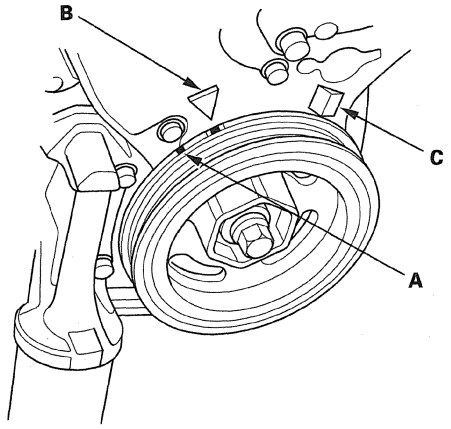

16. Check the camshaft pulley marks.

    - If the camshaft pulley marks are at TDC, go to step 17.
    - If the camshaft pulley marks are not at TDC, remove the timing belt and repeat steps 2 through 16.

FRONT

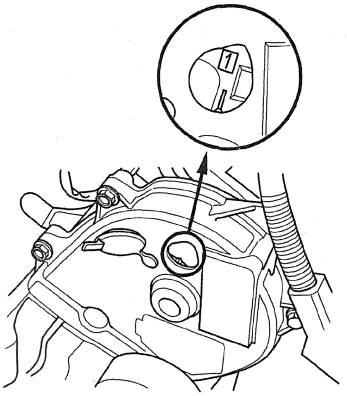

REAR

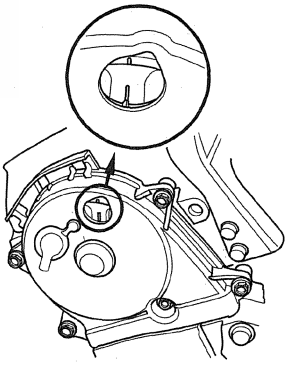

(cont'd)

Timing Belt Installation (cont'd)

17. Install the upper engine mount bracket (A), then tighten the bolts in the numbered sequence shown.

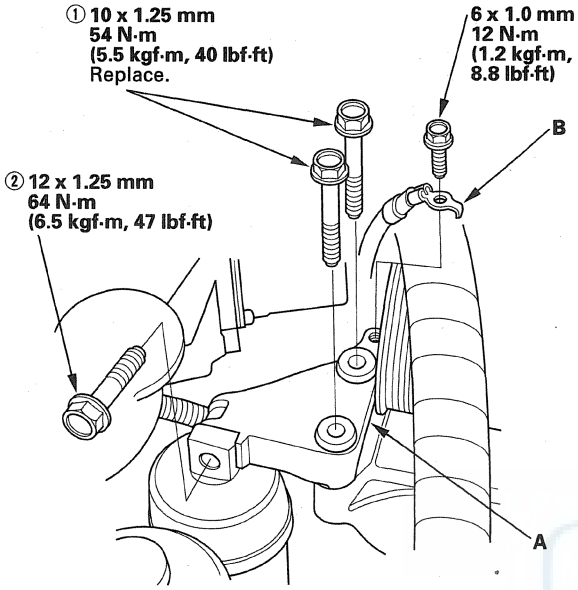

18. Install the ground cable (B).
19. Install the drive belt auto-tensioner (see page 4-35).
20. Install the drive belt (see page 4-33).
21. Install the splash shield.
22. Install the right front wheel.
23. Do the crankshaft position (CKP) pattern clear/CKP pattern learn procedure (see page 11-5).

Timing Belt Replacement

NOTE: The following procedure is for the installation of a new timing belt. If you are installing a used belt, refer to the timing belt installation procedure (see page 6-18).

1. Remove the timing belt (see page 6-16).
2. Clean the timing belt pulleys, the timing belt guide plate, and the upper and lower covers.
3. Set the timing belt drive pulley to top dead center (TDC) by aligning the TDC mark (A) on the tooth of the timing belt drive pulley with the pointer (B) on the oil pump.

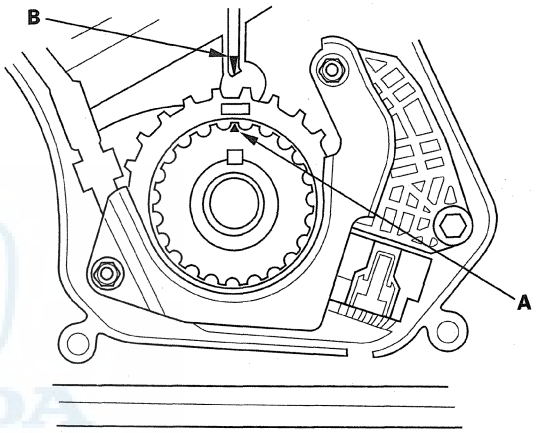

4. Set the camshaft pulleys to TDC by aligning the TDC marks (A) on the camshaft pulleys with the pointers (B) on the back covers.

FRONT

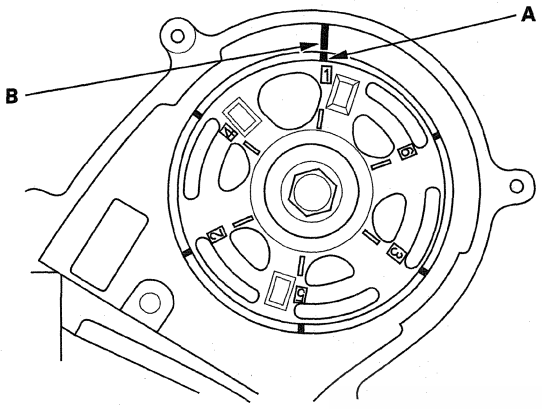

REAR

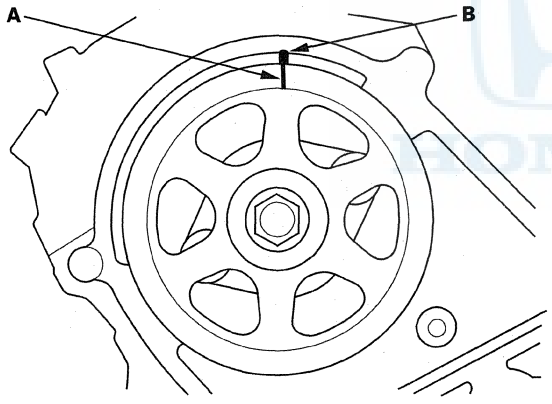

5. Remove the battery clamp bolt from the back cover.

6. Remove the auto-tensioner.

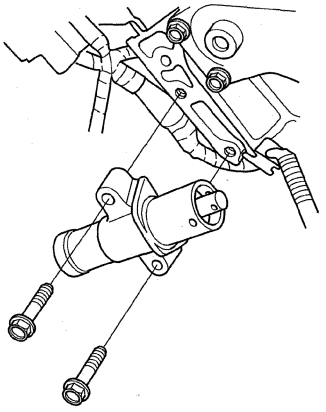

7. Align the holes on the rod and housing of the auto-tensioner.

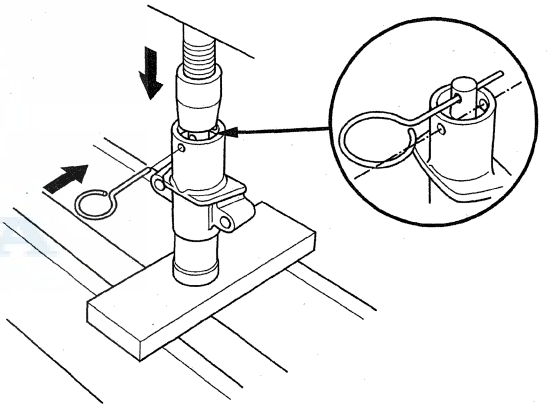

8. Use a hydraulic press to slowly compress the auto-tensioner. Insert a 2.0 mm (0.08 in) pin through the housing and the rod.

   NOTE: The compression pressure should not exceed 9,800 N (1,000 kgf, 2,200 lbf).

(cont'd)

Timing Belt Replacement (cont'd)

9. Install the auto-tensioner.

   NOTE: Make sure the pin stays in place.

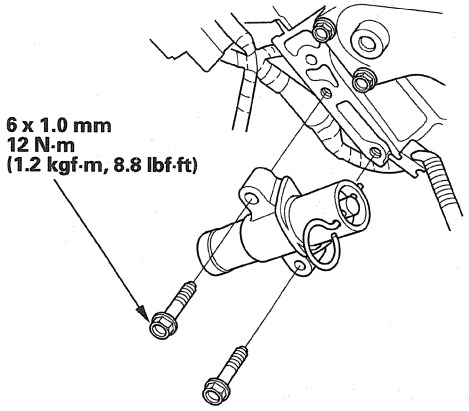

10. Thread in the battery clamp bolt as shown to hold the timing belt adjuster. Tighten it by hand, do not use a wrench.

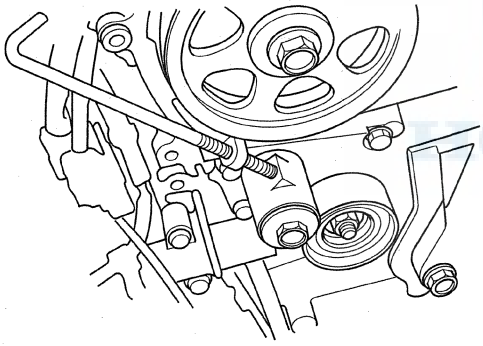

11. Loosely install the idler pulley with a new idler pulley bolt so the pulley can move but does not come off.

12. Install the timing belt in a counterclockwise sequence starting with the drive pulley.

    1 Drive pulley (A)
    2 Idler pulley (B)
    3 Front camshaft pulley (C)
    4 Water pump pulley (D)
    5 Rear camshaft pulley (E)
    6 Adjusting pulley (F)

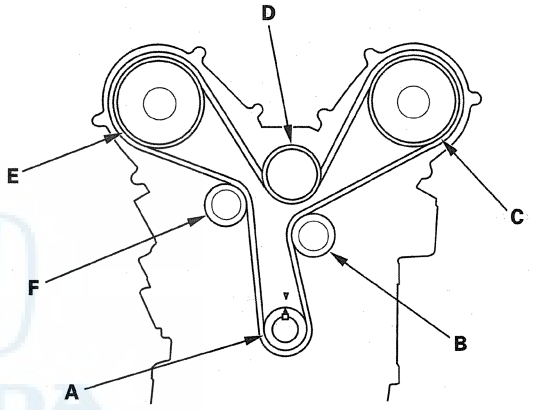

13. Tighten the idler pulley bolt.

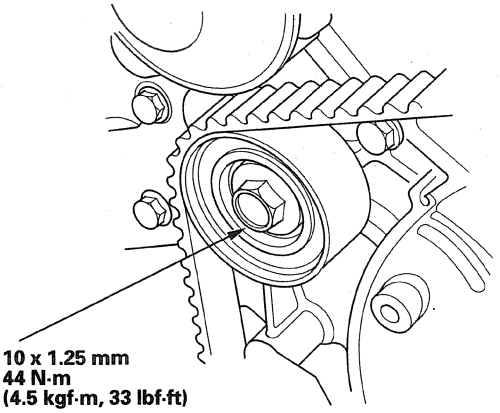

14. Remove the pin from the auto-tensioner.

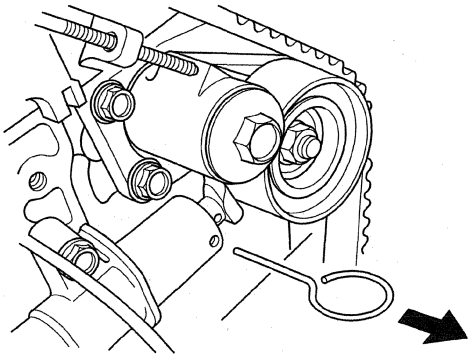

15. Remove the battery clamp bolt from the back cover.

16. Install the side engine mount bracket.

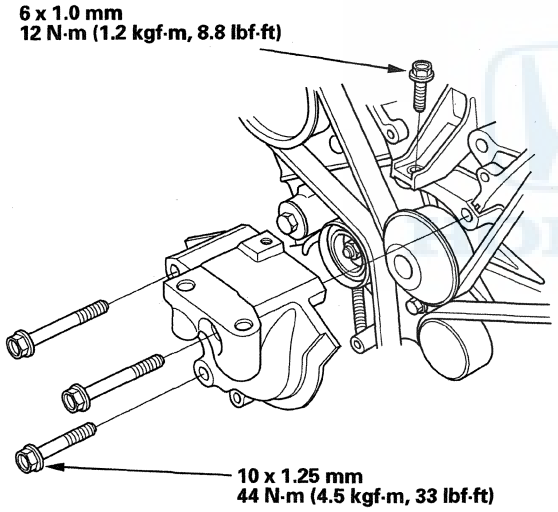

17. Install the timing belt guide plate as shown.

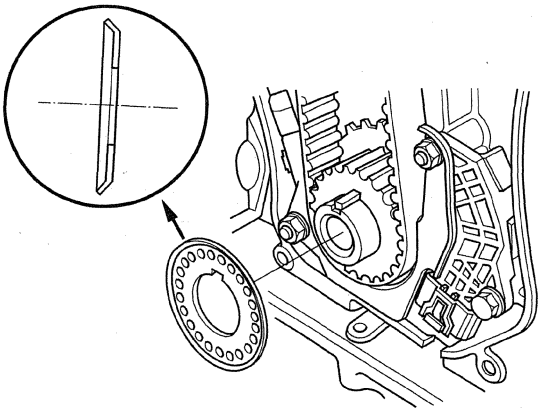

(cont'd)

Timing Belt Replacement (cont'd)

18. Install the lower cover.

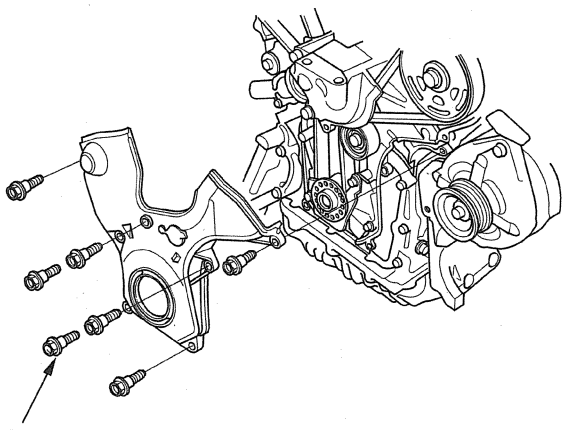

19. Install the crankshaft pulley (see page 6-14).

20. Install the front upper cover (A) and the rear upper cover (B).

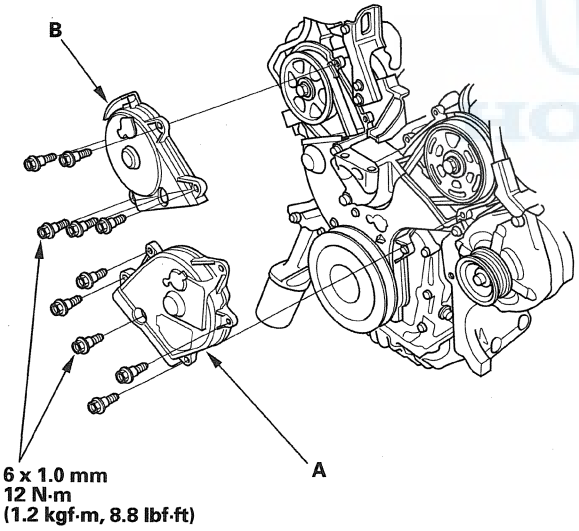

21. Rotate the crankshaft pulley about six turns clockwise so the timing belt positions itself on the pulleys.

22. Turn the crankshaft pulley so the white mark (A) lines up with the pointer (B).

NOTE: The other pointer (C) is not used.

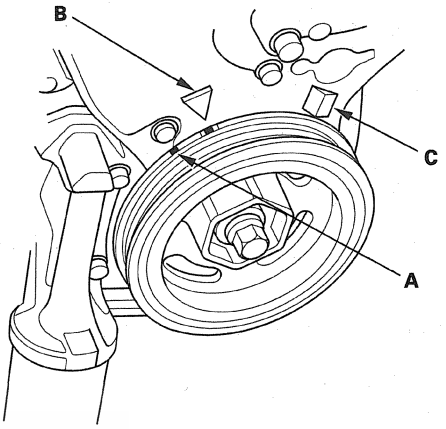

23. Check the camshaft pulley marks.

    - If the camshaft pulley marks are at TDC, go to step 24.
    - If the camshaft pulley marks are not at TDC, remove the timing belt and repeat steps 3 through 23.

FRONT

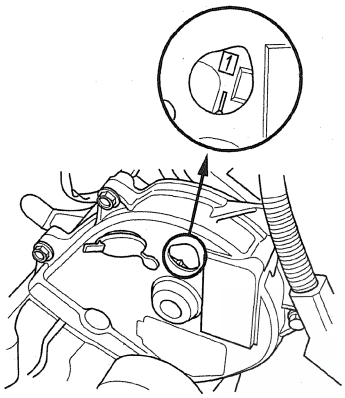

REAR

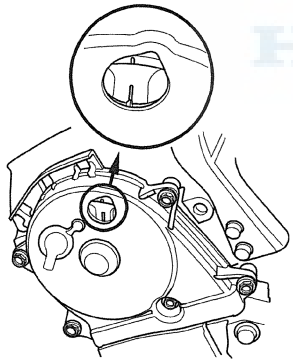

24. Install the upper engine mount bracket (A), then tighten the bolts in the numbered sequence shown.

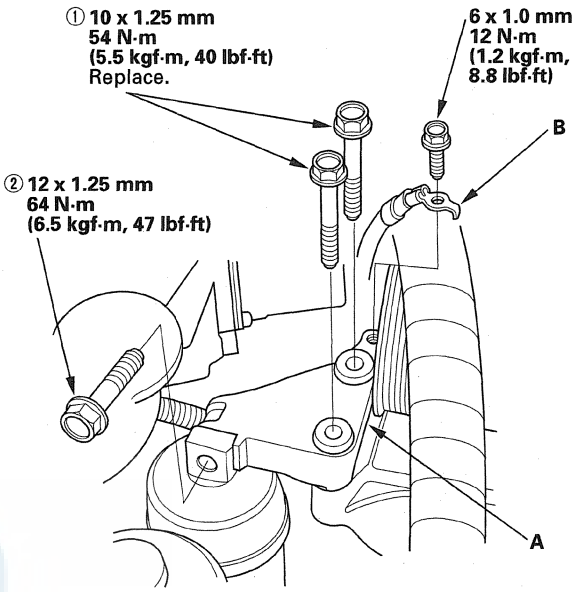

25. Install the ground cable (B).
26. Install the drive belt auto-tensioner (see page 4-35).
27. Install the drive belt (see page 4-33).
28. Install the splash shield.
29. Install the right front wheel.
30. Do the crankshaft position (CKP) pattern clear/CKP pattern learn procedure (see page 11-5).

Timing Belt Drive Pulley Replacement

1. Remove the timing belt (see page 6-16).
2. Remove the crankshaft position (CKP) sensor (see page 11-229).
3. Remove the timing belt drive pulley (A).

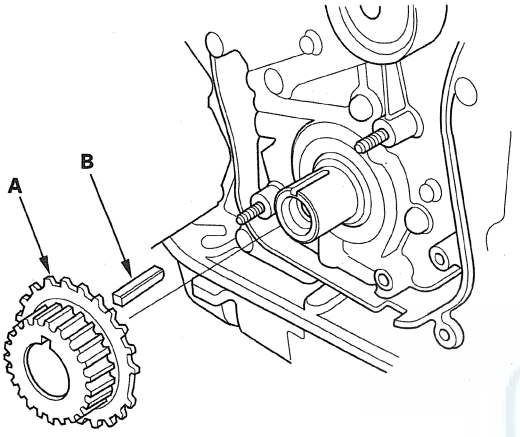

4. Inspect the timing belt drive pulley and the key (B) for damage. If it is cracked or damaged, replace the timing belt drive pulley.
5. Install the timing belt drive pulley.
6. Install the CKP sensor (see page 11-229).
7. Install the timing belt (see page 6-18).

Timing Belt Adjuster Replacement

1. Remove the timing belt (see page 6-16).
2. Remove the battery clamp bolt from the back cover.
3. Remove the auto-tensioner (see step 6 on page 6-23).
4. Remove the bolt (A), then remove the timing belt adjuster (B) and the collar (C).

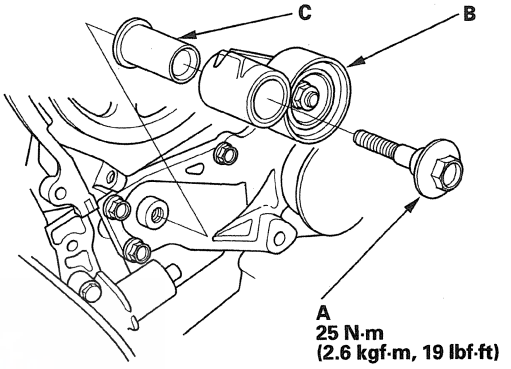

5. Install the timing belt adjuster.
6. Install the timing belt (see page 6-18).

Cylinder Head Cover Removal

Front

1. Remove the intake manifold (see page 9-3).
2. Remove the three ignition coils from the front cylinder head (see page 4-21).
3. Remove the harness holder mounting bolt (A) and the harness clamp (B), then remove the harness holder (C) from the bracket.

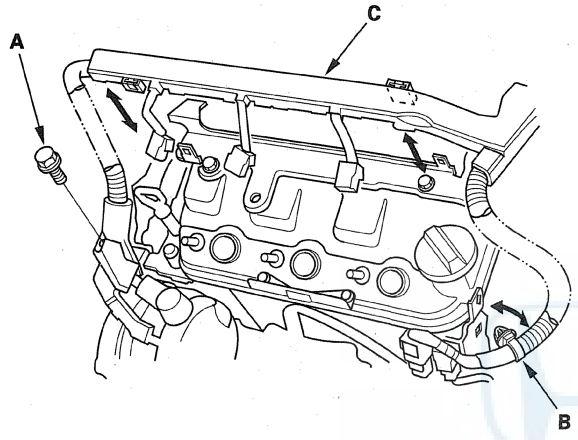

4. Remove the front cylinder head cover.

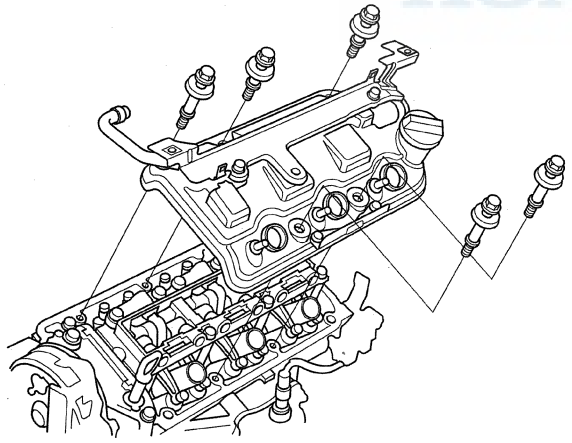

Rear

1. Remove the intake manifold (see page 9-3).
2. Remove the three ignition coils from the rear cylinder head (see page 4-21).
3. Remove the power steering hose clamp mounting bolt (A), the harness holder mounting bolts (B), the harness clamp (C), and the breather hose (D).

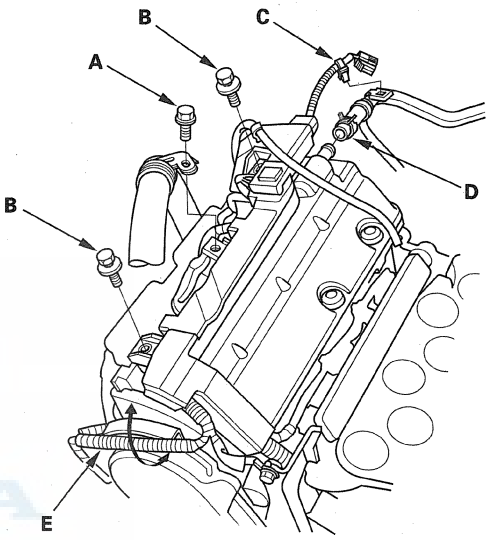

4. Remove the wire harness (E) from the rear upper cover.
5. Remove the rear cylinder head cover.

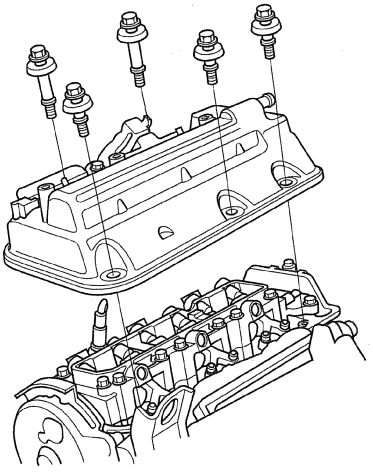

Cylinder Head Cover Installation

Front

1. Check the spark plug seals for damage. If any seal is damaged, replace it.
2. Thoroughly clean the head cover gasket and the groove.
3. Install the head cover gasket (A) in the groove of the cylinder head cover (B). Make sure the head cover gasket is seated securely.

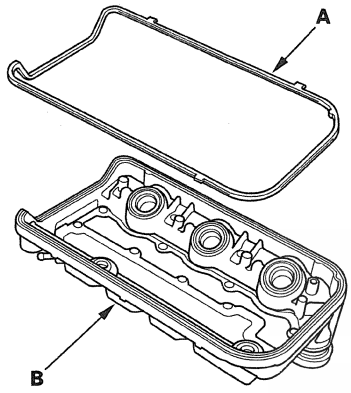

4. Remove all of the old liquid gasket from the rocker shaft holder and the cylinder head.
5. Clean the head cover contacting surfaces with a shop towel.
6. Apply liquid gasket, P/N 08717-0004, 08718-0001, 08718-0003, or 08718-0009, evenly to the rocker shaft holder mating areas (A). Install the component within 5 minutes of applying the liquid gasket.

   NOTE:
   - If you apply liquid gasket P/N 08718-0012, the component must be installed within 4 minutes.
   - If too much time has passed after applying the liquid gasket, remove the old liquid gasket and residue, then reapply the new liquid gasket.

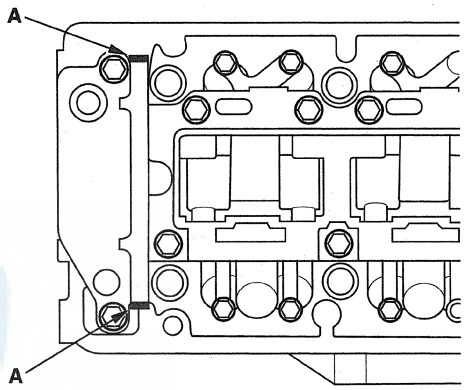

7. Set the spark plug seals (A) on the spark plug tubes, and install the front cylinder head cover (B).

   NOTE:
   - Wait at least 30 minutes before filling the engine with oil.
   - Do not run the engine for at least 3 hours after installing the cylinder head cover.

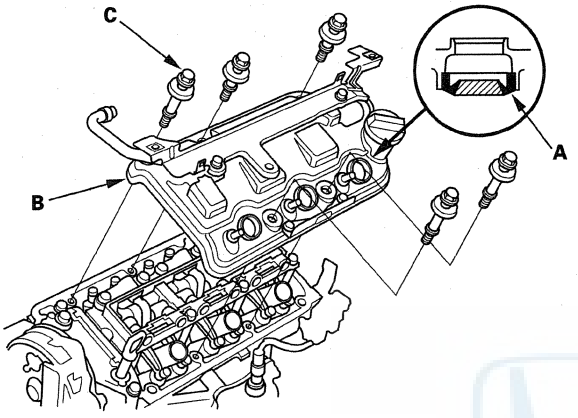

8. Inspect the spark plug seals for damage.

9. Inspect the cover washers (C). Replace any washer that is damaged or deteriorated.

10. Tighten the bolts in three steps. In the final step torque all bolts, in sequence, 12 N·m (1.2 kgf·m, 8.8 lbf·ft).

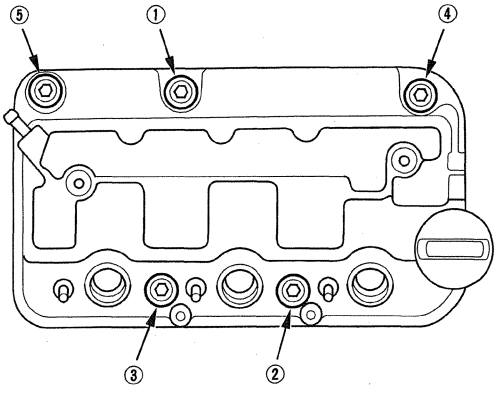

11. Install the harness holder (A) to the bracket, then install the harness holder mounting bolt (B) and the harness clamp (C).

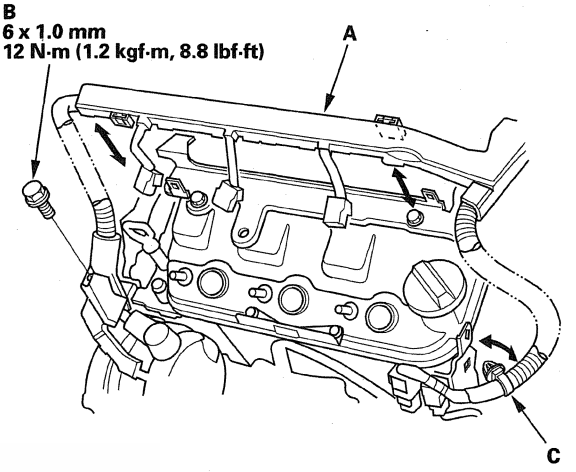

12. Install the three ignition coils to the front cylinder head (see page 4-21).

13. Install the intake manifold (see page 9-4).

(cont'd)

Cylinder Head Cover Installation (cont'd)

Rear

1. Check the spark plug seals for damage. If any seal is damaged, replace it.
2. Thoroughly clean the head cover gasket and the groove.
3. Install the head cover gasket (A) in the groove of the cylinder head cover (B). Make sure the head cover gasket is seated securely.

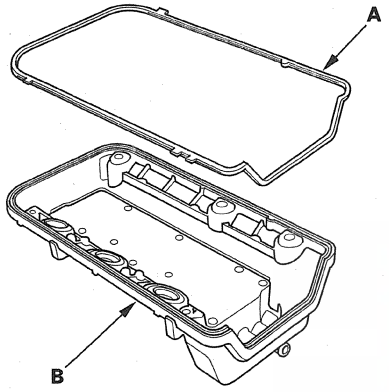

4. Remove all of the old liquid gasket from the rocker shaft holder and the cylinder head.
5. Clean the head cover contacting surfaces with a shop towel.
6. Apply liquid gasket, P/N 08717-0004, 08718-0001, 08718-0003, or 08718-0009, evenly to the rocker shaft holder mating areas (A). Install the component within 5 minutes of applying the liquid gasket.

   NOTE:
   - If you apply liquid gasket P/N 08718-0012, the component must be installed within 4 minutes.
   - If too much time has passed after applying the liquid gasket, remove the old liquid gasket and residue, then reapply the new liquid gasket.

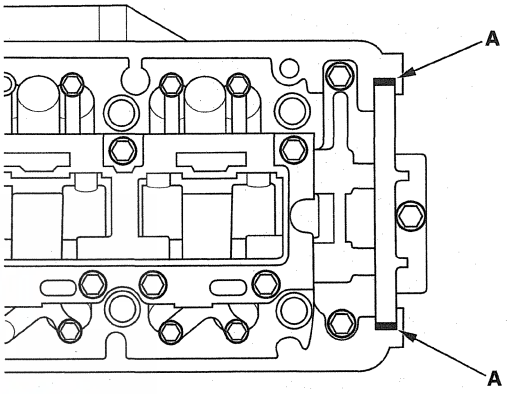

7. Set the spark plug seals (A) on the spark plug tubes, and install the rear cylinder head cover (B).

   NOTE:
   - Wait at least 30 minutes before filling the engine with oil.
   - Do not run the engine for at least 3 hours after installing the cylinder head cover.

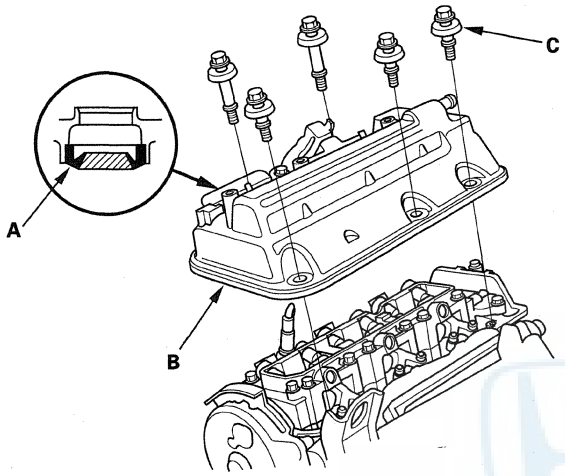

8. Inspect the spark plug seals for damage.

9. Inspect the cover washers (C). Replace any washer that is damaged or deteriorated.

10. Tighten the bolts in three steps. In the final step torque all bolts, in sequence, 12 N·m (1.2 kgf·m, 8.8 lbf·ft).

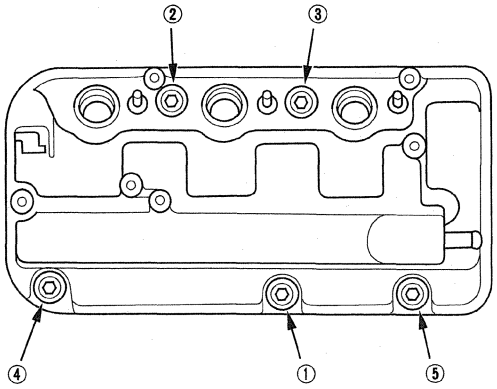

11. Install the wire harness (A) to the rear upper cover.

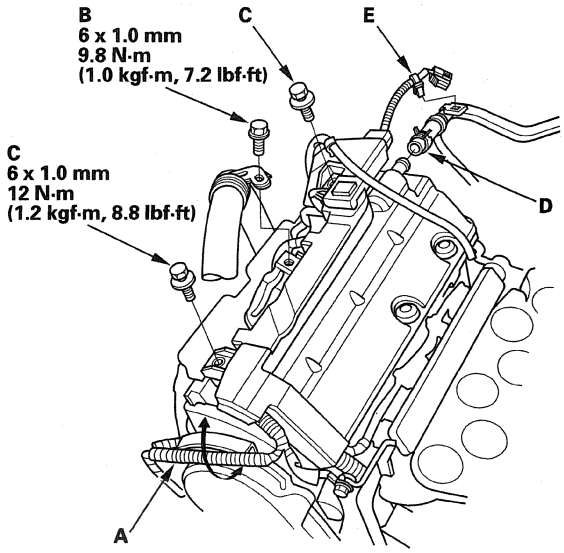

12. Install the power steering hose clamp mounting bolt (B), the harness holder mounting bolts (C), the breather hose (D), and the harness clamp (E).

13. Install the three ignition coils to the rear cylinder head (see page 4-21).

14. Install the intake manifold (see page 9-4).

Cylinder Head Removal

NOTE:
- Use fender covers to avoid damaging painted surfaces.
- To avoid damaging the wiring and terminals, unplug the wiring connectors carefully while holding the connector portion.
- To avoid damaging the cylinder head, wait until the engine coolant temperature drops below 100 °F (38 °C) before loosening the cylinder head bolts.
- Mark all wiring and hoses to avoid misconnection. Also, be sure that they do not contact any other wiring or hoses, or interfere with any other parts.

1. Relieve the fuel pressure (see page 11-332).
2. Do the battery terminal disconnection procedure (see page 22-91).
3. Drain the engine coolant (see page 10-6).
4. Remove the drive belt (see page 4-33).
5. Remove the power steering (P/S) pump (A) and the bolt (B) securing the P/S hose clamp.

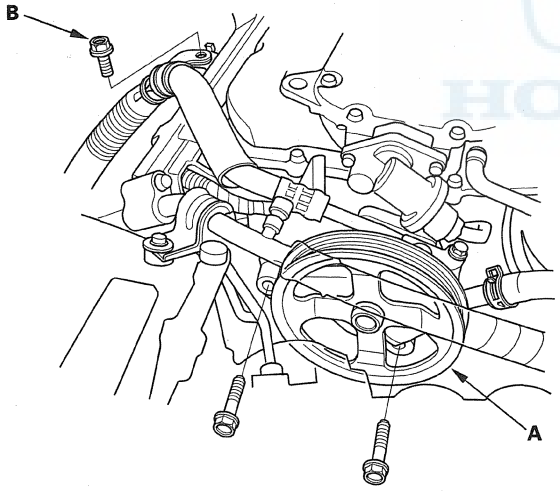

6. Remove the alternator (see page 4-36).
7. Remove the intake manifold (see page 9-3).
8. Remove the six ignition coils (see page 4-21).
9. Remove the timing belt (see page 6-16).
10. Remove the cylinder head covers (see page 6-29).
11. Remove the following engine wire harness connectors and wire harness clamps from the cylinder head:
    - Six injector connectors
    - Engine coolant temperature (ECT) sensor 1 connector
    - Oil pressure switch connector
    - Camshaft position (CMP) sensor connector
    - Rocker arm oil control solenoid connector
    - Rocker arm oil pressure switch connector
    - Front and rear air fuel ratio (A/F) sensor connector
    - Front and rear secondary heated oxygen sensor (secondary HO2S) connector
12. Remove the front warm up three way catalytic converter (front WU-TWC) (see page 11-373) and the rear warm up three way catalytic converter (rear WU-TWC) (see page 11-374).
13. Remove the quick-connect fitting cover (A), then disconnect the fuel feed hose (B) (see page 11-341).

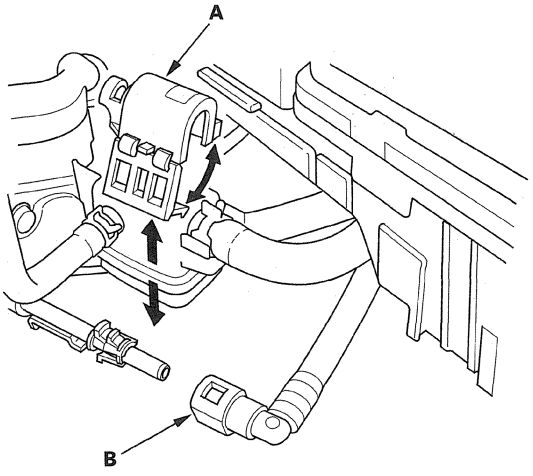

14. Remove the connector bracket from the front cylinder head.

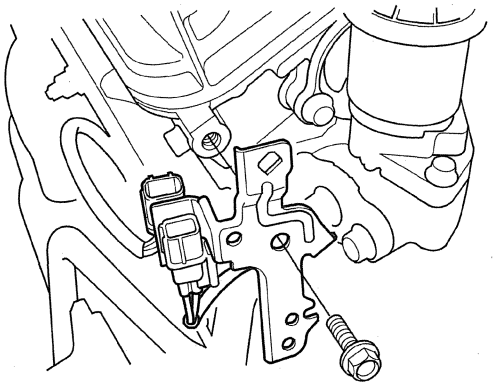

15. Remove the engine mount control solenoid valve bracket and the harness clamp bracket from the rear cylinder head.

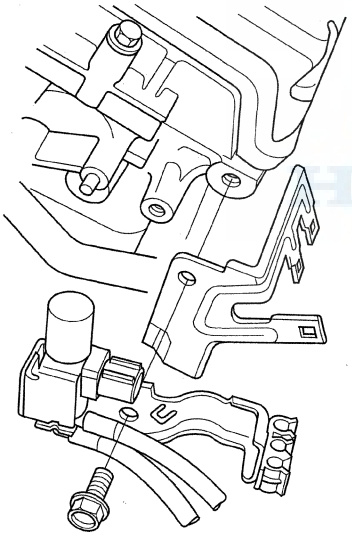

16. Remove the fuel rails (see page 11-223).

17. Remove the water passage (see page 10-9).

18. Remove the front and rear camshaft pulleys (A) and the front and rear back covers (B).

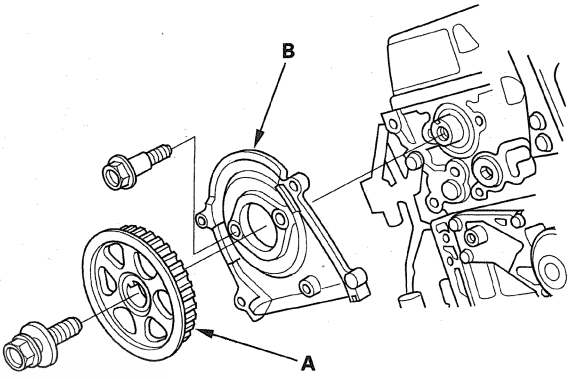

(cont'd)

Cylinder Head Removal (cont'd)

19. Remove the cylinder head bolts. To prevent warpage, loosen the bolts in sequence 1/3 turn at a time; repeat the sequence until all bolts are loosened.

FRONT

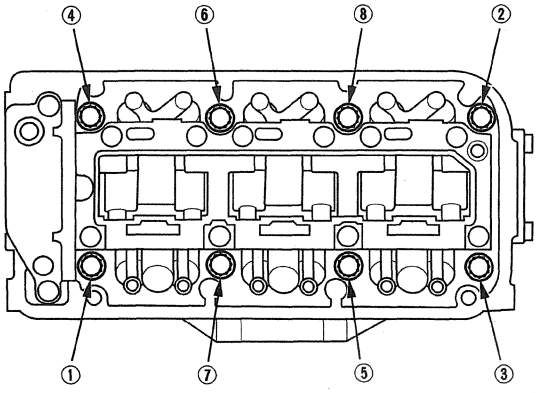

REAR

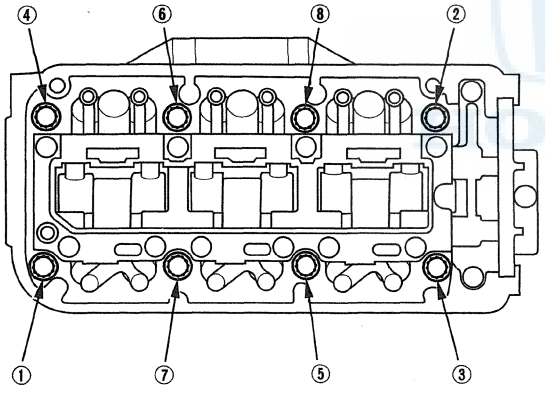

20. Remove the cylinder heads.

Camshaft Replacement

Front

1. Do the battery removal procedure (see page 22-92).
2. Drain the engine coolant (see page 10-6).
3. Disconnect the upper radiator hose (A) and the lower radiator hose (B).

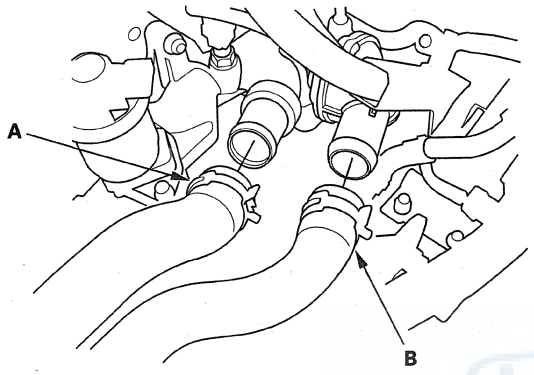

4. Remove the exhaust gas recirculation (EGR) valve (see page 11-388).
5. Remove the stud bolts.

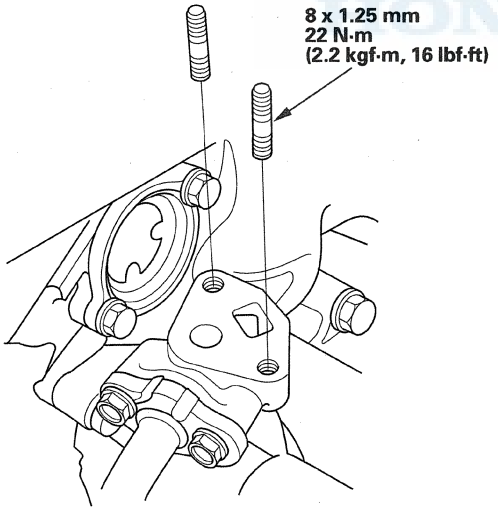

6. Remove the timing belt (see page 6-16).
7. Remove the rocker arm assembly (see page 6-40).
8. Remove the front camshaft pulley.
9. Remove the thrust cover (A), then remove the front camshaft (B).

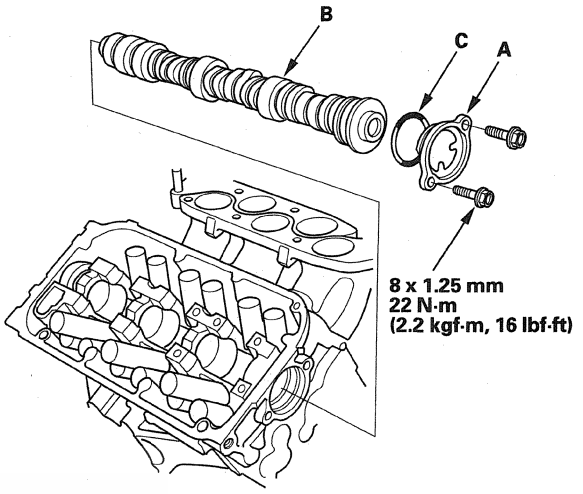

10. Install the front camshaft in the reverse order of removal. Always use a new O-ring (C). Apply new engine oil to the journals and the cam lobes.
11. Install the rocker arm assembly (see page 6-55).
12. Install the timing belt (see page 6-18).
13. Install the stud bolts, then install the EGR valve (see page 11-388).
14. Install the upper radiator hose and the lower radiator hose.
15. Adjust the valve clearance (see page 6-10).
16. Do the battery installation procedure (see page 22-92).
17. Fill the radiator with engine coolant and bleed the air out (see step 8 on page 10-7).
18. Do the crankshaft position (CKP) pattern clear/CKP pattern learn procedure (see page 11-5).

(cont'd)

Camshaft Replacement (cont'd)

Rear

1. Relieve the fuel pressure (see page 11-332).
2. Remove the quick-connect fitting cover, then disconnect the fuel feed hose (see page 11-341).
3. Remove the intake manifold (see page 9-3).
4. Remove the purge joint (A).

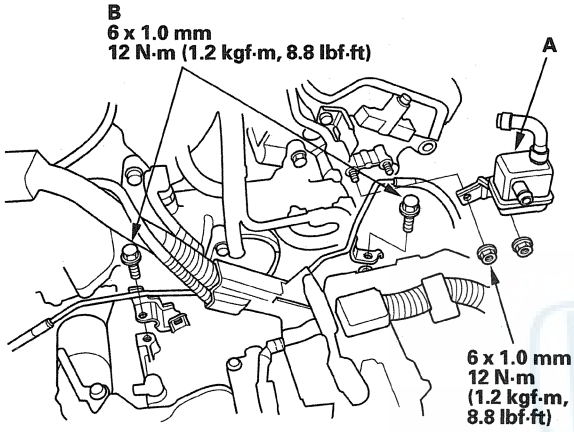

5. Remove the two bolts (B) securing the vacuum line.
6. Remove the timing belt (see page 6-16).
7. Remove the rocker arm assembly (see page 6-40).
8. Remove the rear camshaft pulley.
9. Remove the thrust cover (A), then remove the rear camshaft (B).

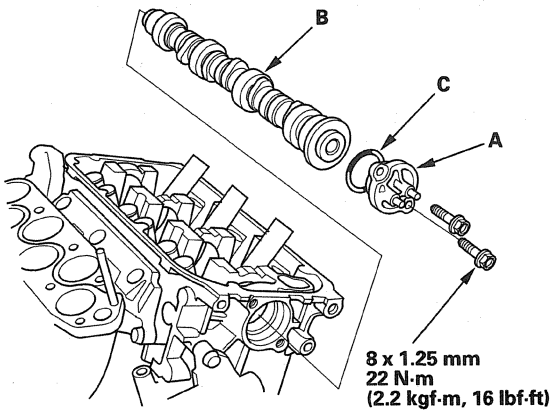

10. Install the rear camshaft in the reverse order of removal. Always use a new O-ring (C). Apply new engine oil to the journals and cam lobes.
11. Install the rocker arm assembly (see page 6-57).
12. Install the timing belt (see page 6-18).
13. Install the vacuum line and the purge joint.
14. Install the intake manifold (see page 9-4).
15. Connect the fuel feed hose (see page 11-344), then install the quick-connect fitting cover.
16. Adjust the valve clearance (see page 6-10).

17. Inspect for fuel leaks. Turn the ignition switch to ON (II) (do not operate the starter) so the fuel pump runs for about 2 seconds and pressurizes the fuel line. Repeat this operation three times, then check for fuel leakage at any point in the fuel line.

18. Do the crankshaft position (CKP) pattern clear/CKP pattern learn procedure (see page 11-5).

Cylinder Head Inspection for Warpage

1. Remove the cylinder head (see page 6-34).

2. Inspect the camshaft (see page 6-45).

3. Check the cylinder head for warpage. Measure along the edges, and three ways across the center.

   - If warpage is less than 0.05 mm (0.002 in), cylinder head resurfacing is not required.
   - If warpage is between 0.05 mm (0.002 in) and 0.2 mm (0.008 in), resurface the cylinder head.
   - Maximum resurface limit is 0.2 mm (0.008 in) based on a height of 121 mm (4.76 in).

Cylinder Head Height
Standard (New): 120.95—121.05 mm (4.762—4.766 in)

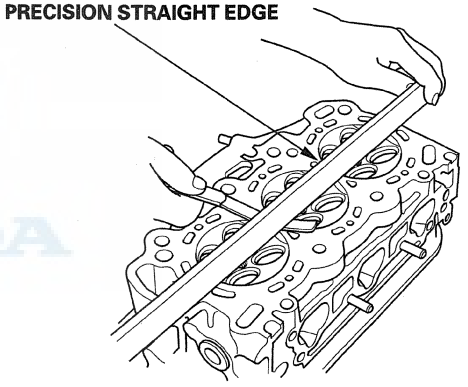

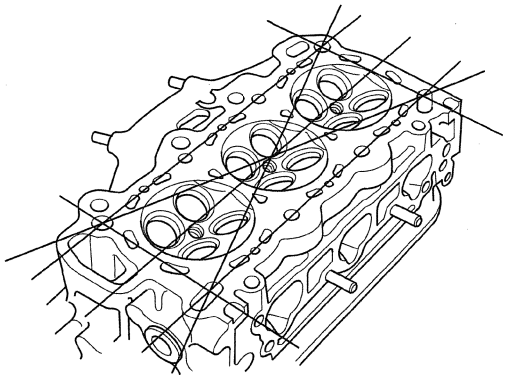

Rocker Arm Assembly Removal

Front

1. Remove the cylinder head cover (see page 6-29).
2. Loosen the locknuts and the adjusting screws (A).

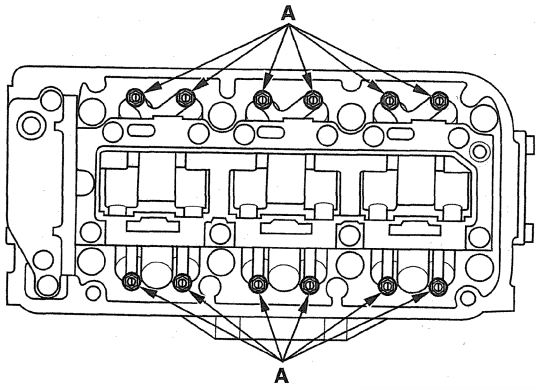

3. Remove the rocker shaft bridge mounting bolts, the rocker shaft holder mounting bolts, and the rocker arm assembly.

-1 Loosen the rocker shaft bridge mounting bolts and the rocker shaft holder mounting bolts in sequence two turns at a time, to prevent damaging the valves or the rocker arm assembly.

-2 When removing the rocker arm assembly, do not remove the rocker shaft bridge mounting bolts and the rocker shaft holder mounting bolts. The bolts will keep the springs and the rocker arms on the shafts.

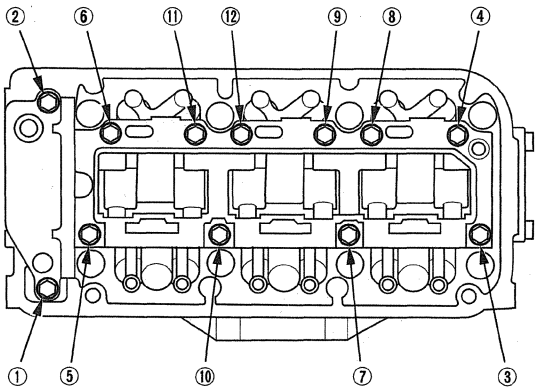

Rear

4. Remove the cylinder head cover (see page 6-29).
5. Loosen the locknuts and the adjusting screws (A).

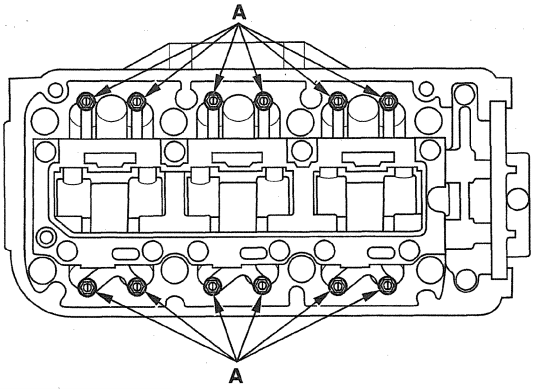

6. Remove the rocker shaft bridge mounting bolts, the rocker shaft holder mounting bolts, and the rocker arm assembly.

-1 Loosen the rocker shaft bridge mounting bolts and the rocker shaft holder mounting bolts in sequence two turns at a time, to prevent damaging the valves or the rocker arm assembly.

-2 When removing the rocker arm assembly, do not remove the rocker shaft bridge mounting bolts and the rocker shaft holder mounting bolts. The bolts will keep the rocker arms on the shafts.

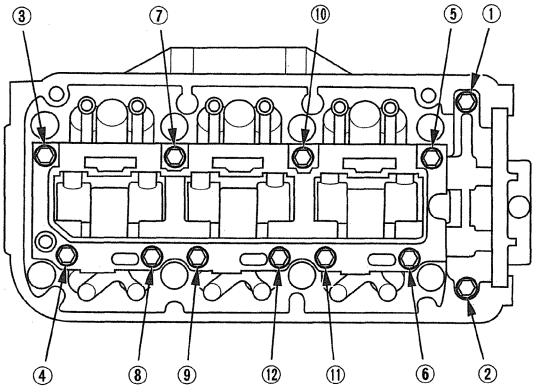

Rocker Arm and Shaft Disassembly/Reassembly

Front

NOTE:

- Identify parts as they are removed so they can be reinstalled in their original locations.
- Inspect the rocker shafts and the rocker arms (see page 6-43).
- If reused, the rocker arms must be installed in their original locations.
- When removing or installing the rocker arm assembly, do not remove the mounting bolts. The bolts will keep the rocker arms, the rocker shaft bridge, and the rocker shaft holder on the shaft.
- If the rocker shaft cannot be removed or installed by hand, remove or install the rocker shaft by heating the rocker shaft bridge.
- Prior to reassembling, clean all the parts in solvent, dry them, and apply new engine oil to all contact points and bearing surfaces.
- When replacing the rocker arm assembly, remove the fastening hardware from the new rocker arm assembly.
- Never remove any of the circlips that retain the lost motion assemblies in the rocker shaft bridge. The circlips are not available separately, and are factory installed in the rocker shaft bridge. To remove the lost motion assemblies, first remove the rocker shafts and the rocker arms.

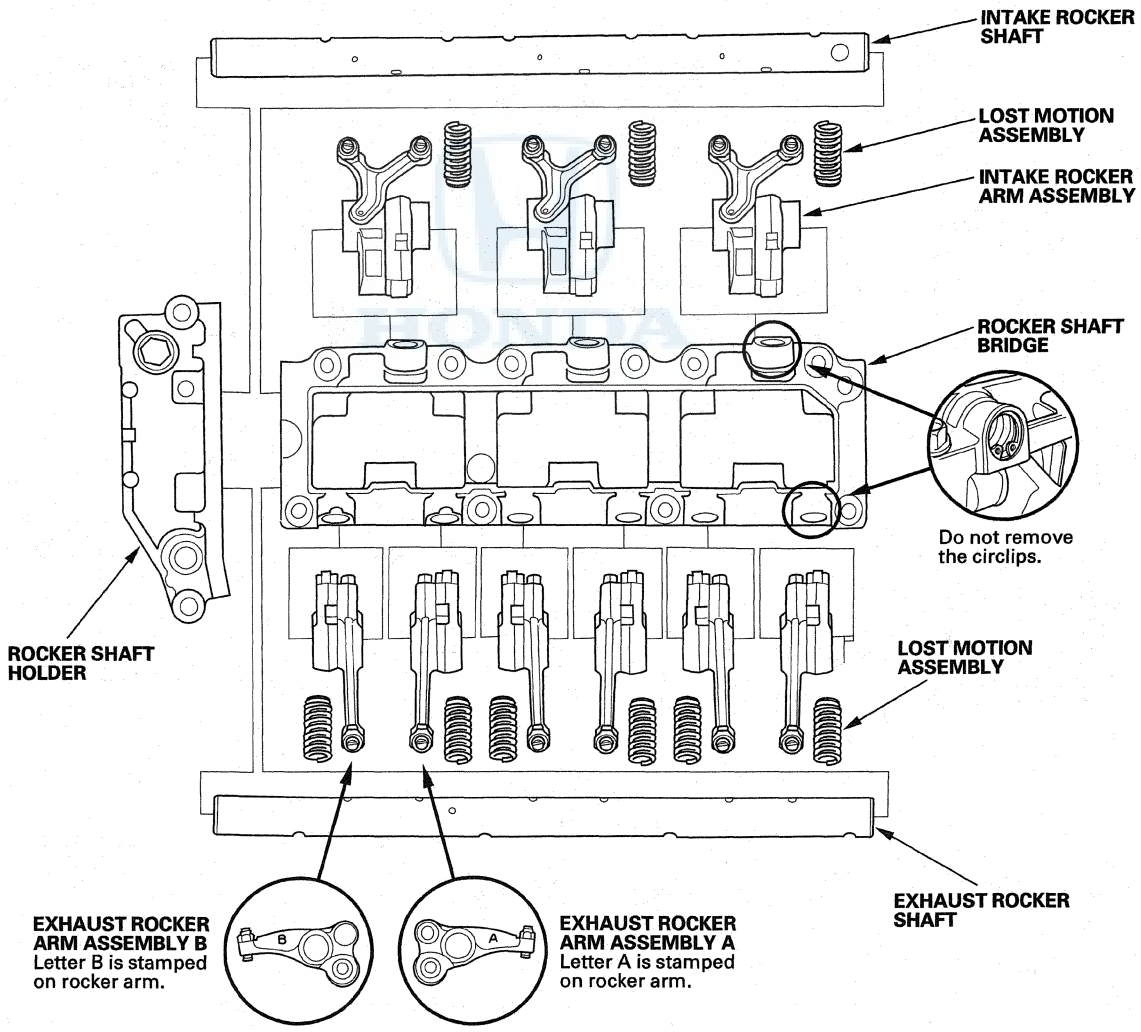

(cont'd)

Rocker Arm and Shaft Disassembly/Reassembly (cont'd)

Rear

NOTE:
- Identify parts as they are removed so they can be reinstalled in their original locations.
- Inspect the rocker shafts and the rocker arms (see page 6-43).
- If reused, the rocker arms must be installed in their original locations.
- When removing or installing the rocker arm assembly, do not remove the mounting bolts. The bolts will keep the rocker arms, the rocker shaft bridge, and the rocker shaft holder on the shaft.
- If the rocker shaft cannot be removed or installed by hand, remove or install the rocker shaft by heating the rocker shaft bridge.
- Prior to reassembling, clean all the parts in solvent, dry them, and apply new engine oil to all contact points and bearing surfaces.
- When replacing the rocker arm assembly, remove the fastening hardware from the new rocker arm assembly.
- Never remove any of the circlips that retain the lost motion assemblies in the rocker shaft bridge. The circlips are not available separately, and are factory installed in the rocker shaft bridge. To remove the lost motion assemblies, first remove the rocker shafts and the rocker arms.

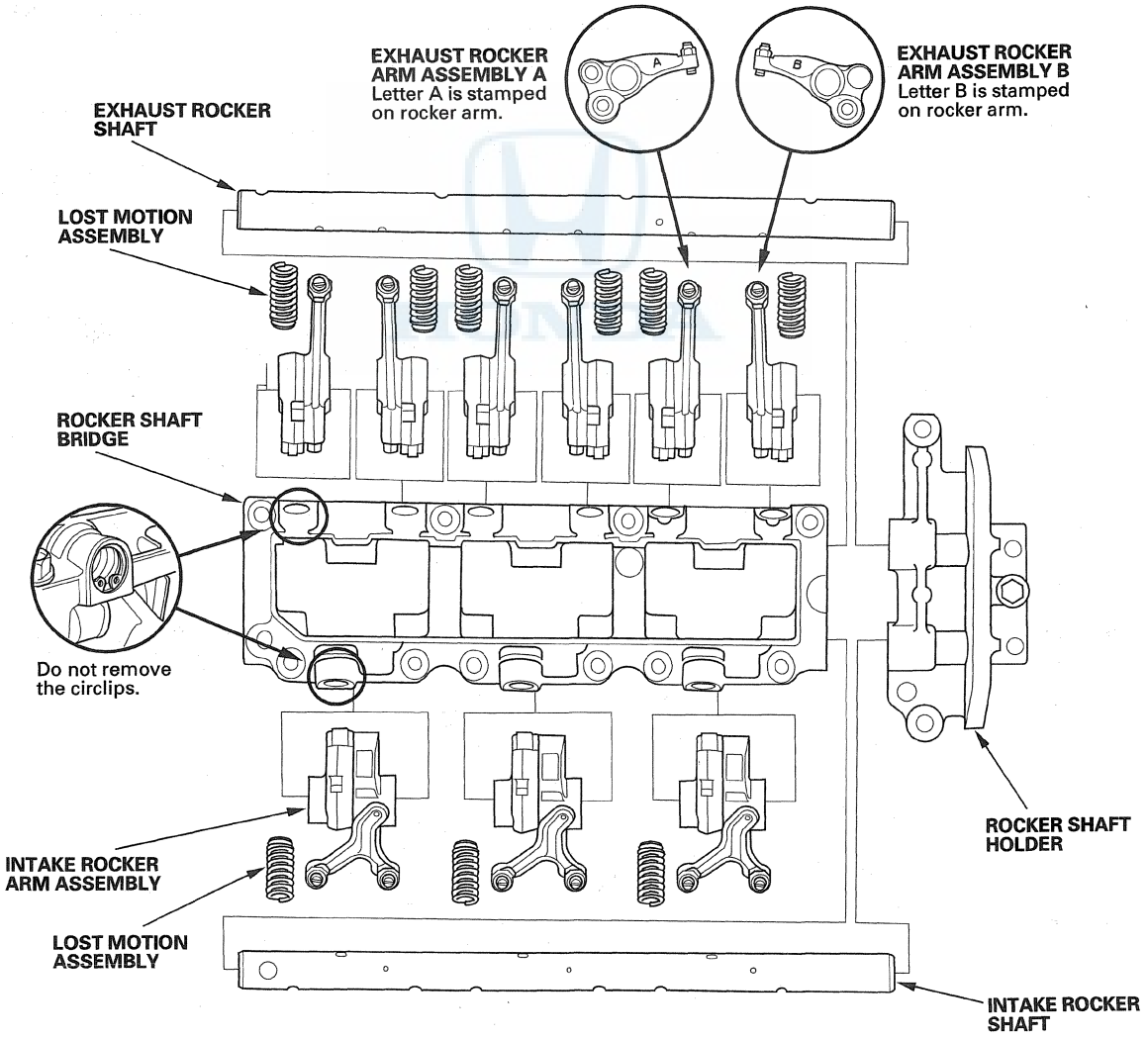

Rocker Arm and Shaft Inspection

1. Remove the rocker arm assembly (see page 6-40).
2. Disassemble the rocker arm assembly (see page 6-41).
3. Measure the diameter of the shaft at the first rocker location.

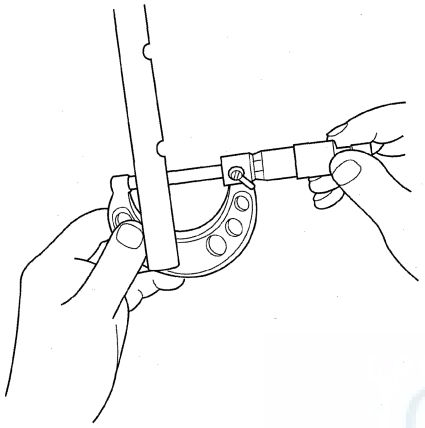

4. Zero the gauge (A) to the shaft diameter.

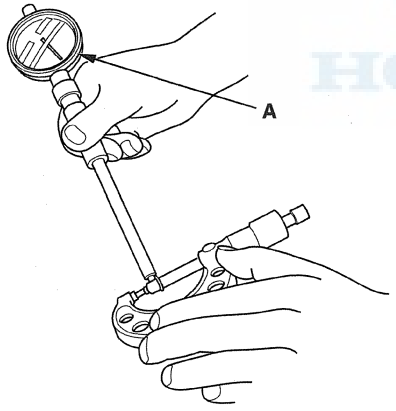

5. Measure the inside diameter of the rocker arm, and check it for an out-of-round condition.

Intake Rocker Arm-to-Shaft Clearance:
Standard (New): 0.015—0.046 mm (0.0006—0.0018 in)
Service Limit: 0.046 mm (0.0018 in)

Exhaust Rocker Arm-to-Shaft Clearance:
Standard (New): 0.015—0.046 mm (0.0006—0.0018 in)
Service Limit: 0.046 mm (0.0018 in)

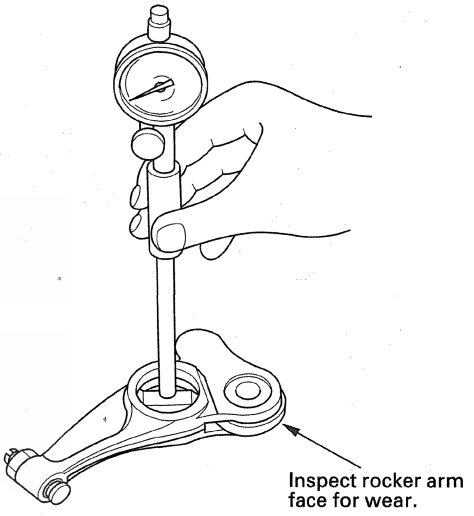

6. Repeat for all rockers and both shafts. If the clearance is over the limit, replace the rocker shaft and all over-tolerance rocker arms. If any intake rocker arm needs replacement, replace all rocker arms in that set (primary and secondary).

(cont'd)

Rocker Arm and Shaft Inspection (cont'd)

VTEC Rocker Arms

7. Inspect the rocker arm piston (A). Slide them into the rocker arms. If they do not move smoothly, replace the rocker arm set.

   NOTE:
   - Apply new engine oil to the rocker arm piston when reassembling.
   - When removing the rocker arm piston, carefully apply air pressure to the oil passage of the rocker arm.

INTAKE

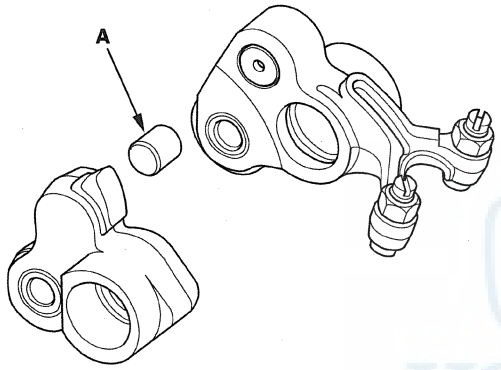

EXHAUST

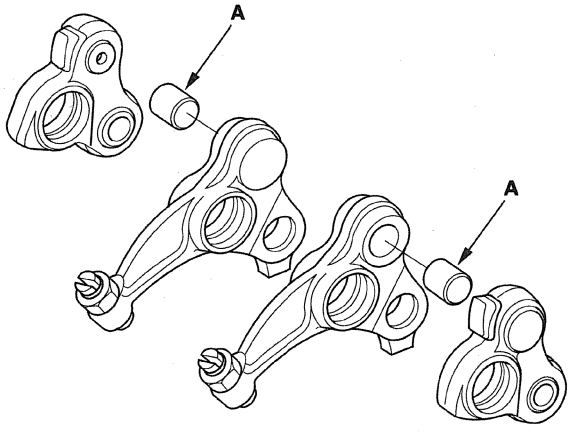

8. Reassemble the rocker arm assembly (see page 6-41).

9. Install the rocker arm assembly (see page 6-55).

Camshaft Inspection

1. Remove the cylinder head (see page 6-34).
2. Remove the rocker arm assembly (see page 6-40).
3. Front: Put the rocker shafts bridge and the rocker shaft holder on the front cylinder head, then tighten the bolts to the specified torque.

Specified Torque
8 x 1.25 mm: 22 N·m (2.2 kgf·m, 16 lbf·ft)

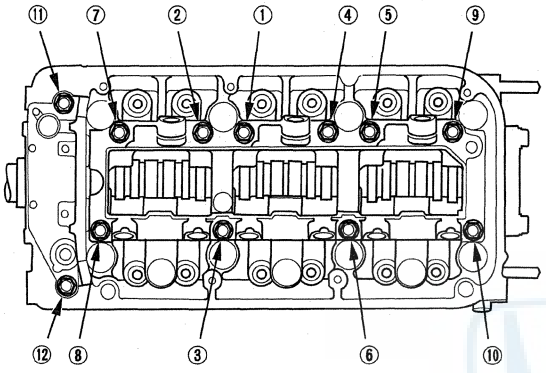

4. Rear: Put the rocker shaft bridge and the rocker shaft holder on the rear cylinder head, then tighten the bolts to the specified torque.

Specified Torque
8 x 1.25 mm: 22 N·m (2.2 kgf·m, 16 lbf·ft)

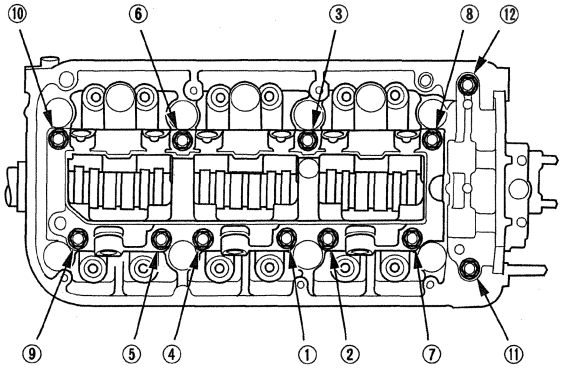

5. Seat the camshaft by pushing it toward the rear of the cylinder head.
6. Zero the dial indicator against the end of the camshaft. Push the camshaft back and forth and read the end play. If the end play is beyond the service limit, replace the thrust cover and recheck. If it is still beyond the service limit, replace the camshaft.

Camshaft End Play
Standard (New): 0.05—0.20 mm (0.002—0.008 in)
Service Limit: 0.20 mm (0.008 in)

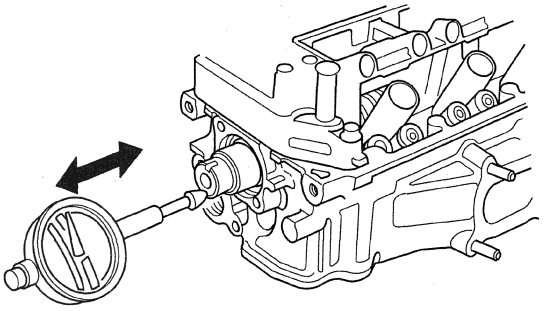

7. Remove the camshaft thrust cover (A), then pull out the camshaft (B).

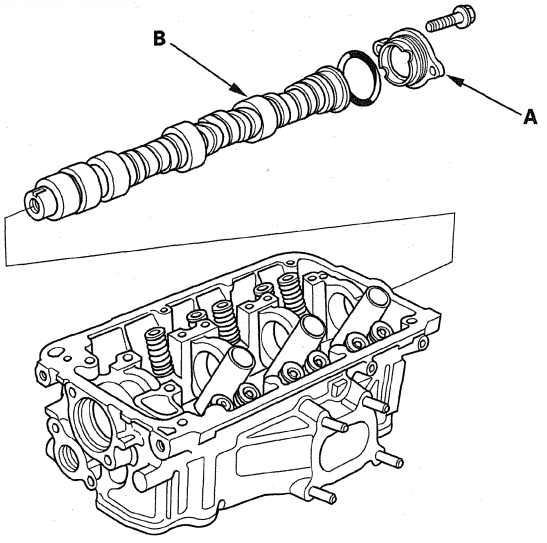

(cont'd)

Camshaft Inspection (cont'd)

8. Wipe the camshaft clean, then inspect the lift ramps. Replace the camshaft if any lobes are pitted, scored, or excessively worn.

9. Measure the diameter of each camshaft journal.

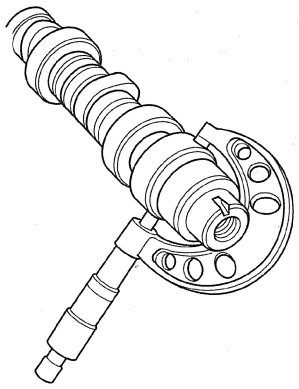

10. Zero the gauge to the journal diameter.

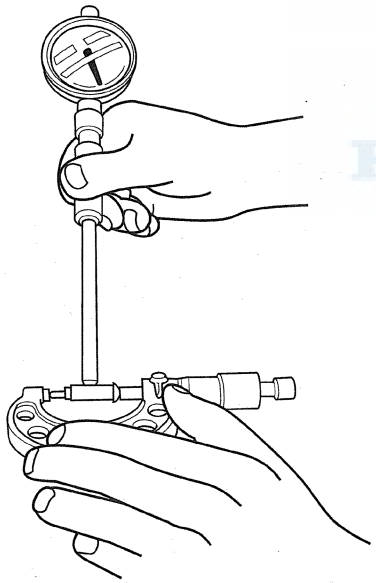

11. Clean the camshaft bearing surfaces in the cylinder head. Measure the inside diameter of each camshaft bearing surface, and check for an out-of-round condition.

- If the camshaft-to-holder clearance is within limits, go to step 13.
- If the camshaft-to-holder clearance is beyond the service limit and the camshaft has been replaced, replace the cylinder head.
- If the camshaft-to-holder clearance is beyond the service limit and the camshaft has not been replaced, go to step 12.

Camshaft-to-Holder Oil Clearance

Standard (New):	**0.050—0.089 mm (0.0020—0.0035 in)**
Service Limit:	**0.15 mm (0.006 in)**

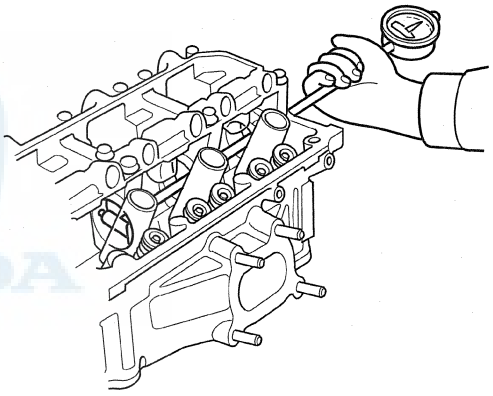

12. Check total runout with the camshaft supported on V-blocks.

    - If the total runout of the camshaft is within the service limit, replace the cylinder head.
    - If the total runout is beyond the service limit, replace the camshaft and recheck the oil clearance. If the oil clearance is still out of tolerance, replace the cylinder head.

Camshaft Total Runout
Standard (New): 0.03 mm (0.001 in) max.
Service Limit: 0.04 mm (0.002 in)

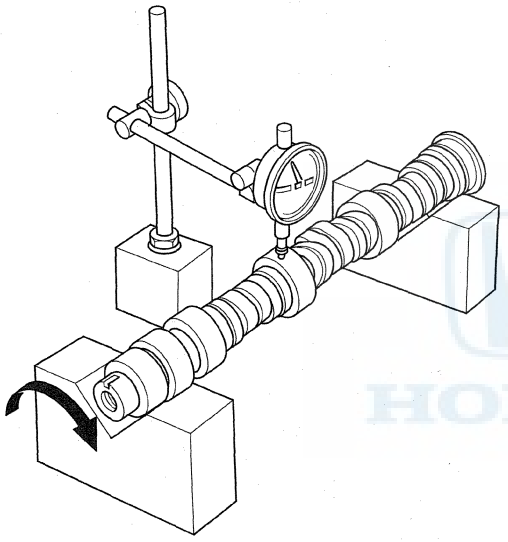

13. Measure the cam lobe height.

Cam Lobe Height Standard (New):

	INTAKE	EXHAUST
PRI	34.299 mm (1.3504 in)	36.734 mm (1.4462 in)
SEC	35.932 mm (1.4146 in)	37.370 mm (1.4713 in)

FRONT

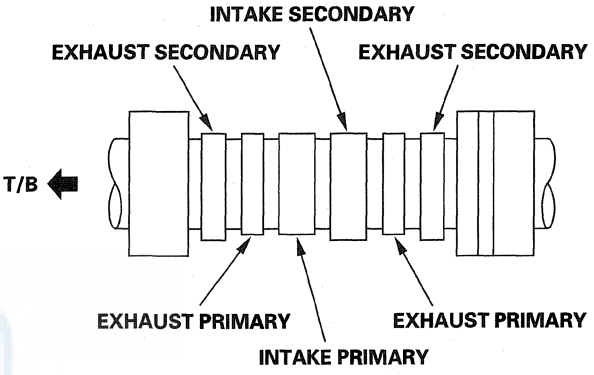

REAR

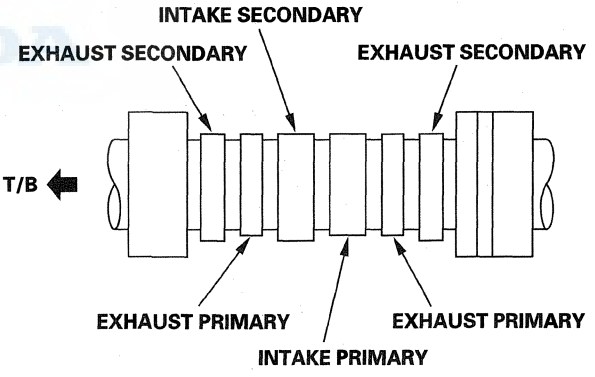

Valve, Spring, and Valve Seal Removal

Special Tools Required
Valve spring compressor attachment
07757-PJ1010A

Identify the valves and the valve springs as they are removed so that each item can be reinstalled in its original position.

1. Remove the cylinder head (see page 6-34).
2. Using an appropriate-sized socket (A) and a plastic mallet (B), lightly tap the spring retainer to loosen the valve cotters.

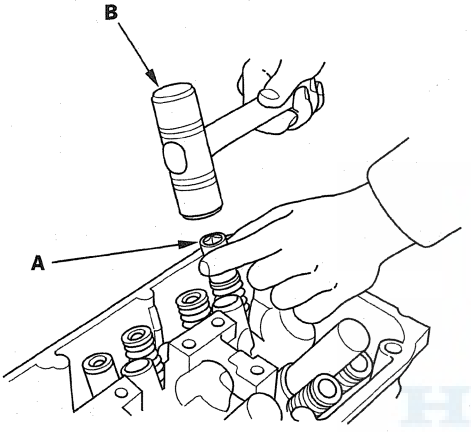

3. Install the valve spring compressor attachment and the valve spring compressor. Compress the spring and remove the valve cotters.

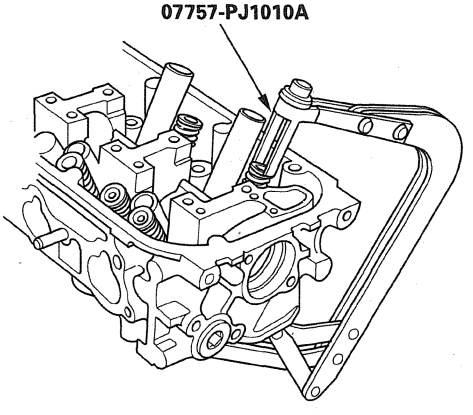

4. Remove the valve spring compressor and the valve spring compressor attachment, then remove the spring retainer, the valve spring, and the valve.
5. Install the valve guide seal remover (A).

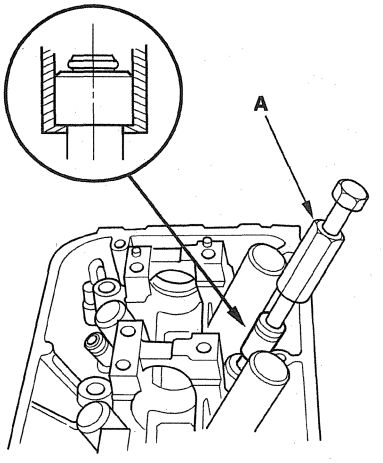

6. Remove the valve seal.

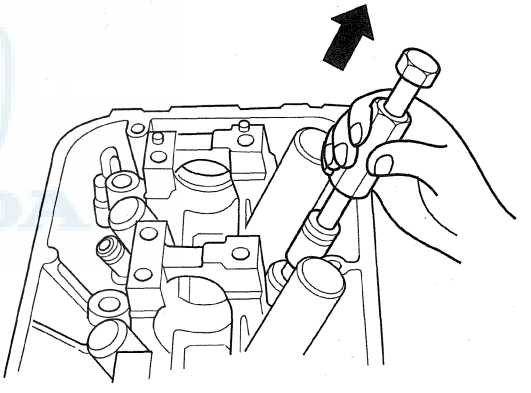

7. Remove the valve spring seat.

Valve Inspection

1. Remove the valves (see page 6-48).

2. Measure the valve in these areas.

Intake Valve Dimensions
A Standard (New): 35.90—36.01 mm (1.413—1.421 in)
B Standard (New): 116.55—117.15 mm (4.589—4.612 in)
C Standard (New): 5.485—5.495 mm (0.2159—0.2163 in)
C Service Limit: 5.455 mm (0.2148 in)

Exhaust Valve Dimensions
A Standard (New): 29.85—30.15 mm (1.175—1.187 in)
B Standard (New): 113.90—114.50 mm (4.484—4.508 in)
C Standard (New): 5.450—5.460 mm (0.2146—0.2150 in)
C Service Limit: 5.420 mm (0.2134 in)

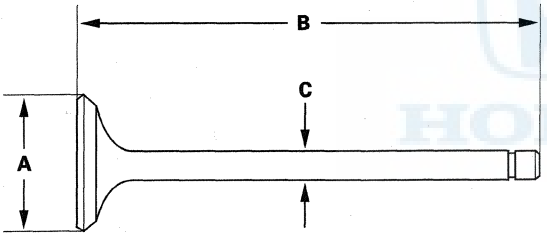

Valve Stem-to-Guide Clearance Inspection

1. Remove the valves (see page 6-48).

2. Subtract the O.D. of the valve stem, measured with a micrometer, from the I.D. of the valve guide, measured with an inside micrometer or a ball gauge. Take the measurements in three places along the valve stem and three places inside the valve guide. The difference between the largest guide measurement and the smallest stem measurement should not exceed the service limit.

Intake Valve Stem-to-Guide Clearance
Standard (New): 0.020—0.045 mm (0.0008—0.0018 in)
Service Limit: 0.08 mm (0.003 in)

Exhaust Valve Stem-to-Guide Clearance
Standard (New): 0.055—0.080 mm (0.0022—0.0031 in)
Service Limit: 0.11 mm (0.004 in)

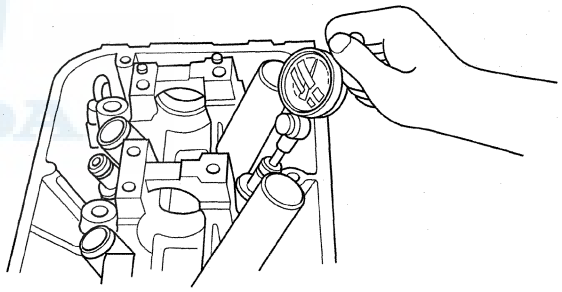

Valve Guide Replacement

Special Tools Required
- Valve guide driver, 5.5 mm 07742-0010100
- Valve guide reamer, 5.5 mm 07HAH-PJ7A100

1. Inspect the valve stem-to-guide clearance (see page 6-49).

2. As illustrated, use a commercially available air-impact valve guide driver (A) modified to fit the diameter of the valve guides. In most cases, the same procedure can be done using the valve guide driver and a conventional hammer.

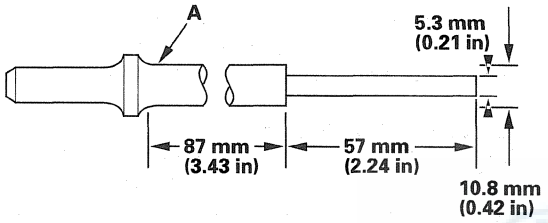

3. Select the proper replacement guides, and chill them in the freezer section of a refrigerator for at least an hour.

4. Use a hot plate or oven to evenly heat the cylinder head to 300 °F (150 °C). Monitor the temperature with a cooking thermometer. Do not get the head hotter than 300 °F (150 °C); excessive heat may loosen the valve seats.

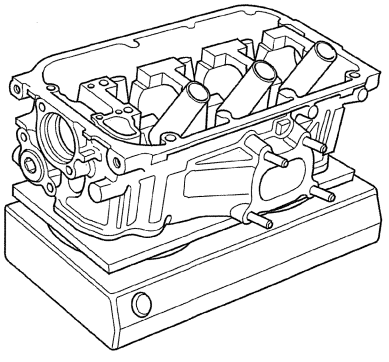

5. Working from the camshaft side, use the driver and an air hammer to drive the guide about 2 mm (0.1 in) towards the combustion chamber. This will knock off some of the carbon and make removal easier. Hold the air hammer directly in line with the valve guide to prevent damaging the driver. Wear safety goggles or a face shield.

6. Turn the head over, and drive the guide out toward the camshaft side of the head.



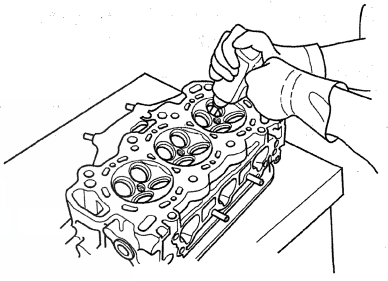

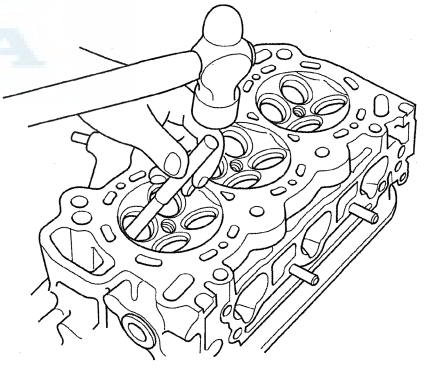

7. If a valve guide still won't move, drill it out with a 8 mm (5/16 in) bit, then try again.

   NOTE: Drill guides only in extreme cases; you could damage the cylinder head if the guide breaks.

8. Remove the new guide(s) from the freezer, one at a time, as you need them.

9. Apply a thin coat of new engine oil to the outside of the new valve guide. Install the guide from the camshaft side of the head; use the valve guide driver to drive the guide to the specified installed height (A) of the guide (B). If you have all 12 guides to do, you may have to reheat the head.

Valve Guide Installed Height
Intake: 21.20—22.20 mm (0.835—0.874 in)
Exhaust: 20.60—21.60 mm (0.811—0.850 in)

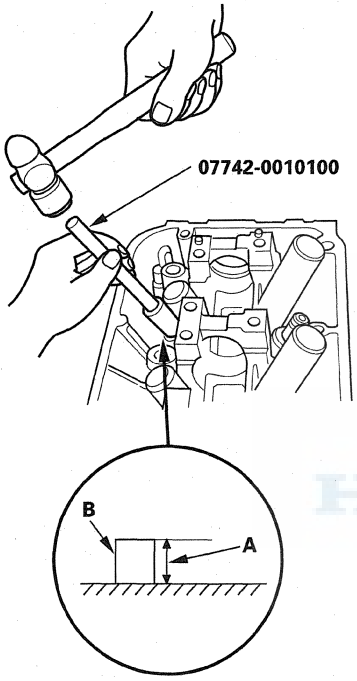

10. Coat both the reamer and the valve guide with cutting oil.

11. Rotate the reamer clockwise the full length of the valve guide bore.

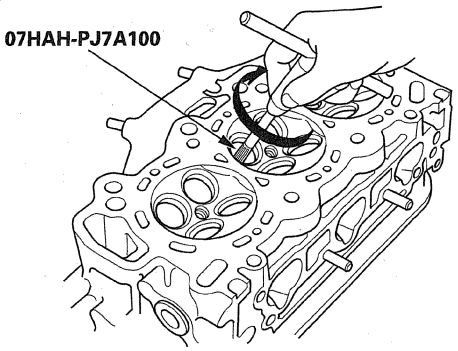

12. Continue to rotate the reamer clockwise while removing it from the bore.

13. Thoroughly wash the guide in detergent and water to remove any cutting residue.

14. Check the clearance with a valve (see page 6-49). Verify that a valve slides in the intake and exhaust valve guides without sticking.

15. Inspect the valve seating. If necessary renew the valve seat using a valve seat cutter (see page 6-52).

Valve Seat Reconditioning

1. Inspect valve stem-to-guide clearance (see page 6-49). If the valve guides are worn, replace them (see page 6-50) before cutting the valve seats.

2. Renew the valve seats in the cylinder head using a valve seat cutter.

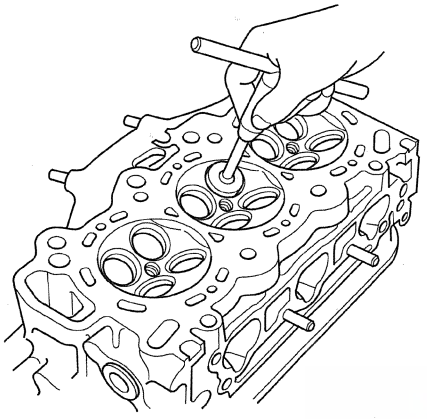

3. Carefully cut a 45 °seat, removing only enough material to ensure a smooth and concentric seat.

4. Bevel the upper edge of the seat with the 30 ° cutter and the lower edge of the seat with the 67.5 ° cutter (intake seat) or the 60 ° cutter (exhaust seat). Check the width of the seat and adjust accordingly.

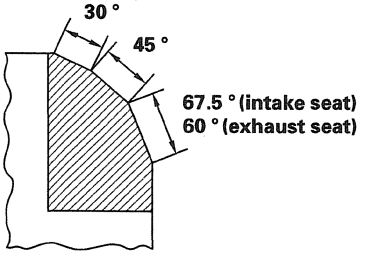

5. Make one more very light pass with the 45 ° cutter to remove any possible burrs caused by the other cutters.

Valve Seat Width
Standard (New): 1.25—1.55 mm (0.049—0.061 in)
Service Limit: 2.00 mm (0.079 in)

6. After resurfacing the seat, inspect it for even valve seating. Apply Prussian Blue compound (A) to the valve face. Insert the valve in its original location in the head, then lift it and snap it closed against the seat several times.

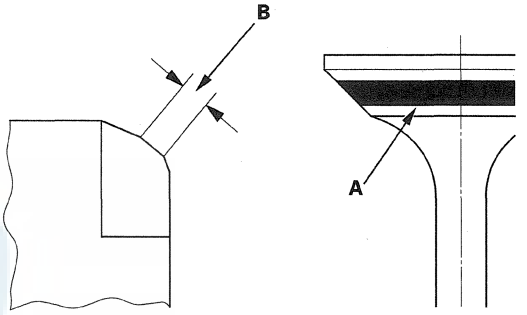

7. The actual valve seating surface (B), as shown by the blue compound, should be centered on the seat.

- If it is too high (closer to the valve stem), you must make a second cut with the 67.5 ° cutter (intake seat) or the 60 ° cutter (exhaust seat) to move it down, then one more cut with the 45 ° cutter to restore seat width.
- If it is too low (closer to the valve edge), you must make a second cut with the 30 ° cutter to move it up, then one more cut with the 45 ° cutter to restore seat width.

NOTE: The final cut should always be made with the 45 ° cutter.

8. Insert the intake and exhaust valves in the head, and measure the valve stem installed height (A).

Intake Valve Stem Installed Height
Standard (New): 46.75—47.55 mm (1.841—1.872 in)
Service Limit: 47.80 mm (1.882 in)

Exhaust Valve Stem Installed Height
Standard (New): 46.68—47.48 mm (1.838—1.869 in)
Service Limit: 47.73 mm (1.879 in)

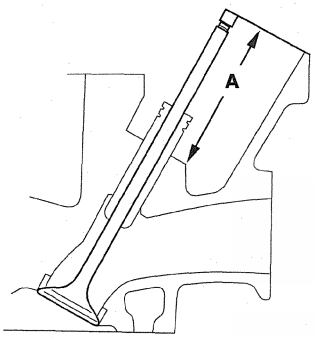

9. If the valve stem installed height is over the service limit, replace the valve and recheck. If it is still over the service limit, replace the cylinder head; the valve seat in the head is too deep.

Valve, Spring, and Valve Seal Installation

Special Tools Required
- Stem seal driver 07PAD-0010000
- Valve spring compressor attachment 07757-PJ1010A

1. Coat the valve stems with new engine oil. Install the valves in the valve guides.
2. Check that the valves move up and down smoothly.
3. Install the spring seats on the cylinder head.
4. Install the new valve seals (A) using the 5.5 mm side of the stem seal driver (B).

   NOTE: Exhaust valve seals (C) have a black spring (D) and intake valve seals (E) have a white or silver spring (F). They are not interchangeable.

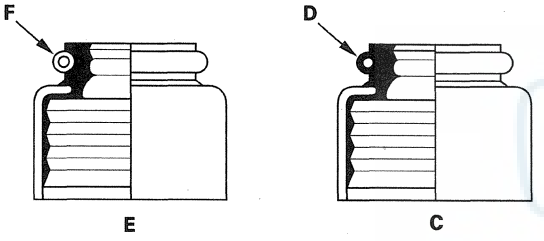

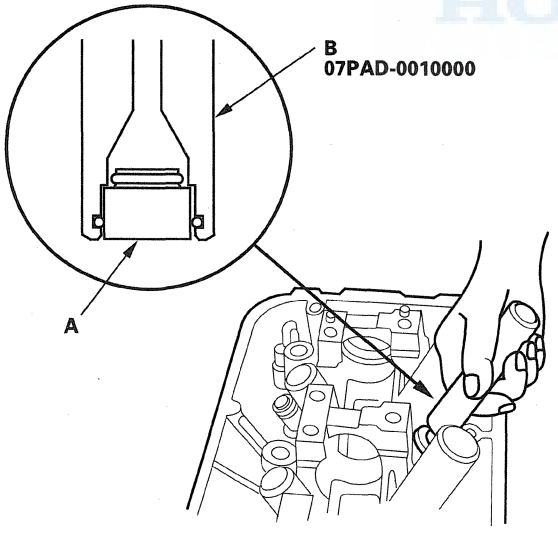

5. Install the valve spring and the spring retainer. Place the end of the valve spring with closely wound coils toward the cylinder head.
6. Install the valve spring compressor attachment and the valve spring compressor. Compress the spring and install the valve cotters.

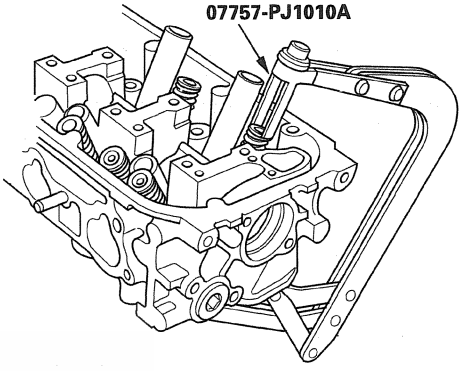

7. Remove the valve spring compressor and the valve spring compressor attachment.
8. Lightly tap the end of each valve stem two or three times with a plastic mallet (A) to ensure proper seating of the valve and valve cotters. Tap the valve stem only along its axis so you do not bend the stem.

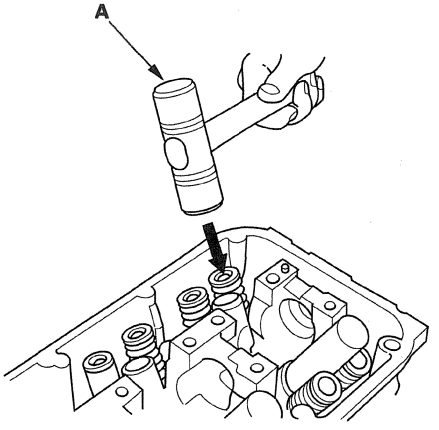

Camshaft, Rocker Arm Assembly, Camshaft Seal, and Pulley Installation

Front

1. Loosen the valve adjusting screws.

2. Apply a light coat of new engine oil around the camshaft oil seal.

3. Gently tap the new camshaft oil seal (A) into the cylinder head.

   -1 Tap the camshaft oil seal in squarely.
   -2 Install the oil seal about 0.5 —1.5 mm (0.02—0.06 in) below the surface of the cylinder head.

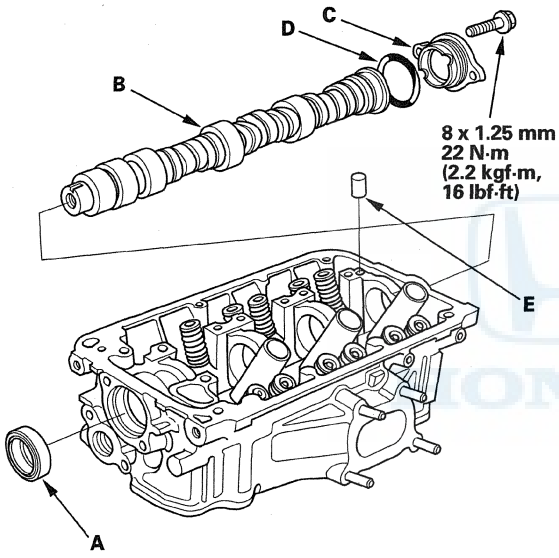

4. Insert the camshaft (B) into the cylinder head, then install the camshaft thrust cover (C). Always use a new O-ring (D). Apply new engine oil to the camshaft journals and lobes.

5. Check that the oil seal lips are not distorted.

6. Install the solid dowel pin (E).

7. If the rocker arm assembly is disassembled, reassemble the rocker arm assembly (see page 6-41).

8. Remove all of the old liquid gasket from the rocker shaft holder and the cylinder head.

9. Apply liquid gasket (P/N 08717-0004, 08718-0001, 08718-0003, or 08718-0009) to the rocker shaft holder mating surface of the cylinder head. Install the component within 5 minutes of applying the liquid gasket.

   NOTE:
   - Apply liquid gasket about 2.5 mm (0.098 in) diameter bead along the broken line (A).
   - If you apply liquid gasket P/N 08718-0012, the component must be installed within 4 minutes.
   - If too much time has passed after applying the liquid gasket, remove the old liquid gasket and residue, then reapply the new liquid gasket.

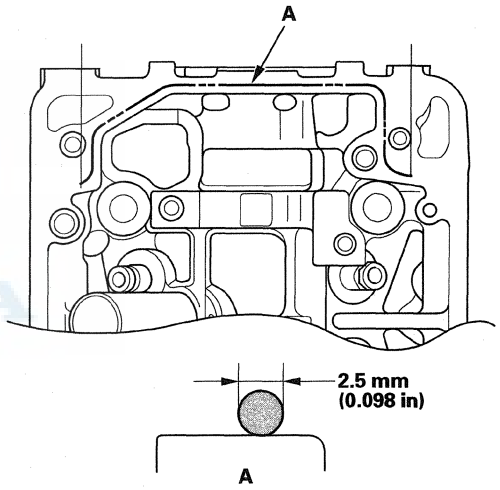

10. Set the rocker arm assembly in place, and loosely install the bolts. Make sure that the rocker arms are properly positioned on the valve stems.

    NOTE:
    - Wait at least 30 minutes before filling the engine with oil.
    - Do not run the engine for at least 3 hours after installing the rocker arm assembly.

(cont'd)

Camshaft, Rocker Arm Assembly, Camshaft Seal, and Pulley Installation (cont'd)

11. Tighten each bolt two turns at a time in the sequence shown to ensure that the rockers do not bind on the valves.

Specified Torque
8 x 1.25 mm: 22 N·m (2.2 kgf·m, 16 lbf·ft)

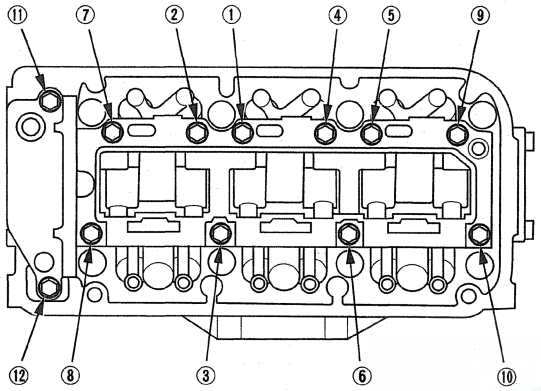

12. Install the injector base (A). Always use a new gasket (B).

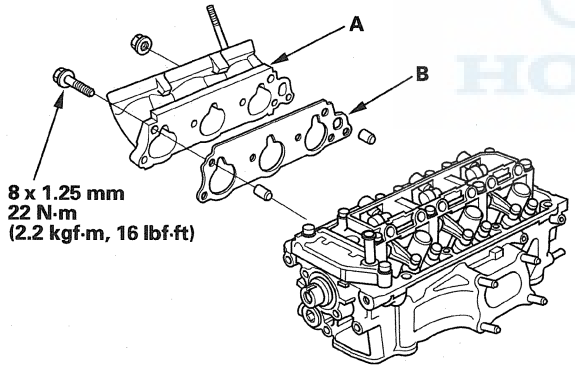

13. Apply new engine oil to the threads of the camshaft pulley mounting bolt (A). Install the back cover (B), then install the camshaft pulley (C).

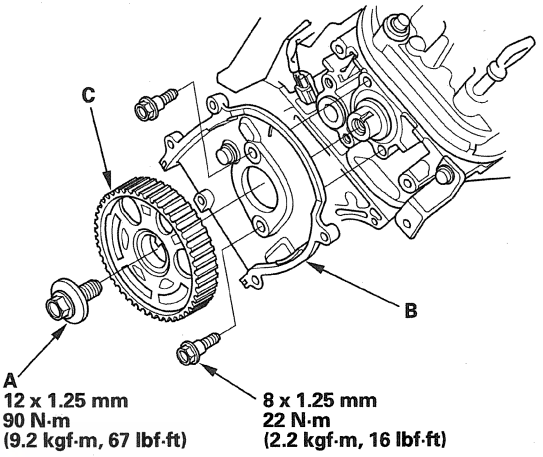

14. Set the camshaft pulleys to top dead center (TDC) before bolting them onto the engine block (see step 6 on page 6-59).

Rear

1. Loosen the valve adjusting screws.

2. Apply a light coat of new engine oil around the camshaft oil seal.

3. Gently tap the new camshaft oil seal (A) into the cylinder head.

   -1 Tap the camshaft oil seal in squarely.
   -2 Install the oil seal about 0.5 —1.5 mm (0.02—0.06 in) below the surface of the cylinder head.

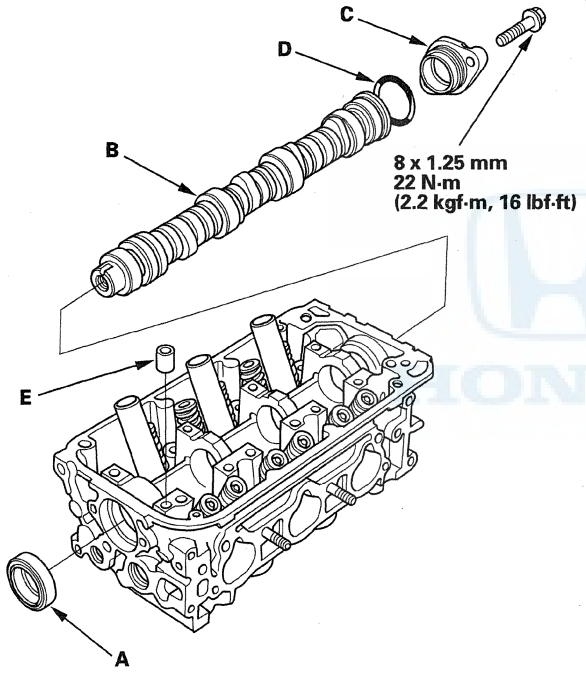

4. Insert the camshaft (B) into the cylinder head, then install the camshaft thrust cover (C). Always use a new O-ring (D). Apply new engine oil to the camshaft journals and lobes.

5. Check that the oil seal lips are not distorted.

6. Install the hollow dowel pin (E).

7. If the rocker arm assembly is disassembled, reassemble the rocker arm assembly (see page 6-42).

8. Remove all of the old liquid gasket from the rocker shaft holder and the cylinder head.

9. Apply liquid gasket (P/N 08717-0004, 08718-0001, 08718-0003, or 08718-0009) to the rocker shaft holder mating surface of the cylinder head. Install the component within 5 minutes of applying the liquid gasket.

   NOTE:
   - Apply liquid gasket about 2.5 mm (0.098 in) diameter bead along the broken line (A).
   - If you apply liquid gasket P/N 08718-0012, the component must be installed within 4 minutes.
   - If too much time has passed after applying the liquid gasket, remove the old liquid gasket and residue, then reapply new liquid gasket.

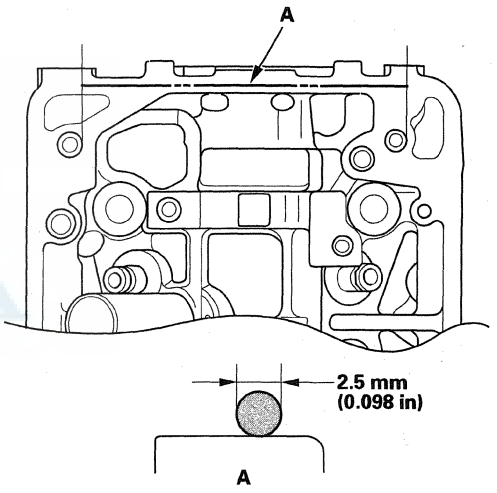

10. Set the rocker arm assembly in place, and loosely install the bolts. Make sure that the rocker arms are properly positioned on the valve stems.

    NOTE:
    - Wait at least 30 minutes before filling the engine with oil.
    - Do not run the engine for at least 3 hours after installing the rocker arm assembly.

(cont'd)

Camshaft, Rocker Arm Assembly, Camshaft Seal, and Pulley Installation (cont'd)

11. Tighten each bolt two turns at a time in the sequence shown to ensure that the rockers do not bind on the valves.

Specified Torque
8 x 1.25 mm: 22 N·m (2.2 kgf·m, 16 lbf·ft)

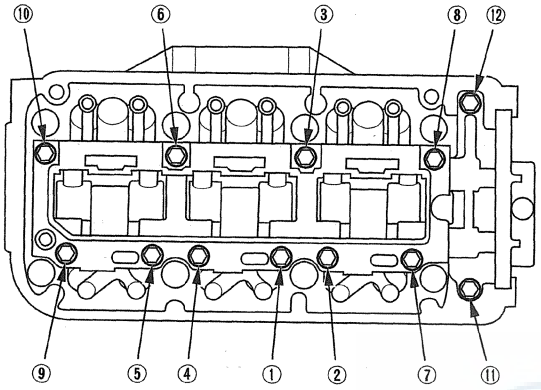

12. Install the injector base (A). Always use a new gasket (B).

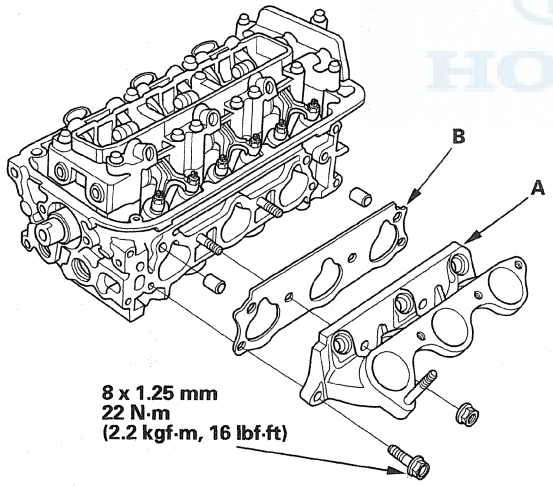

13. Apply new engine oil to the threads of the camshaft pulley mounting bolt (A). Install the back cover (B), then install the camshaft pulley (C).

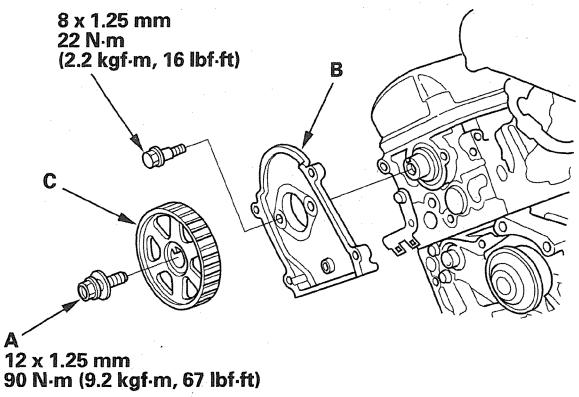

14. Set the camshaft pulleys to TDC before bolting them onto the engine block (see step 6 on page 6-59).

Cylinder Head Installation

1. Clean the cylinder head and the engine block surface.

2. Clean and install the oil control orifices (A) with new O-rings (B).

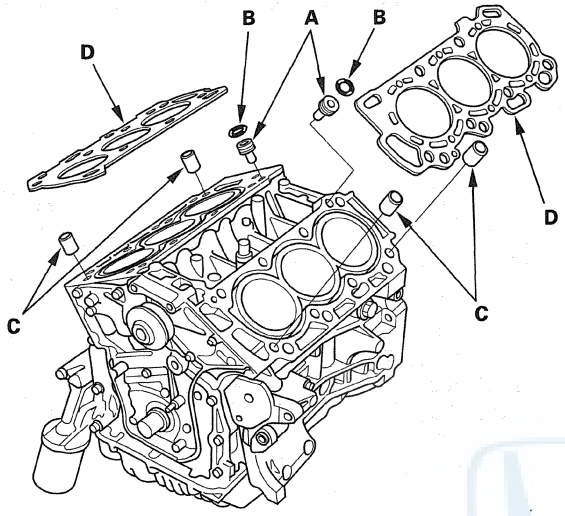

3. Install the dowel pins (C) and the new cylinder head gaskets (D).

4. Clean the timing belt pulleys, the timing belt guide plate, and the upper and lower covers.

5. Set the timing belt drive pulley to top dead center (TDC) by aligning the TDC mark (A) on the tooth of the timing belt drive pulley with the pointer (B) on the oil pump.

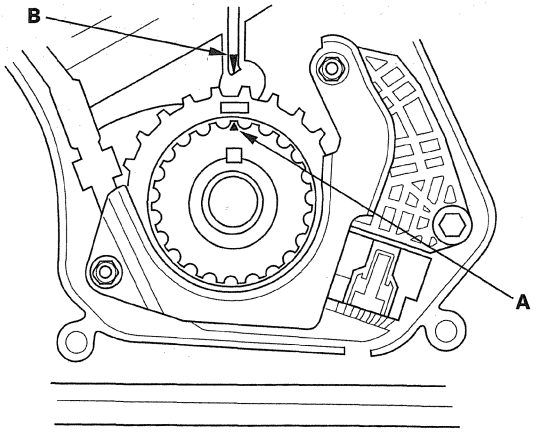

6. Set the camshaft pulleys to TDC by aligning the TDC marks (A) on the camshaft pulleys with the pointers (B) on the back covers.

FRONT

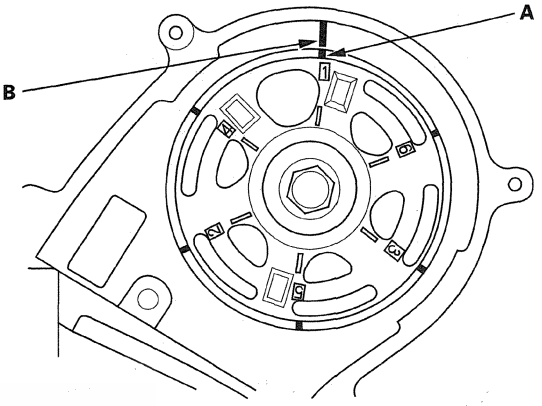

REAR

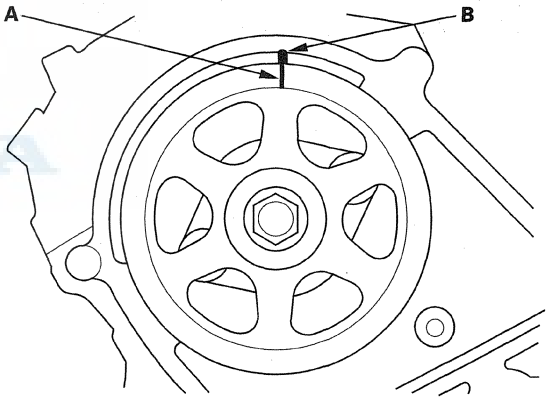

7. Install the cylinder heads on the engine block.

(cont'd)

Cylinder Head Installation (cont'd)

8. Measure the diameter of each cylinder head bolt at point A and point B.

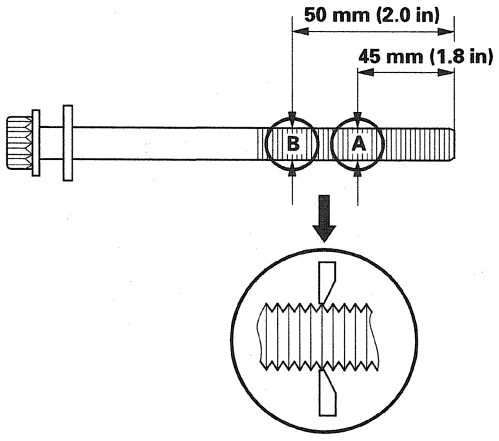

9. If either diameter is less than 10.6 mm (0.42 in), replace the cylinder head bolt.

10. Apply new engine oil to the threads and under the bolt heads of all cylinder head bolts.

11. Tighten the cylinder head bolts in sequence to 29 N·m (3.0 kgf·m, 22 lbf·ft) using a beam-type torque wrench. When using a preset-type torque wrench, be sure to torque slowly and do not overtighten. If a bolt makes any noise while you are torquing it, loosen the bolt and retighten it from the first step.

FRONT

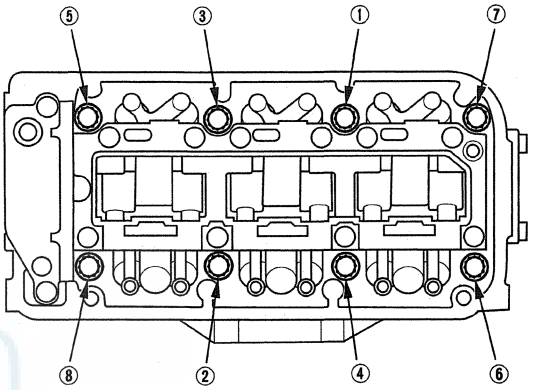

REAR

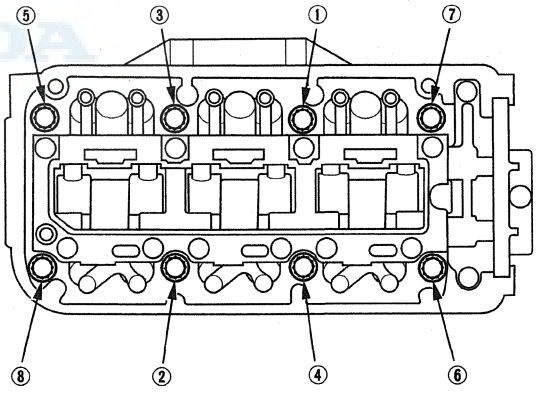

12. After torquing, tighten all cylinder head bolts in two steps (90 ° per step) using the sequence shown in step 11. If you are using a new cylinder head bolt, tighten the bolt an extra 90 °.

    NOTE: Remove the cylinder head bolt if you tightened it beyond the specified angle, and go back to step 8 of the procedure. Do not loosen it back to the specified angle.

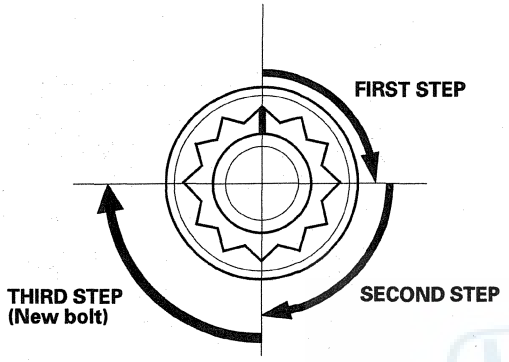

13. Install the timing belt (see page 6-18).
14. Adjust the valve clearance (see page 6-10).
15. Install the water passage (see page 10-9).
16. Install the fuel rails (see page 11-223).

17. Install the connector bracket to the front cylinder head.

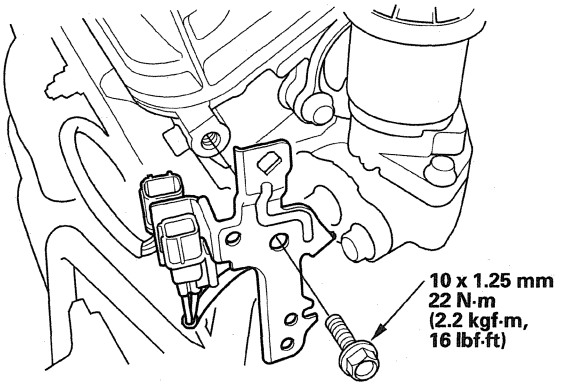

18. Install the engine mount control solenoid valve bracket and the harness clamp bracket from the rear cylinder head.

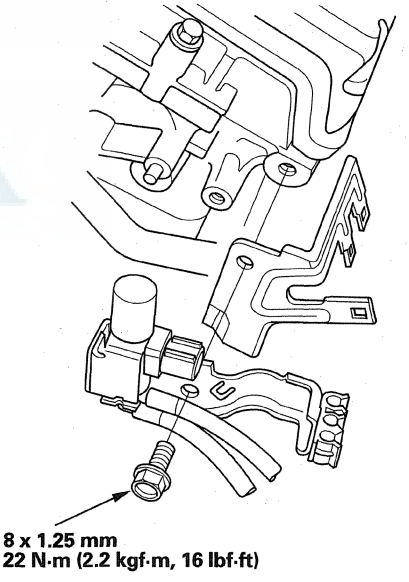

(cont'd)

Cylinder Head Installation (cont'd)

19. Connect the fuel feed hose (A) (see page 11-344), then install the quick-connect fitting cover (B).

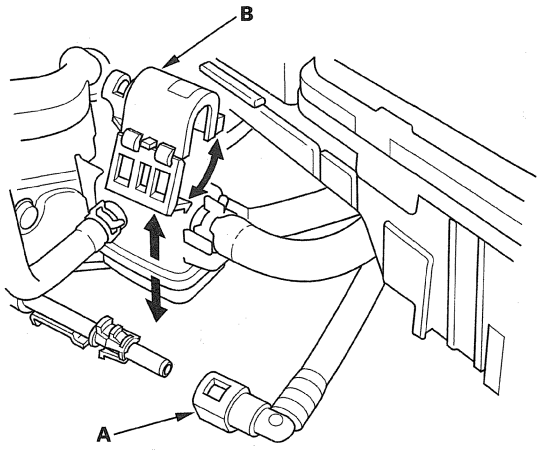

20. Install the front warm up three way catalytic converter (front WU-TWC) (see page 11-373) and the rear warm up three way catalytic converter (rear WU-TWC) (see page 11-374).

21. Connect the following engine wire harness connectors, and install the wire harness clamps to the cylinder head:

    - Six injector connectors
    - Engine coolant temperature (ECT) sensor 1 connector
    - Oil pressure switch connector
    - Camshaft position (CMP) sensor connector
    - Front and rear air fuel ratio (A/F) sensor connectors
    - Front and rear secondary heated oxygen sensor (secondary HO2S) connectors

22. Install the cylinder head covers (see page 6-30).

23. Install the six ignition coils (see page 4-21).

24. Install the intake manifold (see page 9-4).

25. Install the alternator (see page 4-37).

26. Install the power steering (P/S) pump (A) and tighten the bolt (B) securing the P/S hose bracket.

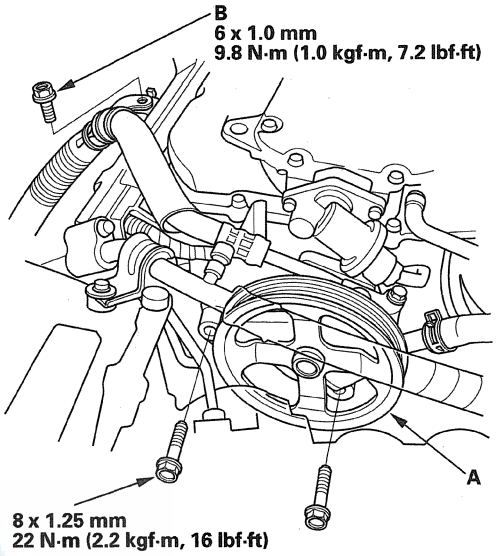

27. Install the drive belt (see page 4-33).

28. Do the battery terminal reconnection procedure (see page 22-91).

29. After installation, check that all tubes, hoses, and connectors are installed correctly.

30. Inspect for fuel leaks. Turn the ignition switch to ON (II) (do not operate the starter) so the fuel pump runs for about 2 seconds and pressurizes the fuel line. Repeat this operation three times, then check for fuel leakage at any point in the fuel line.

31. Refill the radiator with engine coolant, and bleed the air from the cooling system with the heater valve open (see step 8 on page 10-7).

32. Do the crankshaft position (CKP) pattern clear/CKP pattern learn procedure (see page 11-5).

33. Inspect the idle speed (see page 11-312).

34. Inspect the ignition timing (see page 4-20).

35. Check for fluid leaks.

Camshaft Oil Seal Installation - In Car

Special Tools Required
Ball joint remover/installer 07GAF-SD40330

1. Dry the camshaft oil seal housing.
2. Apply a light coat of multipurpose grease to the lip of the camshaft oil seal.
3. Using the ball joint remover/installer (A), a washer (B), and a 12 x 75 x 1.25 mm bolt (C), press in the camshaft oil seal (D) about 0.5—1.5 mm (0.02—0.06 in) below the surface of the cylinder head.

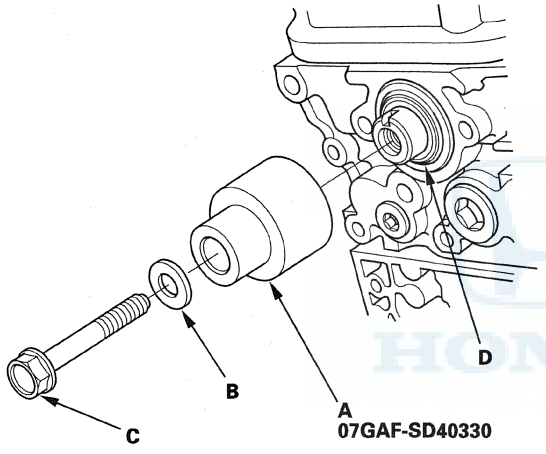

Sealing Bolt Installation

NOTE: When installing the sealing bolts (A), always use a new washer (B).

FRONT

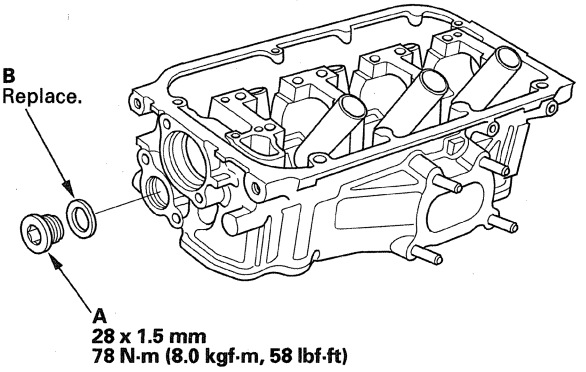

REAR

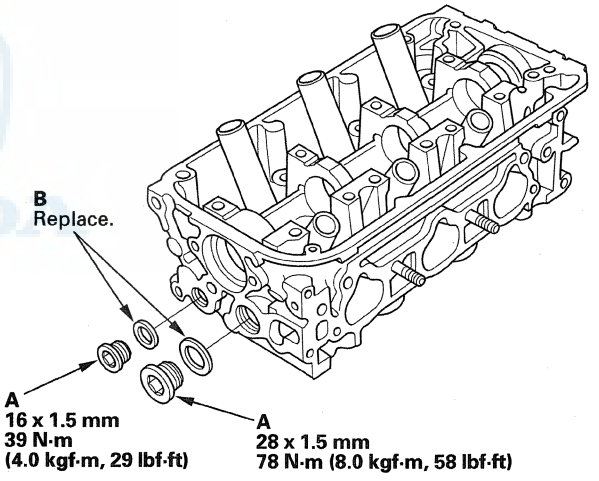

Engine Mechanical

Engine Block

Special Tools 7-2
Component Location Index 7-3
Connecting Rod and Crankshaft End Play Inspection 7-6
Crankshaft Main Bearing Replacement 7-7
Connecting Rod Bearing Replacement 7-9
Oil Pan Removal 7-11
Crankshaft and Piston Removal 7-12
Crankshaft Inspection 7-14
Block and Piston Inspection 7-15
Piston, Pin, and Connecting Rod Replacement 7-18
Piston Ring Replacement 7-21
Crankshaft and Piston Installation 7-23
Oil Pan Installation 7-29
Pulley End Crankshaft Oil Seal Installation - In Car ... 7-30
Transmission End Crankshaft Oil Seal Installation - In Car 7-31
Sealing Bolt Installation 7-31

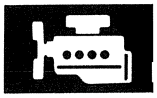

Engine Block

Special Tools

Ref. No.	Tool Number	Description	Qty
①	070AD-RCAA100	Oil Seal Driver, 64 mm	1
②	070AD-RCAA200	Driver Attachment, 106 mm	1
③	07749-0010000	Driver Handle, 15 x 135L	1

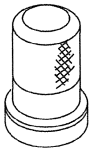

①

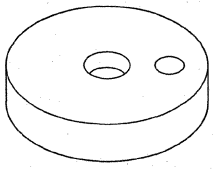

②

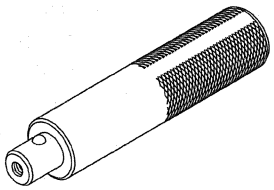

③

HONDA

Component Location Index

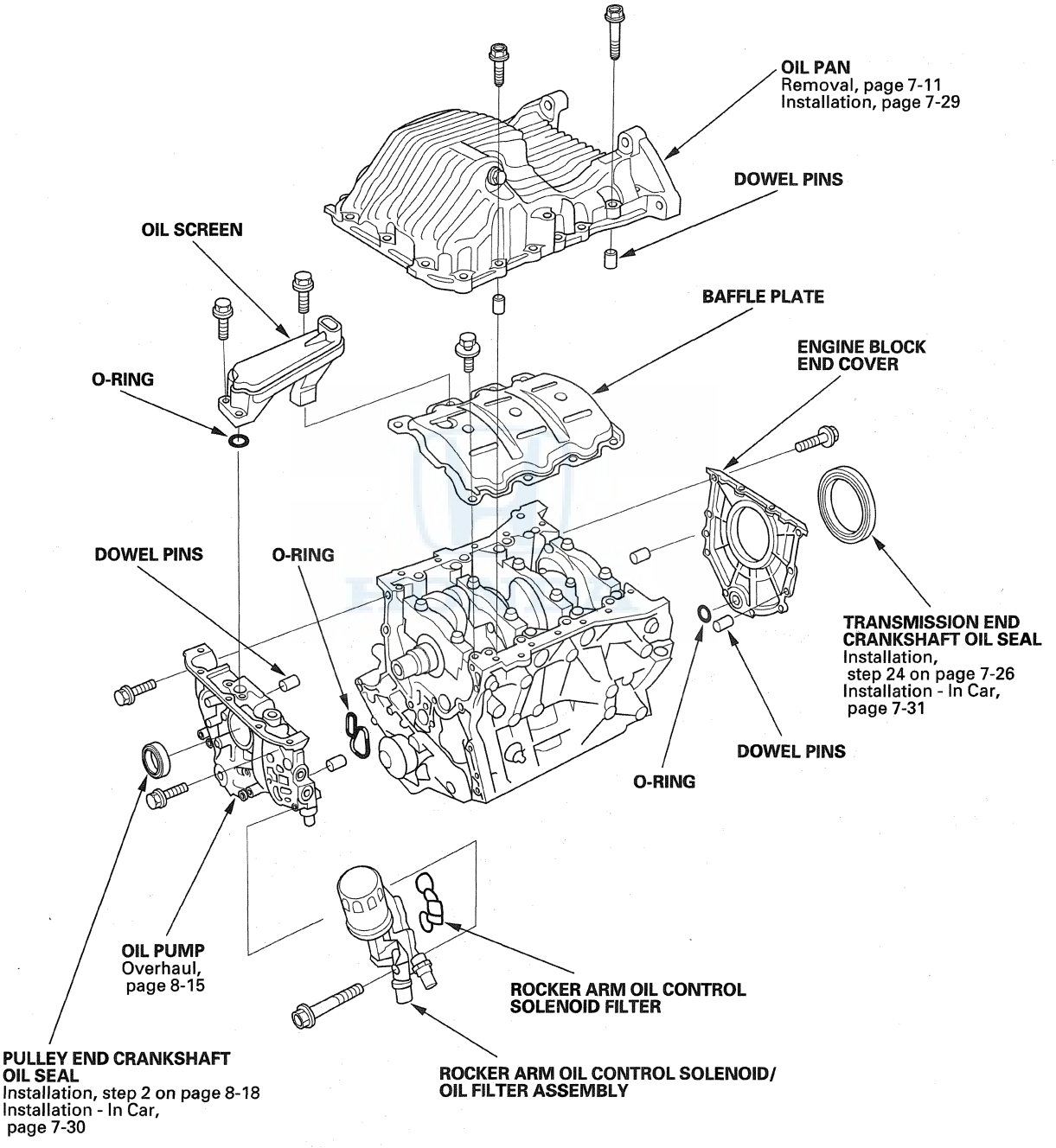

(cont'd)

Component Location Index (cont'd)

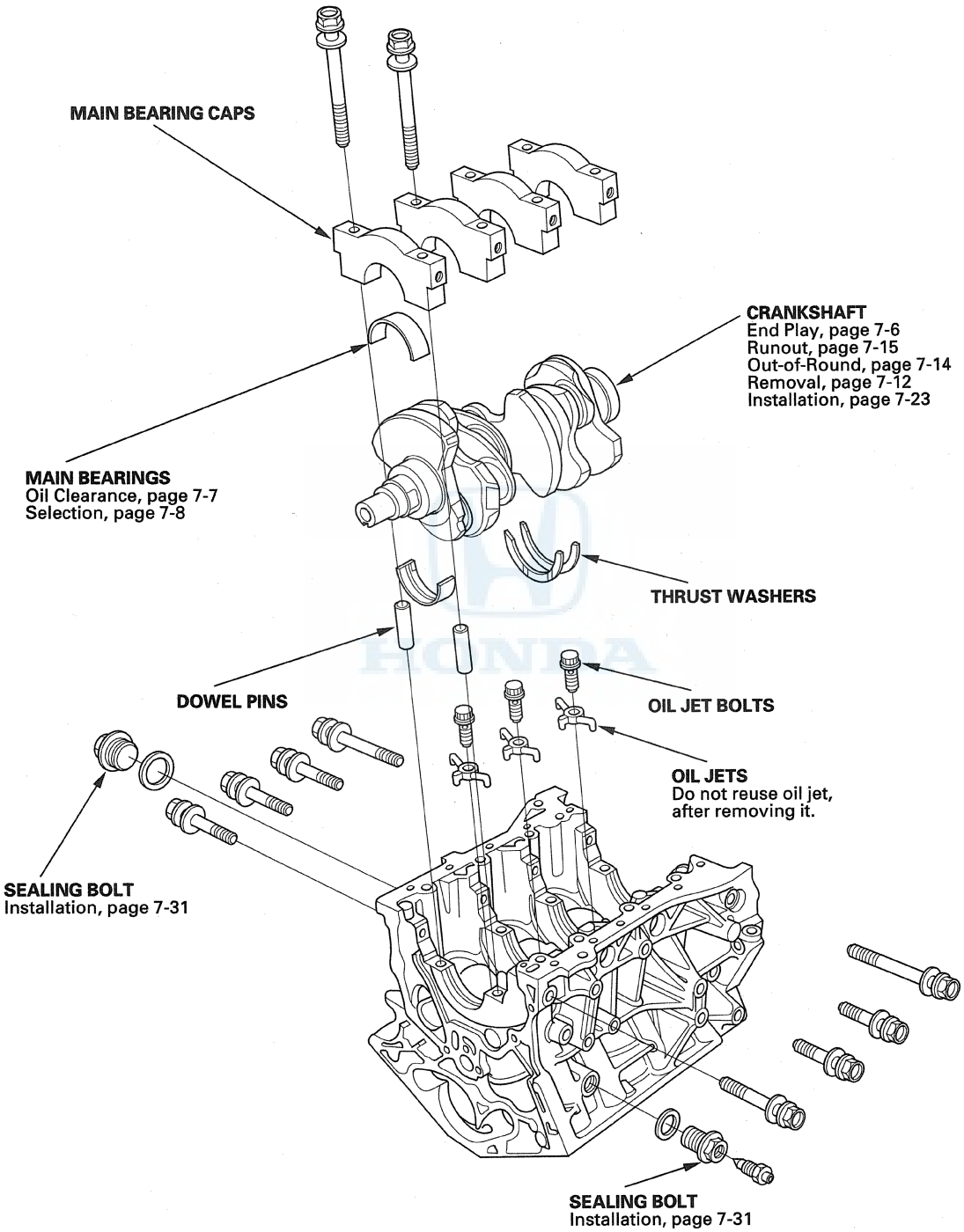

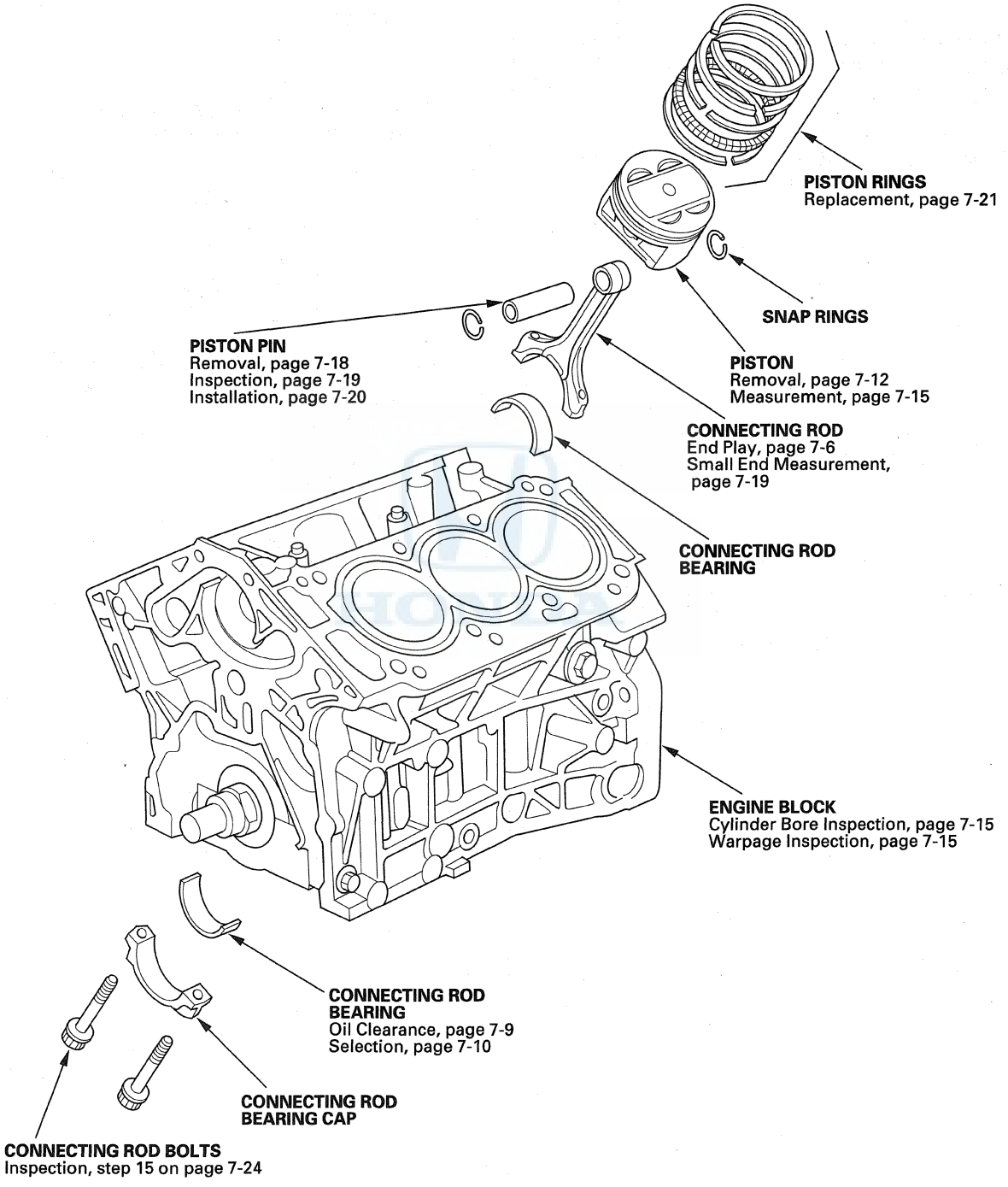
PISTON RINGS
Replacement, page 7-21
SNAP RINGS
PISTON
Removal, page 7-12
Measurement, page 7-15
PISTON PIN
Removal, page 7-18
Inspection, page 7-19
Installation, page 7-20
CONNECTING ROD
End Play, page 7-6
Small End Measurement, page 7-19
CONNECTING ROD BEARING
ENGINE BLOCK
Cylinder Bore Inspection, page 7-15
Warpage Inspection, page 7-15
CONNECTING ROD BEARING
Oil Clearance, page 7-9
Selection, page 7-10
CONNECTING ROD BEARING CAP
CONNECTING ROD BOLTS
Inspection, step 15 on page 7-24

Connecting Rod and Crankshaft End Play Inspection

1. Remove the oil pump (see page 8-16).

2. Remove the baffle plate (see step 10 on page 7-12).

3. Measure the connecting rod end play with a feeler gauge (A) between the connecting rod (B) and crankshaft (C).

   Connecting Rod End Play
   Standard (New): 0.15—0.35 mm (0.006—0.014 in)
   Service Limit: 0.45 mm (0.018 in)

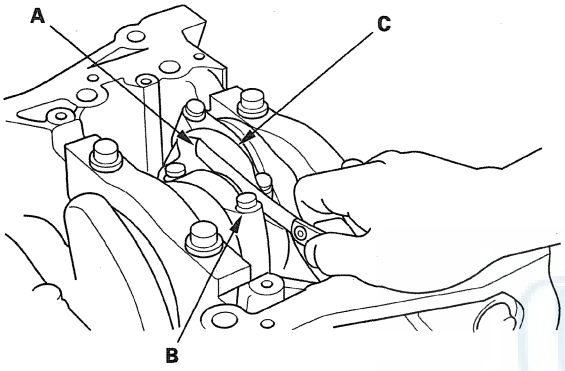

4. If the connecting rod end play is beyond the service limit, install a new connecting rod and recheck. If it is still beyond the service limit, replace the crankshaft (see page 7-12).

5. Push the crankshaft firmly away from the dial indicator, and zero the dial against the end of the crankshaft. Then pull the crankshaft firmly back toward the indicator; the dial reading should not exceed the service limit.

   Crankshaft End Play
   Standard (New): 0.10—0.35 mm (0.004—0.014 in)
   Service Limit: 0.45 mm (0.018 in)

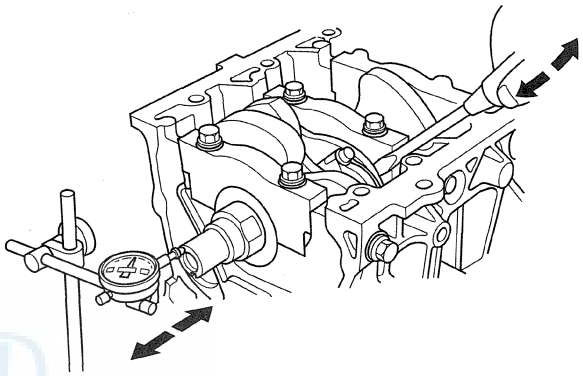

6. If the end play is excessive, replace the thrust washers and recheck. If it is still beyond the service limit, replace the crankshaft (see page 7-12).

Crankshaft Main Bearing Replacement

Main Bearing Clearance Inspection

1. Remove the main bearing caps and bearing halves (see page 7-12).

2. Clean each main journal and bearing half with a clean shop towel.

3. Place one strip of plastigage across each main journal.

   NOTE: If the engine is still in the vehicle when you bolt the main cap down to check the clearance, the weight of the crankshaft and drive plate will flatten the plastigage further than just the torque on the cap bolt and give you an incorrect reading. For an accurate reading, support the crank with a jack under the counterweights, and check only one bearing at a time.

4. Reinstall the bearings and the caps, then torque the bearing cap bolts to 74 N·m (7.5 kgf·m, 54 lbf·ft), and the bearing cap side bolts to 49 N·m (5.0 kgf·m, 36 lbf·ft) in the proper sequence (see step 22 on page 7-25).

   NOTE:
   - Apply new engine oil to the bolt threads and flanges.
   - Do not rotate the crankshaft during inspection.

5. Remove the cap and bearing half, and measure the widest part of the plastigage.

   Main Bearing-to-Journal Oil Clearance
   Standard (New): 0.019—0.045 mm (0.0007—0.0018 in)
   Service Limit: 0.050 mm (0.0020 in)

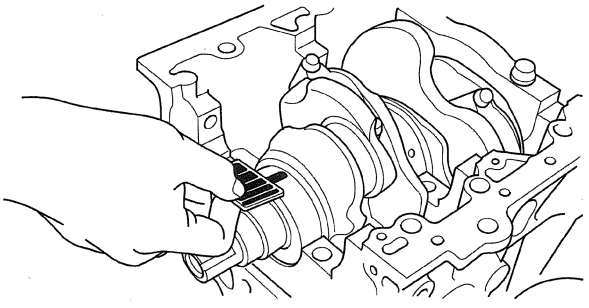

6. If the plastigage measures too wide or too narrow, remove the crankshaft, and remove the upper half of the bearing. Install a new, complete bearing with the same color code, and recheck the clearance. Do not file, shim, or scrape the bearings or the caps to adjust clearance.

7. If the plastigage shows the clearance is still incorrect, try the next larger or smaller bearing (the color listed above or below the current one), and check again. If the proper clearance cannot be obtained by using the appropriate larger or smaller bearings, replace the crankshaft and start over (see page 7-12).

(cont'd)

Crankshaft Main Bearing Replacement (cont'd)

Main Bearing Selection

Crankshaft Bore Code Location

Letters or bars have been stamped on the end of the engine block as a code for the size of each of the four main journal bores.

Use them, and the numbers stamped on the crankshaft (codes for main journal size), to choose the correct bearings. If the codes are indecipherable because of an accumulation of dirt and dust, do not scrub them with a wire brush or scraper. Clean them only with solvent or detergent.

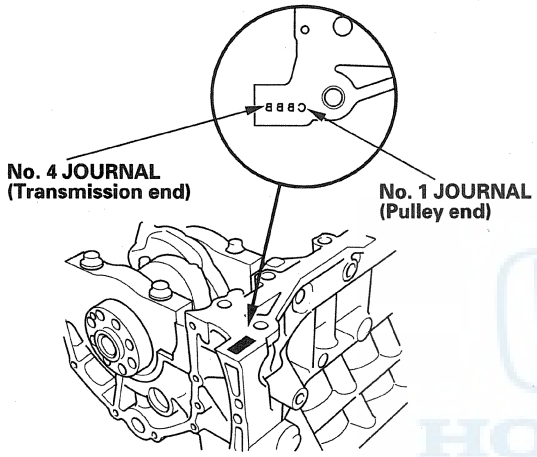

Bearing Identification

Color code is on the edge of the bearing

	Larger crank bore →			
	A or I	B or II	C or III	D or IIII
Smaller bearing (Thicker) ↓				
1 or I	Red/ Pink	Pink	Pink/ Yellow	Yellow
2 or II	Pink	Pink/ Yellow	Yellow	Yellow/ Green
3 or III	Pink/ Yellow	Yellow	Yellow/ Green	Green
4 or IIII	Yellow	Yellow/ Green	Green	Green/ Brown
5 or IIIII	Yellow/ Green	Green	Green/ Brown	Brown
6 or IIIIII	Green	Green/ Brown	Brown	Brown/ Black

Smaller main journal

Smaller bearing (Thicker)

NOTE: When using bearing halves of different colors, it does not matter which color is used in the top or bottom.

Main Journal Code Locations (Numbers or Bars)

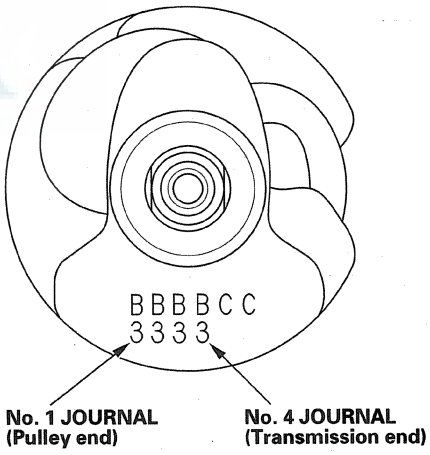

Connecting Rod Bearing Replacement

Rod Bearing Clearance Inspection

1. Remove the connecting rod cap and the bearing half (see page 7-12).

2. Clean the crankshaft rod journal and the bearing half with a clean shop towel.

3. Place a strip of plastigage across the rod journal.

4. Reinstall the bearing half and the cap, and torque the bolts.

   NOTE:
   - Apply new engine oil to the bolt threads and flanges.
   - Do not rotate the crankshaft during inspection.

   Tightening Torque:
   20 N·m (2.0 kgf·m, 14 lbf·ft) + 90 °

5. Remove the rod cap and the bearing half and measure the widest part of the plastigage.

   Connecting Rod Bearing-to-Journal Oil Clearance
   Standard (New): 0.020—0.044 mm
   (0.0008—0.0017 in)
   Service Limit: 0.050 mm (0.0020 in)

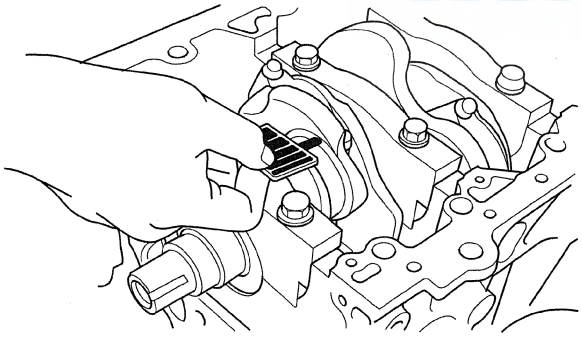

6. If the plastigage measures too wide or too narrow, remove the upper half of the bearing, then install a new, complete bearing with the same color code, and recheck the clearance. Do not file, shim, or scrape the bearings or the caps to adjust clearance.

7. If the plastigage shows the clearance is still incorrect, try the next larger or smaller bearing (the color listed above or below the current one), and check clearance again. If the proper clearance cannot be obtained by using the appropriate larger or smaller bearings, replace the crankshaft and start over (see page 7-12).

(cont'd)

Connecting Rod Bearing Replacement (cont'd)

Rod Bearing Selection

Each rod falls into one of four tolerance ranges, from 0 to 0.024 mm (0.0009 in), in 0.006 mm (0.0002 in) increments, depending on the size of its big end bore. It's then stamped with a number or bar (1, 2, 3, or 4/I, II, III, or IIII) indicating the range. You may find any combination of 1, 2, 3, or 4/I, II, III, or IIII in any engine.

Normal Bore Size: 60.0 mm (2.36 in)

Inspect the connecting rod for cracks and heat damage.

Connecting Rod Journal Code Locations
Numbers or bars have been stamped on the side of each connecting rod as a code for the size of the big end. Use them, and the letters or bars stamped on the crank (codes for rod journal size) to choose the correct bearings. If the codes are indecipherable because of an accumulation of dirt and dust, do not scrub them with a wire brush or scraper. Clean them only with solvent or detergent.

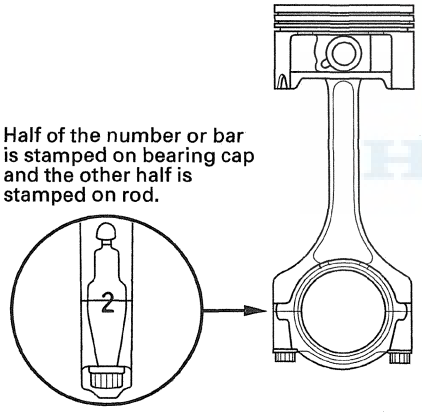

Bearing Identification

Color code is on the edge of the bearing

	Larger big end bore →			
	1 or I	2 or II	3 or III	4 or IIII
Smaller bearing (Thicker) ↓				
A or I	Pink	Pink/ Yellow	Yellow	Yellow/ Green
B or II	Pink/ Yellow	Yellow	Yellow/ Green	Green
C or III	Yellow	Yellow/ Green	Green	Green/ Brown
D or IIII	Yellow/ Green	Green	Green/ Brown	Brown
E or IIIII	Green	Green/ Brown	Brown	Brown/ Black
F or IIIIII	Green/ Brown	Brown	Brown/ Black	Black

Smaller rod journal — **Smaller bearing (Thicker)**

NOTE: When using bearing halves of different colors, it does not matter which color is used in the top or bottom.

Connecting Rod Journal Code Locations (Letters or Bars)

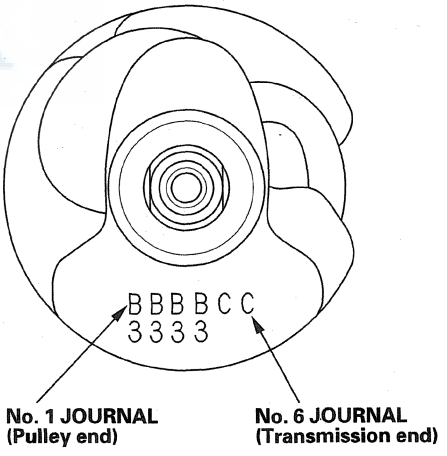

Oil Pan Removal

1. If the engine is out of the vehicle, go to step 6.
2. Raise the vehicle on the lift to full height.
3. Drain the engine oil (see page 8-11).
4. Remove the splash shield (see step 31 on page 5-7).
5. Remove exhaust pipe A.

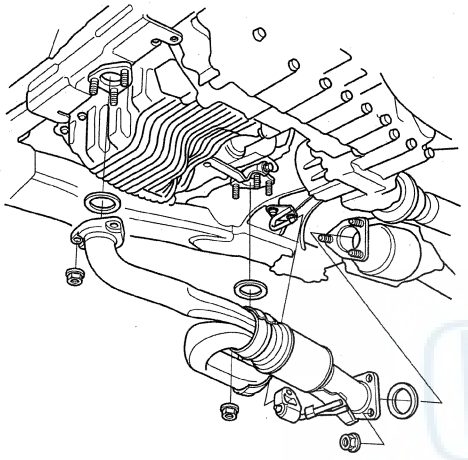

6. Remove the rear warm up three way catalytic converter (rear WU-TWC) bracket.

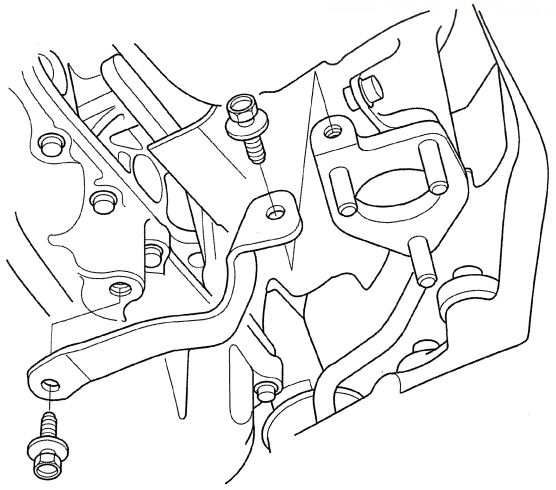

7. Remove the torque converter cover (A) and the four bolts (B) securing the transmission.

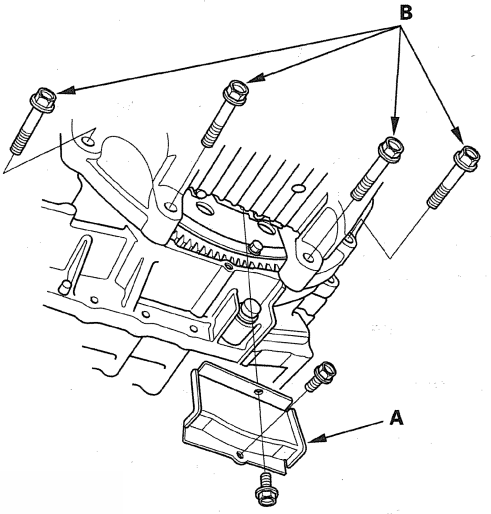

8. Remove the bolts securing the oil pan.
9. Using a flat blade screwdriver, separate the oil pan from the block in the places shown.

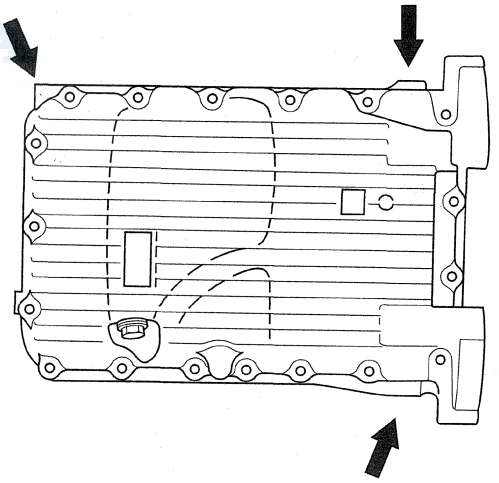

10. Remove the oil pan.

Crankshaft and Piston Removal

1. Remove the engine assembly (see page 5-3).
2. Remove the transmission (see page 14-201).
3. Remove the drive plate.
4. Remove the cylinder heads (see page 6-34).
5. Remove the crankshaft position (CKP) sensor (see page 11-229).
6. Remove the timing belt drive pulley from the crankshaft.
7. Remove the oil pan (see page 7-11).
8. Remove the engine block end cover.

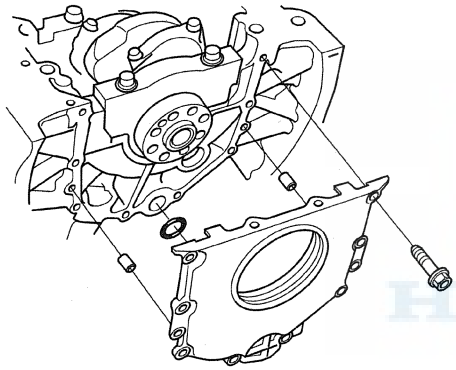

9. Remove the rocker arm oil control solenoid/oil filter assembly.

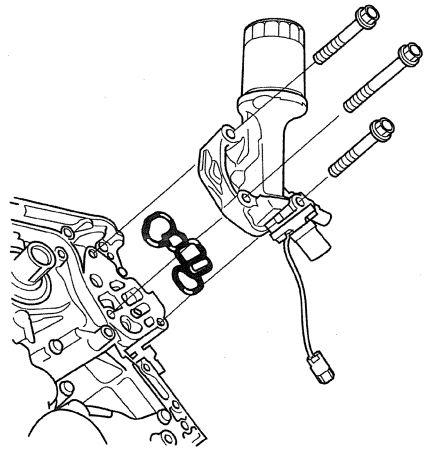

10. Remove the oil screen (A), baffle plate (B), and oil pump (C).

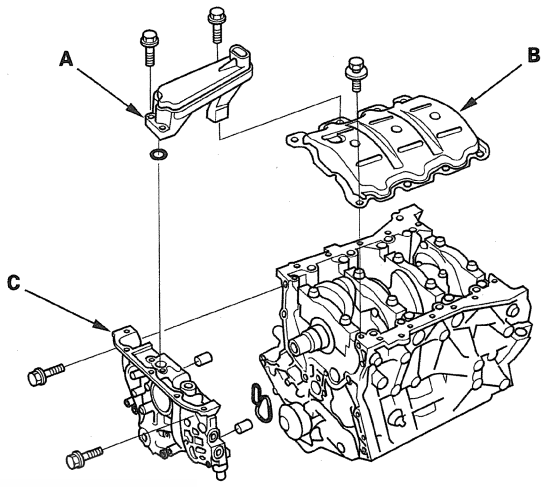

11. Remove the connecting rod caps after setting the crank pin at bottom dead center (BDC) for each cylinder. Remove the piston/connecting rod assembly by pushing on the connecting rod. Take care not to damage the oil jets, crank pin, or cylinder with the connecting rod.

CORRECT

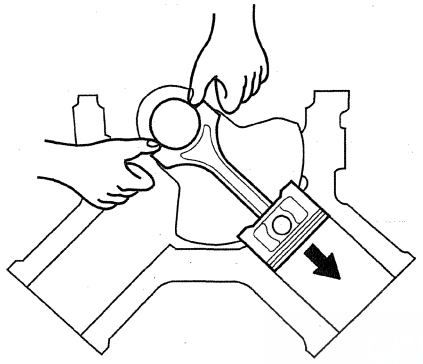

INCORRECT

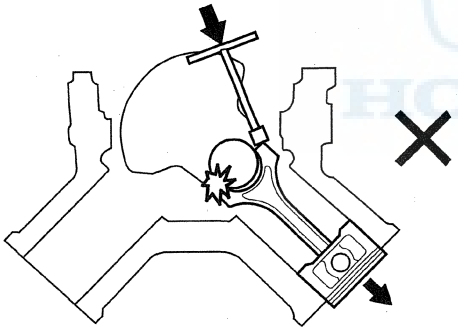

12. Remove the bearing from the cap. Keep all caps/bearings in order.

13. Remove the upper bearing halves from the connecting rods, and set them aside with their respective caps.

14. After removing a piston/connecting rod assembly, reinstall the cap on the rod.

15. To avoid mix-up during reassembly, mark each piston/connecting rod assembly with its cylinder number.

16. Loosen the bearing cap bolts and the bearing cap side bolts in sequence 1/3 turn at a time; repeat the sequence until all bolts are loosened.

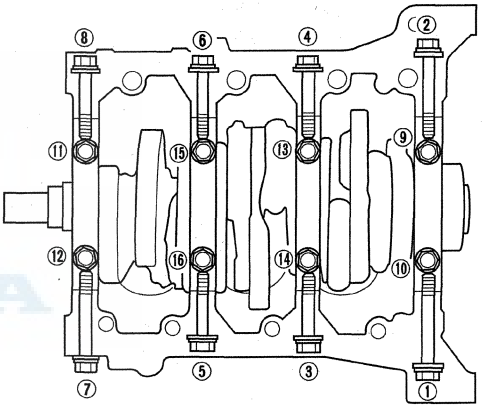

(cont'd)

Crankshaft and Piston Removal (cont'd)

17. Remove the bearing cap bolts (A) and the bearing cap side bolts (B), then remove the bearing cap (C).

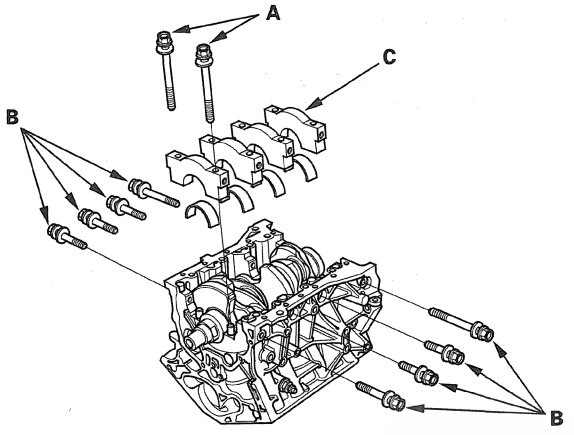

18. Lift the crankshaft (A) out of the engine block, being careful not to damage the journals.

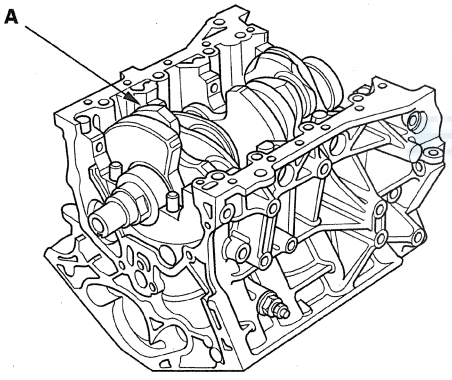

19. Reinstall the main caps and the bearings on the engine block in the proper order.

Crankshaft Inspection

Out-of-Round and Taper

1. Remove the crankshaft from the engine block (see page 7-12).

2. Clean the crankshaft oil passages with pipe cleaners or a suitable brush.

3. Check the keyway slot and the threaded holes for damage.

4. Measure out-of-round at the middle of each rod and main journal in two places. The difference between measurements on each journal must not be more than the service limit.

Journal Out-of-Round
Standard (New): 0.005 mm (0.0002 in) max.
Service Limit: 0.010 mm (0.0004 in)

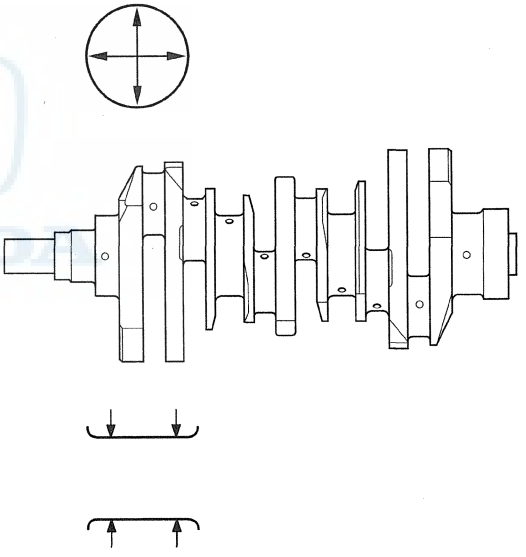

5. Measure the taper at the edges of each rod and main journal. The difference between measurements on each journal must not be more than the service limit.

Journal Taper
Standard (New): 0.005 mm (0.0002 in) max.
Service Limit: 0.010 mm (0.0004 in)

Straightness

6. Place the engine block on the surface plate.
7. Clean and install the bearings on the No. 1 and No. 4 journal of the engine block.
8. Lower the crankshaft into the engine block.
9. Measure the runout on all of the main journals. Rotate the crankshaft two complete revolutions. The difference between measurements on each journal must not be more than the service limit.

Crankshaft Total Runout
Standard (New): 0.025 mm (0.0010 in) max.
Service Limit: 0.030 mm (0.0012 in)

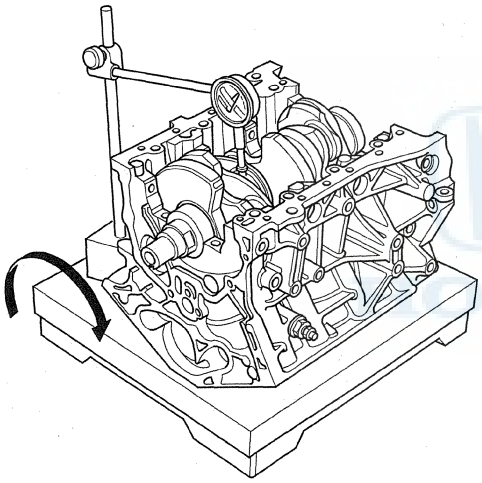

Block and Piston Inspection

1. Remove the piston from the engine block (see page 7-12).
2. Check the piston for distortion or cracks.
3. Measure the piston diameter at a point 16.0 mm (0.63 in) from the bottom of the skirt.

Piston Diameter
Standard (New): 89.983—89.996 mm (3.5426—3.5431 in)
Service Limit: 89.975 mm (3.5423 in)

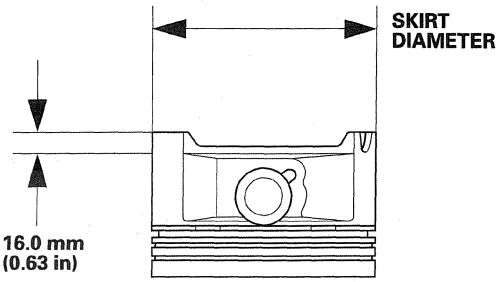

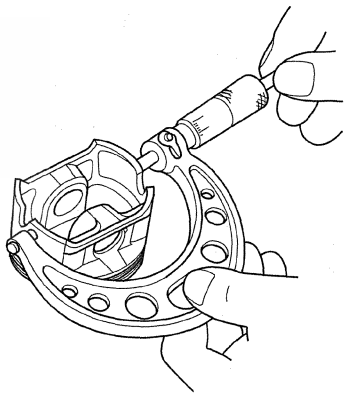

(cont'd)

Block and Piston Inspection (cont'd)

4. Measure wear and taper in direction X and Y at three levels in each cylinder as shown. If measurements in any cylinder are beyond the standard limit, replace the engine block.

Cylinder Bore Size
Standard (New): 90.000—90.015 mm (3.5433—3.5439 in)
Service Limit: 90.065 mm (3.5459 in)

Bore Taper
Limit: (Difference between first and third measurement) 0.05 mm (0.002 in)

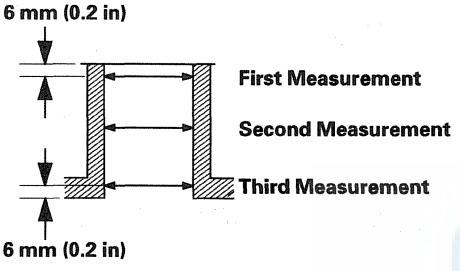

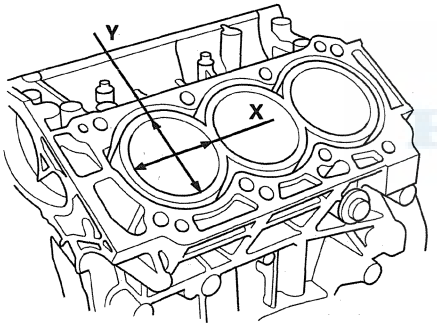

5. Check the top of the engine block for warpage. Measure along the edges and across the center as shown.

Engine Block Warpage
Standard (New): 0.07 mm (0.003 in) max.

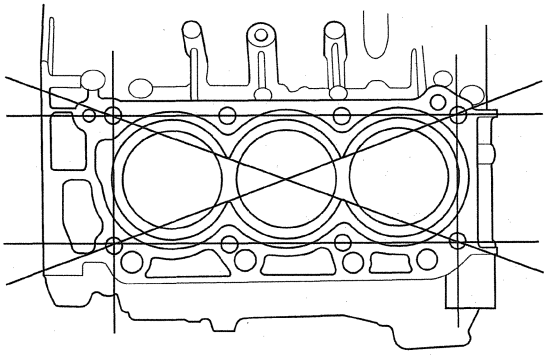

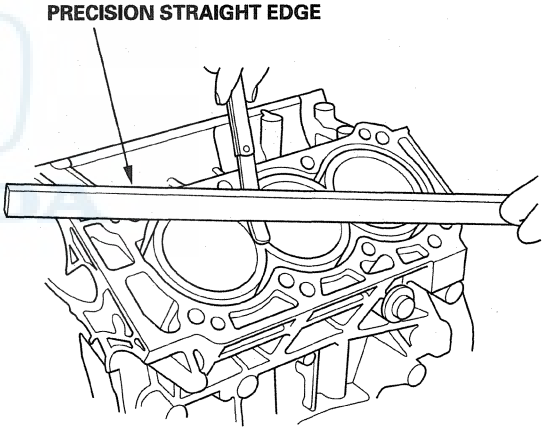

6. Calculate the difference between cylinder bore diameter and piston diameter. If the clearance is near or exceeds the service limit, inspect the piston and cylinder bore for excessive wear.

Piston-to-Cylinder Bore Clearance
Standard (New): 0.004—0.032 mm (0.0002—0.0013 in)
Service Limit: 0.070 mm (0.0027 in)

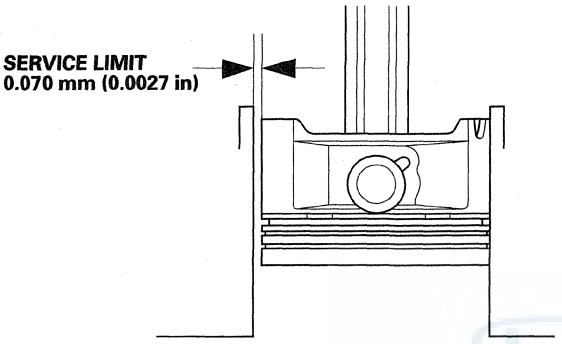

HONDA

Piston, Pin, and Connecting Rod Replacement

Disassembly

1. Remove the piston from the engine block (see page 7-12).

2. Apply new engine oil to the piston pin snap rings (A) and turn them in the ring grooves until the end gaps are lined up with the cutouts in the piston pin bores (B).

   NOTE: Take care not to damage the ring grooves.

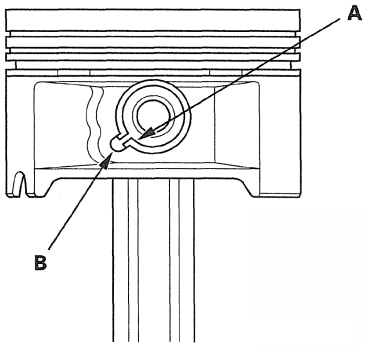

3. Remove snap rings (A) from both sides of the piston. Start at the cutout in the piston pin bore. Remove the snap rings carefully so they do not go flying or get lost. Wear eye protection.

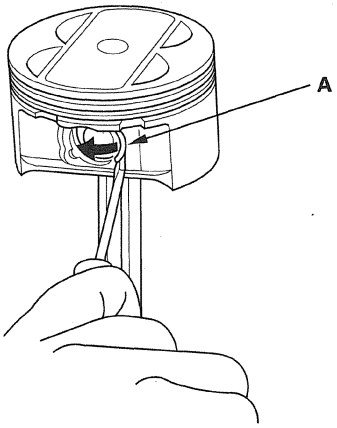

4. Heat the piston and connecting rod assembly to about 158 °F (70 °C), then remove the piston pin.

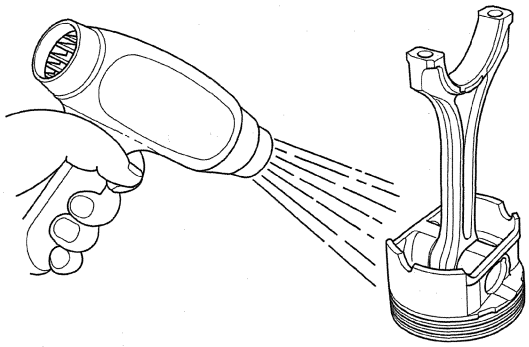

Inspection

NOTE: Inspect the piston, the piston pin, and the connecting rod when they are at room temperature.

1. Measure the diameter of the piston pin.

Piston Pin Diameter
Standard (New): 21.961—21.965 mm (0.8646—0.8648 in)
Service Limit: 21.954 mm (0.8643 in)

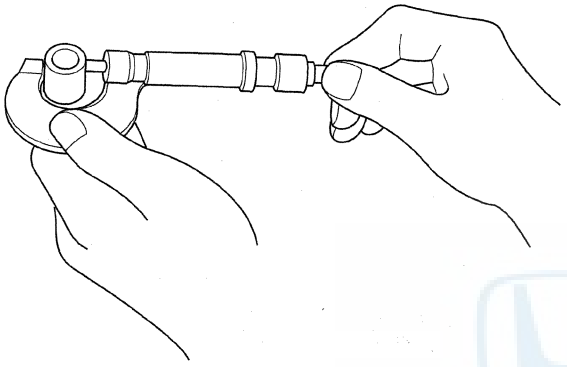

2. Zero the dial indicator to the piston pin diameter.

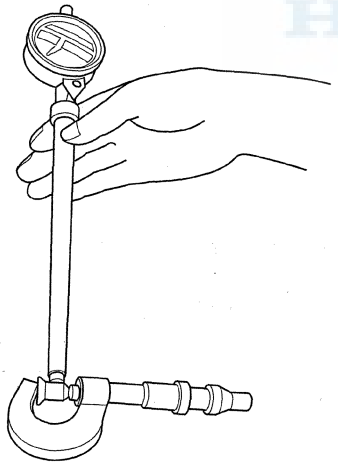

3. Check the difference between the piston pin diameter and piston pin hole diameter on the piston.

Piston Pin-to-Piston Clearance
Standard (New): −0.005 to +0.002 mm (−0.0002 to +0.00008 in)
Service Limit: 0.004 mm (0.0002 in)

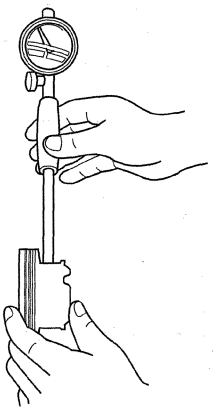

4. Measure the piston pin-to-connecting rod clearance.

Piston Pin-to-Connecting Rod Clearance
Standard (New): 0.005—0.015 mm (0.0002—0.0006 in)
Service Limit: 0.019 mm (0.0007 in)

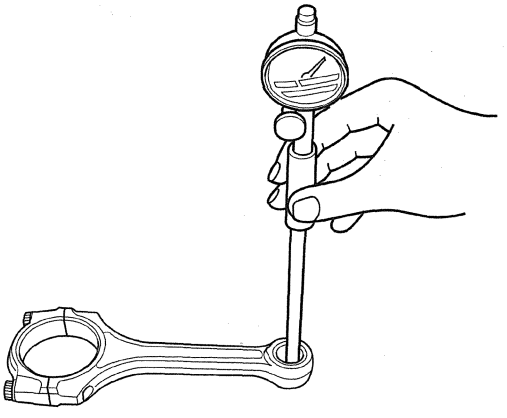

(cont'd)

Piston, Pin, and Connecting Rod Replacement (cont'd)

Reassembly

1. Install a piston pin snap ring (A) only on one side.

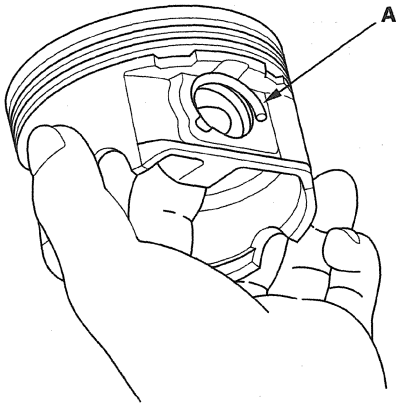

2. Coat the piston pin bore in the piston, the bore in the connecting rod, and the piston pin with new engine oil.

3. Heat the piston to about 158 °F (70 °C).

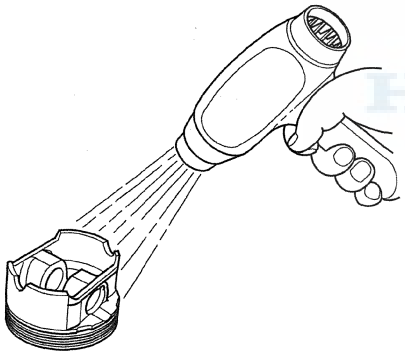

4. Assemble the piston (A) and connecting rod (B) with the embossed marks (C) on the same side. Install the piston pin (D).

NOTE: Apply new engine oil to the piston pin.

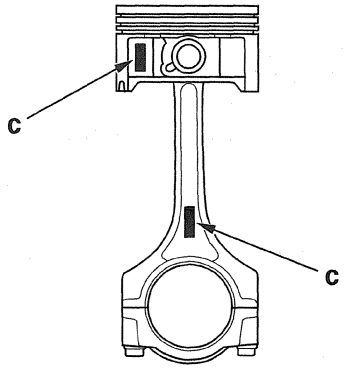

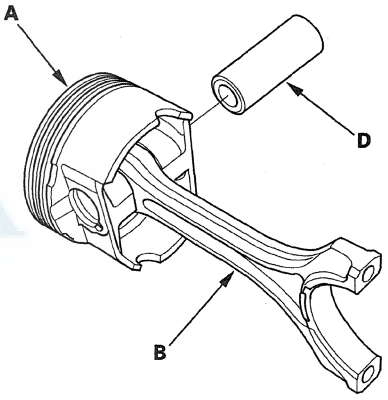

5. Install the remaining snap ring.

6. Reassemble the other pistons the same way.

Piston Ring Replacement

1. Remove the piston from the engine block (see page 7-12).

2. Using a ring expander (A), remove the old piston rings (B).

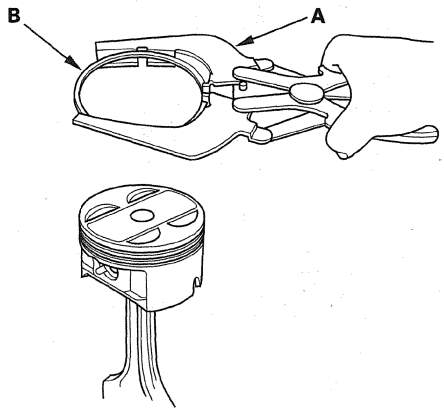

3. Clean all the ring grooves thoroughly with a squared-off broken ring, or a ring groove cleaner with a blade that fits the piston grooves. File down the blade, if necessary. The top ring and second ring grooves are 1.2 mm (0.05 in) wide, and the oil ring groove is 2.8 mm (0.11 in) wide. Do not use a wire brush to clean the ring grooves, or cut the ring grooves deeper with the cleaning tool.

   NOTE: If the piston is to be separated from the connecting rod, do not install new rings yet.

4. Using a piston, push a new ring (A) into the cylinder bore 15—20 mm (0.6—0.8 in) from the bottom.

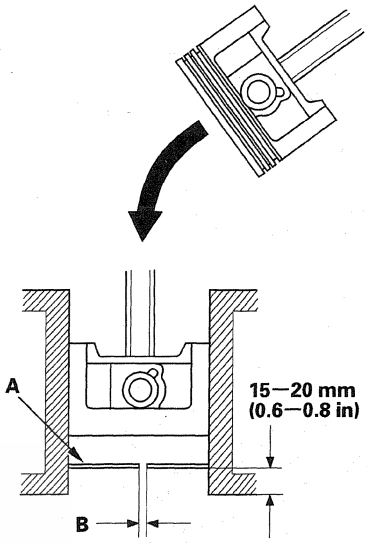

5. Measure the piston ring end-gap (B) with a feeler gauge:

   - If the gap is too small, check to see if you have the proper rings for your engine.
   - If the gap is too large, recheck the cylinder bore diameter against the wear limits (see step 4 on page 7-16).

Piston Ring End-Gap

Top Ring:
Standard (New): 0.30—0.40 mm (0.012—0.016 in)
Service Limit: 0.60 mm (0.024 in)

Second Ring:
Standard (New): 0.40—0.55 mm (0.016—0.022 in)
Service Limit: 0.70 mm (0.028 in)

Oil Ring:
Standard (New): 0.20—0.70 mm (0.008—0.028 in)
Service Limit: 0.80 mm (0.031 in)

(cont'd)

Piston Ring Replacement (cont'd)

6. Install the rings as shown. The top ring (A) has a 1E mark and the second ring (B) has a 2E mark. The manufacturing marks (C) must face upward.

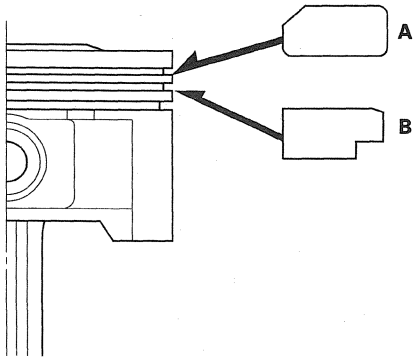

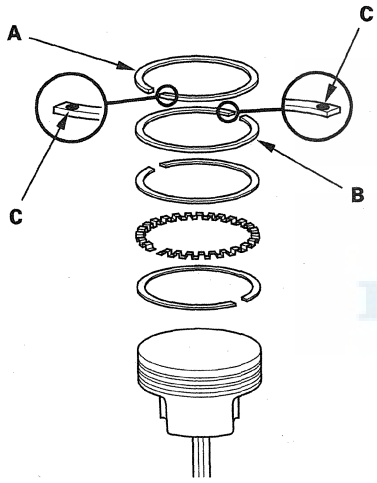

Piston Ring Dimensions:

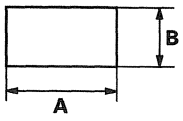

Top Ring (Standard)
A: 3.1 mm (0.12 in)
B: 1.2 mm (0.05 in)

Second Ring (Standard)
A: 3.4 mm (0.13 in)
B: 1.2 mm (0.05 in)

7. After installing a new set of rings, measure the ring-to-groove clearance:

Top Ring Clearance
Standard (New): 0.055—0.085 mm (0.0022—0.0033 in)
Service Limit: 0.15 mm (0.006 in)

Second Ring Clearance
Standard (New): 0.030—0.060 mm (0.0012—0.0024 in)
Service Limit: 0.13 mm (0.005 in)

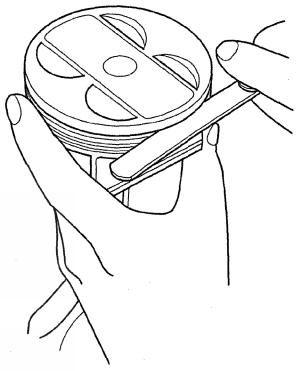

8. Rotate the rings in their grooves to make sure they do not bind.

9. Position the ring end gaps as shown:

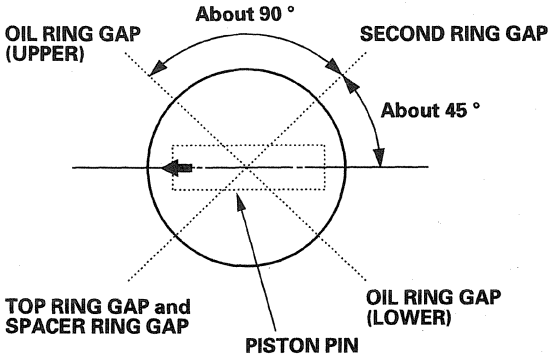

Crankshaft and Piston Installation

Special Tools Required
- Driver handle, 15 x 135L 07749-0010000
- Driver attachment, 106 mm 070AD-RCAA200

1. Check the connecting rod bearing clearance with plastigage (see page 7-9).
2. Check the main bearing clearance with plastigage (see page 7-7).
3. Install the bearing halves in the engine block and the connecting rods.
4. Apply new engine oil to the inside of the main bearings and rod bearings.
5. Lower the crankshaft (A) into the engine block.

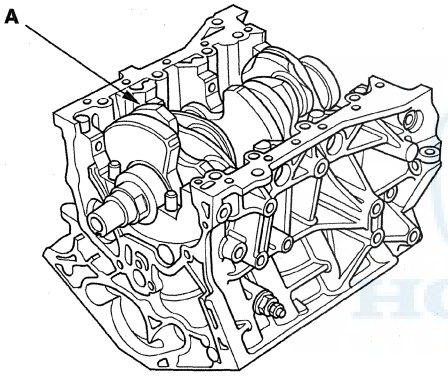

6. Apply new engine oil to the side with the thrust washer groove. Install the thrust washers (A) in the No. 3 journal.

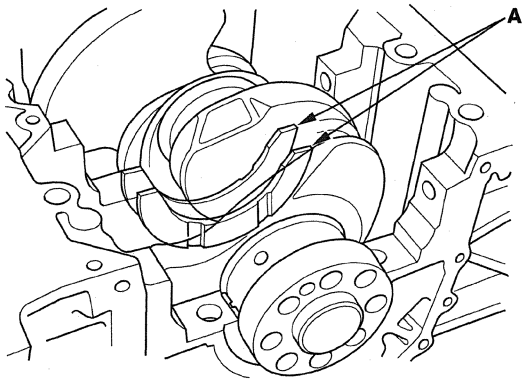

7. Install the bearings (A) and the bearing caps (B) with the arrow (C) facing the timing belt end of the engine.

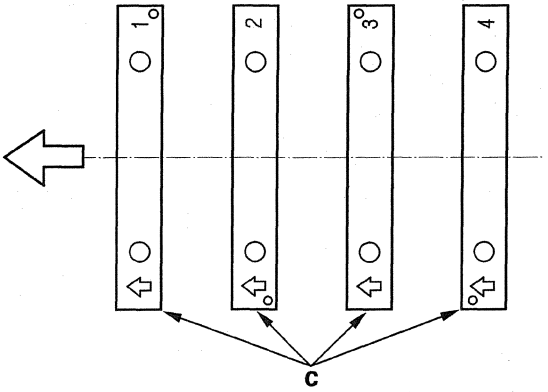

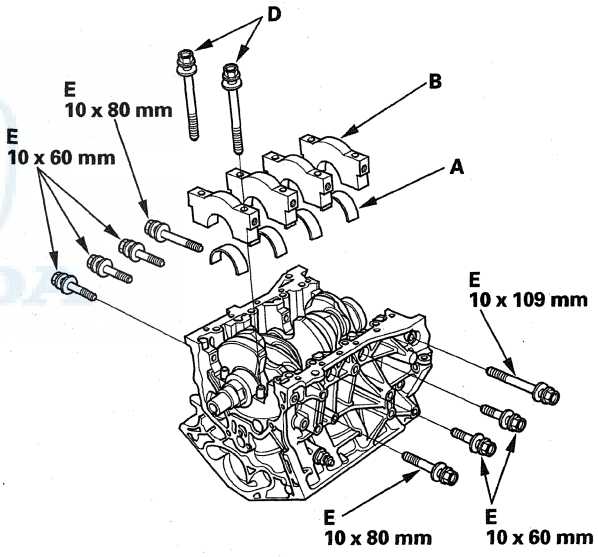

8. Apply new engine oil to the bolt threads and flanges, then loosely install the bearing cap bolts (D) and bearing cap side bolts (E).

(cont'd)

Crankshaft and Piston Installation (cont'd)

9. Set the crankshaft to bottom dead center (BDC) for the cylinder you are installing the piston in.

10. Apply new engine oil to the piston, inside of the ring compressor, and the cylinder bore.

11. Attach the ring compressor to the piston/connecting rod assembly, and check that the bearing is securely in place.

12. Position the piston/connecting rod assembly with the arrow (A) facing the timing belt side of the engine.

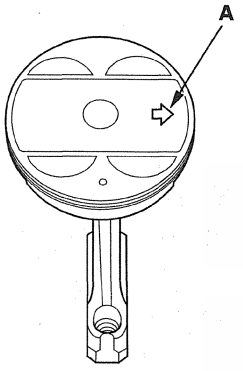

13. Position the piston/connecting rod assembly in the cylinder, and tap it in using the wooden handle of a hammer (A). Maintain downward force on the ring compressor (B) to prevent the rings from expanding before entering the cylinder bore.

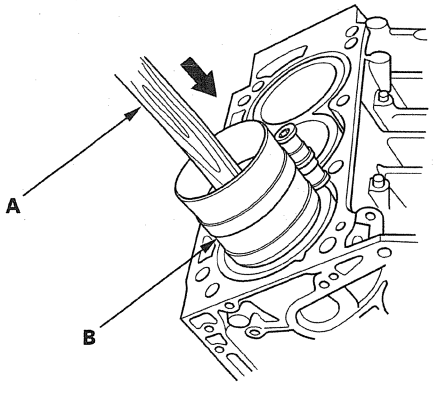

14. Stop after the ring compressor pops free, and check the connecting rod-to-crank journal alignment before pushing the piston into place.

15. Measure the diameter of each connecting rod bolt at point A and point B.

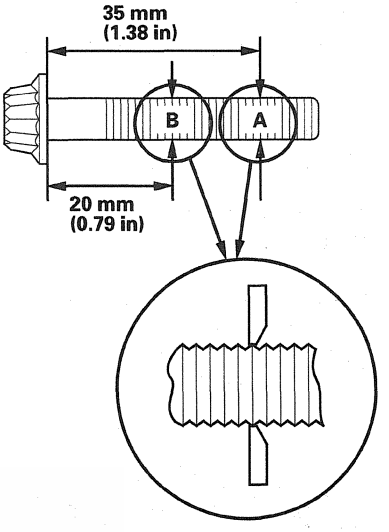

16. Calculate the difference in diameter between point A and point B.

Point A—Point B = Difference in Diameter

Difference in Diameter
Specification: 0—0.1 mm (0—0.004 in)

17. If the difference in diameter is out of tolerance, replace the connecting rod bolt.

18. Line up the mark (A) on the connecting rod and cap, then install the cap.

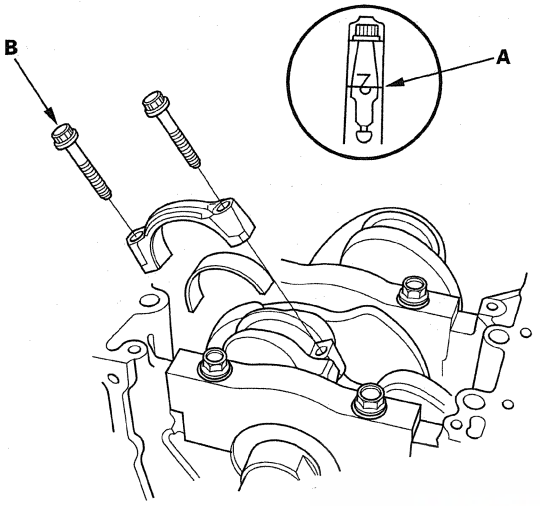

19. Apply new engine oil to the bolt threads and flanges. Torque the bolts (B) to 20 N·m (2.0 kgf·m, 14 lbf·ft).

20. Mark the connecting rod (A) and bolt head (B) as shown.

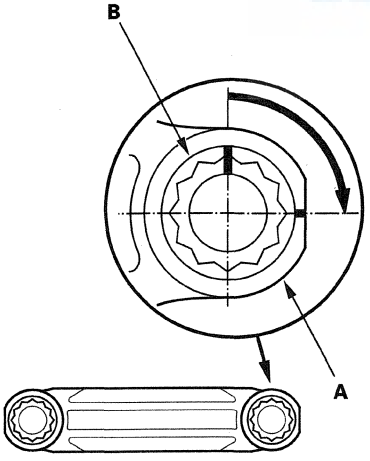

21. Tighten the bolt until the mark on the bolt head lines up with the mark on the connecting rod (turn the bolt 90 °).

NOTE: Remove the connecting rod bolt if you tightened it beyond the specified angle, and go back to step 15 of the procedure. Do not loosen it back to the specified angle.

22. Tighten the bearing cap bolts, and then the bearing cap side bolts to the specified torque in the sequence as shown. Repeat the torque sequence again to measure the bolts are properly torqued.

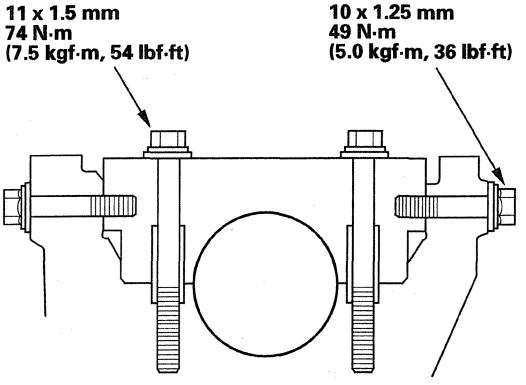

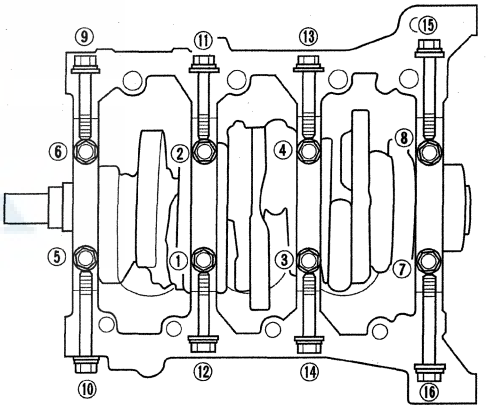

(cont'd)

Crankshaft and Piston Installation (cont'd)

23. Apply a light coat of multipurpose grease to the crankshaft and to the lip of the seal.

24. Drive the new crankshaft oil seal until the driver attachment bottoms on the engine block end cover.

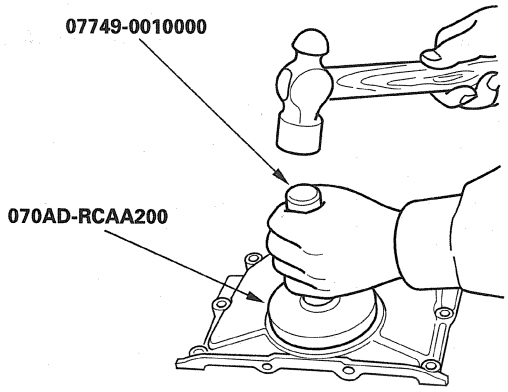

25. Remove all of the old liquid gasket from the engine block end cover mating surfaces, bolts, and bolt holes.

26. Clean and dry the engine block end cover mating surfaces.

27. Apply liquid gasket (P/N 08717-0004, 08718-0001, 08718-0003, or 08718-0009) to the engine block mating surface of the engine block end cover and to the inside edge of the threaded bolt holes. Install the component within 5 minutes of applying the liquid gasket.

NOTE:
- Apply liquid gasket about 2.5 mm (0.098 in) diameter bead along the broken line (A).
- If you apply liquid gasket P/N 08718-0012, the component must be installed within 4 minutes.
- If too much time has passed after applying the liquid gasket, remove the old liquid gasket and residue, then reapply new liquid gasket.

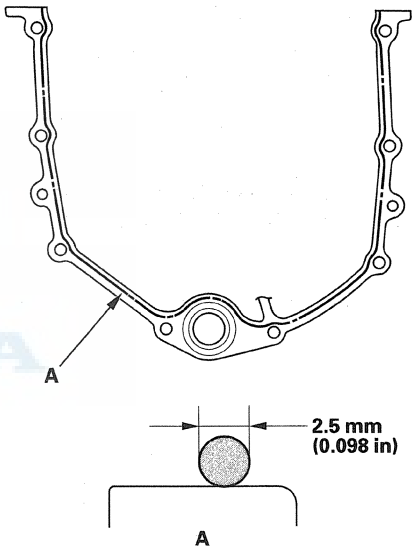

28. Install the dowel pins (A), new O-ring (B), and the engine block end cover (C) on the engine block.

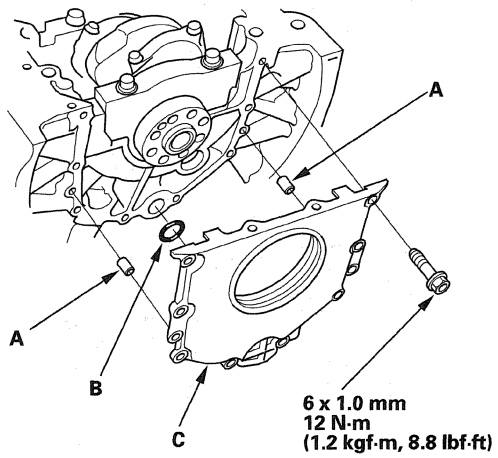

29. Clean the excess grease off the crankshaft, and check the seal for distortion.

30. Install a new crankshaft oil seal in the oil pump (see step 2 on page 8-18).

31. Remove all of the old liquid gasket from the oil pump mating surfaces, bolts, and bolt holes.

32. Clean and dry the oil pump mating surfaces.

33. Apply liquid gasket (P/N 08717-0004, 08718-0001, 08718-0003, or 08718-0009) to the engine block mating surface of the oil pump and to the inside edge of the threaded bolt holes. Install the component within 5 minutes of applying the liquid gasket.

NOTE:
- Apply liquid gasket about 2.5 mm (0.098 in) diameter bead along the broken line (A).
- If you apply liquid gasket P/N 087178-0012, the component must be installed within 4 minutes.
- If too much time has passed after applying the liquid gasket, remove the old liquid gasket and residue, then reapply new liquid gasket.

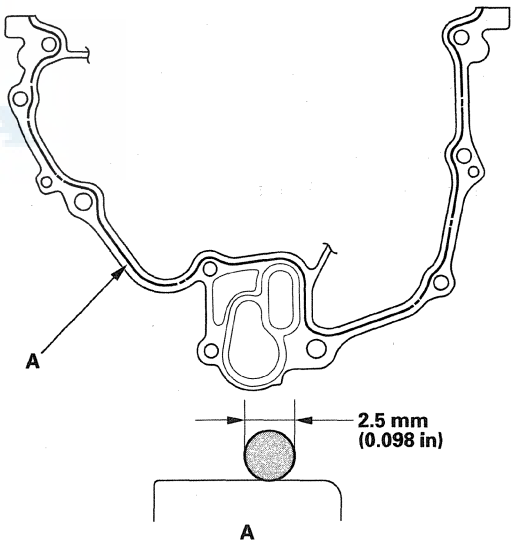

(cont'd)

Crankshaft and Piston Installation (cont'd)

34. Grease the lip of the oil seal, and apply new engine oil to the new O-ring (A).

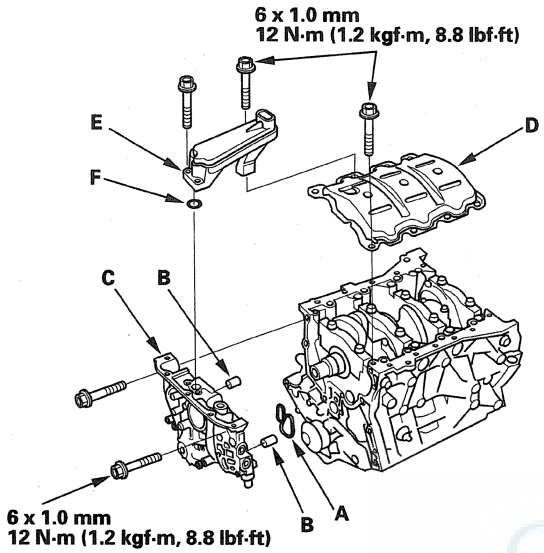

35. Install the dowel pins (B), then align the inner rotor with the crankshaft, and install the oil pump (C).

36. Clean the excess grease off the crankshaft, and check the seal for distortion.

37. Install the baffle plate (D), then install the oil screen (E) with the new O-ring (F).

38. Install the rocker arm oil control solenoid/oil filter assembly (A), with a new rocker arm oil control solenoid filter (B).

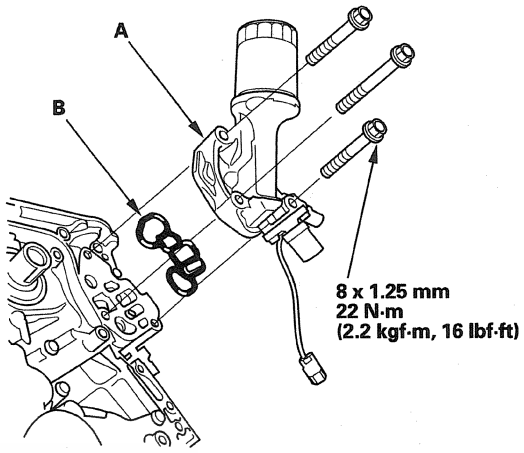

39. Install the oil pan (see page 7-29).

40. Install the crankshaft position (CKP) sensor (see page 11-229).

41. Install the cylinder heads (see page 6-59).

42. Install the drive plate.

43. Install the transmission (see page 14-214).

44. Install the engine assembly (see page 5-12).

NOTE: When any crankshaft or connecting rod bearing is replaced, after assembly it is necessary to run the engine at idling speed until it reaches normal operating temperature, then continue to run it for about 15 minutes.

Oil Pan Installation

1. Remove all of the old liquid gasket from the oil pan mating surfaces, the bolts, and the bolt holes.

2. Clean and dry the oil pan mating surfaces.

3. Apply liquid gasket (P/N 08717-0004, 08718-0001, 08718-0003, or 08718-0009) to the engine block mating surface of the oil pan and to the inside edge of the threaded bolt holes. Install the component within 5 minutes of applying the liquid gasket.

   NOTE:
   - Apply liquid gasket about 2.5 mm (0.098 in) diameter bead along the broken line (A).
   - If you apply liquid gasket P/N 08718-0012, the component must be installed within 4 minutes.
   - If too much time has passed after applying the liquid gasket, remove the old liquid gasket and residue, then reapply new liquid gasket.

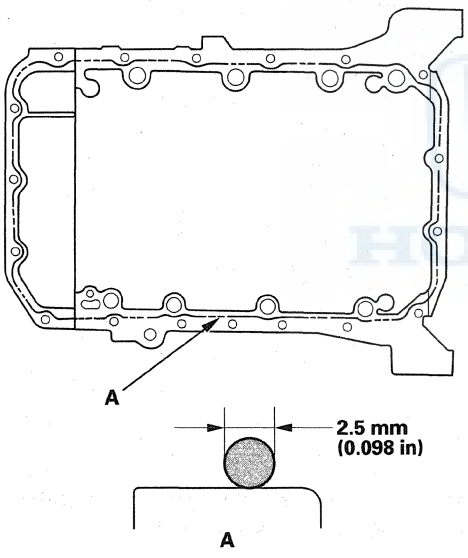

4. Install the oil pan on the engine block.

5. Tighten the bolts in three steps. In the final step, tighten all bolts, in sequence, to 12 N·m (1.2 kgf·m, 8.8 lbf·ft).

   NOTE:
   - Wait at least 30 minutes to allow liquid gasket to cure before filling the engine with oil.
   - Do not run the engine for at least 3 hours after installing the oil pan.

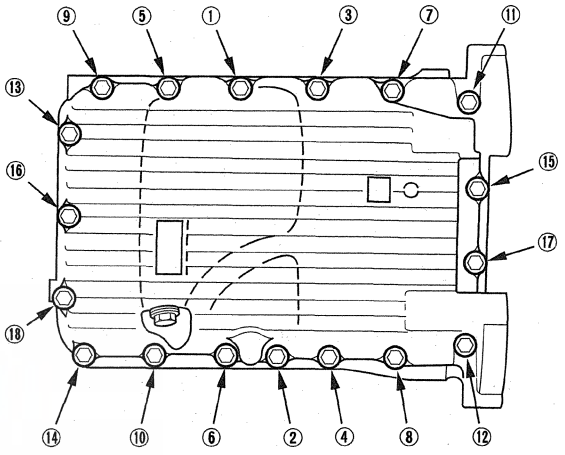

6. Tighten the four bolts (A) securing the transmission, then install the torque converter cover (B).

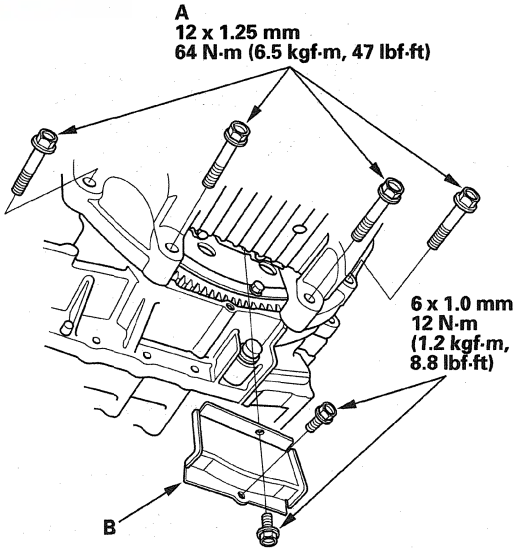

(cont'd)

Oil Pan Installation (cont'd)

7. Install the rear warm up three way catalytic converter (rear WU-TWC) bracket.

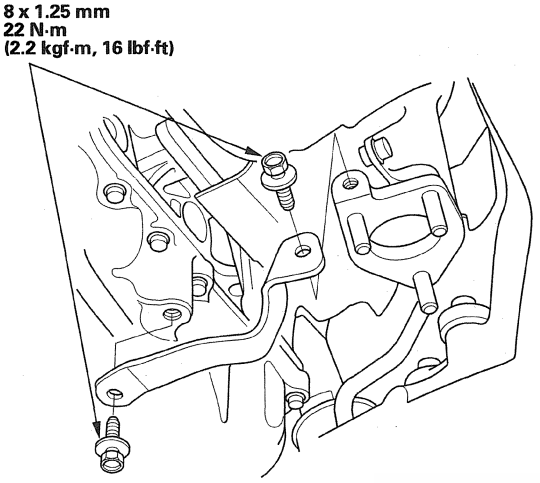

8. If the engine is still in the vehicle, do the following steps.

9. Install exhaust pipe A, using new gaskets (B) and new self-locking nuts (C).

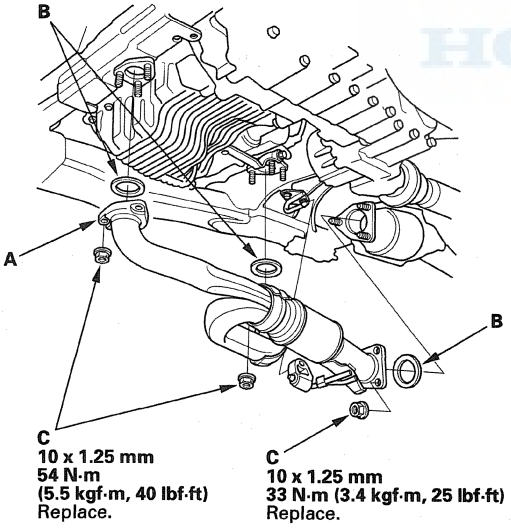

10. Install the splash shield (see step 39 on page 5-17).

11. Refill the engine with oil (see step 4 on page 8-11).

12. Lower the vehicle on the lift.

Pulley End Crankshaft Oil Seal Installation - In Car

Special Tools Required
Oil seal driver, 64 mm 070AD-RCAA100

1. Remove the crankshaft position (CKP) sensor, the timing belt, and the timing belt drive pulley (see page 6-28).

2. Remove the pulley end crankshaft oil seal.

3. Clean and dry the crankshaft oil seal housing.

4. Apply a light coat of multipurpose grease to the crankshaft and to the lip of the seal.

5. Using the seal driver, drive in the crankshaft oil seal until the driver bottoms against the oil pump. When the seal is in place, clean any excess grease off the crankshaft, and check that the oil seal lip is not distorted.

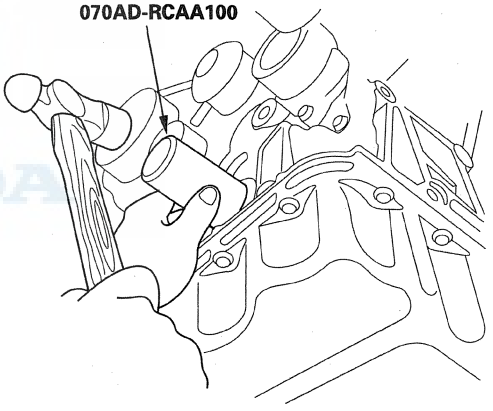

6. Install the timing belt drive pulley, the timing belt, and the CKP sensor (see page 6-28).

Transmission End Crankshaft Oil Seal Installation - In Car

Special Tools Required
- Driver Handle, 15 x 135L 07749-0010000
- Driver attachment, 106 mm 070AD-RCAA200

1. Remove the transmission (see page 14-201) and the drive plate (see page 14-214).
2. Remove the transmission end crankshaft oil seal.
3. Clean and dry the crankshaft oil seal housing.
4. Apply a light coat of multipurpose grease to the crankshaft and to the lip of the seal.
5. Using the special tools, drive in the crankshaft oil seal until the driver attachment bottoms against the engine block end cover. Align the hole in the driver attachment with the pin on the crankshaft.

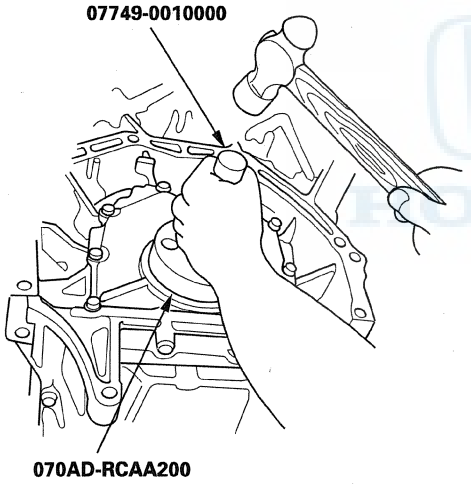

6. Clean any excess grease off the crankshaft, and check that the oil seal lip is not distorted.
7. Install the drive plate (see page 14-214), and the transmission.

Sealing Bolt Installation

NOTE: When installing the sealing bolt (A), always use a new washer.

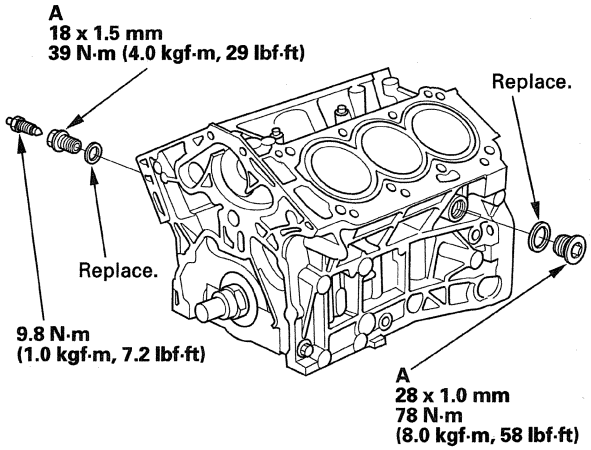

Engine Mechanical

Engine Lubrication

Special Tools 8-2
Component Location Index 8-3
Symptom Troubleshooting Index 8-5
Low Oil Pressure Indicator Circuit Diagram 8-6
Low Oil Pressure Indicator Circuit Troubleshooting (Open) 8-7
Low Oil Pressure Indicator Circuit Troubleshooting (Short) 8-8
Oil Pressure Switch Test 8-9
Oil Pressure Switch Replacement 8-9
Oil Pressure Test 8-10
Engine Oil Level Check 8-11
Engine Oil Replacement 8-11
Engine Oil Filter Replacement 8-12
Oil Filter Feed Pipe Replacement 8-13
Oil Jet Replacement 8-14
Oil Jet Bolt Inspection 8-14
Oil Pump Overhaul 8-15

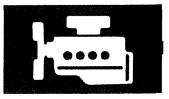

HONDA

Special Tools

Ref. No.	Tool Number	Description	Qty
①	07AAA-PLCA100	Oil Filter Wrench	1
②	07NAJ-P07010A	Pressure Gauge Adapter	1
③	07ZAJ-S5AA200	Oil Pressure Hose	1
④-1	07MAJ-PY4011A	A/T Pressure Hose, 2,210 mm	1
④-2	07MAJ-PY40120	A/T Pressure Hose, Adapter	1
④-3	07406-0020201	A/T Pressure Hose	1
④-4	07406-0070301	A/T Low Pressure Gauge W/Panel	1
⑤	070AD-RCAA100	Oil Seal Driver, 64 mm	1

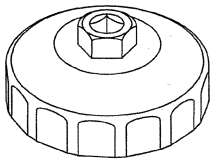

①

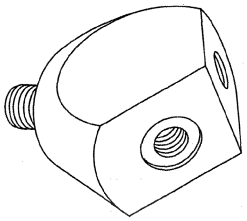

②

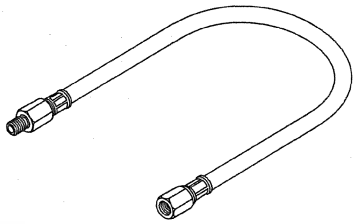

③

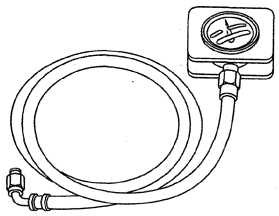

④-1, ④-2, ④-3, ④-4

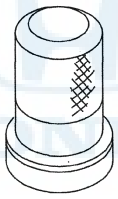

⑤

Component Location Index

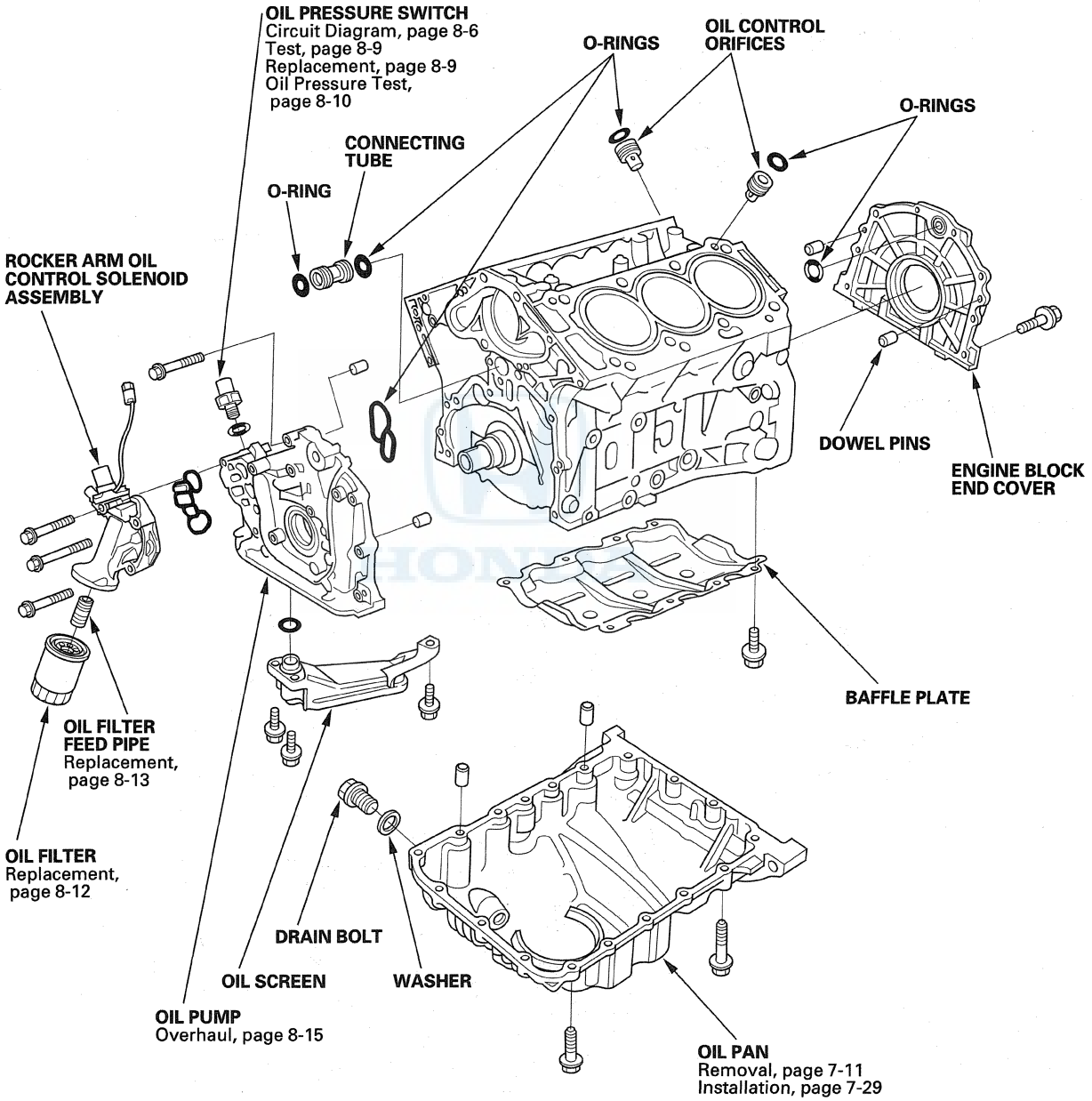

(cont'd)

Component Location Index (cont'd)

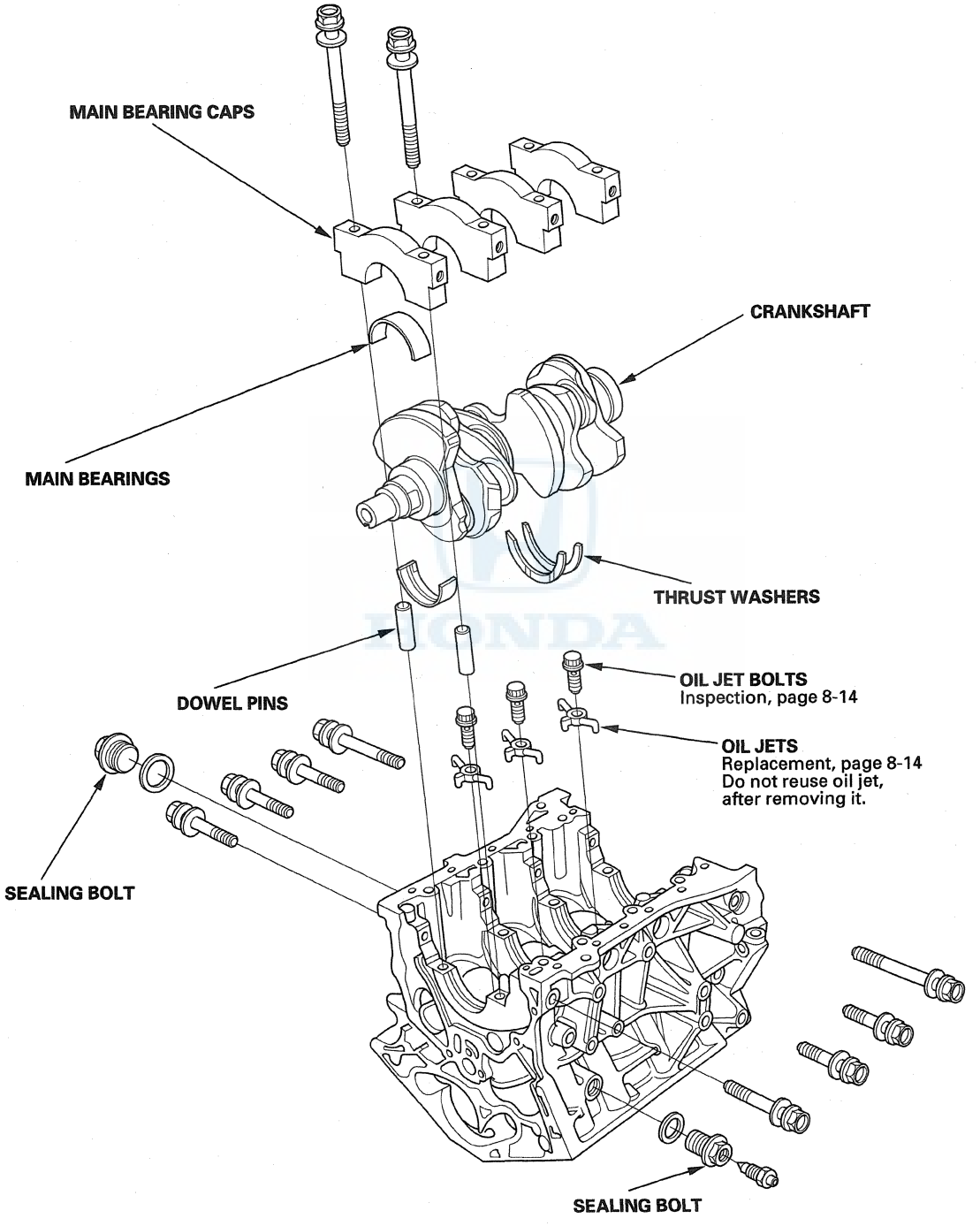

Symptom Troubleshooting Index

Symptom	Diagnostic procedure	Also check for
Excessive engine oil consumption	1. Verify the engine oil filler cap, the oil drain bolt, and the oil filter are tight. 2. Check for oil leaks. 3. Check for worn valve guide(s) (see page 6-49) or worn valve stem seal(s) (see page 6-48). 4. Check for damaged or worn piston ring(s) (see page 7-21). 5. Check for damaged or worn engine internal parts (cylinder wall, pistons, etc.) (see page 7-15).	
Low oil pressure indicator does not come on with the ignition switch in ON (II)	1. Do the low oil pressure indicator circuit troubleshooting procedure (Open) (see page 8-7). 2. Test the oil pressure switch (see page 8-9).	An open in the wire between the powertrain control module (PCM) and the oil pressure switch
Low oil pressure indicator stays on	1. Check the engine oil level. 2. Do the low oil pressure indicator circuit troubleshooting procedure (Short) (see page 8-8). 3. Test the oil pressure switch (see page 8-9). 4. Check the engine oil pressure (see page 8-10). 5. Check the oil filter for clogging. 6. Check the oil screen for clogging. 7. Check the relief valve (see page 8-15). 8. Test the oil pump (see page 8-17).	A wire shorted to ground between the powertrain control module (PCM) and the oil pressure switch

Low Oil Pressure Indicator Circuit Diagram

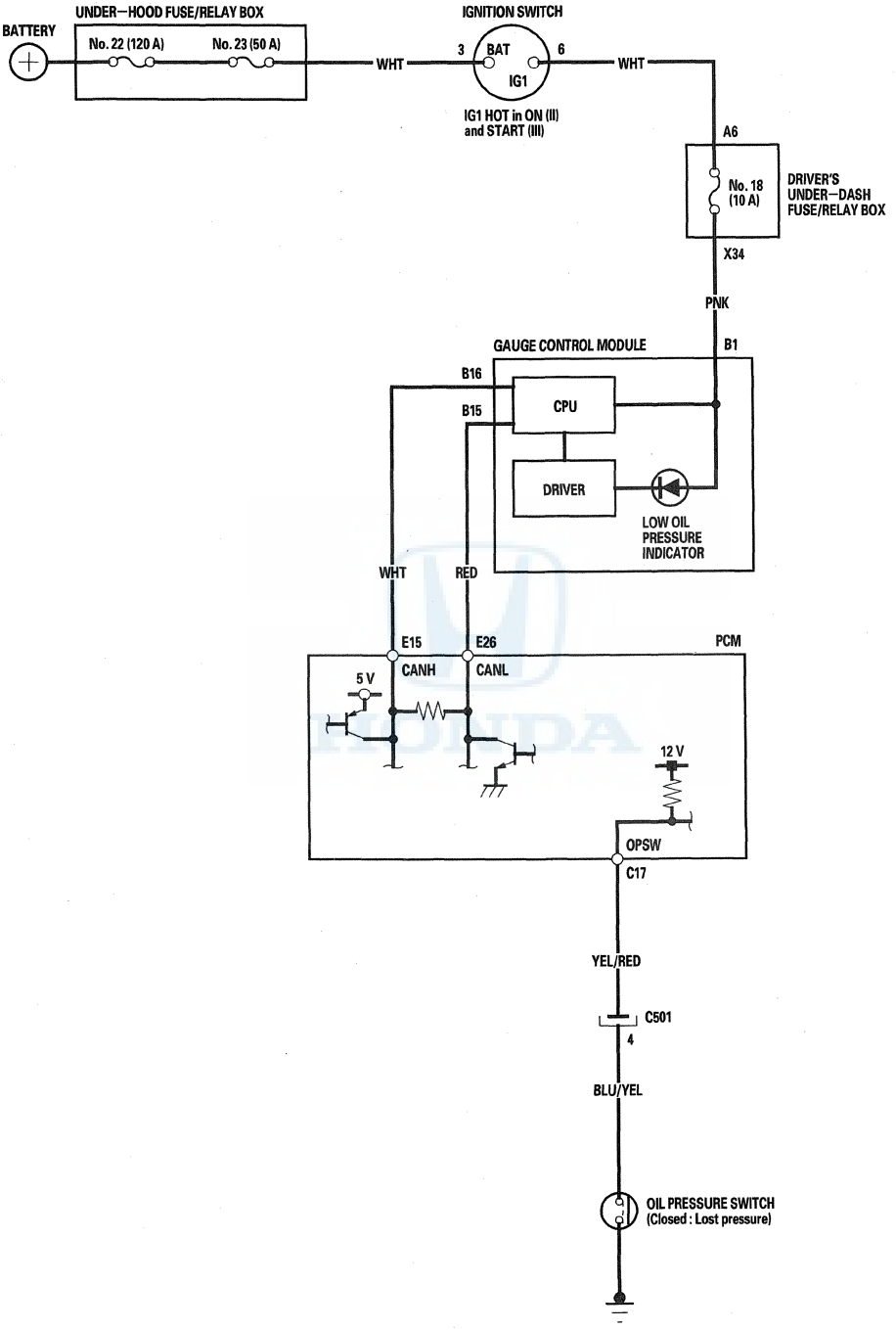

Low Oil Pressure Indicator Circuit Troubleshooting (Open)

1. Connect the Honda Diagnostic System (HDS) to the data link connector (DLC) (see step 2 on page 11-3).
2. Turn the ignition switch to ON (II).
3. Make sure the HDS communicates with the vehicle and the powertrain control module (PCM). If it doesn't, troubleshoot the DLC circuit (see page 11-211).
4. Check for DTCs (see page 11-3). If a DTC is present, diagnose and repair the cause before continuing with this test.
5. With the ignition switch in ON (II), select PGM-FI, and check the OIL PRESSURE SWITCH in the DATA LIST with the HDS.

   Is ON indicated?

   YES—Replace the gauge control module (see page 22-419). ■

   NO—Go to step 6.
6. Check the oil pressure switch (see page 8-9).

   Is the oil pressure switch OK?

   YES—Go to step 7.

   NO—Replace the oil pressure switch (see page 8-9). ■
7. With the ignition switch in ON (II), jump the SCS line with the HDS, then turn the ignition switch to LOCK (0).

   NOTE: This step must be done to protect the PCM from damage.
8. Disconnect PCM connector C (22P) and the oil pressure switch connector.
9. Check for continuity between PCM connector terminal C17 and the oil pressure switch connector.

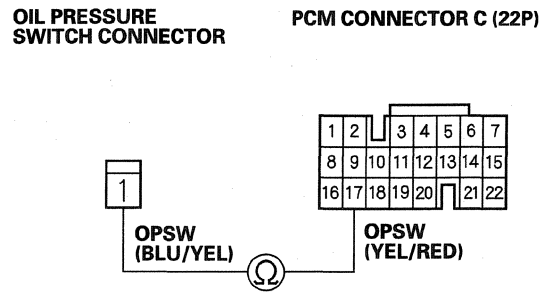

Wire side of female terminals

Is there continuity?

YES—Update the PCM if it does not have the latest software (see page 11-230), or substitute a known-good PCM (see page 11-7), then recheck. If the symptom/indication goes away with a known-good PCM, replace the original PCM (see page 11-232). ■

NO—Repair an open in the wire between the oil pressure switch and the PCM. ■

Low Oil Pressure Indicator Circuit Troubleshooting (Short)

1. Connect the Honda Diagnostic System (HDS) to the data link connector (DLC) (see step 2 on page 11-3).
2. Turn the ignition switch to ON (II).
3. Make sure the HDS communicates with the vehicle and the powertrain control module (PCM). If it doesn't, troubleshoot the DLC circuit (see page 11-211).
4. Check for DTCs (see page 11-3). If a DTC is present, diagnose and repair the cause before continuing with this test.
5. Start the engine, select PGM-FI, and check the OIL PRESSURE SWITCH in the DATA LIST with the HDS.

   Is OFF indicated?

   YES—Replace the gauge control module (see page 22-419). ■

   NO—Go to step 6.
6. Turn the ignition switch to LOCK (0).
7. Disconnect the oil pressure switch connector.
8. Start the engine and check the OIL PRESSURE SWITCH in the DATA LIST with the HDS.

   Is OFF indicated?

   YES—Go to step 9.

   NO—Go to step 10.
9. Check the oil pressure switch (see page 8-9).

   Is the oil pressure switch OK?

   YES—Do the oil pressure test (see page 8-10).

   NO—Replace the oil pressure switch (see page 8-9). ■
10. Turn the ignition switch to ON (II), and jump the SCS line with the HDS, then turn the ignition switch to LOCK (0).

    NOTE: This step must be done to protect the PCM from damage.
11. Disconnect PCM connector C (22P) and the oil pressure switch connector.
12. Check for continuity between the oil pressure switch connector and body ground.

OIL PRESSURE SWITCH CONNECTOR

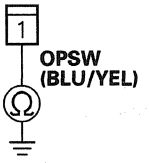

Terminal side of female terminal

Is there continuity?

YES—Repair a short in the wire between the oil pressure switch and the PCM. ■

NO—Update the PCM if it does not have the latest software (see page 11-230) or substitute a known-good PCM (see page 11-7), then recheck. If the symptom/indication goes away with a known-good PCM, replace the original PCM (see page 11-232). ■

Oil Pressure Switch Test

1. Disconnect the oil pressure switch connector (A) from the engine oil pressure switch (B).

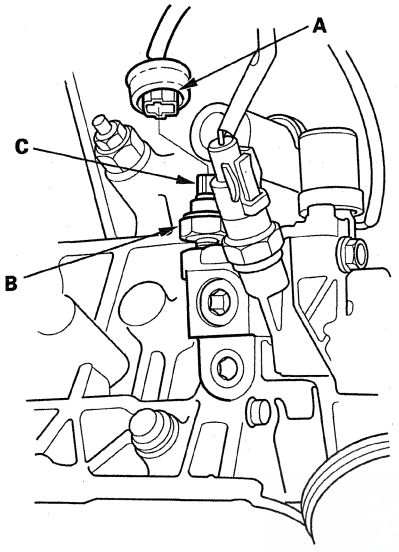

2. Check for continuity between the positive terminal (C) and the engine (ground). There should be no continuity with the engine stopped. There should be continuity with the engine running.

Oil Pressure Switch Replacement

1. Disconnect the oil pressure switch connector, then remove the oil pressure switch (A).

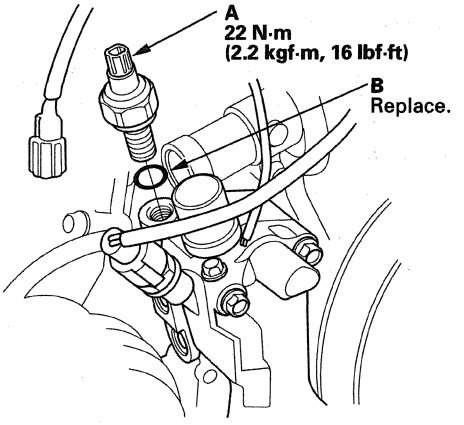

2. Remove all of the old liquid gasket from the switch and the switch mounting hole.

3. Apply a very small amount of liquid gasket to the oil pressure switch threads, then install the oil pressure switch with a new O-ring (B).

   NOTE: Using too much liquid gasket may cause liquid gasket to enter the oil passage or the end of the new oil pressure switch.

4. Connect the oil pressure switch connector.

Oil Pressure Test

Special Tools Required
- Pressure gauge adapter 07NAJ-P07010A
- Oil pressure hose 07ZAJ-S5AA200
- A/T pressure hose 07406-0020201
- A/T low pressure gauge w/panel 07406-0070301
- A/T pressure hose, 2,210 mm 07MAJ-PY4011A
- A/T pressure hose adapter 07MAJ-PY40120

If the low oil pressure indicator stays on with the engine running, check the engine oil level. If the oil level is correct:

1. Remove the oil pressure switch (A).

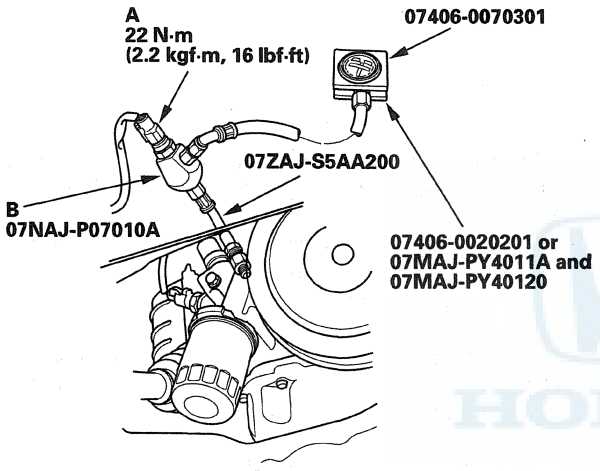

2. Install the oil pressure hose, the A/T pressure hose, the A/T low pressure gauge w/panel, the A/T pressure hose, 2,210 mm and the A/T pressure hose adapter.

3. Install the oil pressure switch in the pressure gauge adapter (B).

4. Start the engine. Shut it off immediately if the gauge registers no oil pressure. Repair the problem before continuing.

5. Allow the engine to reach operating temperature (fan comes on at least twice). The pressure should be:

   Engine Oil Temperature: 176 °F (80 °C)
   Engine Oil Pressure:
   At Idle: 70 kPa (0.7 kgf/cm², 10 psi) min.
   At 3,000 rpm: 490 kPa (5.0 kgf/cm², 71 psi) min.

6. If oil pressure is not within specifications, inspect these items:

   - Inspect the oil pressure relief valve (see page 8-15).
   - Check the oil screen for clogging.
   - Inspect the oil pump (see page 8-17).

Engine Oil Level Check

1. Park the vehicle on level ground, and start the engine. Hold the engine speed at 3,000 rpm with no load (in Neutral) until the radiator fan comes on, then turn off the engine, and wait a few minute.
2. Remove the dipstick, and wipe off the dipstick, then reinstall the dipstick.
3. Remove the dipstick, and check the engine oil level. It should be between the upper mark (A) and lower mark (B).

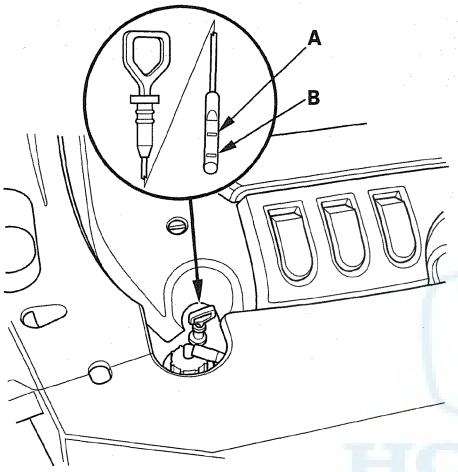

4. If the engine oil level is near or below the lower mark, add the recommended engine oil (see page 3-2) to bring it between the upper and lower marks.

Engine Oil Replacement

1. Warm up the engine.
2. Remove the drain bolt (A), and drain the engine oil.

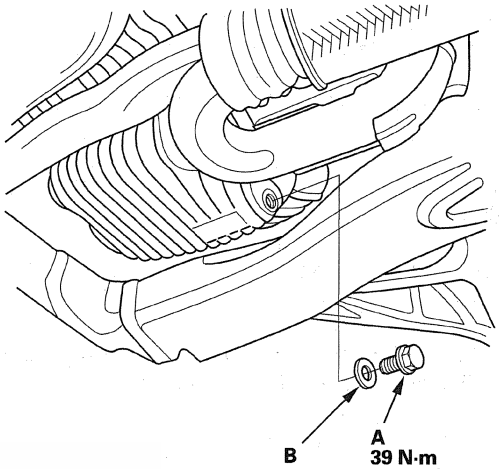

3. Reinstall the drain bolt with a new washer (B).
4. Refill with the recommended oil (see page 3-2).

Capacity
At Oil Change:
4.0 L (4.2 US qt)
At Oil Change Including Filter:
4.3 L (4.5 US qt)
After Engine Overhaul:
5.0 L (5.3 US qt)

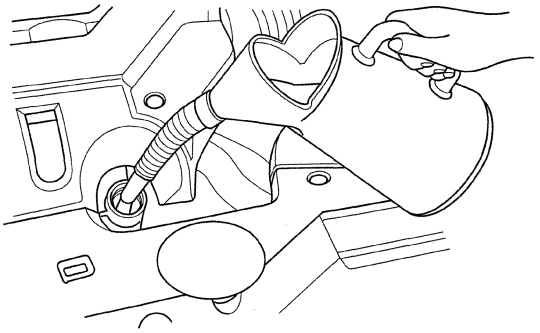

(cont'd)

Engine Oil Replacement (cont'd)

5. Connect the Honda Diagnostic System (HDS) to the data link connector (DLC) (see step 2 on page 11-3).
6. Turn the ignition switch to ON (II).
7. Select the BODY ELECTRICAL with the HDS.
8. Select the ADJUSTMENT in GAUGE MENU with the HDS.
9. Select the RESET in the MAINTENANCE MINDER with the HDS.
10. Select the RESETTING THE ENGINE OIL LIFE with the HDS.
11. Run the engine for more than 3 minutes, then check the oil level and check for oil leakage.

Engine Oil Filter Replacement

Special Tools Required
Oil filter wrench 07AAA-PLCA100

1. Drain the engine oil (see page 8-11).
2. Remove the oil filter with the oil filter wrench.
3. Inspect the filter to make sure the rubber seal is not stuck to the oil filter seating surface of the engine.
4. Inspect the threads (A) and the rubber seal (B) on the new filter. Clean the seat on the engine block, then apply a light coat of new engine oil to the filter rubber seal. Use only filters with a built-in bypass system.

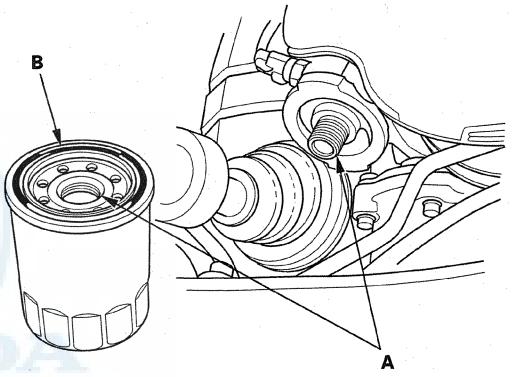

5. Install the oil filter by hand.
6. After the rubber seal seats, tighten the oil filter clockwise with the oil filter wrench.

Tighten: 3/4 Turn Clockwise
Tightening Torque: 12 N·m (1.2 kgf·m, 8.8 lbf·ft)

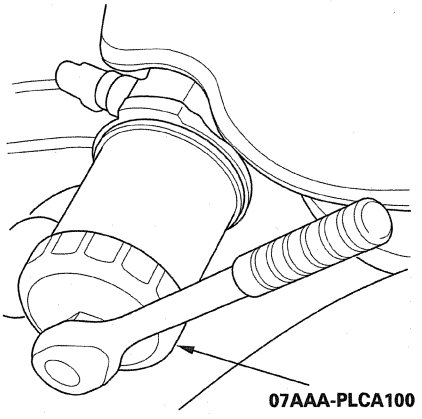

7. If four numbers or marks (1 to 4 or ▼ to ▼▼▼▼) are printed around the outside of the filter, you can use the following procedure to tighten the filter.

   - Spin the filter on until its seal lightly seats against the block, and note which number or mark is at the bottom.
   - Tighten the filter by turning it clockwise three numbers or marks from the one you noted. For example, if mark ▼ is at the bottom when the seal is lightly seated, tighten the filter until the mark ▼▼▼▼ comes around to the bottom.

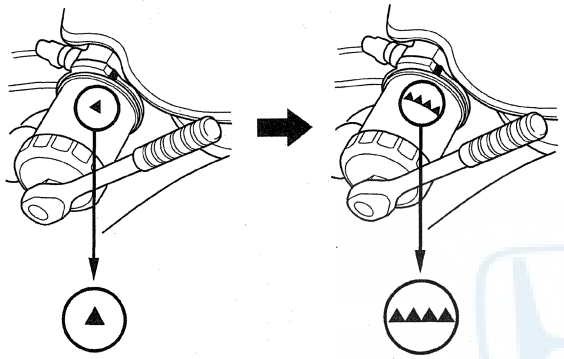

Mark when rubber seal is seated.

Mark after tightening.

Number or Mark when rubber seal is seated	1 or ▼	2 or ▼▼	3 or ▼▼▼	4 or ▼▼▼▼
Number or Mark after tightening	4 or ▼▼▼▼	1 or ▼	2 or ▼▼	3 or ▼▼▼

8. Refill with new engine oil (see page 8-11), run the engine for more than 3 minutes, then recheck the oil level and check for oil leakage.

Oil Filter Feed Pipe Replacement

1. Remove the filter (see page 8-12).
2. Remove the oil filter feed pipe.

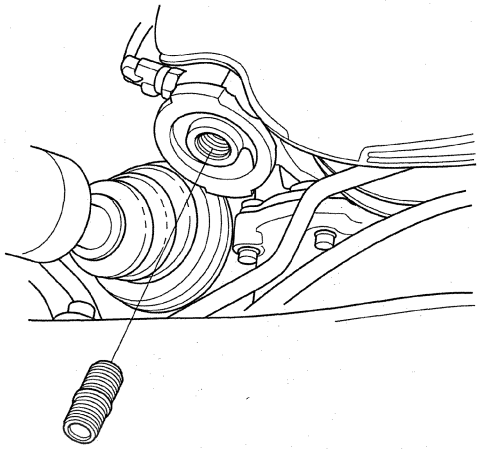

3. Install two 20 x 1.5 mm nuts (A) onto the new oil filter feed pipe, and hold one nut with a wrench, then tighten the other nut.

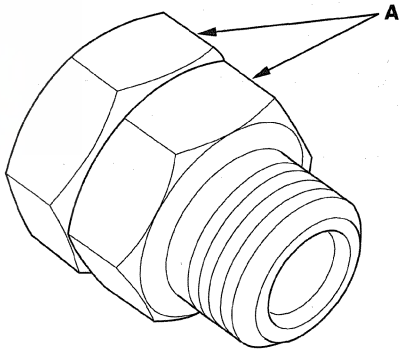

4. Tighten the oil filter feed pipe to 49 N·m (5.0 kgf·m, 36 lbf·ft), then remove the nuts from the oil filter feed pipe.

Oil Jet Replacement

1. Remove the crankshaft from the engine block (see page 7-12).
2. Remove the oil jet bolt (A), then remove and discard the oil jet (B).

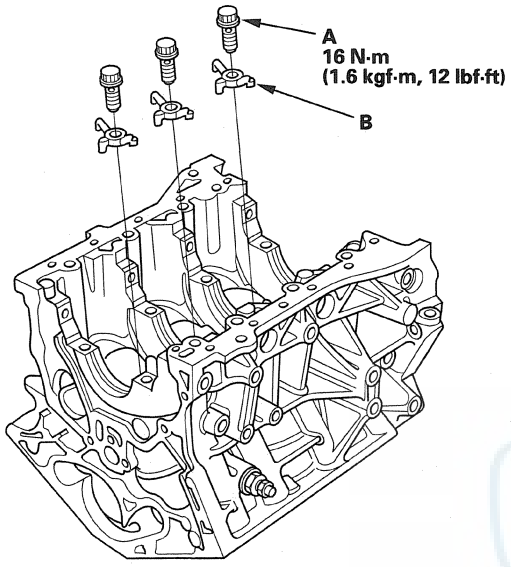

3. Carefully install the new oil jet and tighten the oil jet bolt.
4. Install the crankshaft (see page 7-23).

Oil Jet Bolt Inspection

1. Remove the oil jet bolt (see page 8-14).
2. Inspect the oil jet bolt as follows.
   - Make sure that a 0.6 mm (0.02 in) diameter drill will go through the oil intake (0.7 mm (0.03 in) diameter). Make sure the check ball (A) moves smoothly and has a stroke of about 4.0 mm (0.16 in)
   - Check the oil jet bolt operation with an air nozzle. It should take at least 120 kPa (1.2 kgf/cm, 17 psi) to unseat the check ball.

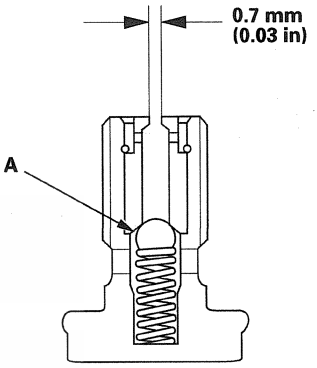

Oil Pump Overhaul

Exploded View

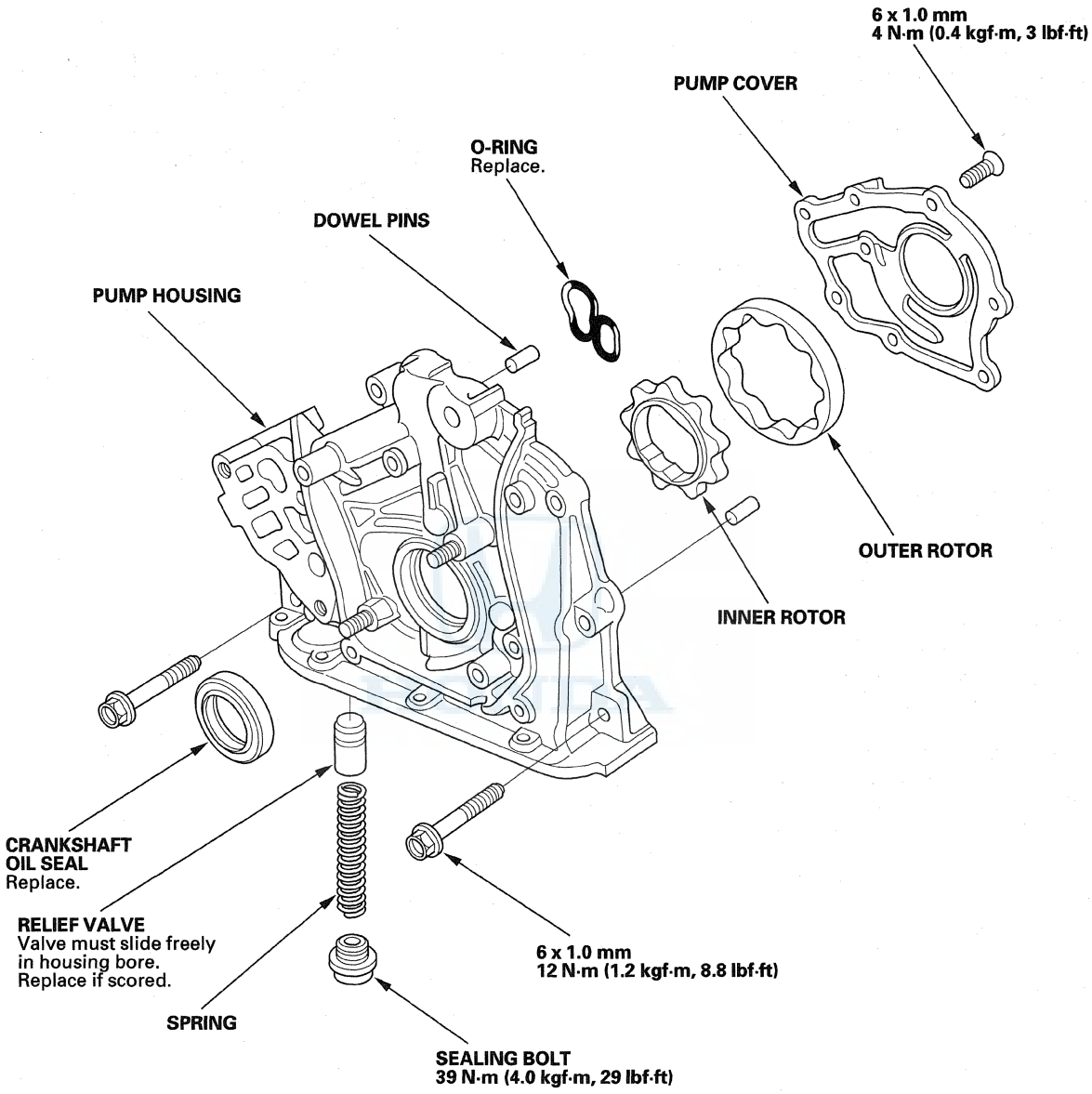

(cont'd)

Oil Pump Overhaul (cont'd)

Special Tools Required
- Oil seal driver, 64 mm 070AD-RCAA100
- 2008 V6 Attachment arm SIL02C000033 *
- Engine support hanger, A and Reds AAR-T1256 *
- Engine hanger balance bar VSB02C000019 *

* : Available through the Acura Tool and Equipment program, 888-424-6857.

Removal

1. Remove the right upper fender trim, the battery trim, the left upper fender trim, the upper grille cover (see page 20-163), and the cowl cover (see page 20-164).
2. Remove the under-hood fuse/relay box, the connector, and the transfer breather hose from the strut brace, then remove the strut brace (see step 16 on page 5-5).
3. Remove the connector bracket from the front cylinder head; use the bracket bolt hole to attach the engine balance bar front arm (see step 53 on page 5-9).
4. Remove the engine mount control solenoid valve bracket from the rear cylinder head; use the bracket bolt hole to attach the 2008 V6 attachment arm (see step 54 on page 5-9).
5. Lift and support the engine with the engine support hanger and engine balance bar. Attach the front arm to the front cylinder head with a spacer and the 10 x 1.25 mm bolt. Remove the rear arm from the balance bar, and install the 2008 V6 attachment arm, then attach the 2008 V6 attachment arm to the rear cylinder head with the 8 x 1.25 mm bolt (see step 55 on page 5-10).
6. Remove the timing belt (see page 6-16).
7. Remove the crankshaft position (CKP) sensor (see page 11-229).
8. Remove the rocker arm oil control solenoid/oil filter assembly (see step 9 on page 7-12).
9. Remove the oil pan (see page 7-11).
10. Remove the oil screen (A), then remove the oil pump (B).

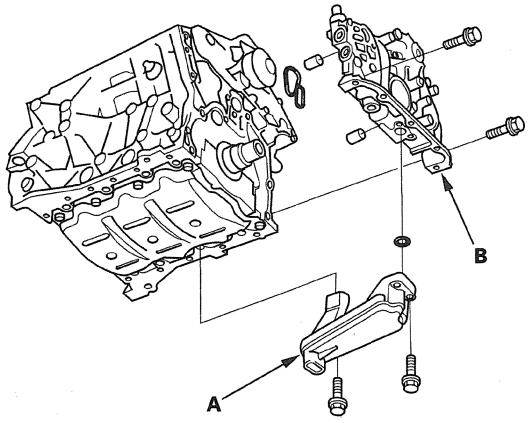

Inspection

1. Remove the screws from the pump housing, then separate the housing and cover.

2. Check the inner-to-outer rotor radial clearance between the inner rotor (A) and the outer rotor (B). If the inner-to-outer rotor clearance exceeds the service limit, replace the oil pump assembly.

Inner Rotor-to-Outer Rotor Radial Clearance
Standard (New): 0.04—0.14 mm (0.002—0.005 in)
Service Limit: 0.20 mm (0.008 in)

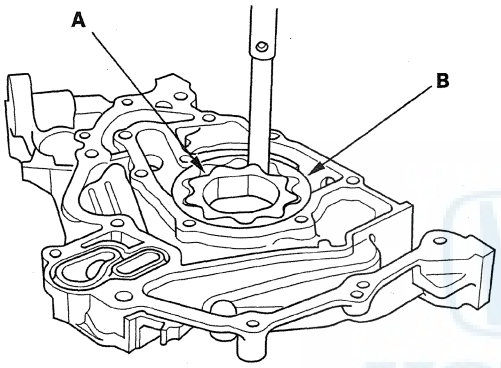

3. Check the housing-to-rotor axial clearance between the rotors (A) and the pump housing (B). If the housing-to-rotor axial clearance exceeds the service limit, replace the oil pump assembly.

Housing-to-Rotor Axial Clearance
Standard (New): 0.02—0.07 mm (0.001—0.003 in)
Service Limit: 0.12 mm (0.005 in)

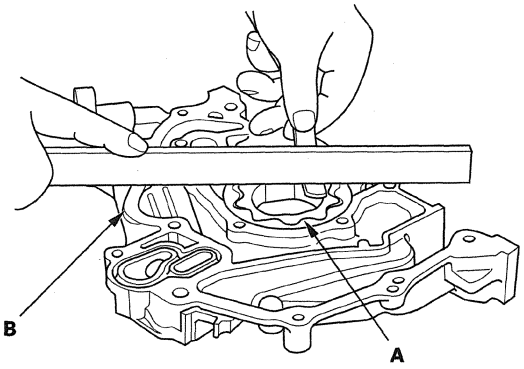

4. Check the housing-to-outer rotor radial clearance between the outer rotor (A) and the pump housing (B). If the housing-to-outer rotor radial clearance exceeds the service limit, replace the oil pump assembly.

Housing-to-Outer Rotor Radial Clearance
Standard (New): 0.10—0.19 mm (0.004—0.007 in)
Service Limit: 0.20 mm (0.008 in)

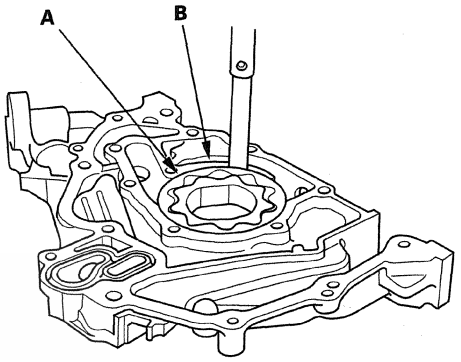

5. Inspect both rotors and the pump housing for scoring or other damage. Replace the parts, if necessary.

6. Apply liquid thread lock to the pump housing screws, then install the oil pump cover.

7. Make sure the oil pump turns freely.

(cont'd)

Oil Pump Overhaul (cont'd)

Installation

1. Remove the old oil seal from the oil pump.
2. Gently tap in the new oil seal until the oil seal driver bottoms on the pump.

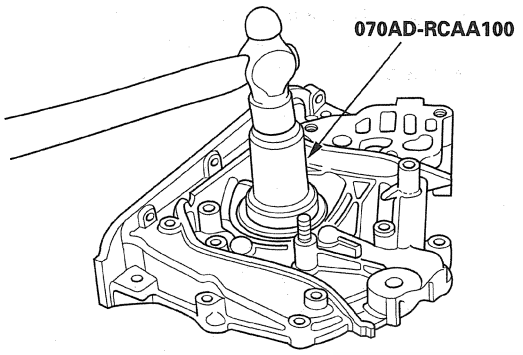

3. Remove all of the old liquid gasket from the oil pump mating surfaces, the bolts, and the bolt holes.
4. Clean and dry the oil pump mating surfaces.
5. Apply liquid gasket, (P/N 08717-0004, 08718-0001, 08718-0003, or 08718-0009) to the engine block mating surface of the oil pump and to the inside edge of the threaded bolt holes. Install the component within 5 minutes of applying the liquid gasket.

NOTE:
- Apply liquid gasket about 2.5 mm (0.098 in) diameter bead along the broken line (A).
- If you apply liquid gasket P/N 08718-0012, the component must be installed within 4 minutes.
- If too much time has passed after applying the liquid gasket, remove the old liquid gasket and residue, then reapply new liquid gasket.

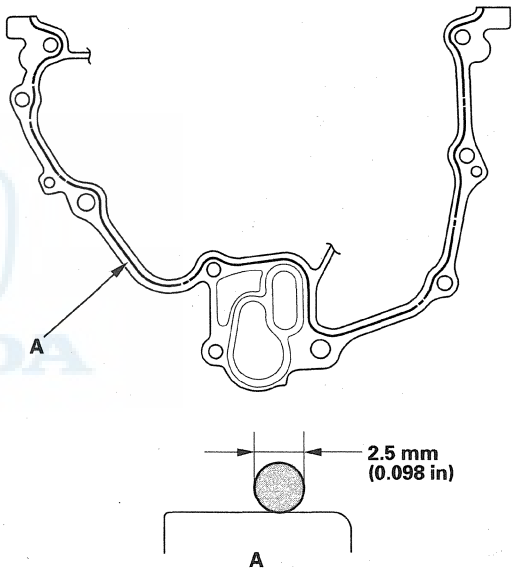

6. Grease the lip of the oil seal, and apply oil to the new O-ring (A).

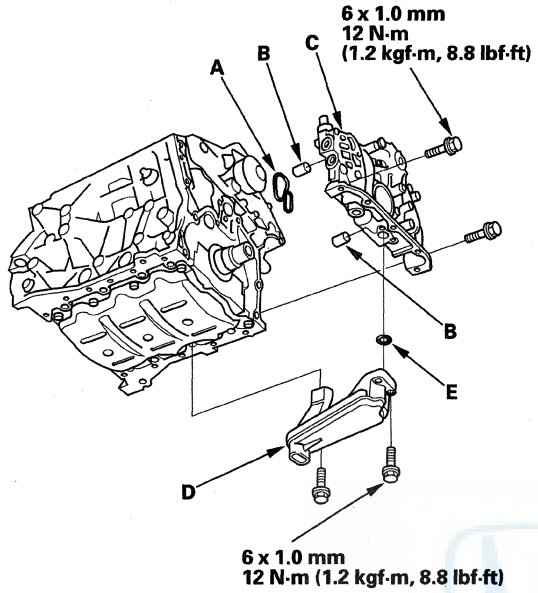

7. Install the dowel pins (B), then align the inner rotor with the crankshaft, and install the oil pump (C).

8. Clean the excess grease off the crankshaft, and check the seal for distortion.

9. Install the oil screen (D) with a new O-ring (E).

10. Install the rocker arm oil control solenoid/oil filter assembly, with a new rocker arm oil control solenoid filter (see step 38 on page 7-28).

11. Install the oil pan (see page 7-29).

12. Install the CKP sensor (see page 11-229).

13. Install the timing belt (see page 6-18).

14. Remove the engine balance bar and hanger.

15. Install the connector bracket to the front cylinder head (see step 46 on page 5-18).

16. Install the engine mount control solenoid valve bracket to the rear cylinder head (see step 47 on page 5-18).

17. Install the strut brace, then install the under-hood fuse/relay box, the connector, and the transfer breather hose (see step 59 on page 5-20).

18. Install the cowl cover, the upper grille cover, the left upper fender trim, the battery trim, and the right upper fender trim (see page 20-162).

Engine Mechanical

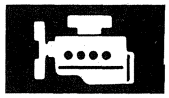

Intake Manifold and Exhaust System

Intake Manifold Removal and Installation 9-2
Injector Base Removal and Installation 9-6
Exhaust Pipe and Muffler Replacement 9-8



Intake Manifold and Exhaust System

Intake Manifold Removal and Installation

Exploded View

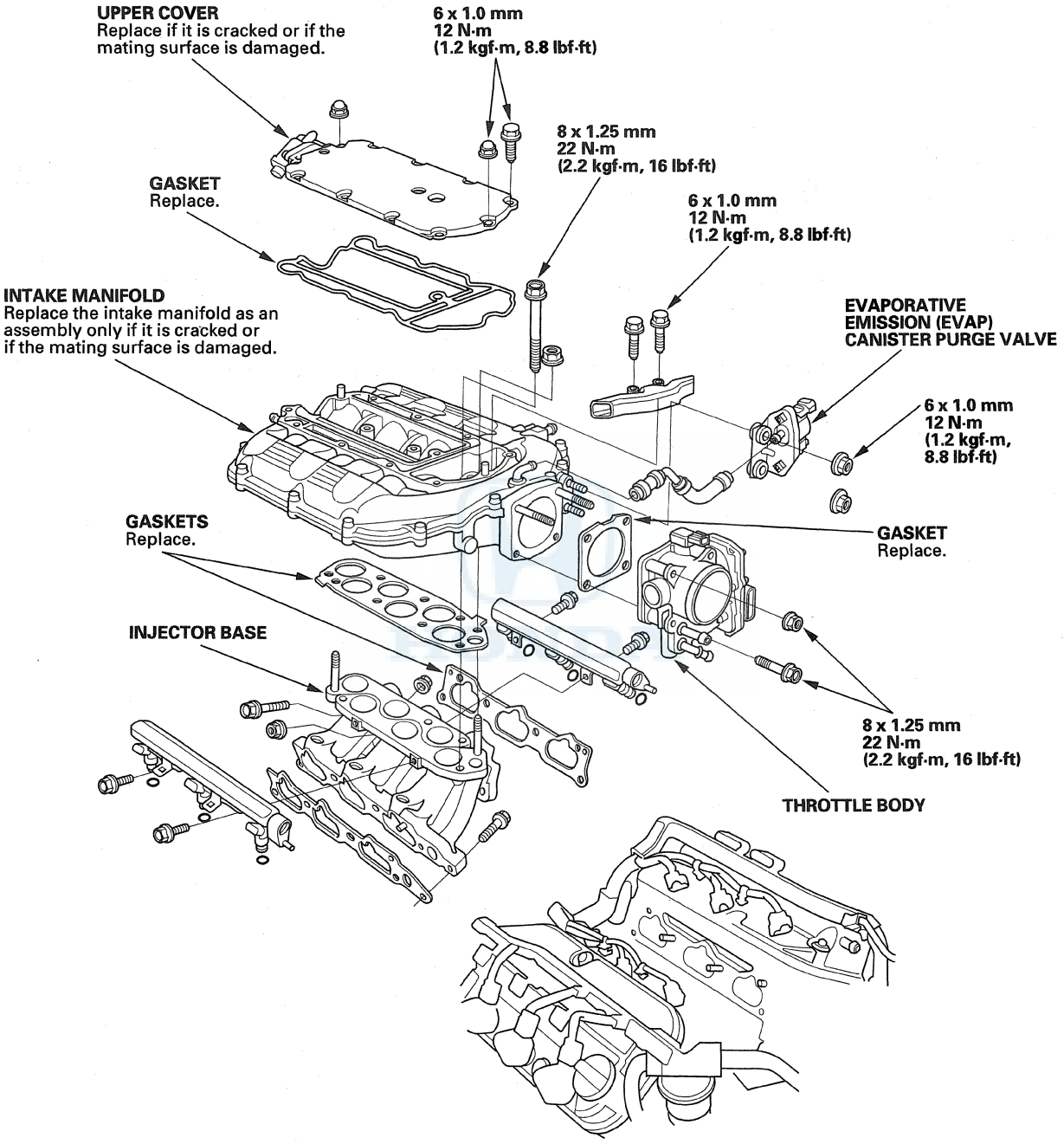

Removal

1. Remove the battery trim (see step 2 on page 20-162).

2. Remove the engine cover.

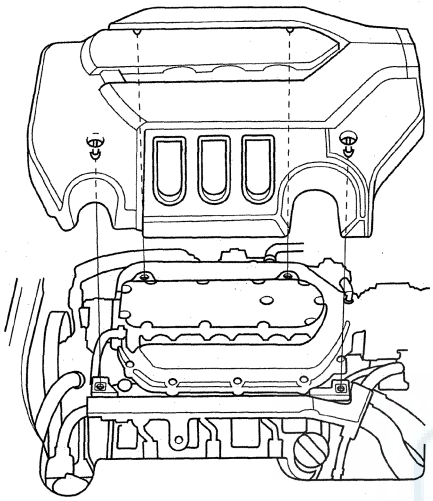

3. Disconnect the manifold absolute pressure (MAP) sensor connector (A), then remove the breather pipe (B) and the intake air duct (C).

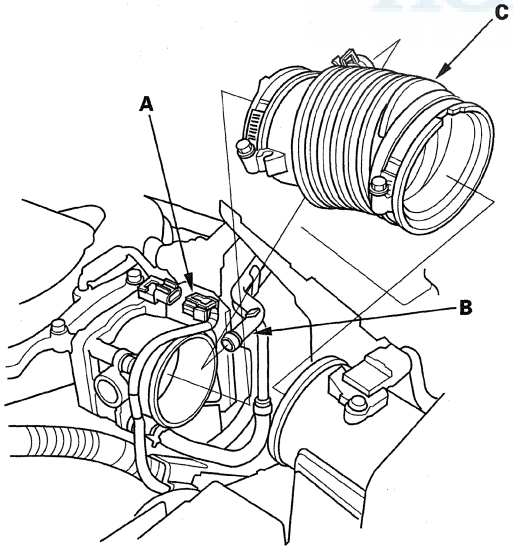

4. Disconnect the throttle actuator connector (A) and the evaporative emission (EVAP) canister purge valve connector (B), then remove the water bypass hoses (C), the EVAP hose (D), the brake booster vacuum hose (E), and the vacuum hose (F).

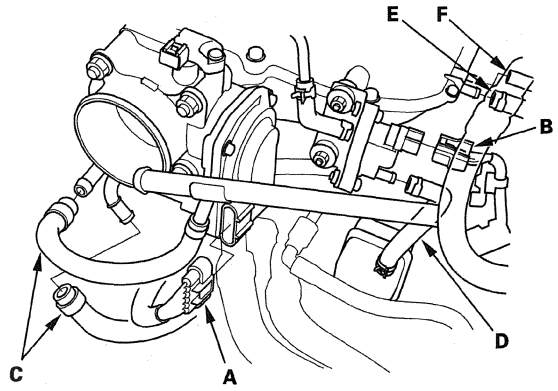

5. Remove the positive crankcase ventilation (PCV) hose (A), and disconnect the intake manifold tuning (IMT) actuator connector (B).

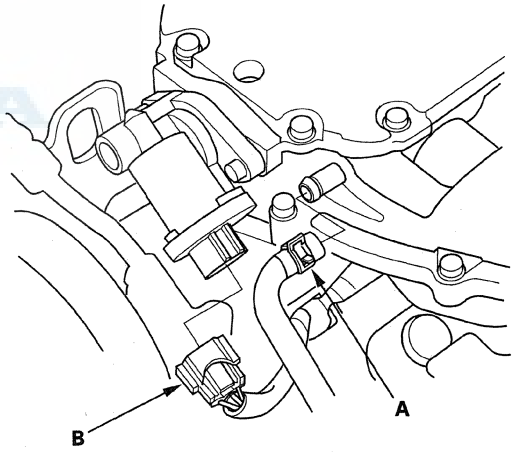

(cont'd)

Intake Manifold Removal and Installation (cont'd)

6. Remove the upper cover mounting bolts and nuts sequentially in three steps, then remove the upper cover.

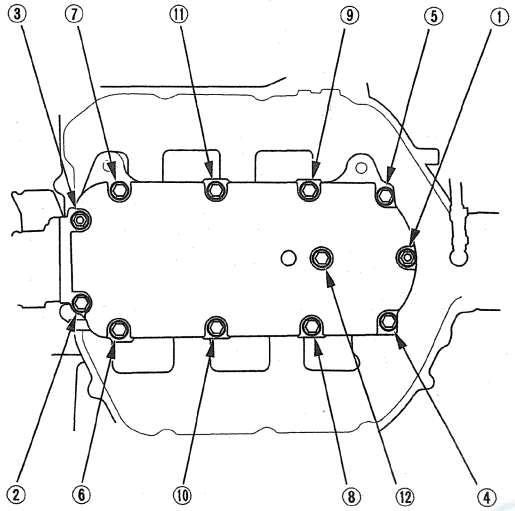

7. Remove the intake manifold mounting bolts and nuts sequentially in three steps, then remove the intake manifold.

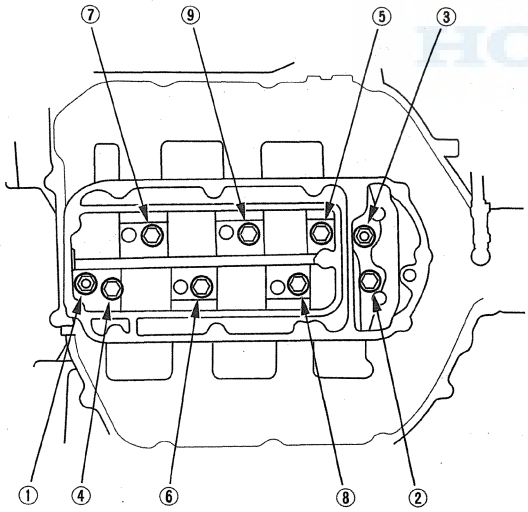

Installation

1. Install the intake manifold. Tighten the bolts and nuts sequentially in three steps. Always use a new intake manifold gasket.

Specified Torque
8 x 1.25 mm: 22 N·m (2.2 kgf·m, 16 lbf·ft)

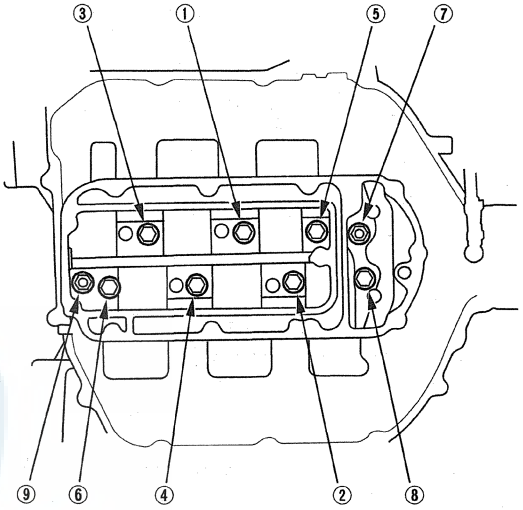

2. Install the upper cover. Tighten the bolts and nuts sequentially in three steps. Always use a new gasket.

Specified Torque
6 x 1.0 mm: 12 N·m (1.2 kgf·m, 8.8 lbf·ft)

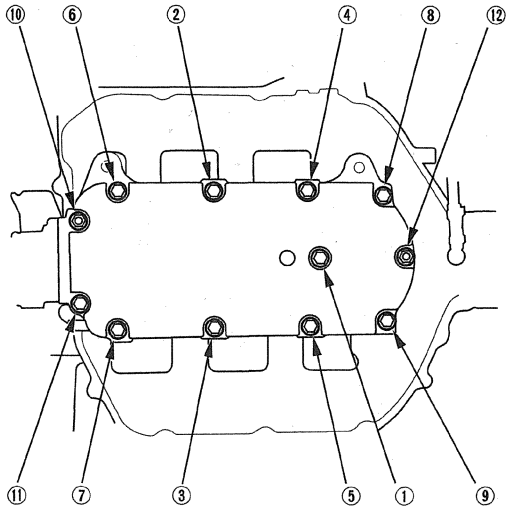

3. Install the PCV hose (A), and connect the IMT actuator connector (B).

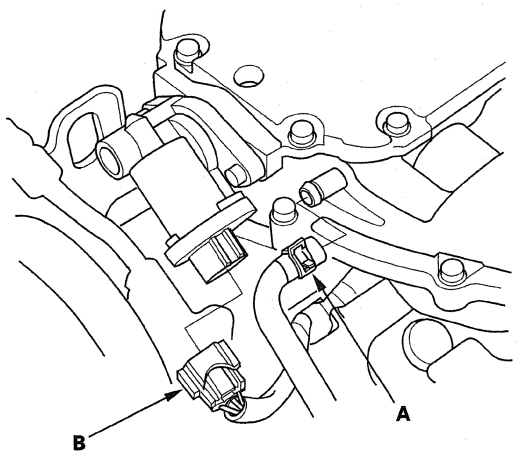

4. Connect the throttle actuator connector (A) and the EVAP canister purge valve connector (B), then install the water bypass hoses (C), the EVAP hose (D), the brake booster vacuum hose (E), and the vacuum hose (F).

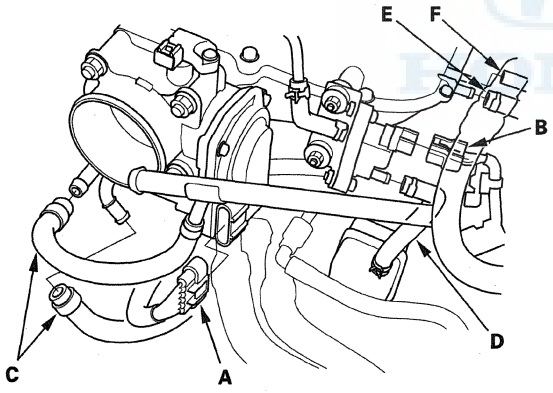

5. Install the intake air duct (A) and the breather pipe (B), then connect the MAP sensor connector (C).

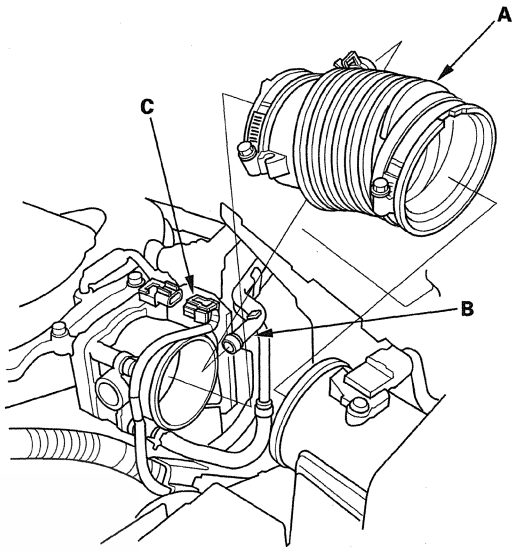

6. Clean up any spilled engine coolant.

7. After installation, check that all tubes, hoses, and connectors are installed correctly.

8. Install the engine cover.

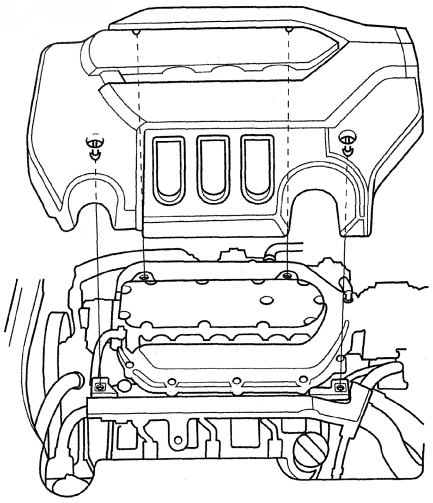

9. Refill the radiator with engine coolant, and bleed the air from the cooling system with the heater valve open (see step 8 on page 10-7).

Injector Base Removal and Installation

Removal

1. Relieve the fuel pressure (see page 11-332).
2. Remove the power steering (P/S) pump and the P/S hose clamp (see step 5 on page 6-34).
3. Remove the intake manifold (see page 9-3).
4. Remove the injectors (see page 11-223).
5. Remove the harness holder mounting bolt (A) and the knock sensor connector (B).

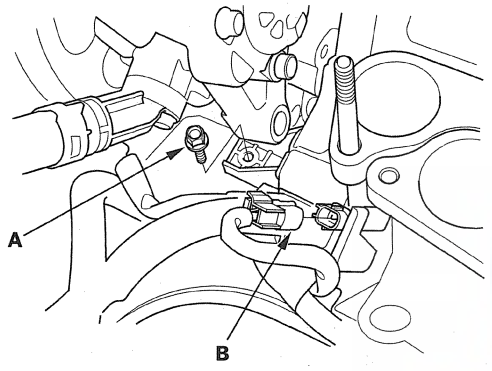

6. Remove the injector base mounting bolts/nuts (A), then remove the front injector base (B) and the rear injector base (C).

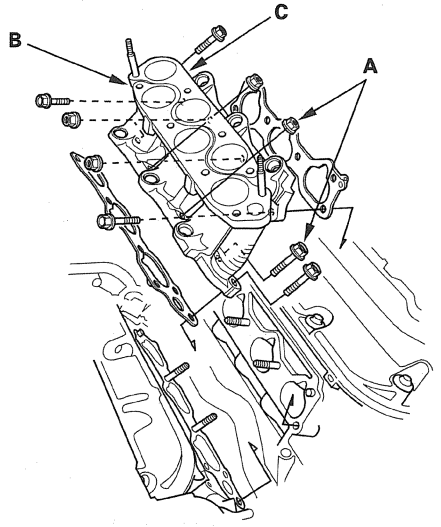

Installation

1. Install the front injector base (A) and the rear injector base (B) with new gaskets (C), and tighten the injector base mounting bolts/nuts (D) in a crisscross pattern in three steps, beginning with the inner nuts.

   NOTE: The front injector base gasket is different from the rear one. Do not mix injector base gasket types.

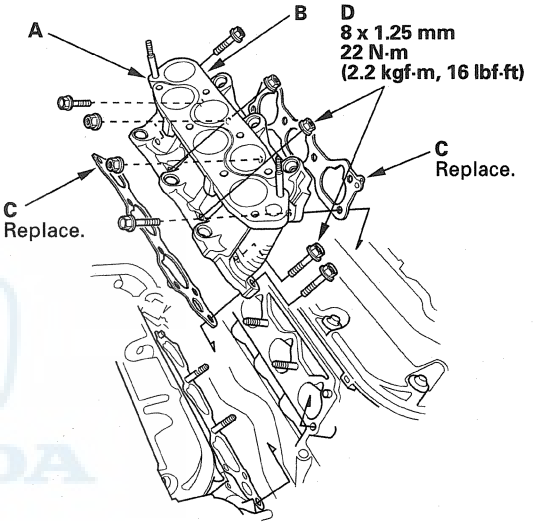

2. Connect the knock sensor connector (A), then install the harness holder mounting bolt (B).

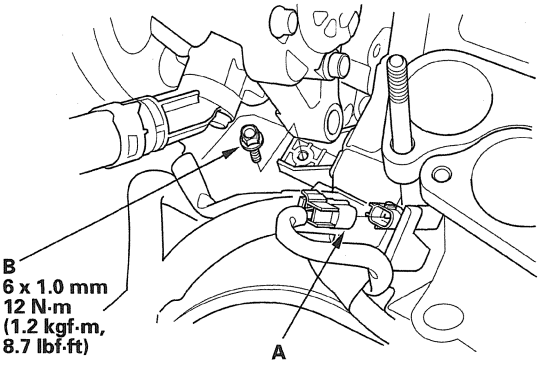

3. Install the injectors (see page 11-223).

4. Install the intake manifold (see page 9-4).

5. Install the P/S pump and the P/S hose clamp (see step 26 on page 6-62)

6. Inspect for fuel leaks. Turn the ignition switch to ON (II) (do not operate the starter) so the fuel pump runs for about 2 seconds and pressurizes the fuel line. Repeat this operation three times, then check for fuel leakage at any point in the fuel line.

HONDA

Exhaust Pipe and Muffler Replacement

NOTE: Use new gaskets and self-locking nuts when reassembling.

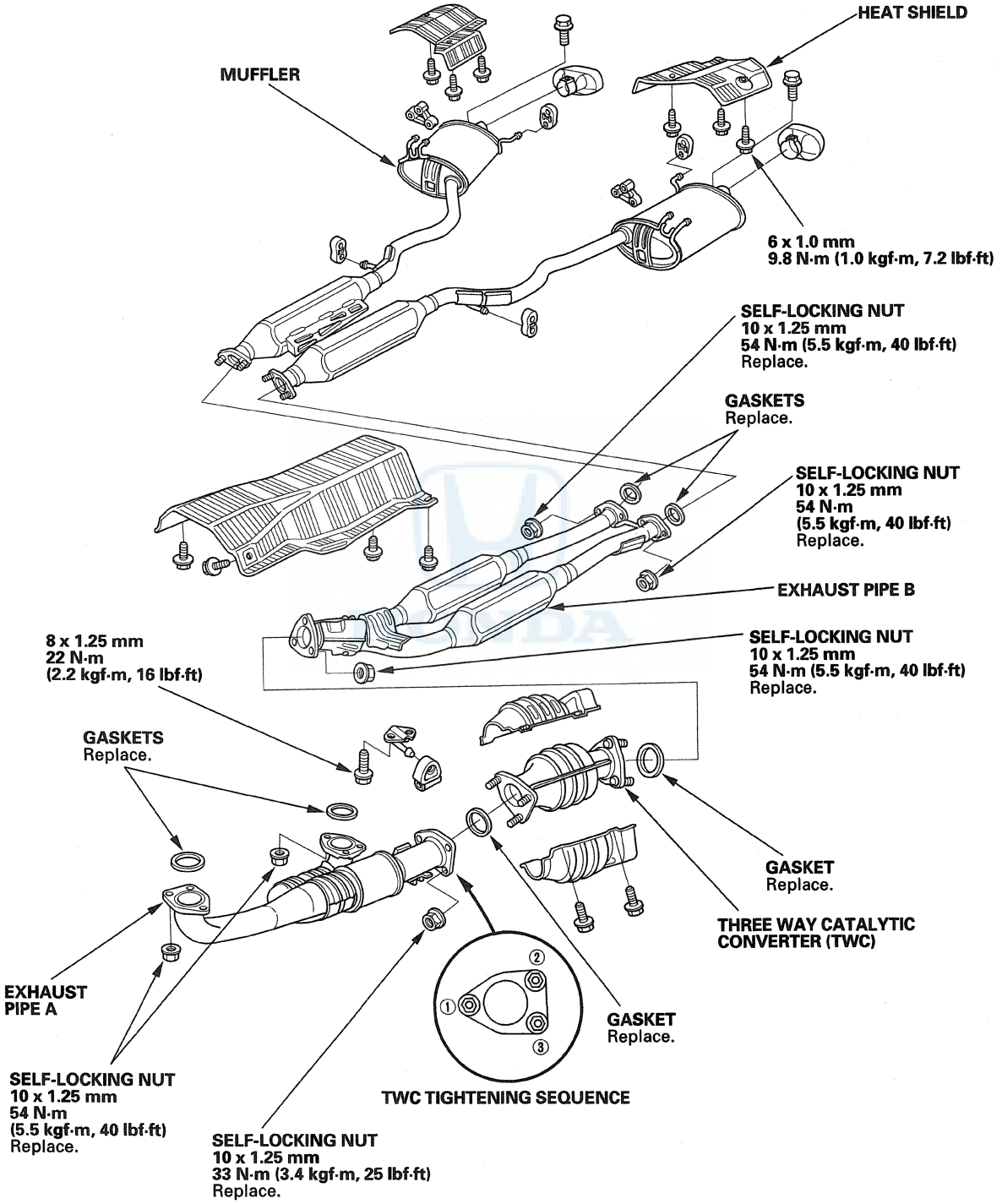

Engine Cooling

Cooling System

Component Location Index 10-2
Radiator Cap Test 10-3
Radiator Test 10-3
Fan Motor Test 10-4
Thermostat Test 10-4
Water Pump Inspection 10-5
Water Pump Replacement 10-5
Coolant Check 10-6
Coolant Replacement 10-6
Thermostat Replacement 10-8
Water Passage Replacement 10-9
Fan, Fan Motor, and Shroud Removal and Installation 10-11
Radiator Replacement 10-14

Fan Controls

Component Location Index 10-17
Symptom Troubleshooting Index 10-18
Circuit Diagram 10-19
Radiator Fan and A/C Condenser Fan Circuit Troubleshooting 10-20
Radiator Fan Circuit Troubleshooting (Open) 10-20
A/C Condenser Fan Circuit Troubleshooting (Open) 10-21
Radiator Fan Circuit Troubleshooting (Short) 10-21
A/C Condenser Fan Circuit Troubleshooting (Short) 10-22
RFC Unit Replacement 10-22

Component Location Index

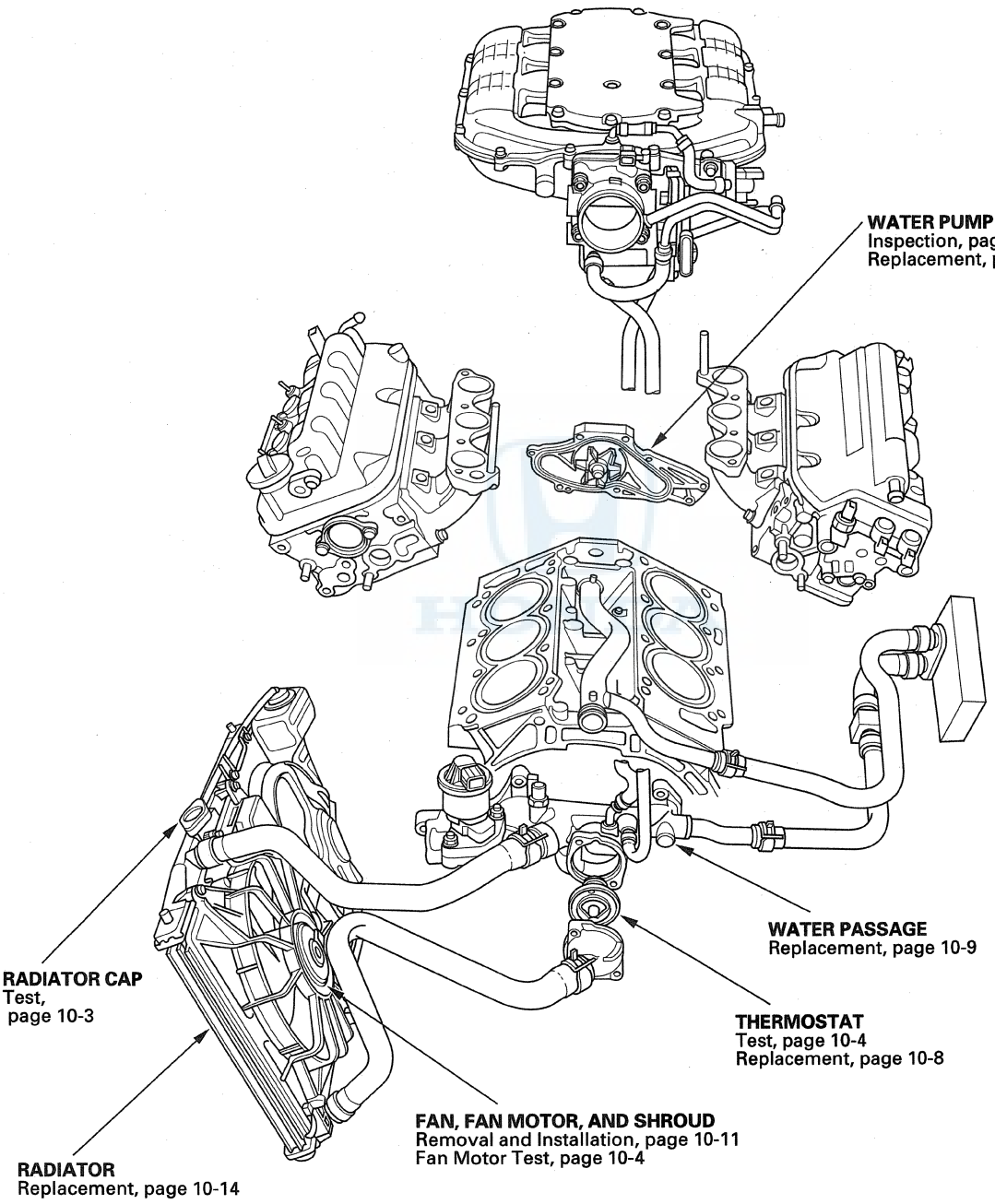

Radiator Cap Test

1. Wait until the engine is cool, then carefully remove the radiator cap (A). Wet the radiator cap seal with engine coolant, then install it on a commercially available pressure tester (B).

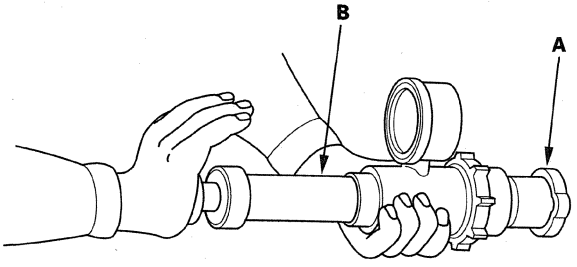

2. Apply a pressure of 93—123 kPa (0.95—1.25 kgf/cm^2, 14—18 psi).
3. Check for a drop in pressure.
4. If the pressure drops, replace the cap.

Radiator Test

1. Wait until the engine is cool, then carefully remove the radiator cap, and fill the radiator with engine coolant to the top of the filler neck.
2. Attach a commercially available pressure tester (A) to the radiator, and apply a pressure of 93—123 kPa (0.95—1.25 kgf/cm^2, 14—18 psi).

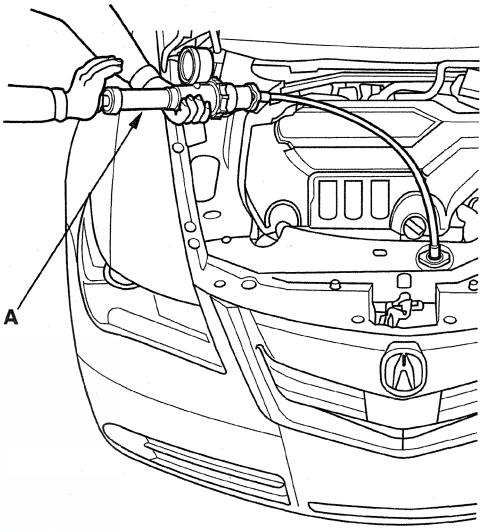

3. Inspect for engine coolant leaks and a drop in pressure.
4. Remove the tester, then reinstall the radiator cap.

Fan Motor Test

1. Disconnect the 2P connectors from the radiator fan motor (A) and the condenser fan motor (B).

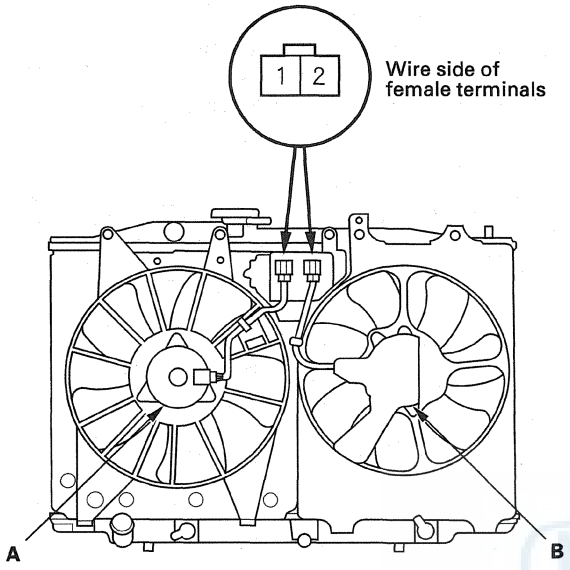

2. Test each motor by connecting battery power to terminal No. 1 and ground to terminal No. 2.

3. If either motor fails to run or does not run smoothly, replace it (see page 10-11).

Thermostat Test

Replace the thermostat if it is stuck in the open position at room temperature.

To test a closed thermostat:

1. Suspend the thermostat (A) in a container of water. Do not let the thermometer (B) touch the bottom of the hot container.

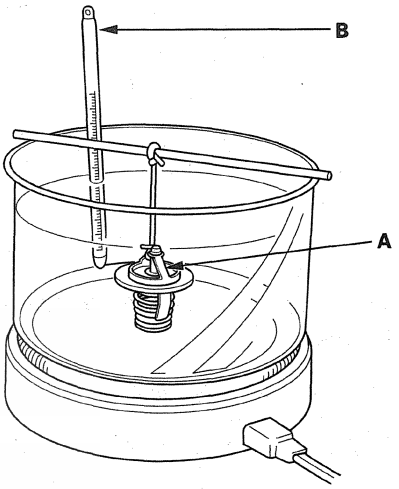

2. Heat the water and check the temperature with a thermometer. Check the temperature at which the thermostat first opens, and at which is fully open.

3. Measure the lift height of the thermostat when it is fully open.

Standard Thermostat

Lift Height:	**Above 10.0 mm (0.39 in)**
Starts Opening:	**169—176 °F (76—80 °C)**
Fully Open:	**194 °F (90 °C)**

Water Pump Inspection

1. Remove the timing belt (see page 6-16).
2. Turn the water pump counterclockwise, and make sure that it turns freely. If it doesn't, replace the water pump (see page 10-5).

   NOTE: When you check the water pump, you may see a small amount of "weeping" from the bleed holes (A). This is normal.

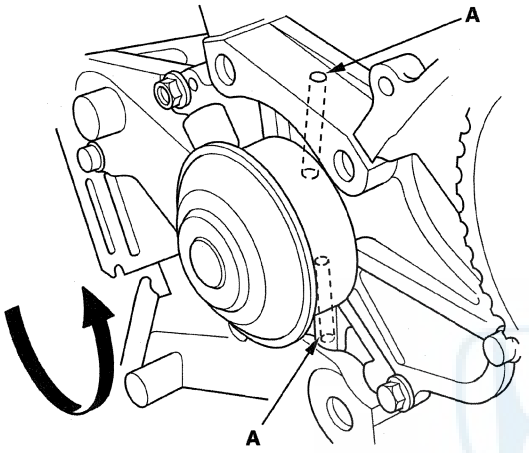

3. Install the timing belt (see page 6-18).

Water Pump Replacement

1. Drain the engine coolant (see page 10-6).
2. Remove the timing belt (see page 6-16).
3. Remove the timing belt adjuster (see page 6-28).
4. Remove the water pump (A) by removing the five bolts.

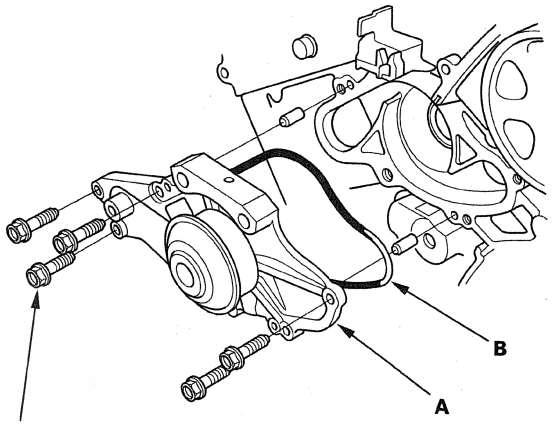

6 x 1.0 mm
12 N·m (1.2 kgf·m, 8.8 lbf·ft)

5. Inspect and clean the O-ring groove and the mating surface of the engine block.
6. Install the water pump with a new O-ring (B) in the reverse order of removal.
7. Clean up any spilled engine coolant.
8. Install the timing belt adjuster (see page 6-28).
9. Install the timing belt (see page 6-18).
10. Refill the radiator with engine coolant, then bleed the air from the cooling system (see step 8 on page 10-7).

Coolant Check

1. Check the coolant level in the coolant reservoir. Make sure it is between the MAX mark (A) and MIN mark (B).

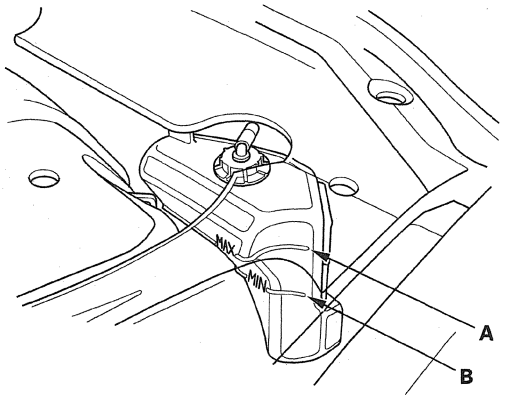

2. If the coolant level in the coolant reservoir is at or below the MIN mark, add coolant to bring it between the MIN and MAX marks, then inspect the cooling system for leaks.

Coolant Replacement

1. Start the engine. Set the heater temperature control dial to maximum heat, then turn the ignition switch to LOCK (0). Make sure the engine and the radiator are cool to the touch.
2. Remove the radiator cap.
3. Loosen the drain plug (A) and drain the coolant.

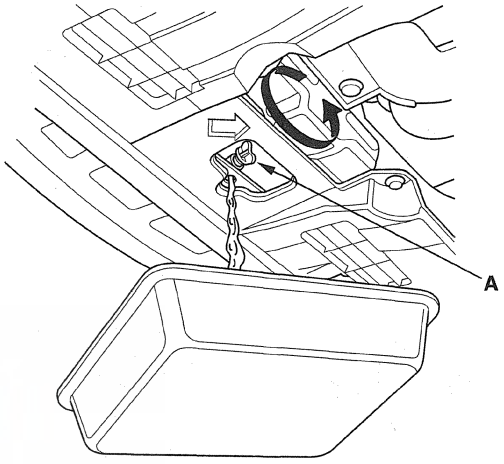

4. Install a rubber hose (A) on the drain bolt (B) located at the rear of the cylinder block, then loosen the drain bolt.

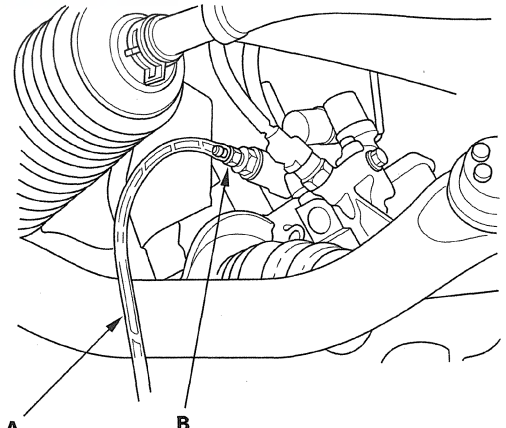

5. When the coolant stops draining, tighten the drain bolt. Remove the rubber hose.
6. Tighten the radiator drain plug securely.

7. Remove the coolant reservoir and drain the coolant, then reinstall the coolant reservoir.

8. Fill the coolant reservoir to the MAX mark (A) with Acura Long Life Antifreeze/Coolant Type 2 (P/N OL999-9011A).

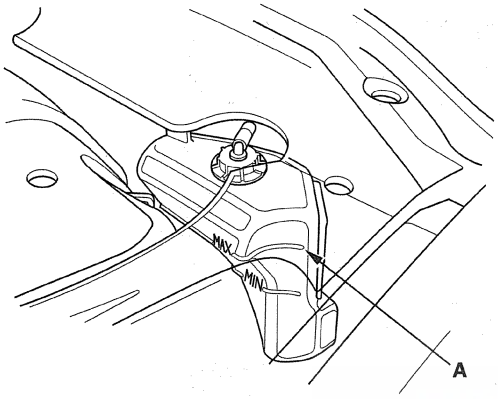

9. Pour Acura Long Life Antifreeze/Coolant Type 2 into the radiator up to the base of the filler neck.

   NOTE:
   - Always use Acura Long Life Antifreeze/Coolant Type 2 (P/N OL999-9011A). Using a non-Acura coolant can result in corrosion, causing the cooling system to malfunction or fail.
   - Acura Long Life Antifreeze/Coolant Type 2 is a mixture of 50 % antifreeze and 50 % water. Do not add water.

   Engine Coolant Capacities (Including the reserve tank capacity of 0.58 L (0.153 US gal)):
   After Coolant Change: 6.0 L (1.59 US gal)
   After Engine Overhaul: 8.6 L (2.27 US gal)

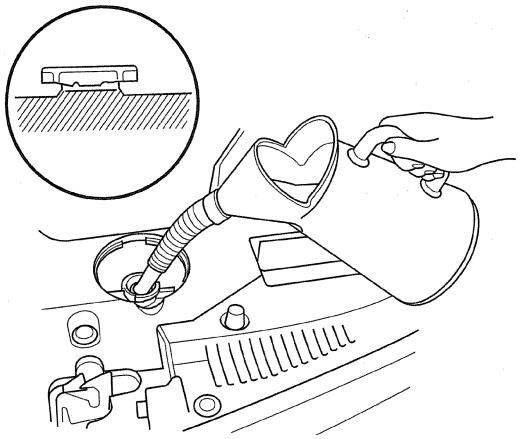

10. Install the radiator cap loosely.

11. Start the engine and let it run until it warms up (the radiator fan comes on at least twice).

12. Turn off the engine. Check the level in the radiator and add Acura Long Life Antifreeze/Coolant Type 2, if needed.

    NOTE: Removing the radiator cap while the engine is hot can cause the coolant to spray out. Always let the engine and the radiator cool before removing the cap.

13. Put the radiator cap on tightly, then run the engine again and check for leaks.

14. Clean up any spilled engine coolant.

15. Connect the Honda Diagnostic System (HDS) to the data link connector (DLC) (see step 2 on page 11-3).

16. Make sure the HDS communicates with the vehicle and the powertrain control module (PCM). If it doesn't communicate, troubleshoot the DLC circuit (see page 11-211).

17. Turn the ignition switch to ON (II).

18. Select BODY ELECTRICAL with the HDS.

19. Select ADJUSTMENT in the GAUGE MENU with the HDS.

20. Select RESET in the MAINTENANCE MINDER with the HDS.

21. Select MAINTENANCE SUB ITEM 5 RESET with the HDS.

Thermostat Replacement

1. Do the battery removal procedure (see page 22-92).
2. Drain the engine coolant (see page 10-6).
3. Remove the thermostat cover, then remove the thermostat.

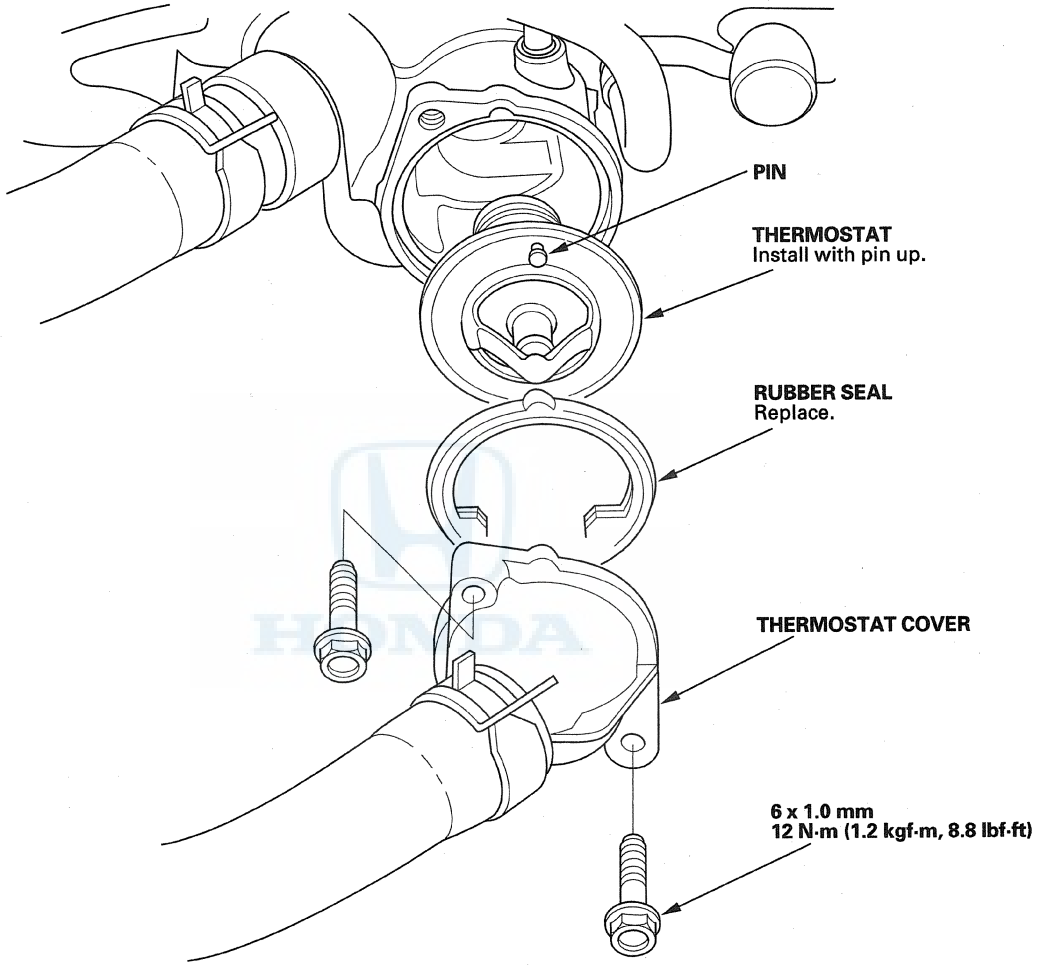

4. Install the thermostat with a new rubber seal and with the pin on the top side.
5. Do the battery installation procedure (see page 22-92).
6. Refill the radiator with engine coolant (see step 8 on page 10-7), then bleed the air from the cooling system.
7. Clean up any spilled engine coolant.

Water Passage Replacement

1. Do the battery removal procedure (see page 22-92).
2. Drain the engine coolant (see page 10-6).
3. Remove the upper radiator hose (A) and the lower radiator hose (B), then disconnect engine coolant temperature (ECT) sensor 1 connector (C) and the exhaust gas recirculation (EGR) valve connector (D).

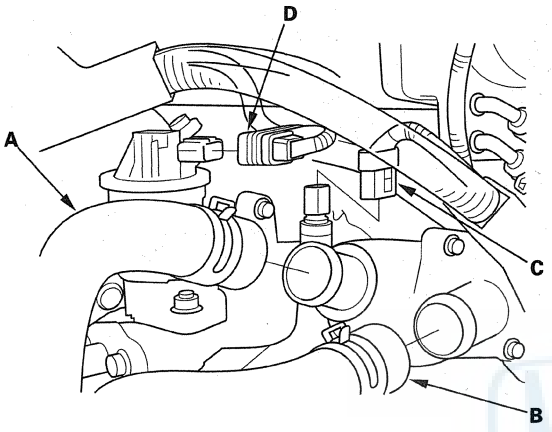

4. Remove the water bypass hoses (A) and the heater hoses (B).

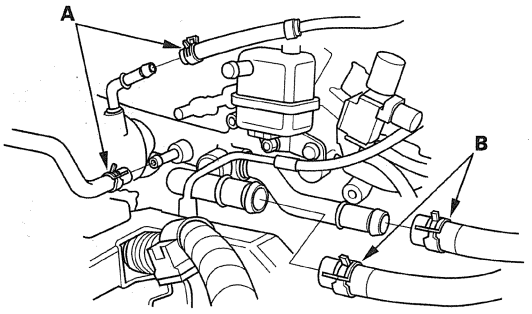

5. Remove the EGR pipe.

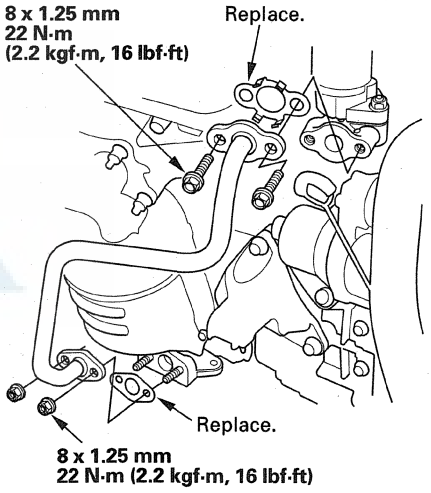

(cont'd)

Water Passage Replacement (cont'd)

6. Remove the water passage and related parts.

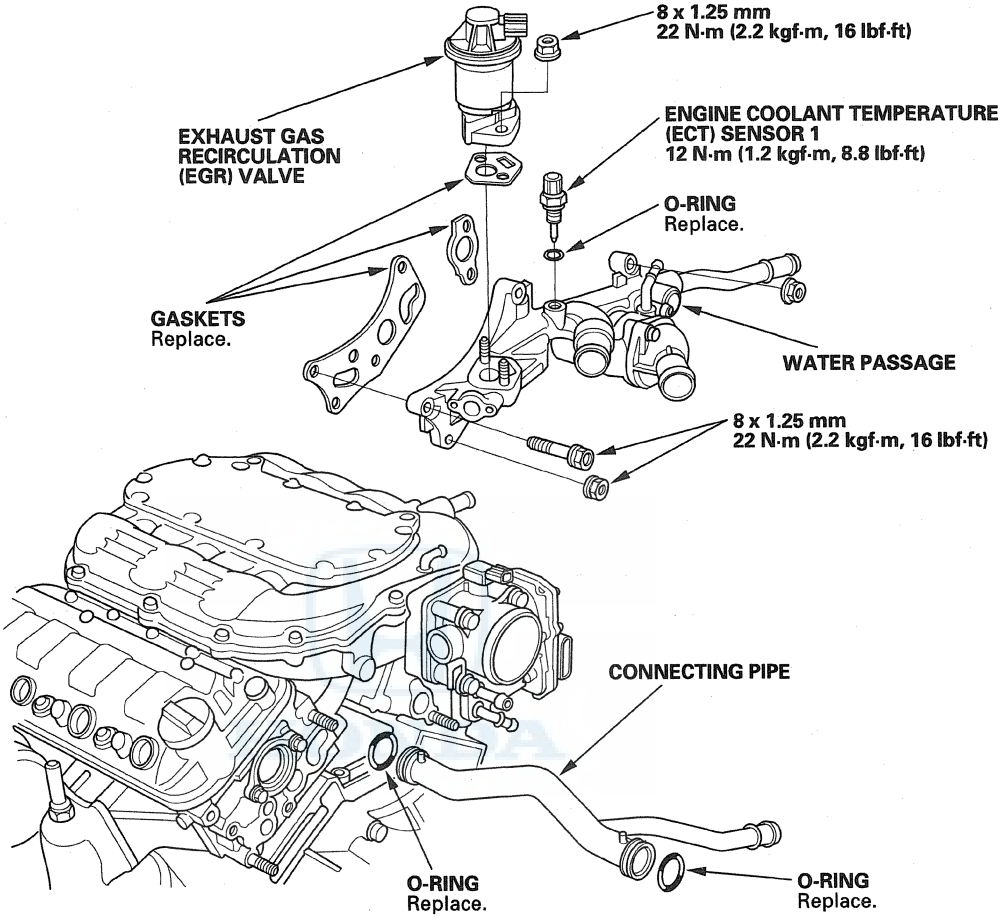

7. Install the water passage in the reverse order of the removal.
8. Do the battery installation procedure (see page 22-92).
9. Refill the radiator with engine coolant (see step 8 on page 10-7), and bleed the air from the cooling system with the heater valve open.
10. Clean up any spilled engine coolant.

Fan, Fan Motor, and Shroud Removal and Installation

Removal

1. Remove the right side fender trim (see page 20-162).
2. Raise the vehicle on the lift to full height.
3. Remove the splash shield (see step 31 on page 5-7).
4. Remove the harness connectors (A), the ground cable (B), and the harness clamps (C).

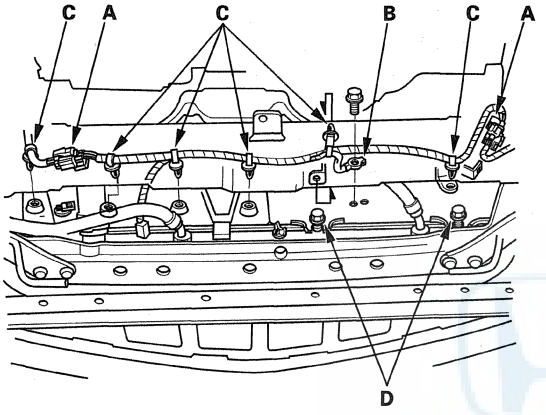

5. Loosen the A/C condenser fan shroud mounting bolts (D).
6. Lower the vehicle on the lift.
7. Remove the air intake duct cover (A) and the coolant reservoir (B).

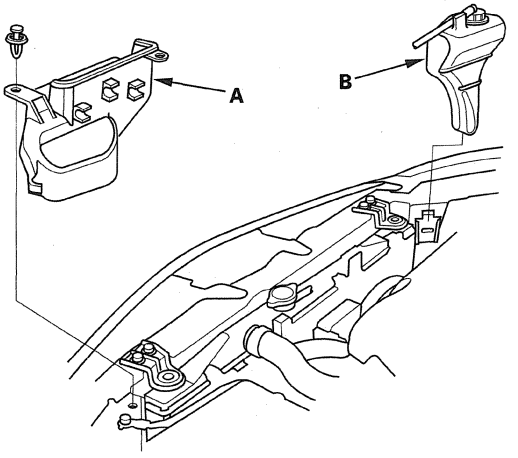

8. Disconnect the radiator fan control (RFC) connectors (A) and the A/C condenser fan motor connector (B), then remove the harness clamps (C).

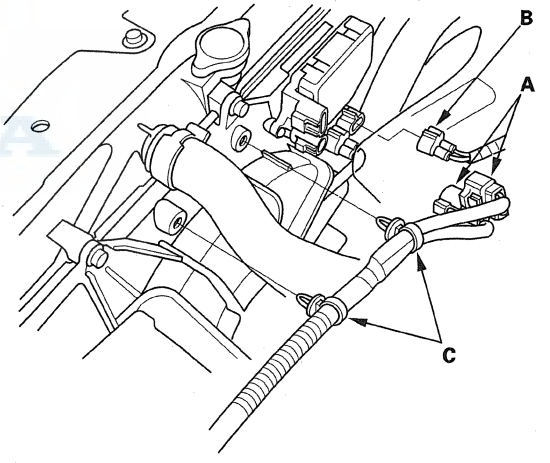

9. Remove the radiator fan control (RFC) unit (see page 10-22).

(cont'd)

Fan, Fan Motor, and Shroud Removal and Installation (cont'd)

10. Remove the condenser fan shroud assembly (A).

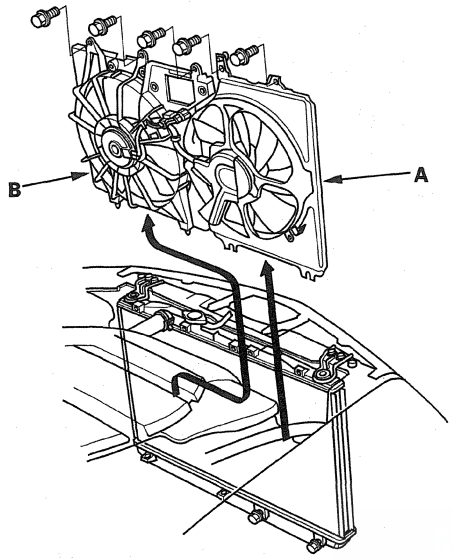

11. Remove the radiator fan shroud assembly (B) from right side of the engine compartment.

12. Disassemble the fan shrouds.

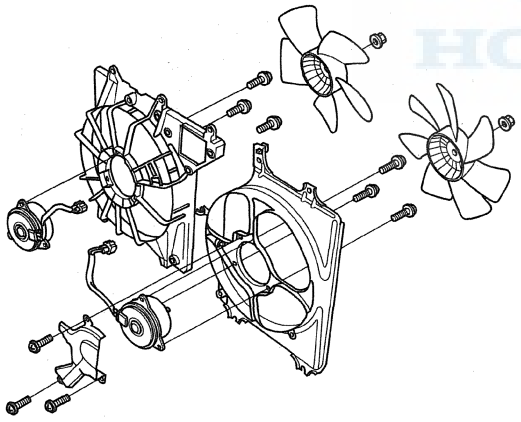

Installation

1. Assemble the fan shrouds.

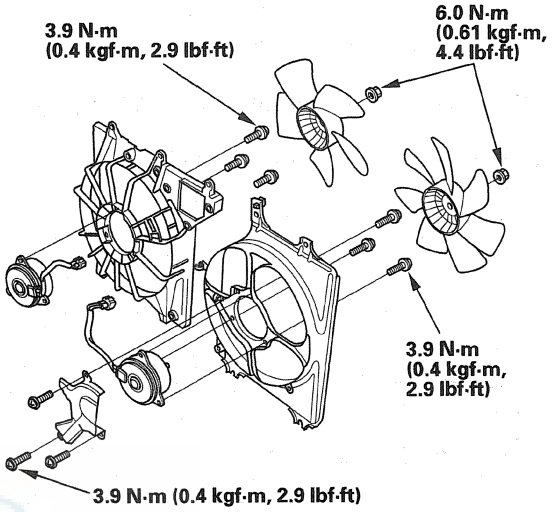

2. Install the radiator fan shroud assembly (A).

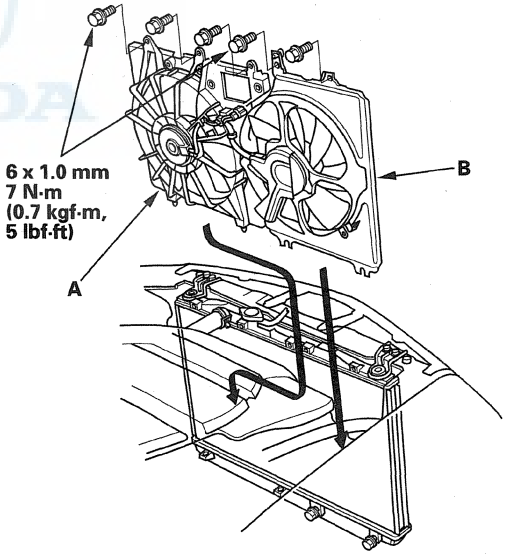

3. Install the condenser fan shroud assembly (B).

4. Install the RFC unit (see page 10-22).

5. Connect the RFC connectors (A) and the A/C condenser fan motor connector (B), then install the harness clamps (C).

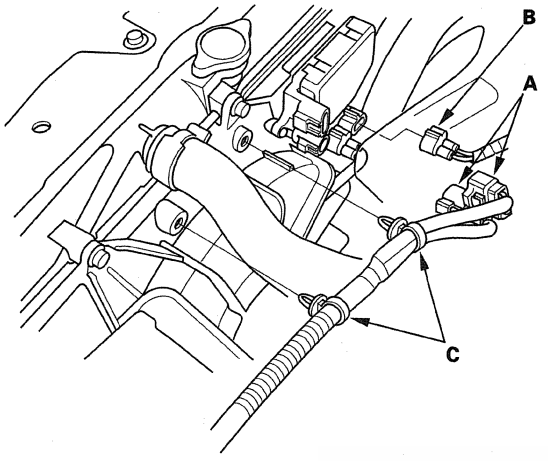

6. Install the coolant reservoir (A), and the air intake duct cover (B).

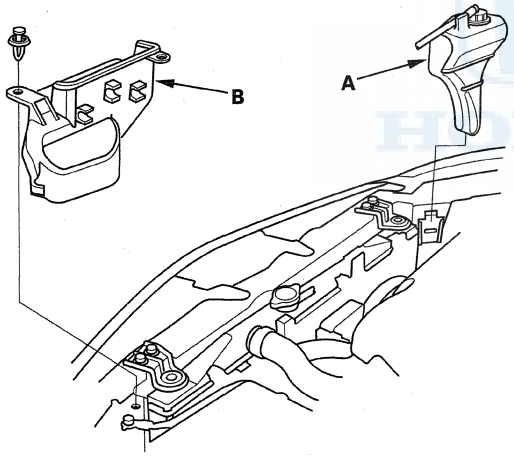

7. Raise the vehicle on the lift to full height.

8. Tighten the A/C condenser fan shroud mounting bolts (A).

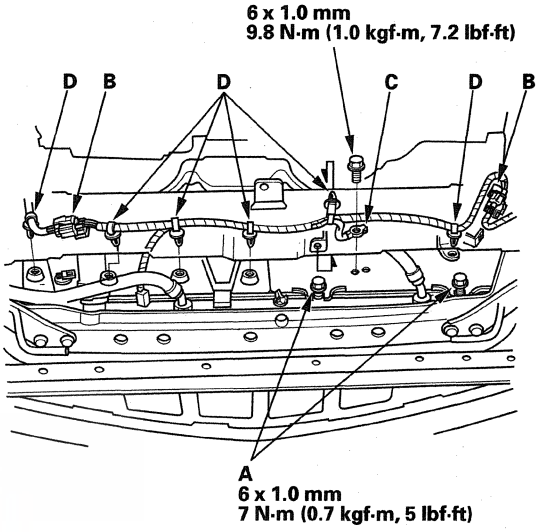

9. Install the harness connectors (B), the ground cable (C), and the harness clamps (D).

10. Install the splash shield (see step 39 on page 5-17).

11. Lower the vehicle on the lift.

12. Install the right side fender trim (see page 20-162).

Radiator Replacement

1. Drain the engine coolant (see page 10-6).
2. Remove the right side fender trim (see page 20-162).
3. Raise the vehicle on the lift to full height.
4. Remove the splash shield (see step 31 on page 5-7).
5. Disconnect the lower radiator hose (A).

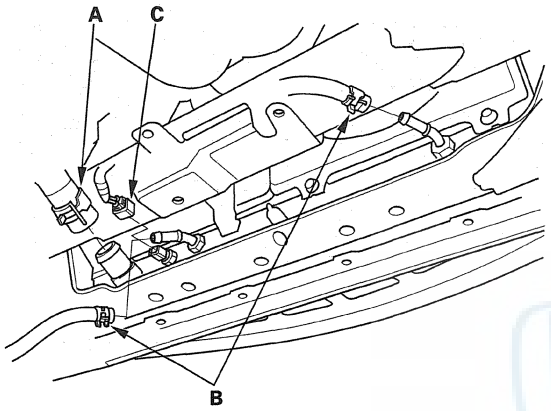

6. Disconnect the automatic transmission fluid (ATF) cooler hoses (B), then plug the hose and line.
7. Disconnect the engine coolant temperature (ECT) sensor 2 connector (C).
8. Lower the vehicle on the lift.
9. Disconnect the upper radiator hose (A) and the coolant reservoir hose (B).

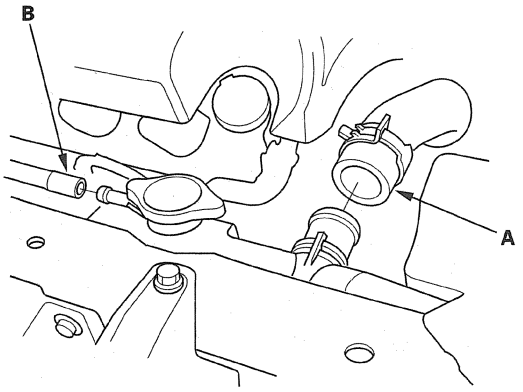

10. Remove the air intake duct cover (A), the coolant reservoir (B), and the radiator upper brackets (C).

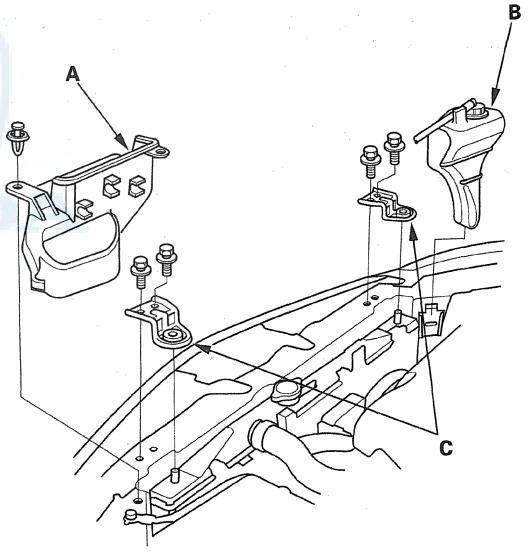

11. Remove the A/C condenser fan shroud assembly and the radiator fan shroud assembly (see page 10-11).

12. Pull up the radiator, then remove the radiator cap (A), the ETC sensor 2 (B), and the drain plug (C).

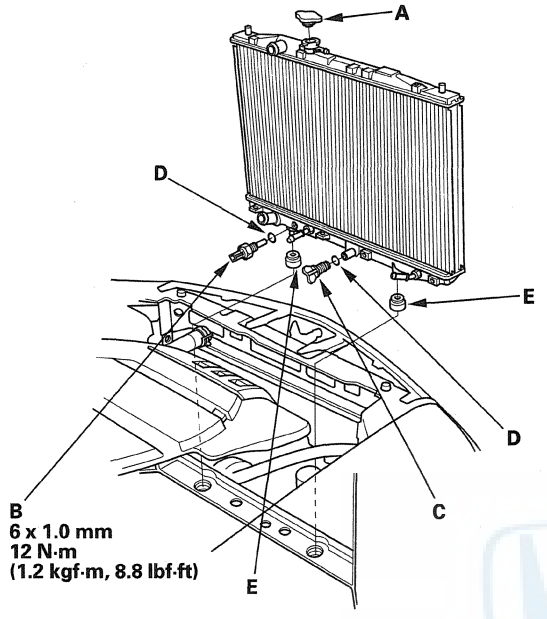

13. Reassemble the radiator with new O-rings (D).

14. Install the radiator. Make sure the lower cushions (E) are set securely.

15. Install the radiator fan shroud assembly and the A/C condenser fan shroud assembly (see page 10-12).

16. Install the radiator upper brackets (A), the coolant reservoir (B), and the air intake duct cover (C).

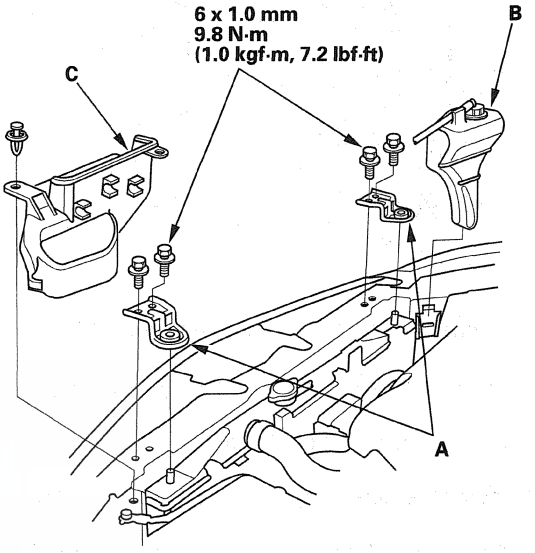

17. Install the upper radiator hose (A) and coolant reservoir hose (B).

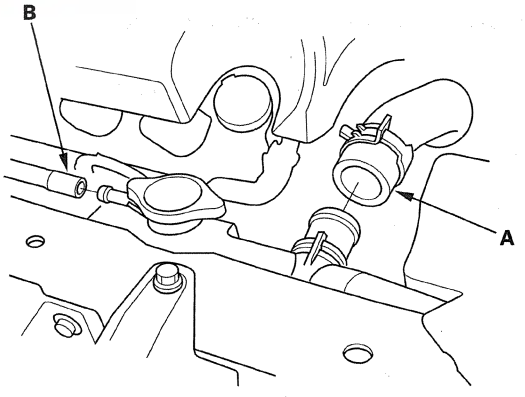

18. Lower the vehicle on the lift.

(cont'd)

Radiator Replacement (cont'd)

19. Install the lower radiator hose (A) and the ATF cooler hoses (B).

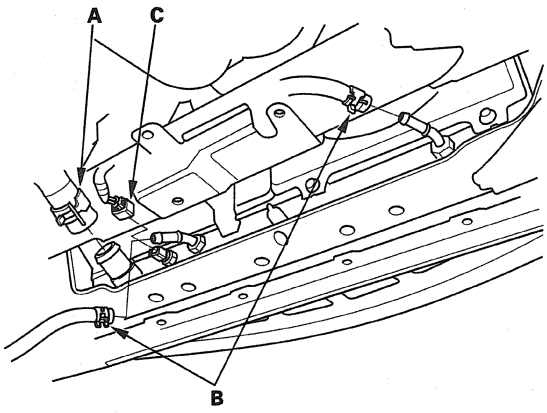

20. Connect the ECT sensor 2 connector (C).
21. Install the splash shield (see step 39 on page 5-17).
22. Lower the vehicle on the lift.
23. Install the right side fender trim (see page 20-162).
24. Refill the radiator with engine coolant, and bleed the air from the cooling system with the heater valve open (see step 8 on page 10-7).
25. Clean up any spilled engine coolant.

Component Location Index

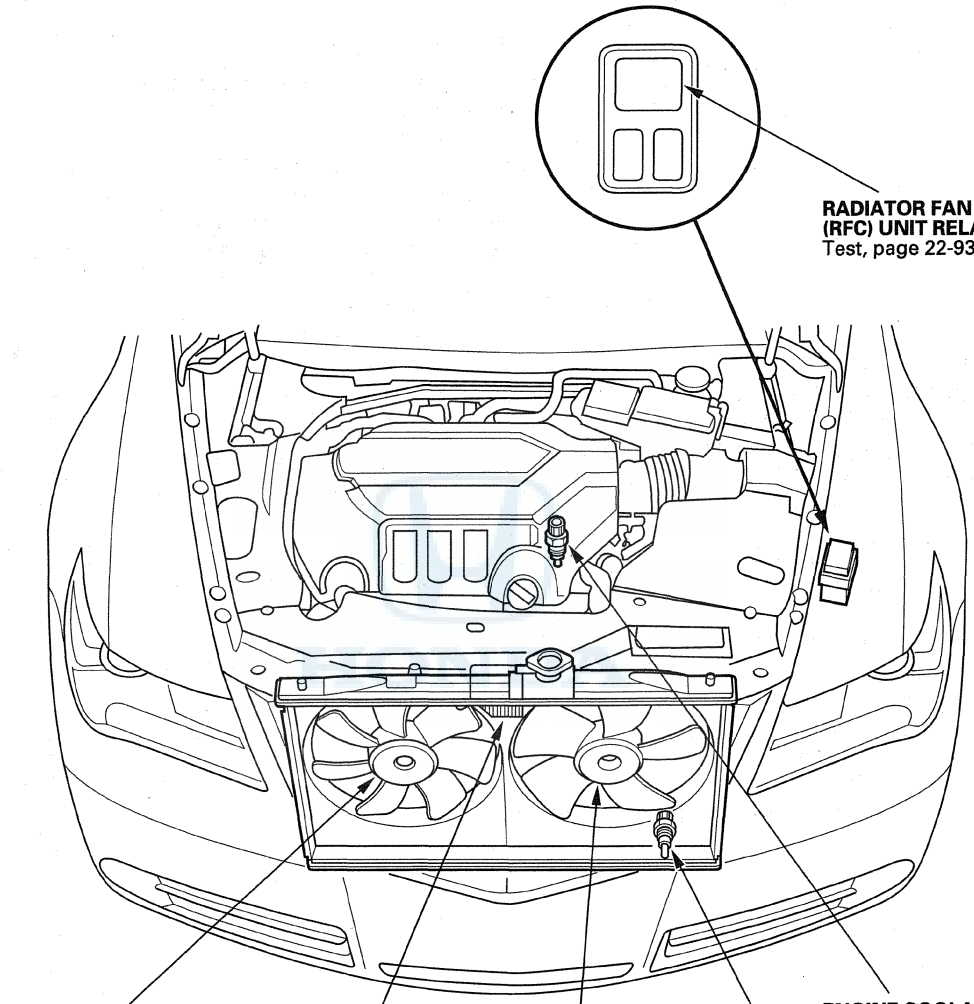

Symptom Troubleshooting Index

Symptom	Diagnostic Procedure	Also check for
Engine overheats	1. Check the coolant level. 2. Check for the coolant leakage (from gaskets, hoses, O-rings, etc.). 3. Check for dirt, leaves, or insects on radiator and condenser. 4. Check for deteriorated coolant. 5. Check for damaged or deformed fan shroud. 6. Inspect the fan motors (see page 10-4) or fan relay (see page 22-93). 7. Check the radiator cap (see page 10-3). 8. Check the thermostat (see page 10-4). 9. Inspect the water pump (see page 10-5). 10. Check for plugged or deteriorated radiator hoses. 11. Check for plugged heater core or hose(s). 12. Check for a damaged cylinder head gasket.	Proper radiator and condenser fan control and operation
Both the radiator fan and the A/C condenser fan do not run when the engine coolant temperature is above 207 °F (97 °C)	1. Check for PGM-FI DTCs. 2. Radiator fan and A/C condenser fan circuit troubleshooting (see page 10-20).	Cleanliness and tightness of all connectors
The A/C condenser fan runs, but the radiator fan does not run at all	1. Check for PGM-FI DTCs. 2. Radiator fan circuit troubleshooting (open) (see page 10-20).	Cleanliness and tightness of all connectors
The radiator fan runs, but the A/C condenser fan does not run at all	1. Check for PGM-FI DTCs. 2. A/C condenser fan circuit troubleshooting (open) (see page 10-21).	Cleanliness and tightness of all connectors
The radiator fan runs with the ignition switch in ON (II), the A/C off, and the engine coolant temperature below 201 °F (94 °C)	1. Check for PGM-FI DTCs. 2. Radiator fan circuit troubleshooting (Short) (see page 10-21).	Cleanliness and tightness of all connectors
The A/C condenser fan runs with the ignition switch in ON (II), the A/C off, and the engine coolant temperature below 201 °F (94 °C)	1. Check for PGM-FI DTCs. 2. A/C condenser fan circuit troubleshooting (Short) (see page 10-22).	Cleanliness and tightness of all connectors

Circuit Diagram

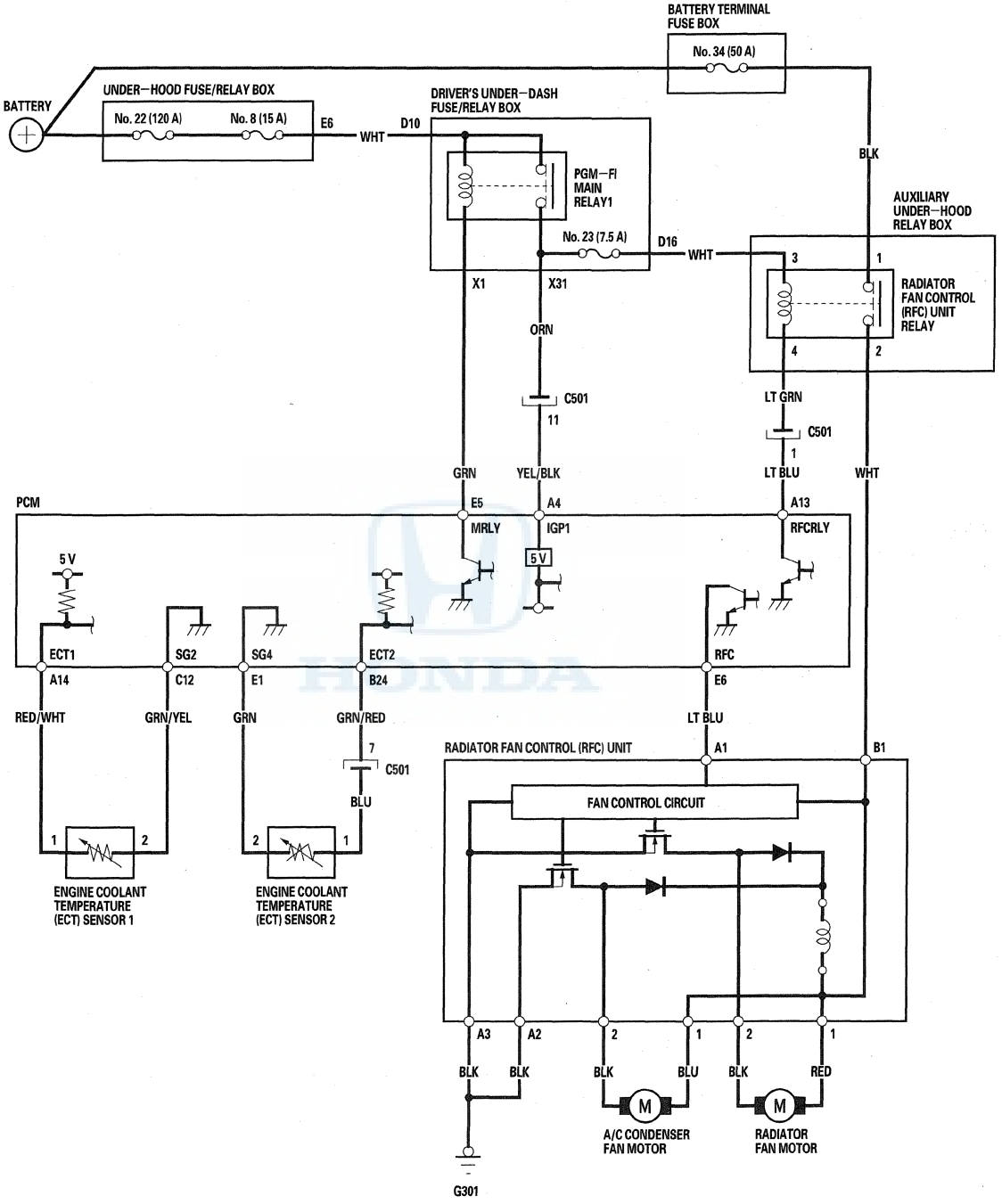

Radiator Fan and A/C Condenser Fan Circuit Troubleshooting

1. Connect the Honda Diagnostic System (HDS) to the data link connector (DLC) (see step 2 on page 11-3).
2. Turn the ignition switch to ON (II), and select the PGM-FI, INSPECTION, and then RADIATOR FAN on the HDS.

   Does the radiator fan and the A/C condenser fan run?

   YES—Fan circuit is OK. ■

   NO—Go to step 3.
3. Turn the ignition switch to LOCK (0).
4. Disconnect the radiator fan control (RFC) unit 3P connector.
5. Check for continuity between RFC unit 3P connector terminal No. 2 and body ground, then terminal No. 3 and body ground.

RFC UNIT 3P CONNECTOR

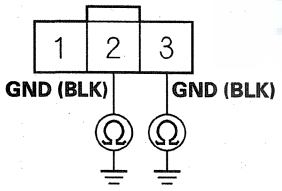

Wire side of female terminals

Is there continuity?

YES—Replace the RFC unit (see page 10-22). ■

NO—Check for an open in the wire between RFC unit 3P connector terminals No. 2, No. 3, and body ground. If the wire is OK, check for a poor ground at G301. ■

Radiator Fan Circuit Troubleshooting (Open)

1. Test the radiator fan motor (see page 10-4).

   Is the radiator fan motor OK?

   YES—Go to step 2.

   NO—Replace the radiator fan motor. ■
2. Disconnect the radiator fan control (RFC) unit 3P connector.
3. Check for continuity between RFC unit 3P connector terminal No. 2 and body ground.

RFC UNIT 3P CONNECTOR

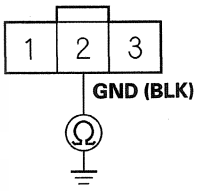

Wire side of female terminals

Is there continuity?

YES—Replace the RFC unit (see page 10-22). ■

NO—Check for an open in the wire between RFC unit 3P connector terminal No. 2 and body ground. If the wire is OK, check for a poor ground at G301. ■

A/C Condenser Fan Circuit Troubleshooting (Open)

1. Test the A/C condenser fan motor (see page 10-4).

   Is the A/C condenser fan motor OK?

   YES—Go to step 2.

   NO—Replace the A/C condenser fan motor. ■

2. Disconnect the radiator fan control (RFC) unit 3P connector.

3. Check for continuity between RFC unit 3P connector terminal No. 3 and body ground.

RFC UNIT 3P CONNECTOR

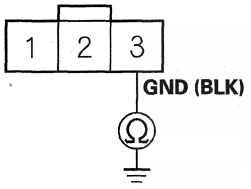

Wire side of female terminals

Is there continuity?

YES—Replace the RFC unit (see page 10-22). ■

NO—Check for an open in the wire between RFC unit 3P connector terminal No. 3 and body ground. If the wire is OK, check for a poor ground at G301. ■

Radiator Fan Circuit Troubleshooting (Short)

NOTE: A short in the radiator fan circuit causes the fan to run constantly whenever the ignition switch is ON (II).

1. Disconnect the radiator fan motor 2P connector from the radiator fan control (RFC) unit.

2. Check for continuity between radiator fan motor 2P connector terminal No. 2 and body ground.

RADIATOR FAN MOTOR 2P CONNECTOR

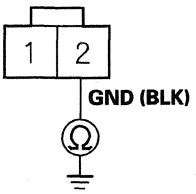

Wire side of female terminals

Is there continuity?

YES—Repair a short in the wire between radiator fan motor 2P connector terminal No. 2 and body ground. ■

NO—Replace the RFC unit (see page 10-22). ■

A/C Condenser Fan Circuit Troubleshooting (Short)

NOTE: A short in the A/C condenser fan circuit causes the fan to run constantly whenever the ignition switch is ON (II).

1. Disconnect the A/C condenser fan motor 2P connector from the radiator fan control (RFC) unit.
2. Check for continuity between A/C condenser fan motor 2P connector terminal No. 2 and body ground.

A/C CONDENSER FAN MOTOR 2P CONNECTOR

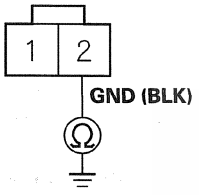

Wire side of female terminals

Is there continuity?

YES—Repair a short in the wire between A/C condenser fan motor 2P connector terminal No. 2 and body ground. ■

NO—Replace the RFC unit (see page 10-22). ■

RFC Unit Replacement

1. Remove the grille cover (see page 20-163).
2. Disconnect the connectors from the radiator fan control (RFC) unit, then remove the RFC unit.

   NOTE: When removing the RFC unit mounting screws take care not to damage the screw heads.

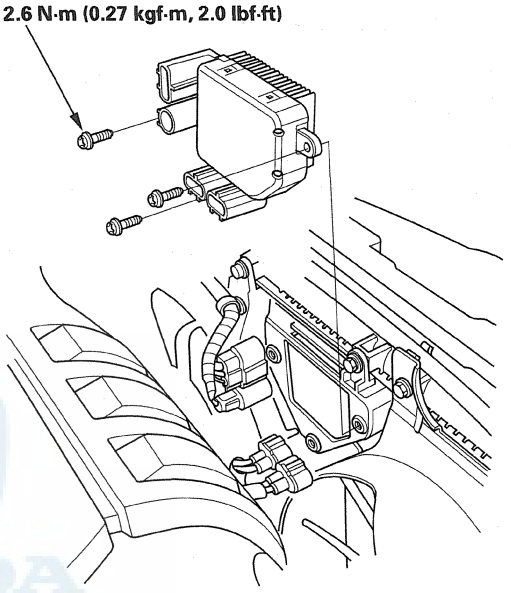

3. Install the RFC unit in the reverse order of removal.

Fuel and Emissions

Fuel and Emissions Systems
Special Tools 11-2
General Troubleshooting Information 11-3
DTC Troubleshooting Index 11-9
Symptom Troubleshooting Index 11-13
System Description
Fuel and Emissions Systems Diagram 11-15
Electronic Control Systems 11-17
PGM-FI System 11-48
Electronic Throttle Control System 11-52
VTEC 11-54
Idle Control System 11-57
Fuel Supply System 11-57
Intake Air System 11-58
Catalytic Converter System 11-59
EGR System 11-59
PCV System 11-61
EVAP Control System 11-62
How to Set Readiness Codes 11-65

PGM-FI System
Component Location Index 11-68
DTC Troubleshooting 11-70
F-CAN Circuit Troubleshooting 11-192
MIL Circuit Troubleshooting 11-210
DLC Circuit Troubleshooting 11-211
Injector Replacement 11-223
MAP Sensor Replacement 11-225
MAF Sensor/IAT Sensor Replacement 11-225
ECT Sensor 1 Replacement 11-226
ECT Sensor 2 Replacement 11-226
A/F Sensor Replacement 11-227
Secondary HO2S Replacement 11-228
CKP Sensor Replacement 11-229
CMP Sensor Replacement 11-229
Knock Sensor Replacement 11-230
PCM Update 11-230
PCM Replacement 11-232

Electronic Throttle Control System
Component Location Index 11-234
DTC Troubleshooting 11-236
APP Sensor Signal Inspection 11-281
Accelerator Pedal Module Removal/Installation 11-282
Throttle Actuator Control Module Replacement 11-282

VTEC
Component Location Index 11-284
DTC Troubleshooting 11-285
Rocker Arm Oil Control Solenoid Replacement 11-294
Rocker Arm Oil Pressure Switch Removal/Installation 11-294

Radiator Fan Control (RFC) System
Component Location Index 11-295
DTC Troubleshooting 11-296

Idle Control System
Component Location Index 11-303
DTC Troubleshooting 11-304
A/C Signal Circuit Troubleshooting 11-307
Alternator FR Signal Circuit Troubleshooting 11-308
PSP Switch Signal Circuit Troubleshooting 11-308
Brake Pedal Position Switch Signal Circuit Troubleshooting 11-311
Idle Speed Inspection 11-312
PCM Idle Learn Procedure 11-313

Fuel Supply System
Component Location Index 11-314
DTC Troubleshooting 11-316
Fuel Pressure Relieving 11-332
Fuel Pressure Test 11-335
Transfer Fuel Pump Test 11-336
Fuel Tank Draining 11-337
Fuel Line Inspection 11-338
Fuel Line/Quick-Connect Fitting Precautions 11-340
Fuel Line/Quick-Connect Fitting Removal 11-341
Fuel Line/Quick-Connect Fitting Installation 11-344
Fuel Tank Unit Removal and Installation 11-347
Fuel Pressure Regulator Replacement 11-348
Fuel Filter Replacement 11-348
Fuel Pump/Fuel Gauge Sending Unit Replacement 11-349
Fuel Pump Control Module Replacement 11-349
Secondary Fuel Gauge Sending Unit Replacement 11-350
Fuel Tank Replacement 11-351
Fuel Fill Pipe Removal/Installation 11-353
Fuel Gauge Sending Unit Test 11-353
Secondary Fuel Gauge Sending Unit Test 11-354
Low Fuel Indicator Test 11-355

Intake Air System
Component Location Index 11-356
DTC Troubleshooting 11-357
Throttle Body Test 11-365
Throttle Body Cleaning 11-366
Air Cleaner Removal/Installation 11-366
Air Cleaner Element Inspection/Replacement 11-367
Intake Air Resonator Removal/Installation 11-367
IMT Actuator Replacement 11-368
Throttle Body Removal/Installation 11-369

Catalytic Converter System
Component Location Index 11-370
DTC Troubleshooting 11-371
Warm Up TWC Removal/Installation 11-373

EGR System
Component Location Index 11-375
DTC Troubleshooting 11-376
EGR Valve Replacement 11-388
EGR Pipe Removal and Installation 11-388

PCV System
Component Location Index 11-390
DTC Troubleshooting 11-391
PCV Valve Inspection 11-392
PCV Valve Replacement 11-392

EVAP System
Component Location Index 11-393
DTC Troubleshooting 11-395
Fuel Cap Warning Message System Troubleshooting 11-421
EVAP Canister Replacement 11-422
FTP Sensor Replacement 11-423
EVAP Canister Purge Valve Replacement 11-423
EVAP Canister Vent Shut Valve Replacement 11-424
EVAP Canister Filter Replacement 11-424



Special Tools

Ref. No.	Tool Number	Description	Qty
①	07AAJ-S6MA150	Fuel Pressure Gauge Attachment Set	1
②	07JAZ-001000B	Vacuum/Pressure Gauge, 0—4 in.Hg	1
③	07NAJ-P07010A	Pressure Gauge Adapter	1
④	07SAZ-001000A	Backprobe Set	2
⑤	07ZAJ-S5AA200	Oil Pressure Hose	1
⑥-1	07406-0070301	A/T Low Pressure Gauge W/Panel	1
⑥-2	07MAJ-PY4011A	A/T Pressure Hose, 2,210 mm	1
⑥-3	07MAJ-PY40120	A/T Pressure Hose, Adapter	1
⑦	07406-004000B	Fuel Pressure Gauge	1

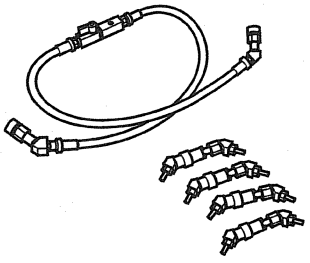

①

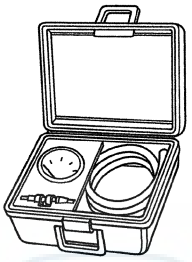

②

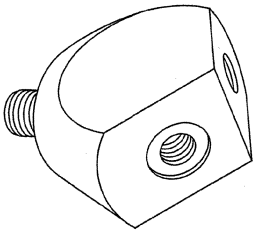

③

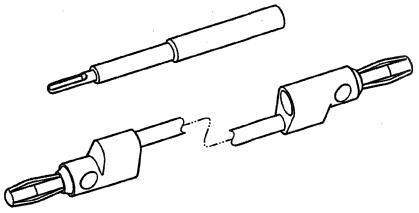

④

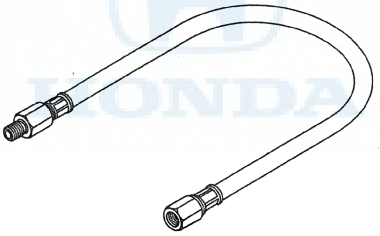

⑤

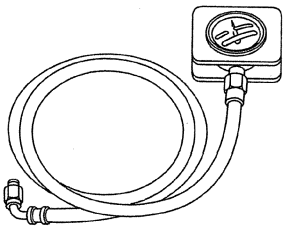

⑥-1, ⑥-2, ⑥-3



⑦

General Troubleshooting Information

Intermittent Failures

The term intermittent failure means a system may have had a failure, but it checks OK now. If the malfunction indicator lamp (MIL) on the dash does not come on, check for poor connections or loose terminals at all connectors related to the circuit that you are troubleshooting. If the MIL was on but then went out, the original problem may have been intermittent.

Service Information

Periodically, new PCM software or new service procedures may become available. Always check online for the latest software or service information related to the DTCs or symptoms you are troubleshooting.

Opens and Shorts

Open and short are common electrical terms. An open is a break in a wire or at a connection. A short is an accidental connection of a wire to ground or to another wire. In simple terms, this usually means something won't work at all. With complex electronics (such as PCMs) this can sometimes mean something works, but not the way it's supposed to.

How to Use the HDS (Honda Diagnostic System)

If the MIL (malfunction indicator lamp) has come on

1. Start the engine, and check the MIL (A).

   NOTE: If the ignition switch is turned to ON (II), and the engine is not started, the MIL stays on for 15—20 seconds (see page 11-65).

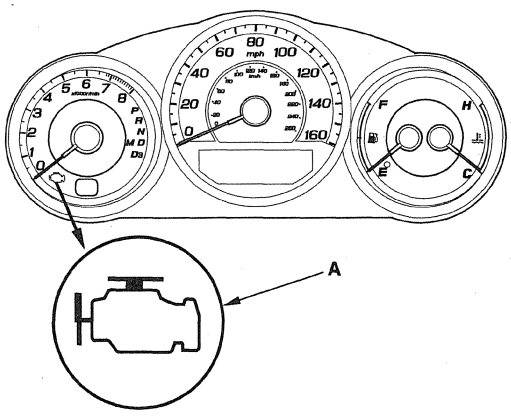

2. If the MIL stays on, connect the HDS to the data link connector (DLC) (A) located under the driver's side of the dashboard.

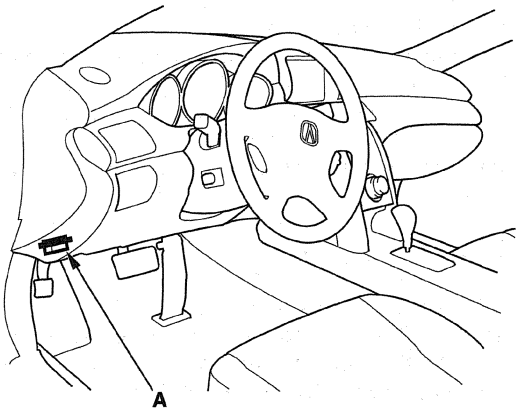

3. Turn the ignition switch to ON (II).

4. Make sure the HDS communicates with the PCM and other vehicle systems. If it doesn't, go to DLC circuit troubleshooting (see page 11-211).

5. Check the diagnostic trouble code (DTC) and note it. Also check the freeze data and/or on-board snapshot data, and download any data found. Then refer to the indicated DTC's troubleshooting, and begin the appropriate troubleshooting procedure.

   NOTE:
   - Freeze data indicates the engine conditions when the first malfunction, misfire, or fuel trim malfunction that activated the MIL was detected.
   - The HDS can read the DTCs, the freeze data, the on-board snapshot, the current data, and other powertrain control module (PCM) data.
   - For specific operations, refer to the user's manual that came with the HDS.

6. If no DTCs are found, go to the MIL circuit troubleshooting (see page 11-210).

(cont'd)

General Troubleshooting Information (cont'd)

If the MIL did not stay on
If the MIL did not stay on but there is a driveability problem, do the symptom troubleshooting.

If you can't duplicate the DTC
Some of the troubleshooting requires you to reset the PCM and try to duplicate the DTC. If the problem is intermittent and you can't duplicate the DTC, do not continue through the procedure. To do so will only result in confusion and possibly, a needlessly replaced PCM.

HDS Clear Command

The PCM stores various specific data to backup the system even if there is no electrical power, such as when the battery negative terminal or the No. 8 FI ECU (PCM) (15 A) fuse are disconnected. Stored data based on failed parts should be cleared by using the CLEAR COMMAND of the HDS, if parts are replaced.

The HDS has three kinds of clear commands to meet this purpose. They are DTC clear, PCM reset, and CKP pattern clear. The DTC clear command erases all stored DTC codes, freeze data, on-board snapshot, and readiness codes. This must be done with the HDS after reproducing the DTC during troubleshooting.
The PCM reset command erases all stored DTCs, freeze data, on-board snapshot, readiness codes, and all specific data to correct the system except CKP pattern. If the CKP pattern data in the PCM was cleared, you must do the CKP pattern learn procedure. The CKP pattern clear command erases only CKP pattern data. This command is for repair of a misfire or the CKP sensor.

Scan Tool Clear Command

If you are using a generic scan tool to clear commands, be aware that there is only one setting for clearing the PCM, and it clears all commands at the same time (CKP pattern learn, idle learn, readiness codes, freeze data, on-board snapshot, and DTCs). After you clear all commands, you then need to do these procedures, in this order: PCM idle learn (see page 11-313); CKP pattern learn; test-drive to set readiness codes to complete (see page 11-65).

DTC Clear

1. Clear the DTC with the HDS while the engine is stopped.
2. Turn the ignition switch to LOCK (0).
3. Turn the ignition switch to ON (II), and wait 30 seconds.
4. Turn the ignition switch to LOCK (0), and disconnect the HDS from the DLC.

PCM Reset

1. Reset the PCM with the HDS while the engine is stopped.
2. Turn the ignition switch to LOCK (0).
3. Turn the ignition switch to ON (II), and wait 30 seconds.
4. Turn the ignition switch to LOCK (0), and disconnect the HDS from the DLC.
5. Do the PCM idle learn procedure (see page 11-313).

CKP Pattern Clear/CKP Pattern Learn

Clear/Learn Procedure (with the HDS)

1. Connect the HDS to the data link connector (DLC) (A) located under the driver's side of the dashboard.

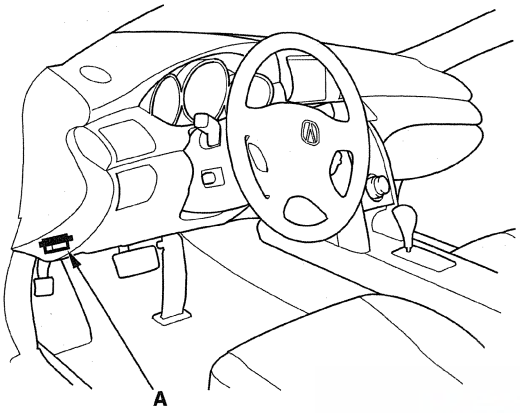

2. Turn the ignition switch to ON (II).
3. Make sure the HDS communicates with the PCM and other vehicle systems. If it doesn't, go to the DLC circuit troubleshooting (see page 11-211).
4. Select CRANK PATTERN in the ADJUSTMENT MENU with the HDS.
5. Select CRANK (CKP) PATTERN CLEAR, and clear the CKP pattern.
6. Select CRANK PATTERN LEARNING with the HDS, and follow the screen prompts.

Learn Procedure (without the HDS)

1. Start the engine. Hold the engine speed at 3,000 rpm without load (in P or N) until the radiator fan comes on.
2. Test-drive the vehicle on a level road: Decelerate (with the throttle fully closed) from an engine speed of 2,500 rpm down to 1,000 rpm with the transmission in 2.
3. Test-drive the vehicle on a level road: Decelerate (with the throttle fully closed) from an engine speed of 5,000 rpm down to 3,000 rpm with the transmission in 2.
4. Repeat step 2 and 3 several times.
5. Turn the ignition switch to LOCK (0).
6. Turn the ignition switch to ON (II), and wait 30 seconds.

How to End a Troubleshooting Session (required after any troubleshooting)

1. Reset the PCM with the HDS.
2. Do the PCM idle learn procedure (see page 11-313).
3. Turn the ignition switch to LOCK (0).
4. Disconnect the HDS from the DLC.

NOTE: The PCM is part of the immobilizer system. If you replace the PCM, it will have a different immobilizer code. For the engine to start, you must rewrite the immobilizer code with the HDS.

(cont'd)

General Troubleshooting Information (cont'd)

How to Troubleshoot Circuits at the PCM Connectors

Special Tools Required
- Digital multimeter KS-AHM-32-003 (1) or a commercially available digital multimeter
- Backprobe set 07SAZ-001000A (2)

NOTE: The PCM overwrites data and monitors the EVAP system for up to 40 minutes after the ignition switch is turned to LOCK (0). Jumping the SCS line after turning the ignition switch to LOCK (0) cancels this function. Disconnecting the PCM during this function, without jumping the SCS line first, can damage the PCM.

1. Connect the backprobe adapters (A) to the stacking patch cords (B), and connect the cords to a digital multimeter (C).

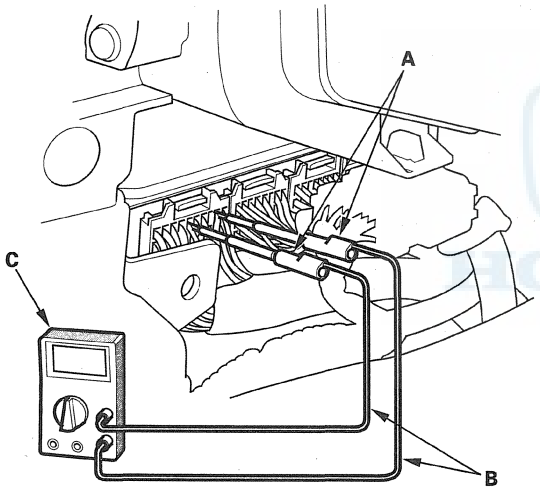

2. Using the wire insulation as a guide for the contoured tip of the backprobe adapter, gently slide the tip into the connector from the wire side until it touches the end of the wire terminal.

3. If you cannot get to the wire side of the connector or the wire side is sealed (A), disconnect the connector and probe the terminals (B) from the terminal side. Do not force the probe into the connector.

NOTICE
- Do not puncture the insulation on a wire. Punctures can cause poor or intermittent electrical connections.
- To prevent damage to the connector terminals, do not insert test equipment probes, paper clips, or other substitutes as they can damage the terminals. Damaged terminals cause a poor connection and an incorrect measurement.

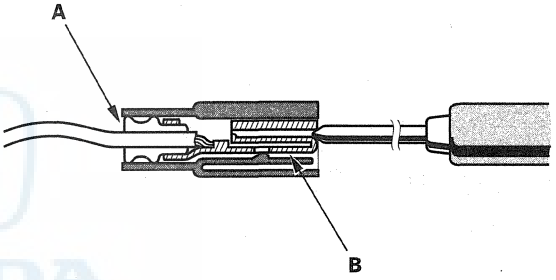

Substituting the PCM

Special Tools Required
- Honda diagnostic system (HDS) tablet tester
- Honda interface module (HIM) and an iN workstation with the latest HDS software version
- HDS pocket tester
- GNA600 and an iN workstation with the latest HDS software version

Any one of the above updating tools can be used.

NOTE: Use this procedure when you have to substitute a known-good PCM during the troubleshooting procedures.

1. Connect the HDS to the data link connector (DLC) (A) located under the driver's side of the dashboard.

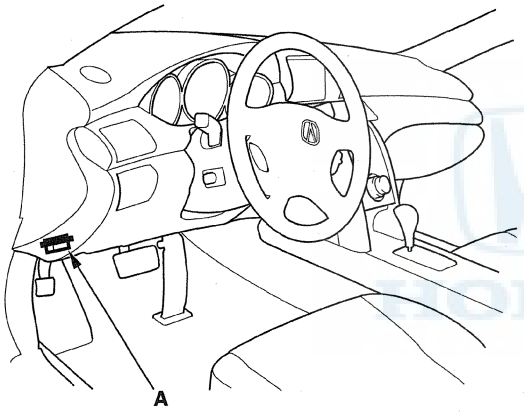

2. Turn the ignition switch to ON (II).
3. Make sure the HDS communicates with the PCM and other vehicle systems. If it doesn't, go to the DLC circuit troubleshooting (see page 11-211). If you are returning from DLC circuit troubleshooting, skip steps 4 and 5, then clean the throttle body (see page 11-366), after substituting the PCM.
4. Select the INSPECTION MENU with the HDS.
5. Select the ETCS TEST, then select the TP POSITION CHECK, and follow the screen prompts.

   NOTE: If the TP POSITION CHECK indicates FAILED, continue this procedure.

6. Turn the ignition switch to LOCK (0).
7. Jump the SCS line with the HDS.
8. Remove the console covers (A) (see page 20-92), and pull back the carpet.

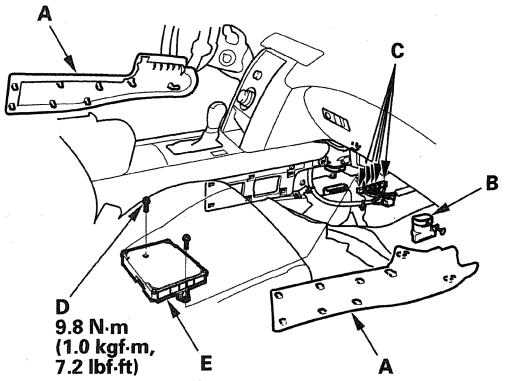

9. Remove the duct (B).
10. Disconnect the PCM connectors (C).
11. Remove the bolts (D), then remove the PCM (E).

(cont'd)

General Troubleshooting Information (cont'd)

12. Install a known-good PCM in the reverse order of removal.

13. Turn the ignition switch to ON (II).

    NOTE: DTC P0630 "VIN Not Programmed or Mismatch" may be stored because the VIN has not been programmed into the PCM; ignore it, and continue this procedure.

14. Manually input the VIN to the PCM with the HDS.

15. Select the IMMOBI SYSTEM with the HDS.

16. Enter the immobilizer PCM code that you got from the iN, and use the PCM replacement procedure in the HDS; it allows you to start the engine.

17. Reset the PCM with the HDS.

18. If the TP POSITION CHECK failed in step 5, clean the throttle body (see page 11-366).

19. Update the PCM if it does not have the latest software (see page 11-230).

20. Do the PCM idle learn procedure (see page 11-313).

21. Do the CKP pattern clear/CKP pattern learn procedure.

OBD Status

The OBD status shows the current system status of each DTC and all of the parameters. This function is used to see if the repair was successfully completed. The results of diagnostic tests for the DTC are displayed as:

- PASSED: The on board diagnosis is successfully finished.
- FAILED: The on board diagnosis has finished but failed.
- EXECUTING: The vehicle is in enable criteria conditions for the DTC, and the on board diagnosis is running.
- NOT COMPLETED: The on board diagnosis was running but is out of the enable conditions of the DTC.
- OUT OF CONDITION: The vehicle has stayed out of the enable conditions for the DTC.

DTC Troubleshooting Index

DTC (MIL indication*)	Two Drive Cycle Detection	Detection Item	MIL	Note
P0101 (50)	○	Mass Air Flow (MAF) Sensor Circuit Range/Performance Problem	ON	(see page 11-70)
P0102 (50)	—	Mass Air Flow (MAF) Sensor Circuit Low Voltage	ON	(see page 11-71)
P0103 (50)	—	Mass Air Flow (MAF) Sensor Circuit High Voltage	ON	(see page 11-74)
P0107 (3)	—	Manifold Absolute Pressure (MAP) Sensor Circuit Low Voltage	ON	(see page 11-76)
P0108 (3)	—	Manifold Absolute Pressure (MAP) Sensor Circuit High Voltage	ON	(see page 11-78)
P0111 (10)	○	Intake Air Temperature (IAT) Sensor Circuit Range/Performance Problem	ON	(see page 11-80)
P0112 (10)	—	Intake Air Temperature (IAT) Sensor Circuit Low Voltage	ON	(see page 11-81)
P0113 (10)	—	Intake Air Temperature (IAT) Sensor Circuit High Voltage	ON	(see page 11-82)
P0116 (86)	○	Engine Coolant Temperature (ECT) Sensor 1 Circuit Range/ Performance Problem	ON	(see page 11-84)
P0117 (6)	—	Engine Coolant Temperature (ECT) Sensor 1 Circuit Low Voltage	ON	(see page 11-85)
P0118 (6)	—	Engine Coolant Temperature (ECT) Sensor 1 Circuit High Voltage	ON	(see page 11-87)
P0122 (7)	—	Throttle Position (TP) Sensor A Circuit Low Voltage	ON	(see page 11-236)
P0123 (7)	—	Throttle Position (TP) Sensor A Circuit High Voltage	ON	(see page 11-239)
P0125 (86)	○	Engine Coolant Temperature (ECT) Sensor 1 Malfunction Slow Response	ON	(see page 11-89)
P0128 (87)	○	Cooling System Malfunction	ON	(see page 11-90)
P0133 (157)	○	Rear Air Fuel Ratio (A/F) Sensor (Bank 1, Sensor 1) Malfunction/Slow Response	ON	(see page 11-91)
P0134 (151)	○	Rear Air Fuel Ratio (A/F) Sensor (Bank 1, Sensor 1) Heater System Malfunction	ON	(see page 11-92)
P0135 (151)	—	Rear Air Fuel Ratio (A/F) Sensor (Bank 1, Sensor 1) Heater Circuit Malfunction	ON	(see page 11-95)
P0137 (161)	○	Rear Secondary Heated Oxygen Sensor (Secondary HO2S (Bank 1, Sensor 2)) Circuit Low Voltage	ON	(see page 11-99)
P0138 (161)	○	Rear Secondary Heated Oxygen Sensor (Secondary HO2S (Bank 1, Sensor 2)) Circuit High Voltage	ON	(see page 11-101)
P0139 (161)	○	Rear Secondary Heated Oxygen Sensor (Secondary HO2S (Bank 1, Sensor 2)) Slow Response	ON	(see page 11-104)
P0141 (163)	—	Rear Secondary Heated Oxygen Sensor (Secondary HO2S (Bank 1, Sensor 2)) Heater Circuit Malfunction	ON	(see page 11-105)
P0153 (158)	○	Front Air Fuel Ratio (A/F) Sensor (Bank 2, Sensor 1) Malfunction/Slow Response	ON	(see page 11-91)
P0154 (152)	○	Front Air Fuel Ratio (A/F) Sensor (Bank 2, Sensor 1) Heater System Malfunction	ON	(see page 11-92)
P0155 (152)	—	Front Air Fuel Ratio (A/F) Sensor (Bank 2, Sensor 1) Heater Circuit Malfunction	ON	(see page 11-95)
P0157 (162)	○	Front Secondary Heated Oxygen Sensor (Secondary HO2S (Bank 2, Sensor 2)) Circuit Low Voltage	ON	(see page 11-99)
P0158 (162)	○	Front Secondary Heated Oxygen Sensor (Secondary HO2S (Bank 2, Sensor 2)) Circuit High Voltage	ON	(see page 11-101)
P0159 (162)	○	Front Secondary Heated Oxygen Sensor (Secondary HO2S (Bank 2, Sensor 2)) Slow Response	ON	(see page 11-104)
P0161 (164)	—	Front Secondary Heated Oxygen Sensor (Secondary HO2S (Bank 2, Sensor 2)) Heater Circuit Malfunction	ON	(see page 11-105)
P0171 (153)	○	Rear Bank (Bank 1) Fuel System Too Lean	ON	(see page 11-109)
P0172 (153)	○	Rear Bank (Bank 1) Fuel System Too Rich	ON	(see page 11-109)
P0174 (154)	○	Front Bank (Bank 2) Fuel System Too Lean	ON	(see page 11-109)
P0175 (154)	○	Front Bank (Bank 2) Fuel System Too Rich	ON	(see page 11-109)
P0222 (7)	—	Throttle Position (TP) Sensor B Circuit Low Voltage	ON	(see page 11-242)
P0223 (7)	—	Throttle Position (TP) Sensor B Circuit High Voltage	ON	(see page 11-245)
P0300 (77) and any combination of the following: P0301 (71) P0302 (72) P0303 (73) P0304 (74) P0305 (75) P0306 (76)	○	Random Misfire Detected	ON	(see page 11-110)

NOTE: The above DTCs are indicated when the PGM-FI system is selected with the HDS.
Some automatic transmission DTCs cause the MIL to come on. If the MIL is on and no DTCs are indicated in the PGM-FI system, select the A/T system, and check for automatic transmission DTCs.

*: These DTCs are indicated by a blinking MIL when the SCS line is jumped with the HDS. Some DTCs do not cause the MIL to blink when the SCS line is jumped. The last four characters of these DTCs are shown in the gauge display.

(cont'd)

DTC Troubleshooting Index (cont'd)

DTC (MIL indication*)	Two Drive Cycle Detection	Detection Item	MIL	Note
P0301 (71)	○	No. 1 Cylinder Misfire Detected	ON	(see page 11-114)
P0302 (72)	○	No. 2 Cylinder Misfire Detected	ON	(see page 11-114)
P0303 (73)	○	No. 3 Cylinder Misfire Detected	ON	(see page 11-114)
P0304 (74)	○	No. 4 Cylinder Misfire Detected	ON	(see page 11-114)
P0305 (75)	○	No. 5 Cylinder Misfire Detected	ON	(see page 11-114)
P0306 (76)	○	No. 6 Cylinder Misfire Detected	ON	(see page 11-114)
P0325 (23)	—	Knock Sensor Circuit Malfunction	ON	(see page 11-123)
P0335 (4)	—	Crankshaft Position (CKP) Sensor A No Signal	ON	(see page 11-125)
P0339 (4)	—	Crankshaft Position (CKP) Sensor A Circuit Intermittent Interruption	ON	(see page 11-127)
P0340 (9)	—	Camshaft Position (CMP) Sensor No Signal	ON	(see page 11-128)
P0344 (9)	—	Camshaft Position (CMP) Sensor Intermittent Interruption	ON	(see page 11-130)
P0385 (54)	—	Crankshaft Position (CKP) Sensor B No Signal	ON	(see page 11-125)
P0389 (54)	—	Crankshaft Position (CKP) Sensor B Circuit Intermittent Interruption	ON	(see page 11-127)
P0400 (80)	○	Exhaust Gas Recirculation (EGR) System Leak Detected	ON	(see page 11-376)
P0401 (80)	○	Exhaust Gas Recirculation (EGR) Insufficient Flow	ON	(see page 11-377)
P0404 (12)	○	Exhaust Gas Recirculation (EGR) Valve Circuit Range/Performance Problem	ON	(see page 11-378)
P0406 (12)	—	Exhaust Gas Recirculation (EGR) Valve Position Sensor Circuit High Voltage	ON	(see page 11-381)
P0420 (165)	○	Rear Bank Catalyst System Efficiency Below Threshold (Bank 1)	ON	(see page 11-371)
P0430 (166)	○	Front Bank Catalyst System Efficiency Below Threshold (Bank 2)	ON	(see page 11-371)
P0443 (92)	—	Evaporative Emission (EVAP) Canister Purge Valve Circuit Malfunction	ON	(see page 11-395)
P0451 (91)	○	Fuel Tank Pressure (FTP) Sensor Circuit Range/Performance Problem	ON	(see page 11-398)
P0452 (91)	—	Fuel Tank Pressure (FTP) Sensor Circuit Low Voltage	ON	(see page 11-399)
P0453 (91)	—	Fuel Tank Pressure (FTP) Sensor Circuit High Voltage	ON	(see page 11-402)
P0455 (90)	○	Evaporative Emission (EVAP) System Large Leak Detected	ON	(see page 11-405)
P0456 (90)	○	Evaporative Emission (EVAP) System Very Small Leak Detected	ON	(see page 11-405)
P0461	—	Fuel Level Sensor (Fuel Gauge Sending Unit) Circuit Range/ Performance Problem	OFF	(see page 11-316)
P0462	—	Fuel Level Sensor (Fuel Gauge Sending Unit) Circuit Low Voltage	OFF	(see page 11-316)
P0463	—	Fuel Level Sensor (Fuel Gauge Sending Unit) Circuit High Voltage	OFF	(see page 11-319)
P0480	—	Radiator Fan Control (RFC) System Malfunction	OFF	(see page 11-296)
P0496 (92)	○	Evaporative Emission (EVAP) System High Purge Flow Detected	ON	(see page 11-409)
P0497 (90)	○	Evaporative Emission (EVAP) System Low Purge Flow Detected	ON	(see page 11-410)
P0498 (117)	—	Evaporative Emission (EVAP) Canister Vent Shut Valve Control Circuit Low Voltage	ON	(see page 11-414)
P0499 (117)	—	Evaporative Emission (EVAP) Canister Vent Shut Valve Control Circuit High Voltage	ON	(see page 11-417)
P050A (167)	○	Cold Start Idle Air Control System Performance Problem	ON	(see page 11-131)
P050B (167)	○	Cold Start Ignition Timing Control System Performance Problem	ON	(see page 11-133)
P0506 (14)	○	Idle Control System RPM Lower Than Expected	ON	(see page 11-304)
P0507 (14)	○	Idle Control System RPM Higher Than Expected	ON	(see page 11-306)
P0562	—	Charging System Low Voltage	OFF	(see page 11-136)
P0563	—	Powertrain Control Module (PCM) Power Source Circuit Unexpected Voltage	OFF	(see page 11-137)
P0602 (196)	—	Powertrain Control Module (PCM) Programming Error	ON	(see page 11-140)
P0615	—	Starter Cut Relay STRLD Circuit Malfunction	OFF	(see page 11-141)
P062F (131)	—	Powertrain Control Module (PCM) Internal Control Module Keep Alive Memory (KAM) Error	ON	(see page 11-143)
P0627 (169)	—	Fuel Pump Control Module System Malfunction	ON	(see page 11-323)
P0630 (139)	—	VIN Not Programmed or Mismatch	ON	(see page 11-143)
P0685 (135)	○	Powertrain Control Module (PCM) Internal Circuit Malfunction (Power Control Circuit)	ON	(see page 11-144)
P1077 (106)	○	Intake Manifold Tuning (IMT) Valve Stuck in High RPM Position	ON	(see page 11-357)
P1078 (106)	○	Intake Manifold Tuning (IMT) Valve Stuck in Low RPM Position	ON	(see page 11-360)
P1109 (13)	—	Barometric Pressure (BARO) Sensor Circuit Out of Range High	ON	(see page 11-145)
P1116 (86)	○	Engine Coolant Temperature (ECT) Sensor 1 Circuit Range/ Performance Problem	ON	(see page 11-146)

NOTE: The above DTCs are indicated when the PGM-FI system is selected with the HDS.
Some automatic transmission DTCs cause the MIL to come on. If the MIL is on and no DTCs are indicated in the PGM-FI system, select the A/T system, and check for automatic transmission DTCs.

*: These DTCs are indicated by a blinking MIL when the SCS line is jumped with the HDS. Some DTCs do not cause the MIL to blink when the SCS line is jumped. The last four characters of these DTCs are shown in the gauge display.

DTC (MIL indication*)	Two Drive Cycle Detection	Detection Item	MIL	Note
P1128 (5)	○	Manifold Absolute Pressure (MAP) Sensor Signal Lower Than Expected	ON	(see page 11-147)
P1129 (5)	○	Manifold Absolute Pressure (MAP) Sensor Signal Higher Than Expected	ON	(see page 11-148)
P1172 (157)	—	Rear Air Fuel Ratio (A/F) Sensor (Bank 1, Sensor 1) Circuit Out of Range High	ON	(see page 11-150)
P1174 (158)	—	Front Air Fuel Ratio (A/F) Sensor (Bank 2, Sensor 1) Circuit Out of Range High	ON	(see page 11-150)
P1297	—	Electrical Load Detector (ELD) Circuit Low Voltage	OFF	(see page 11-151)
P1298	—	Electrical Load Detector (ELD) Circuit High Voltage	OFF	(see page 11-152)
P1454 (91)	○	Fuel Tank Pressure (FTP) Sensor Circuit Range/Performance Problem	ON	(see page 11-418)
P145C (90)	—	Evaporative Emission (EVAP) System Purge Flow Malfunction	ON	(see page 11-420)
P1549	—	Charging System High Voltage	OFF	(see page 11-154)
P1683 (40)	—	Throttle Valve Default Position Spring Performance Problem	ON	(see page 11-248)
P1684 (40)	—	Throttle Valve Return Spring Performance Problem	ON	(see page 11-249)
P16BB	—	Alternator B Terminal Circuit Low Voltage	OFF	(see page 11-155)
P16BC	—	Alternator FR Terminal Circuit/IGP Circuit Low Voltage	OFF	(see page 11-156)
P16BD	—	Starter Relay 2 Malfunction	OFF	(see page 11-159)
P16BE	—	Starter Relay 1 Malfunction	OFF	(see page 11-159)
P16BF	—	Starter Relay STRLY Circuit Malfunction	OFF	(see page 11-160)
P2101 (40)	—	Throttle Actuator System Malfunction	ON	(see page 11-250)
P2108 (40)	—	Throttle Actuator Control Module Problem	ON	(see page 11-252)
P2118 (40)	—	Throttle Actuator Current Range/Performance Problem	ON	(see page 11-253)
P2122 (37)	—	Accelerator Pedal Position (APP) Sensor A (Throttle Position Sensor D) Circuit Low Voltage	ON	(see page 11-255)
P2123 (37)	—	Accelerator Pedal Position (APP) Sensor A (Throttle Position Sensor D) Circuit High Voltage	ON	(see page 11-257)
P2127 (37)	—	Accelerator Pedal Position (APP) Sensor B (Throttle Position Sensor E) Circuit Low Voltage	ON	(see page 11-259)
P2128 (37)	—	Accelerator Pedal Position (APP) Sensor B (Throttle Position Sensor E) Circuit High Voltage	ON	(see page 11-261)
P2135 (7)	—	Throttle Position (TP) Sensor A/B Incorrect Voltage Correlation	ON	(see page 11-263)
P2138 (37)	—	Accelerator Pedal Position (APP) Sensor A/B (Throttle Position Sensor D/E) Incorrect Voltage Correlation	ON	(see page 11-265)
P2176 (40)	—	Throttle Actuator Control System Idle Position Not Learned	ON	(see page 11-267)
P2183 (192)	○	Engine Coolant Temperature (ECT) Sensor 2 Circuit Range/ Performance Problem	ON	(see page 11-162)
P2184 (192)	—	Engine Coolant Temperature (ECT) Sensor 2 Circuit Low Voltage	ON	(see page 11-164)
P2185 (192)	—	Engine Coolant Temperature (ECT) Sensor 2 Circuit High Voltage	ON	(see page 11-165)
P2195 (155)	—	Rear Air Fuel Ratio (A/F) Sensor (Bank 1, Sensor 1) Signal Stuck Lean	ON	(see page 11-168)
P2197 (156)	—	Front Air Fuel Ratio (A/F) Sensor (Bank 2, Sensor 1) Signal Stuck Lean	ON	(see page 11-168)
P2227 (13)	○	Barometric Pressure (BARO) Sensor Circuit Range/Performance Problem	ON	(see page 11-170)
P2228 (13)	—	Barometric Pressure (BARO) Sensor Circuit Low Voltage	ON	(see page 11-171)
P2229 (13)	—	Barometric Pressure (BARO) Sensor Circuit High Voltage	ON	(see page 11-172)
P2237 (155)	—	Rear Air Fuel Ratio (A/F) Sensor (Bank 1, Sensor 1) IP Circuit High Voltage	ON	(see page 11-172)
P2238 (155)	—	Rear Air Fuel Ratio (A/F) Sensor (Bank 1, Sensor 1) IP Circuit Low Voltage	ON	(see page 11-174)
P2240 (156)	—	Front Air Fuel Ratio (A/F) Sensor (Bank 2, Sensor 1) IP Circuit High Voltage	ON	(see page 11-172)
P2241 (156)	—	Front Air Fuel Ratio (A/F) Sensor (Bank 2, Sensor 1) IP Circuit Low Voltage	ON	(see page 11-174)
P2243 (155)	—	Rear Air Fuel Ratio (A/F) Sensor (Bank 1, Sensor 1) VCENT Circuit High Voltage	ON	(see page 11-176)
P2245 (155)	—	Rear Air Fuel Ratio (A/F) Sensor (Bank 1, Sensor 1) VCENT Circuit Low Voltage	ON	(see page 11-178)
P2247 (156)	—	Front Air Fuel Ratio (A/F) Sensor (Bank 2, Sensor 1) VCENT Circuit High Voltage	ON	(see page 11-176)
P2249 (156)	—	Front Air Fuel Ratio (A/F) Sensor (Bank 2, Sensor 1) VCENT Circuit Low Voltage	ON	(see page 11-178)

NOTE: The above DTCs are indicated when the PGM-FI system is selected with the HDS.
Some automatic transmission DTCs cause the MIL to come on. If the MIL is on and no DTCs are indicated in the PGM-FI system, select the A/T system, and check for automatic transmission DTCs.

*: These DTCs are indicated by a blinking MIL when the SCS line is jumped with the HDS. Some DTCs do not cause the MIL to blink when the SCS line is jumped. The last four characters of these DTCs are shown in the gauge display.

(cont'd)

DTC Troubleshooting Index (cont'd)

DTC (MIL indication*)	Two Drive Cycle Detection	Detection Item	MIL	Note
P2251 (155)	—	Rear Air Fuel Ratio (A/F) Sensor (Bank 1, Sensor 1) VS Circuit High Voltage	ON	(see page 11-180)
P2252 (155)	—	Rear Air Fuel Ratio (A/F) Sensor (Bank 1, Sensor 1) VS Circuit Low Voltage	ON	(see page 11-182)
P2254 (156)	—	Front Air Fuel Ratio (A/F) Sensor (Bank 2, Sensor 1) VS Circuit High Voltage	ON	(see page 11-180)
P2255 (156)	—	Front Air Fuel Ratio (A/F) Sensor (Bank 2, Sensor 1) VS Circuit Low Voltage	ON	(see page 11-182)
P2279 (109)	○	Intake Air System Leak	ON	(see page 11-391)
P2413 (12)	○	Exhaust Gas Recirculation (EGR) System Malfunction	ON	(see page 11-383)
P2422 (117)	○	Evaporative Emission (EVAP) Canister Vent Shut Valve Stuck Close Malfunction	ON	(see page 11-418)
P2552 (40)	—	Throttle Actuator Control Module Relay Malfunction	ON	(see page 11-269)
P2610 (132)	—	Powertrain Control Module (PCM) Internal Power Off Timer Malfunction	ON	(see page 11-184)
P2646 (22)	—	Rocker Arm Oil Pressure Switch Circuit Low Voltage	ON	(see page 11-285)
P2647 (22)	—	Rocker Arm Oil Pressure Switch Circuit High Voltage	ON	(see page 11-287)
P2648 (21)	—	Rocker Arm Oil Control Solenoid Circuit Low Voltage	ON	(see page 11-290)
P2649 (21)	—	Rocker Arm Oil Control Solenoid Circuit High Voltage	ON	(see page 11-292)
P2A00 (157)	○	Rear Air Fuel Ratio (A/F) Sensor (Bank 1, Sensor 1) Circuit Range/ Performance Problem	ON	(see page 11-185)
P2A03 (158)	○	Front Air Fuel Ratio (A/F) Sensor (Bank 2, Sensor 1) Circuit Range/ Performance Problem	ON	(see page 11-185)
U0073 (126)	—	F-CAN Malfunction (BUS-OFF)	ON	(see page 11-186)
U0107 (30)	—	Lost Communication With Throttle Actuator Control Module	ON	(see page 11-271)
U0114	—	F-CAN Malfunction (PCM-SH-AWD Control Unit)	OFF	(see page 11-186)
U0122	—	F-CAN Malfunction (PCM-VSA Modulator-Control Unit)	OFF	(see page 11-188)
U0155 (126)	—	F-CAN Malfunction (PCM-Gauge Control Module)	ON	(see page 11-190)

NOTE: The above DTCs are indicated when the PGM-FI system is selected with the HDS.
Some automatic transmission DTCs cause the MIL to come on. If the MIL is on and no DTCs are indicated in the PGM-FI system, select the A/T system, and check for automatic transmission DTCs.

*: These DTCs are indicated by a blinking MIL when the SCS line is jumped with the HDS. Some DTCs do not cause the MIL to blink when the SCS line is jumped. The last four characters of these DTCs are shown in the gauge display.

Symptom Troubleshooting Index

When the vehicle has one of these symptoms, check for a diagnostic trouble code (DTC) with the HDS. If there is no DTC, do the diagnostic procedure for the symptom, in the sequence listed, until you find the cause.

Symptom	Diagnostic procedure	Also check for
Engine will not start (MIL works OK, no DTCs set)	1. Test the battery (see page 22-90). 2. Test the starter (see page 4-9). 3. Check the fuel pressure (see page 11-335).	• Low compression • No ignition spark • Intake air leaks • Locked up engine • Broken timing belt • Fuel contamination
Engine will not start (MIL comes on and stays on, no DTCs set)	Troubleshoot the DLC circuit (see page 11-211).	• No power to PCM • No ground to PCM
MIL comes on and stays on, or never comes on at all, no DTCs set	Troubleshoot the MIL circuit (see page 11-210).	
Engine will not start (MIL works OK, no DTCs set, immobilizer indicator stays on or flashes)	Check the immobilizer system (see page 22-505).	
Engine starts but stalls immediately (MIL works OK, no DTCs set, immobilizer indicator stays on or flashes)	Check the immobilizer system (see page 22-505).	
Engine is hard to start (MIL works OK, no DTCs set)	1. Test the battery (see page 22-90). 2. Check the fuel pressure (see page 11-335). 3. Clean the throttle body (see page 11-366).	• Low compression • Intake air leaks • Fuel contamination • Weak spark
Cold fast idle too low (MIL works OK, no DTCs set)	1. Do the PCM idle learn procedure (see page 11-313). 2. Check the idle speed (see page 11-312). 3. Clean the throttle body (see page 11-366).	
Cold fast idle too high (MIL works OK, no DTCs set)	1. Do the PCM idle learn procedure (see page 11-313). 2. Check the idle speed (see page 11-312). 3. Do the throttle position learning check (see page 11-365).	Intake air leaks
Idle speed fluctuates (MIL works OK, no DTCs set)	1. Do the PCM idle learn procedure (see page 11-313). 2. Check the idle speed (see page 11-312). 3. Do the carbon accumulation check (see page 11-365). 4. Troubleshoot the A/C signal circuit (see page 11-307).	• Incorrect valve timing or clearance adjustment • Intake air leaks

(cont'd)

Symptom Troubleshooting Index (cont'd)

Symptom	Diagnostic procedure	Also check for
After warming up, idle speed is below specification without load (MIL works OK, no DTCs set)	1. Troubleshoot the alternator FR signal circuit (see page 11-308). 2. Do the carbon accumulation check (see page 11-365).	Incorrect valve timing
After warming up, idle speed is above specification without load (MIL works OK, no DTCs set)	1. Troubleshoot the alternator FR signal circuit (see page 11-308). 2. Inspect the APP sensor (see page 11-281).	Intake air leaks
After warming up, idle speed drops when steering wheel is turned (MIL works OK, no DTCs set)	1. Do the PCM idle learn procedure (see page 11-313). 2. Troubleshoot the PSP switch signal circuit (see page 11-308). 3. Do the carbon accumulation check (see page 11-365).	Power steering system problem
Low power (MIL works OK, no DTCs set)	Check the fuel pressure (see page 11-335).	• Low compression • Incorrect camshaft timing • Incorrect engine oil level • Exhaust restriction
Engine stalls (MIL works OK, no DTCs set)	1. Do the PCM idle learn procedure (see page 11-313). 2. Check the fuel pressure (see page 11-335). 3. Check the idle speed (see page 11-312). 4. Troubleshoot the brake pedal position switch signal circuit (see page 11-311).	• Intake air leaks • Faulty harness and sensor connections
Difficult to refuel (MIL works OK, no DTCs set)	1. Check the fuel vent tube between the EVAP canister and the fuel tank. 2. Check the fuel tank vapor recirculation tube between the fuel pipe and the fuel tank. 3. Replace the fuel tank (see page 11-351).	Malfunctioning gas station filling nozzle.
Fuel overflows during refueling (No DTCs set)	Replace the fuel tank (see page 11-351).	Malfunctioning gas station filling nozzle.
Fuel cap warning message stays on (MIL works OK, no DTCs set)	Troubleshoot the fuel cap warning message system (see page 11-421).	
HDS does not communicate with the PCM or the vehicle	Troubleshoot the DLC circuit (see page 11-211).	Correct HDS software

System Description

Fuel and Emissions System Diagram

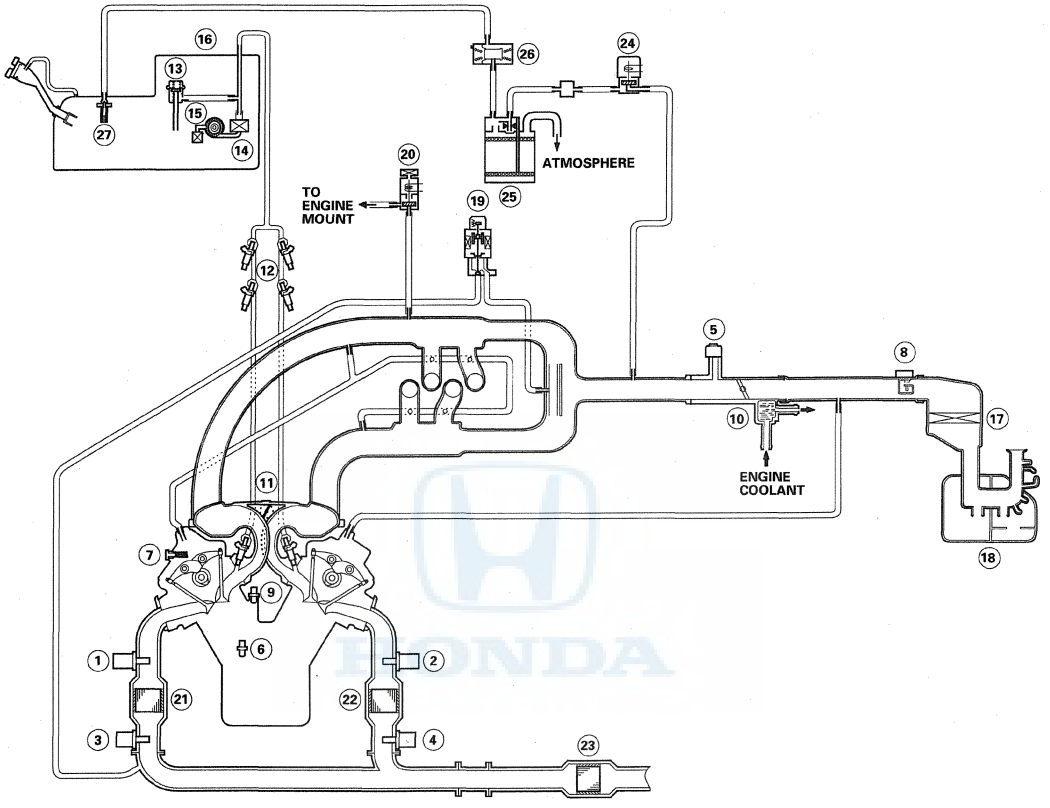

① FRONT AIR FUEL RATIO (A/F) SENSOR (BANK 2, SENSOR 1)
② REAR AIR FUEL RATIO (A/F) SENSOR (BANK 1, SENSOR 1)
③ FRONT SECONDARY HEATED OXYGEN SENSOR (SECONDARY HO2S) (BANK 2, SENSOR 2)
④ REAR SECONDARY HEATED OXYGEN SENSOR (SECONDARY HO2S) (BANK 1, SENSOR 2)
⑤ MANIFOLD ABSOLUTE PRESSURE (MAP) SENSOR
⑥ ENGINE COOLANT TEMPERATURE (ECT) SENSOR 1
⑦ POSITIVE CRANKCASE VENTILATION (PCV) VALVE
⑧ MASS AIR FLOW (MAF) SENSOR/ INTAKE AIR TEMPERATURE (IAT) SENSOR
⑨ KNOCK SENSOR
⑩ THROTTLE BODY
⑪ INTAKE MANIFOLD TUNING (IMT) ACTUATOR
⑫ INJECTOR
⑬ FUEL PRESSURE REGULATOR
⑭ FUEL FILTER
⑮ FUEL PUMP
⑯ FUEL TANK
⑰ AIR CLEANER
⑱ INTAKE AIR RESONATOR
⑲ EXHAUST GAS RECIRCULATION (EGR) VALVE and POSITION SENSOR
⑳ ENGINE MOUNT CONTROL SOLENOID VALVE
㉑ FRONT WARM UP THREE WAY CATALYTIC CONVERTER (WU-TWC) (BANK 2)
㉒ REAR WARM UP THREE WAY CATALYTIC CONVERTER (WU-TWC) (BANK 1)
㉓ UNDER-FLOOR THREE WAY CATALYTIC CONVERTER (TWC)
㉔ EVAPORATIVE EMISSION (EVAP) CANISTER PURGE VALVE
㉕ EVAPORATIVE EMISSION (EVAP) CANISTER
㉖ EVAPORATIVE EMISSION (EVAP) TWO WAY VALVE
㉗ FUEL TANK VAPOR/LIQUID SEPARATION VALVE

(cont'd)

System Description (cont'd)

Vacuum Hose Routing

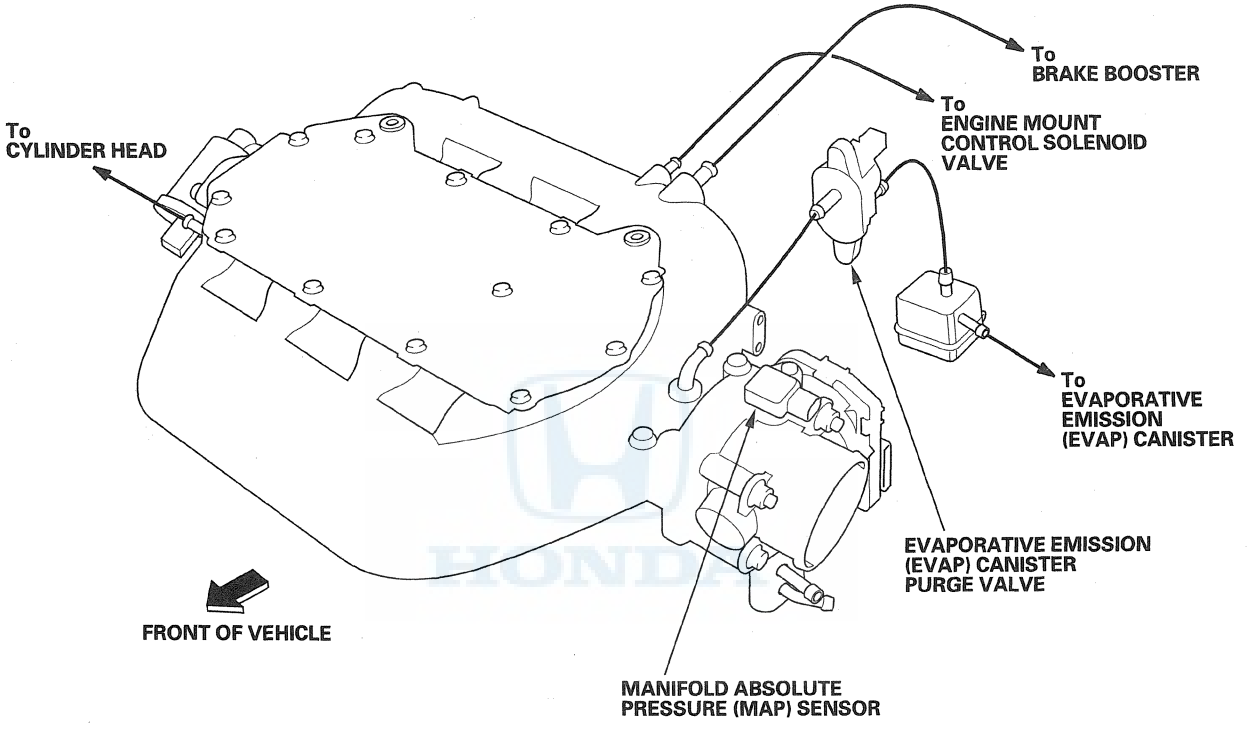

Electronic Control Systems

The functions of the fuel and emission control systems are managed by the powertrain control module (PCM).

Self-diagnosis
The PCM detects a failure of a signal from a sensor or from another control unit and stores a Pending or Confirmed DTC. Depending on the failure, a Confirmed DTC is stored in either the first or the second drive cycle. When a DTC is stored, the PCM turns on the malfunction indicator lamp (MIL) by supplying ground to the MIL circuit.

- **One Drive Cycle Detection Method**
  When an abnormality occurs in the signal from a sensor or from another control unit, the PCM stores a Confirmed DTC for the failure and turns on the MIL immediately.

- **Two Drive Cycle Detection Method**
  When an abnormality occurs in the signal from a sensor or from another control unit in first drive cycle, the PCM stores a Pending DTC for the failure. The MIL does not come on at this time. If the failure continues in the second drive cycle, the Pending PCM stores a Confirmed DTC and turns on the MIL.

Fail-safe Function
When an abnormality occurs in the signal from a sensor or from another control unit, the PCM ignores that signal and substitutes a pre-programmed value that allows the engine to continue running. This causes a Confirmed DTC to be stored and the MIL to come on.

MIL Bulb Check and Readiness Code Condition
When the ignition switch is turned to ON (II), the PCM turns on the MIL via the F-CAN circuit for about 15 to 20 seconds to check the bulb condition. If any readiness codes are not set to complete, the MIL flashes five times. If all readiness codes are set to complete, the MIL goes off.

Self Shut Down (SSD) Mode
After the ignition switch is turned to LOCK (0), the PCM stays on about 30 minutes. If the PCM connector is disconnected during this time, the PCM may be damaged. To cancel this mode, disconnect the negative cable from the battery or jump the SCS line with the HDS after the ignition switch is turned to LOCK (0).

(cont'd)

System Description (cont'd)

PCM Inputs and Outputs at PCM Connector A (31P)

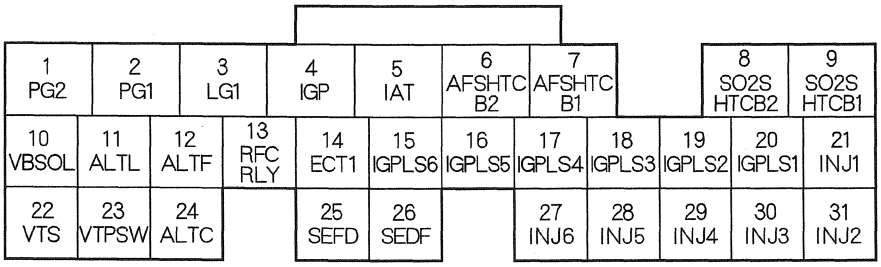

Wire side of female terminals

Terminal number	Wire color	Terminal name	Description	Signal
1	BLK	PG2 (POWER GROUND)	Ground circuit for PCM	Less than 0.2 V at all times
2	BLK	PG1 (POWER GROUND)	Ground circuit for PCM	Less than 0.2 V at all times
3	BRN/YEL	LG1 (LOGIC GROUND)	Ground circuit for PCM	Less than 0.2 V at all times
4	YEL/BLK	IGP (POWER SOURCE)	Power source for PCM	With ignition switch ON (II): battery voltage
5	RED/YEL	IAT (INTAKE AIR TEMPERATURE (IAT) SENSOR)	Detects IAT sensor signal	With ignition switch ON (II): about 0.1—4.8 V (depending on intake air temperature)
6	GRN/WHT	AFSHTCB2 (AIR FUEL RATIO (A/F) SENSOR HEATER CONTROL BANK 2)	Drives front A/F sensor heater (Bank 2, sensor 1)	With ignition switch ON (II): battery voltage With warmed up engine running: about 0 V or pulses
7	BLK/WHT	AFSHTCB1 (AIR FUEL RATIO (A/F) SENSOR HEATER CONTROL BANK 1)	Drives rear A/F sensor heater (Bank 1, sensor 1)	With ignition switch ON (II): battery voltage With warmed up engine running: about 0 V or pulses
8	GRN/RED	SO2SHTCB2 (SECONDARY HEATED OXYGEN SENSOR (SECONDARY HO2S) HEATER CONTROL BANK 2)	Drives front secondary HO2S heater (Bank 2, sensor 2)	With ignition switch ON (II): battery voltage With warmed up engine running: duty controlled
9	BLK/WHT	SO2SHTCB1 (SECONDARY HEATED OXYGEN SENSOR (SECONDARY HO2S) HEATER CONTROL BANK 1)	Drives rear secondary HO2S heater (Bank 1, sensor 2)	With ignition switch ON (II): battery voltage With warmed up engine running: duty controlled
10	BLK/YEL	VBSOL (POWER SOURCE FOR SOLENOID VALVES)	Power source for solenoid valves	With ignition switch ON (II): battery voltage With ignition switch OFF: about 0 V
11	WHT/BLU	ALTL (ALTERNATOR L SIGNAL)	Detects alternator L signal	With ignition switch ON (II): about 0 V With engine running: battery voltage
12	WHT/RED	ALTF (ALTERNATOR FR SIGNAL)	Detects alternator FR signal	With engine running: about 0—5.0 V (depending on electrical load)
13	LT BLU	RFCRLY (RADIATOR FAN RELAY)	Drives radiator fan control (RFC) unit relay	With radiator fan motor ON: about 0 V With radiator fan motor OFF: battery voltage
14	RED/WHT	ECT1 (ENGINE COOLANT TEMPERATURE (ECT) SENSOR 1)	Detects ECT sensor 1 signal	With ignition switch ON (II): about 0.1—4.8 V (depending on engine coolant temperature)

PCM Inputs and Outputs at PCM Connector A (31P)

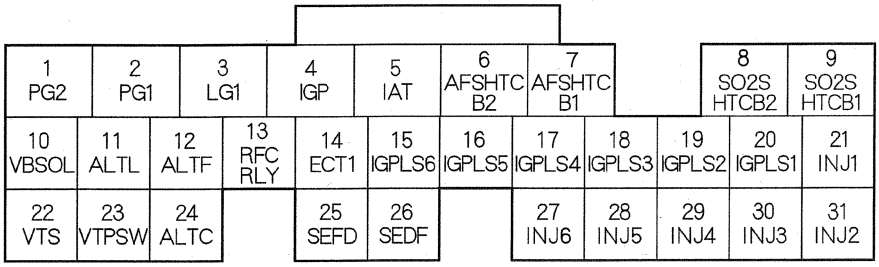

Wire side of female terminals

Terminal number	Wire color	Terminal name	Description	Signal
15	BRN/WHT	IGPLS6 (No. 6 IGNITION COIL PULSE)	Drives No. 6 ignition coil	With ignition switch ON (II): about 0 V With engine running: pulses
16	BLK/RED	IGPLS5 (No. 5 IGNITION COIL PULSE)	Drives No. 5 ignition coil	
17	BRN	IGPLS4 (No. 4 IGNITION COIL PULSE)	Drives No. 4 ignition coil	
18	WHT/BLU	IGPLS3 (No. 3 IGNITION COIL PULSE)	Drives No. 3 ignition coil	
19	BLU/RED	IGPLS2 (No. 2 IGNITION COIL PULSE)	Drives No. 2 ignition coil	
20	YEL/GRN	IGPLS1 (No. 1 IGNITION COIL PULSE)	Drives No. 1 ignition coil	
21	BRN	INJ1 (No. 1 INJECTOR)	Drives No. 1 injector	At idle: duty controlled With ignition switch ON (II): battery voltage
22	GRN/YEL	VTS (ROCKER ARM OIL CONTROL SOLENOID (VTEC SOLENOID VALVE))	Drives rocker arm oil control solenoid (VTEC solenoid valve)	At idle: about 0 V
23	BLU/BLK	VTPSW (ROCKER ARM OIL PRESSURE SWITCH (VTEC OIL PRESSURE SWITCH))	Detects rocker arm oil pressure switch (VTEC oil pressure switch) signal	With engine at low speed: about 0 V With engine at high speed: battery voltage
24	WHT/GRN	ALTC (ALTERNATOR CONTROL)	Sends alternator control signal	With warmed up engine running: battery voltage (depending on electrical load)
25	GRN	SEFD (THROTTLE ACTUATOR CONTROL SERIAL SIGNAL)	Sends throttle actuator control serial signal	
26	BLU	SEDF (THROTTLE ACTUATOR CONTROL SERIAL SIGNAL)	Detects throttle actuator control serial signal	
27	WHT/BLU	INJ6 (No. 6 INJECTOR)	Drives No. 6 injector	At idle: duty controlled With ignition switch ON (II): battery voltage
28	BLK/RED	INJ5 (No. 5 INJECTOR)	Drives No. 5 injector	
29	YEL	INJ4 (No. 4 INJECTOR)	Drives No. 4 injector	
30	BLU	INJ3 (No. 3 INJECTOR)	Drives No. 3 injector	
31	RED	INJ2 (No. 2 INJECTOR)	Drives No. 2 injector	

(cont'd)

System Description (cont'd)

PCM Inputs and Outputs at PCM Connector B (24P)

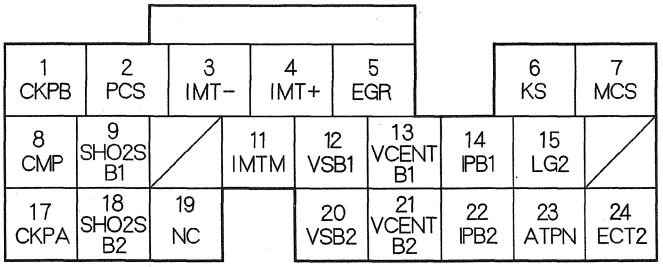

Wire side of female terminals

Terminal number	Wire color	Terminal name	Description	Signal
1	BLU/RED	CKPB (CRANKSHAFT POSITION (CKP) SENSOR B)	Drives CKP sensor B signal	With engine running: pulses
2	RED/YEL	PCS (EVAPORATIVE EMISSION (EVAP) CANISTER PURGE VALVE)	Drives EVAP canister purge valve	With engine running, engine coolant below 140 °F (60 °C): battery voltage With engine running, engine coolant above 140 °F (60 °C): duty controlled
3	WHT/RED	IMT− (INTAKE MANIFOLD TUNING (IMT) ACTUATOR −SIDE)	Ground for IMT actuator	With ignition switch ON (II): battery voltage
4	WHT/BLU	IMT+ (INTAKE MANIFOLD TUNING (IMT) ACTUATOR +SIDE)	Drives IMT actuator	With ignition switch ON (II): battery voltage
5	BLU/RED	EGR (EXHAUST GAS RECIRCULATION (EGR) VALVE)	Drives EGR valve	With EGR operating: duty controlled With EGR not operating: about 0 V
6	RED/BLU	KS (KNOCK SENSOR)	Detects knock sensor signal	With engine knocking: pulses
7	BLU/YEL	MCS (ENGINE MOUNT CONTROL SOLENOID VALVE)	Drives engine mount control solenoid valve	At idle: about 0 V Above idle: battery voltage
8	YEL	CMP (CAMSHAFT POSITION (CMP) SENSOR)	Detects CMP sensor signal	With engine running: pulses
9	GRN	SHO2SB1 (SECONDARY HEATED OXYGEN SENSOR (SECONDARY HO2S) BANK 1, SENSOR 2)	Detects rear secondary HO2S (Bank 1, sensor 2) signal	With throttle fully opened from idle and warmed up engine: above 0.6 V With throttle quickly closed: below 0.4 V
11	WHT/BLK	IMTM (INTAKE MANIFOLD TUNING (IMT) ACTUATOR MONITOR)	Detects IMT actuator position	With engine running: about 5.0 V With engine speed above 3,800 rpm: about 0 V

PCM Inputs and Outputs at PCM Connector B (24P)

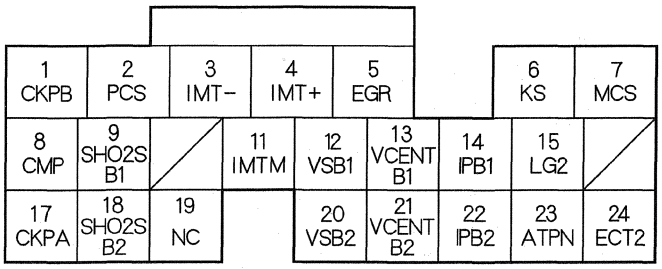

Wire side of female terminals

Terminal number	Wire color	Terminal name	Description	Signal
12	BLU	VSB1 (VS CELL +BANK 1)	Detects rear A/F sensor (Bank 1, sensor 1) VS CELL signal	With engine running: about 3.4—4.8 V
13	RED	VCENTB1 (VIRTUAL GROUND BANK 1)	Reference voltage for rear A/F sensor (Bank 1, sensor 1)	With warmed up engine at idle: about 3.4—3.8 V
14	GRN	IPB1 (IP CELL +BANK 1)	Detects rear A/F sensor (Bank 1, sensor 1) pump cell	With engine running: about 2.0—5.6 V
15	BRN/YEL	LG2 (LOGIC GROUND)	Ground circuit for PCM	Less than 0.2 V at all times
17	BLU	CKPA (CRANKSHAFT POSITION (CKP) SENSOR A)	Detects CKP sensor A signal	With engine running: pulses
18	WHT	SHO2SB2 (SECONDARY HEATED OXYGEN SENSOR (SECONDARY HO2S) BANK 2, SENSOR 2)	Detects front secondary HO2S (Bank 2, sensor 2) signal	With throttle fully opened from idle and warmed up engine: above 0.6 V With throttle quickly closed: below 0.4 V
19	BLU	NC (OUTPUT SHAFT (COUNTERSHAFT) SPEED SENSOR)	Detects output shaft (countershaft) speed sensor signals	With ignition switch ON (II): about 0 V or about 5.0 V With driving: pluses
20	RED/BLU	VSB2 (VS CELL +BANK 2)	Detects front A/F sensor (Bank 2, sensor 1) VS CELL signal	With warmed up engine running: about 3.4—4.8 V
21	RED/WHT	VCENTB2 (VIRTUAL GROUND BANK 2)	Reference voltage for front A/F sensor (Bank 2, sensor 1)	With warmed up engine at idle: about 3.4—4.8 V
22	GRN/RED	IPB2 (IP CELL +BANK 2)	Detects front A/F sensor (Bank 2, sensor 1) pump cell	With engine running: about 2.0—5.6 V
23	RED/BLK	ATPN (TRANSMISSION RANGE SWITCH N POSITION)	Detects transmission range switch N position signal	In N: about 0 V In any position other than N: battery voltage
24	GRN/RED	ECT2 (ENGINE COOLANT TEMPERATURE (ECT) SENSOR 2)	Detects ECT sensor 2 signal	With ignition switch ON (II): about 0.1—4.8 V (depending on engine coolant temperature)

(cont'd)

System Description (cont'd)

PCM Inputs and Outputs at PCM Connector C (22P)

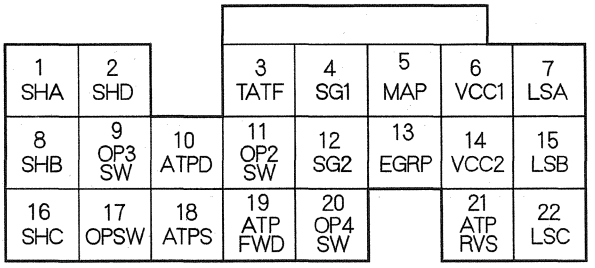

Wire side of female terminals

Terminal number	Wire color	Terminal name	Description	Signal
1	BLU/YEL	SHA (SHIFT SOLENOID VALVE A)	Drives shift solenoid valve A	With engine running in D (in 2nd and 3rd gears), S (in 2nd and 3rd gears), and R: battery voltage With engine running in P, N, D (in 1st, 4th, and 5th gears), and S (in 1st, 4th, and 5th gears): about 0 V
2	GRN/RED	SHD (SHIFT SOLENOID VALVE D)	Drives shift solenoid valve D	With engine running in N and D: about 0 V With engine running in P, N, and D: battery voltage In any other position: depending on conditions
3	BLU/YEL	TATF (ATF TEMPERATURE SENSOR)	Detects ATF temperature sensor signal	With ignition switch ON (II): about 0.2—4.0 V (depending on ATF temperature)
4	GRN/WHT	SG1 (SENSOR GROUND)	Sensor ground	Less than 0.2 V at all times
5	GRN/RED	MAP (MANIFOLD ABSOLUTE PRESSURE (MAP) SENSOR)	Detects MAP sensor signal	With ignition switch ON (II): about 3.0 V At idle: about 0.2 V (depending on engine speed)
6	YEL/RED	VCC1 (SENSOR VOLTAGE)	Provides sensor voltage	With ignition switch ON (II): about 5.0 V With ignition switch OFF: about 0 V
7	RED	LSA (A/T CLUTCH PRESSURE CONTROL SOLENOID VALVE A)	Drives A/T clutch pressure control solenoid valve A	With ignition switch ON (II): pulses
8	GRN/WHT	SHB (SHIFT SOLENOID VALVE B)	Drives shift solenoid valve B	With engine running in P, R, N, D (in 1st, 2nd, and 5th gears), and S (in 1st, 2nd, and 5th gears): battery voltage With engine running in D (in 3rd and 4th gears) and S (in 3rd and 4th gears): about 0 V
9	BLU/WHT	OP3SW (3RD CLUTCH TRANSMISSION FLUID PRESSURE SWITCH)	Detects 3rd clutch transmission fluid pressure switch input signal	With ignition switch ON (II): • Without 3rd clutch pressure: about 5.0 V • With 3rd clutch pressure: about 0 V
10	YEL/GRN	ATPD (TRANSMISSION RANGE SWITCH D POSITION)	Detects transmission range switch D position input signal	In D: about 0 V In any position other than D: battery voltage
11	BLU/BLK	OP2SW (2ND CLUTCH TRANSMISSION FLUID PRESSURE SWITCH)	Detects 2nd clutch transmission fluid pressure switch input signal	With ignition switch ON (II): • Without 2nd clutch pressure: about 5.0 V • With 2nd clutch pressure: about 0 V
12	GRN/YEL	SG2 (SENSOR GROUND)	Sensor ground	Less than 0.2 V at all times
13	WHT/BLK	EGRP (EXHAUST GAS RECIRCULATION (EGR) VALVE POSITION SENSOR)	Detects EGR valve position sensor signal	With engine running: about 1.2—3.0 V (depending on EGR valve lift)

PCM Inputs and Outputs at PCM Connector C (22P)

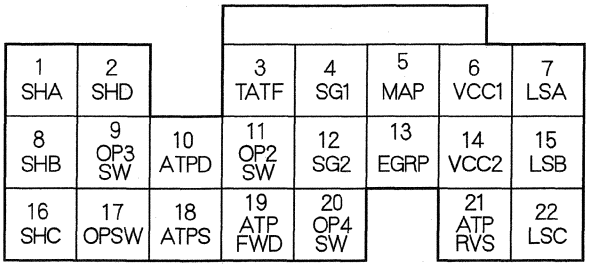

Wire side of female terminals

Terminal number	Wire color	Terminal name	Description	Signal
14	YEL/BLU	VCC2 (SENSOR VOLTAGE)	Provides sensor voltage	With ignition switch ON (II): about 5.0 V With ignition switch OFF: about 0 V
15	BRN/WHT	LSB (A/T CLUTCH PRESSURE CONTROL SOLENOID VALVE B)	Drives A/T clutch pressure control solenoid valve B	With ignition switch ON (II): pulses
16	GRN	SHC (SHIFT SOLENOID VALVE C)	Drives shift solenoid valve C	With engine running in D (in 1st, 3rd, and 5th gears) and S (in 1st, 3rd, and 5th gears): battery voltage With engine running in P, R, N, D (in 2nd and 4th gears), and S (in 2nd and 4th gears): about 0 V
17	YEL/RED	OPSW (OIL PRESSURE SWITCH)	Detects engine oil pressure signal	With ignition switch ON (II): about 5.0 V With engine running: about 0 V
18	RED	ATPS (TRANSMISSION RANGE SWITCH S)	Detects transmission range switch S signal	In S: about 0 V In any position other than S: battery voltage
19	BLU/YEL	ATPFWD (TRANSMISSION RANGE SWITCH FWD POSITION)	Detects transmission range switch signal D and S position input signal	In D and S: about 0 V In any other position D and S: battery voltage
20	BLU/YEL	OP4SW (4TH CLUTCH TRANSMISSION FLUID PRESSURE SWITCH)	Detects 4th clutch transmission fluid pressure switch input	With ignition switch ON (II): • Without 4th clutch pressure: about 5.0 V • With 4th clutch pressure: about 0 V
21	RED/WHT	ATPRVS (TRANSMISSION RANGE SWITCH RVS POSITION)	Detects transmission range switch P, R, and N position input signal	In P, R, and N: about 0 V In any other position P, R, and N: battery voltage
22	GRN/RED	LSC (A/T CLUTCH PRESSURE CONTROL SOLENOID VALVE C)	Drives A/T clutch pressure control solenoid valve C	With ignition switch ON (II): pulses

(cont'd)

System Description (cont'd)

PCM Inputs and Outputs at PCM Connector D (17P)

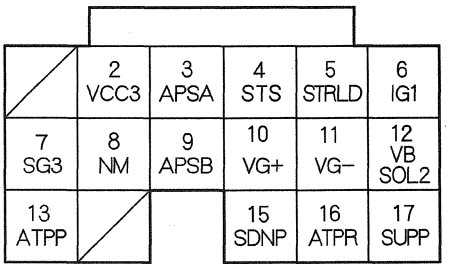

Wire side of female terminals

Terminal number	Wire color	Terminal name	Description	Signal
2	RED	VCC3 (SENSOR VOLTAGE)	Provides sensor voltage	With ignition switch ON (II): about 5.0 V With ignition switch OFF: about 0 V
3	PUR	APSA (ACCELERATOR PEDAL POSITION (APP) SENSOR A)	Detects APP sensor A signal	With ignition switch ON (II) and accelerator pedal pressed: about 4.5 V With ignition switch ON (II) and accelerator pedal released: about 1.0 V
4	LT BLU	STS (STARTER SWITCH SIGNAL)	Detects starter switch signal	With starter switch ON (III): battery voltage With starter switch OFF: about 0 V
5	PNK	STRLD (STARTER LOAD)	Detects starter cut relay 2 (ST CUT) voltage	With starter ON: battery voltage
6	YEL	IG1 (IGNITION SIGNAL)	Detects ignition signal	With ignition switch ON (II): battery voltage
7	WHT	SG3 (SENSOR GROUND)	Sensor ground	Less than 0.2 V at all times
8	RED	NM (INPUT SHAFT (MAINSHAFT) SPEED SENSOR)	Detects input shaft (mainshaft) speed sensor signals	With ignition switch ON (II): about 0 V or about 5.0 V With engine running in N: about 2.5 V
9	LT GRN	APSB (ACCELERATOR PEDAL POSITION (APP) SENSOR B)	Detects APP sensor B signal	With ignition switch ON (II) and accelerator pedal pressed: about 2.3 V With ignition switch ON (II) and accelerator pedal released: about 0.5 V
10	LT GRN	VG+ (MASS AIR FLOW (MAF) SENSOR +SIDE)	Detects MAF sensor signal	At idle: about 1.1—1.6 V (between VG+ terminal and VG— terminal)
11	PNK	VG— (MASS AIR FLOW (MAF) SENSOR —SIDE)	Ground for MAF sensor signal	
12	ORN	VBSOL2 (POWER SOURCE FOR SOLENOID VALVES)	Power source for solenoid valves	With ignition switch ON (II): battery voltage
13	GRN	ATPP (TRANSMISSION RANGE SWITCH P POSITION)	Detects transmission range switch P position input signal	In P: about 0 V In any position other than P: battery voltage
15	PUR	SDNP (PADDLE SHIFTER— (DOWNSHIFT SWITCH))	Detects paddle shifter— (downshift switch) signal	With ignition switch ON (II): • Paddle shifter— (downshift switch) pressed: about 0 V • Paddle shifter— (downshift switch) released: battery voltage
16	PUR	ATPR (TRANSMISSION RANGE SWITCH R POSITION)	Detects transmission range switch R position input signal	In R: about 0 V In any position other than R: battery voltage
17	BLU	SUPP (PADDLE SHIFTER+ (UPSHIFT SWITCH))	Detects paddle shifter+ (upshift switch) signal	With ignition switch ON (II): • Paddle shifter+ (upshift switch) pressed: about 0 V • Paddle shifter+ (upshift switch) released: battery voltage

PCM Inputs and Outputs at PCM Connector E (31P)

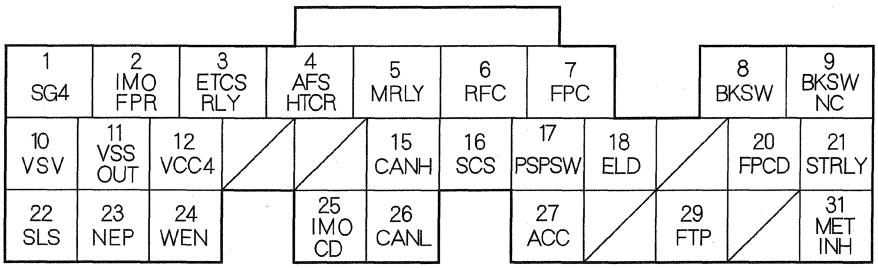

Wire side of female terminals

Terminal number	Wire color	Terminal name	Description	Signal
1	GRN	SG4 (SENSOR GROUND)	Sensor ground	Less than 0.2 V at all times
2	BRN	IMOFPR (IMMOBILIZER FUEL PUMP RELAY)	Drives PGM-FI main relay 2 (FUEL PUMP)	0 V for 2 seconds after turning ignition switch ON (II), then battery voltage
3	BLU	ETCSRLY (THROTTLE ACTUATOR CONTROL MODULE (DBW) RELAY)	Drives throttle actuator control module (DBW) relay	With ignition switch ON (II): about 0 V
4	PNK	AFSHTCR (AIR FUEL RATIO (A/F) SENSOR RELAY)	Drives A/F sensor relay	With ignition switch ON (II): about 0 V
5	GRN	MRLY (PGM-FI MAIN RELAY)	Drives PGM-FI main relay 1 (FI MAIN) Power source for DTC memory	With ignition switch ON (II): about 0 V With ignition switch OFF: battery voltage
6	LT BLU	RFC (RADIATOR FAN CONTROL UNIT)	Drives radiator fan control unit	With ignition switch ON (II): about 0 V
7	PNK	FPC (FUEL PUMP CONTROL)	Detects fuel pump control signal	With ignition switch ON (II): pulses With ignition switch OFF: about 0 V
8	LT GRN	BKSW (BRAKE PEDAL POSITION SWITCH)	Detects brake pedal position switch signal	With brake pedal released: about 0 V With brake pedal pressed: battery voltage
9	BRN	BKSWNC (BRAKE PEDAL POSITION SWITCH)	Detects brake pedal position switch signal	With ignition switch ON (II) and brake pedal released: battery voltage With ignition switch ON (II) and brake pedal pressed: about 0 V
10	LT GRN	VSV (EVAPORATIVE EMISSION (EVAP) CANISTER VENT SHUT VALVE)	Drives EVAP canister vent shut valve	With ignition switch ON (II): battery voltage
11	BRN	VSSOUT (VEHICLE SPEED SENSOR OUTPUT SIGNAL)	Sends vehicle speed sensor signal	Depending on vehicle speed: pulses
12	GRY	VCC4 (SENSOR VOLTAGE)	Provides sensor voltage	With ignition switch ON (II): about 5.0 V With ignition switch OFF: about 0 V
15	WHT	CANH (CAN COMMUNICATION SIGNAL HIGH)	Sends communication signal	With ignition switch ON (II): pulses

(cont'd)

System Description (cont'd)

PCM Inputs and Outputs at PCM Connector E (31P)

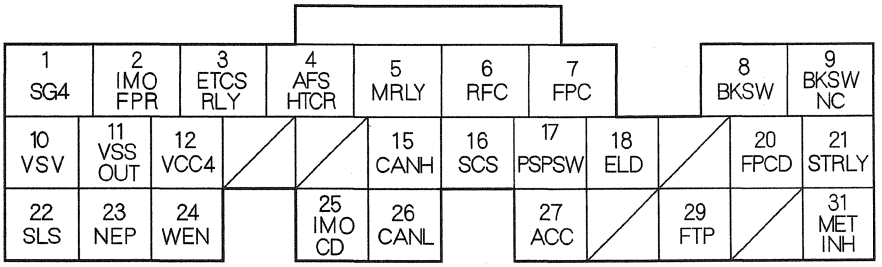

Wire side of female terminals

Terminal number	Wire color	Terminal name	Description	Signal
16	BRN	SCS (SERVICE CHECK SIGNAL)	Detects service check signal	With service check signal shorted using the HDS: about 0 V With service check signal opened: about 5.0 V
17	PNK	PSPSW (POWER STEERING PRESSURE SWITCH SIGNAL)	Detects PSP switch signal	At idle with steering wheel in straight ahead position: about 0 V At idle with steering wheel at full lock: battery voltage
18	ORN	ELD (ELECTRICAL LOAD DETECTOR (ELD))	Detects ELD signal	With ignition switch ON (II): about 0.1—4.8 V (depending on electrical load)
20	LT BLU	FPCD (FUEL PUMP CONTROL MODULE DIAGNOSIS)	Detect fuel pump control diagnosis	With ignition switch ON (II): about 0 V At idle: about 10.0 V
21	LT GRN	STRLY (STARTER CUT RELAY)	Drives starter cut relay 2 (ST CUT)	With ignition switch ON (II): about 0 V
22	PNK	SLS (SHIFT LOCK SOLENOID)	Drives shift lock solenoid	With ignition switch ON (II), in P, brake pedal pressed, and accelerator released: about 0 V
23	PNK	NEP (ENGINE SPEED PULSE)	Outputs engine speed pulse	With engine running: pulses
24	RED	WEN (WRITE ENABLE SIGNAL)	Detects write enable signal	With ignition switch ON (II): about 0 V
25	ORN	IMOCD (IMMOBILIZER CODE)	Detects immobilizer signal	
26	RED	CANL (CAN COMMUNICATION SIGNAL LOW)	Sends communication signal	With ignition switch ON (II): pulses
27	RED	ACC (A/C COMPRESSOR CLUTCH RELAY)	Drives A/C compressor clutch relay	With compressor ON: about 0 V With compressor OFF: battery voltage
29	LT GRN	FTP (FUEL TANK PRESSURE (FTP) SENSOR)	Detects FTP sensor signal	With ignition switch ON (II) and fuel fill cap removed: about 2.5 V
31	GRN	METINH (METER DISPLAY INHIBIT SIGNAL)	Sends A/T shift position inhibit signal	With ignition switch ON (II): about 10.0 V

PCM Electrical Connections

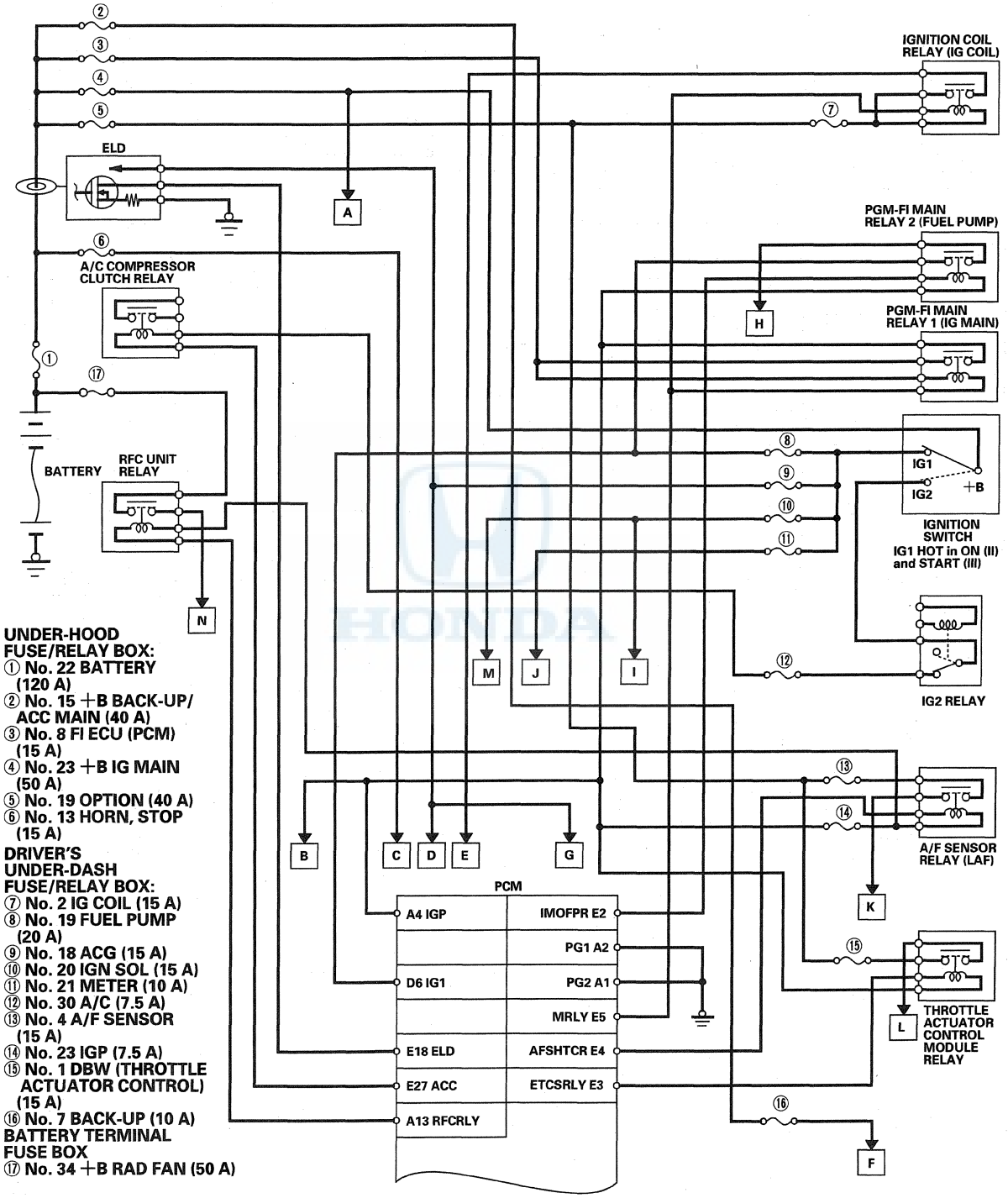

UNDER-HOOD FUSE/RELAY BOX:
① No. 22 BATTERY (120 A)
② No. 15 +B BACK-UP/ ACC MAIN (40 A)
③ No. 8 FI ECU (PCM) (15 A)
④ No. 23 +B IG MAIN (50 A)
⑤ No. 19 OPTION (40 A)
⑥ No. 13 HORN, STOP (15 A)

DRIVER'S UNDER-DASH FUSE/RELAY BOX:
⑦ No. 2 IG COIL (15 A)
⑧ No. 19 FUEL PUMP (20 A)
⑨ No. 18 ACG (15 A)
⑩ No. 20 IGN SOL (15 A)
⑪ No. 21 METER (10 A)
⑫ No. 30 A/C (7.5 A)
⑬ No. 4 A/F SENSOR (15 A)
⑭ No. 23 IGP (7.5 A)
⑮ No. 1 DBW (THROTTLE ACTUATOR CONTROL) (15 A)
⑯ No. 7 BACK-UP (10 A)

BATTERY TERMINAL FUSE BOX
⑰ No. 34 +B RAD FAN (50 A)

(cont'd)

System Description (cont'd)

PCM Electrical Connections (cont'd)

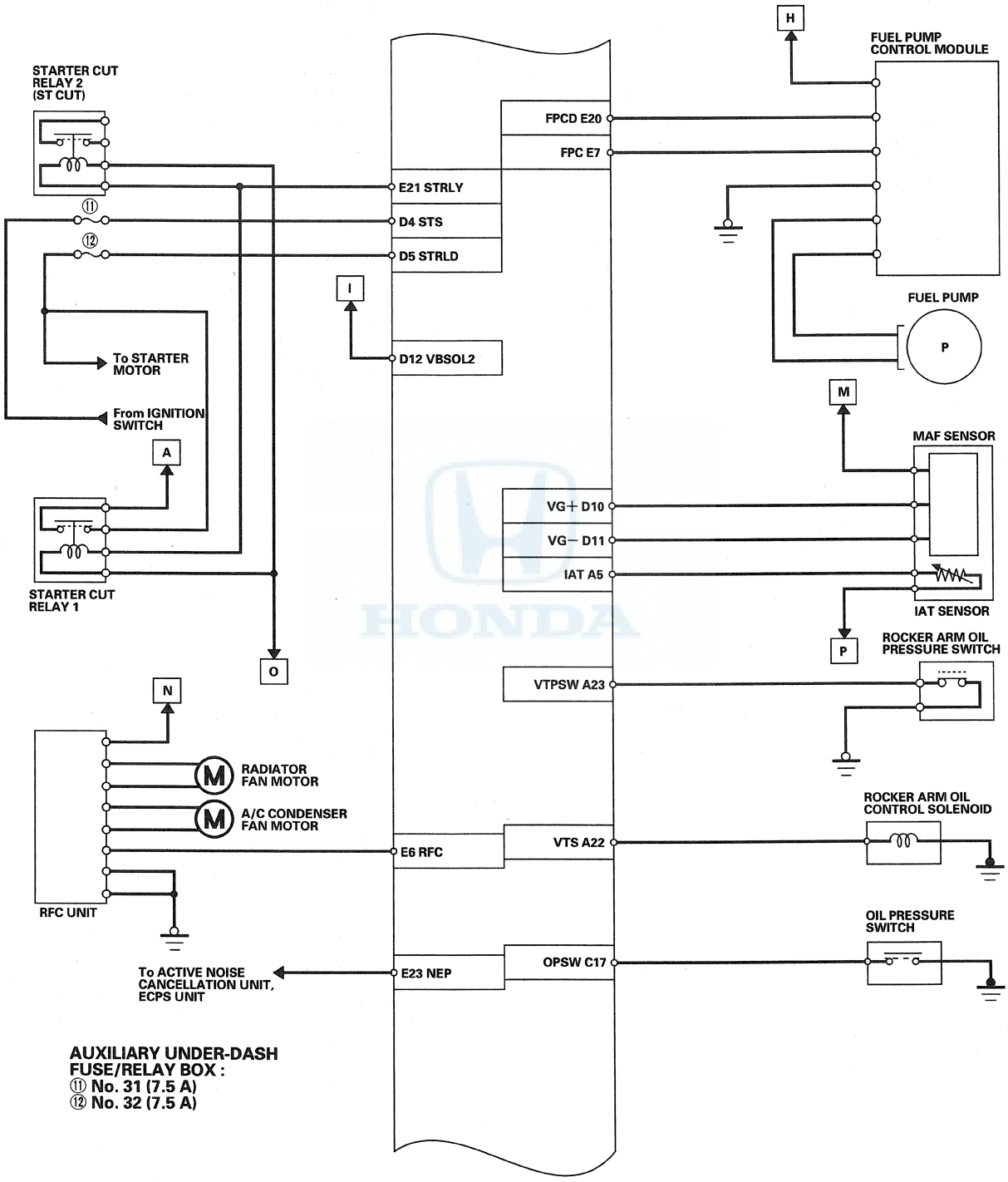

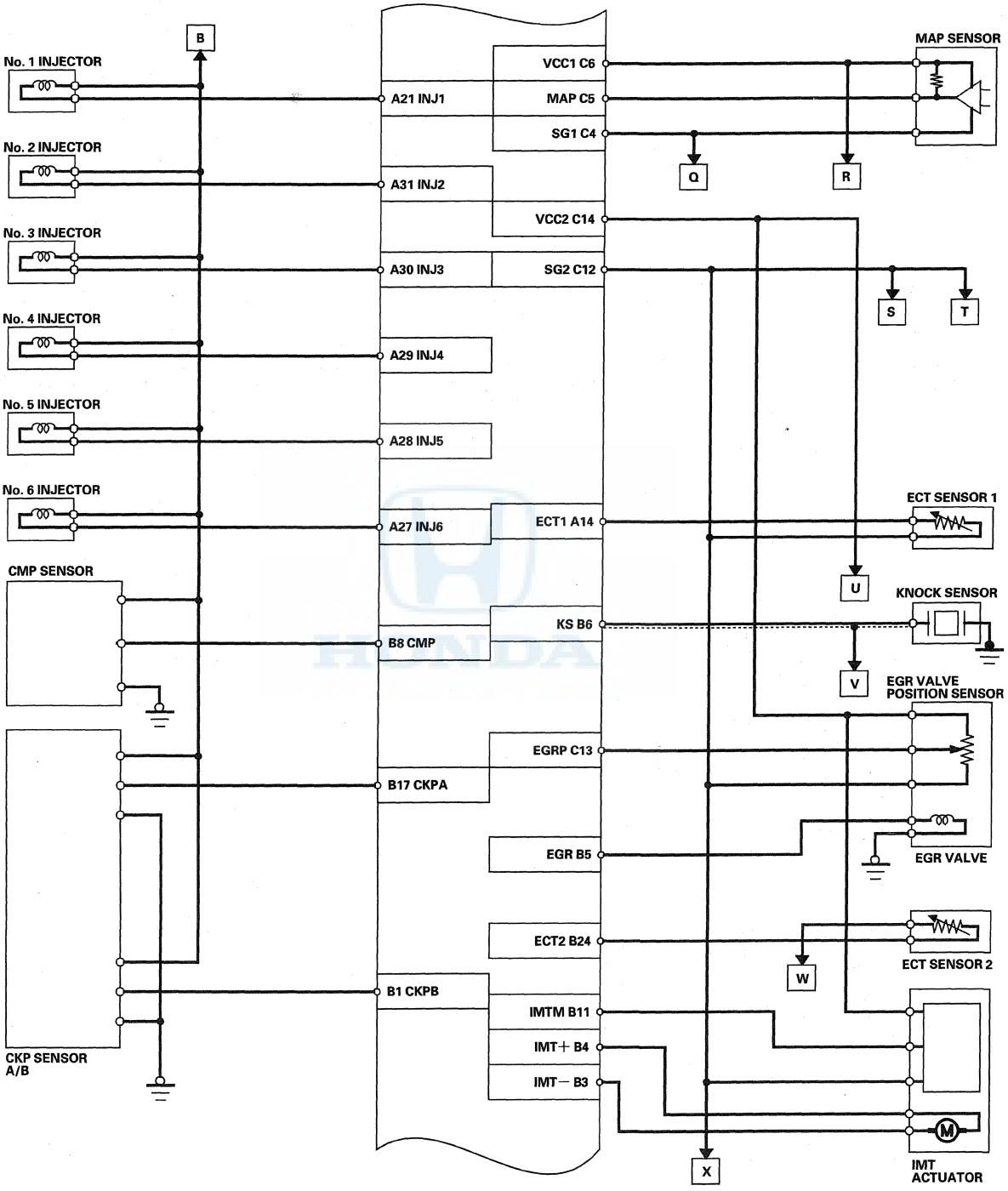
No. 1 INJECTOR
No. 2 INJECTOR
No. 3 INJECTOR
No. 4 INJECTOR
No. 5 INJECTOR
No. 6 INJECTOR
CMP SENSOR
CKP SENSOR A/B
B
A21 INJ1
A31 INJ2
A30 INJ3
A29 INJ4
A28 INJ5
A27 INJ6
B8 CMP
B17 CKPA
B1 CKPB
VCC1 C6
MAP C5
SG1 C4
VCC2 C14
SG2 C12
ECT1 A14
KS B6
EGRP C13
EGR B5
ECT2 B24
IMTM B11
IMT+ B4
IMT− B3
MAP SENSOR
Q
R
S
T
ECT SENSOR 1
U
KNOCK SENSOR
V
EGR VALVE POSITION SENSOR
EGR VALVE
W
ECT SENSOR 2
M
IMT ACTUATOR
X

(cont'd)

System Description (cont'd)

PCM Electrical Connections (cont'd)

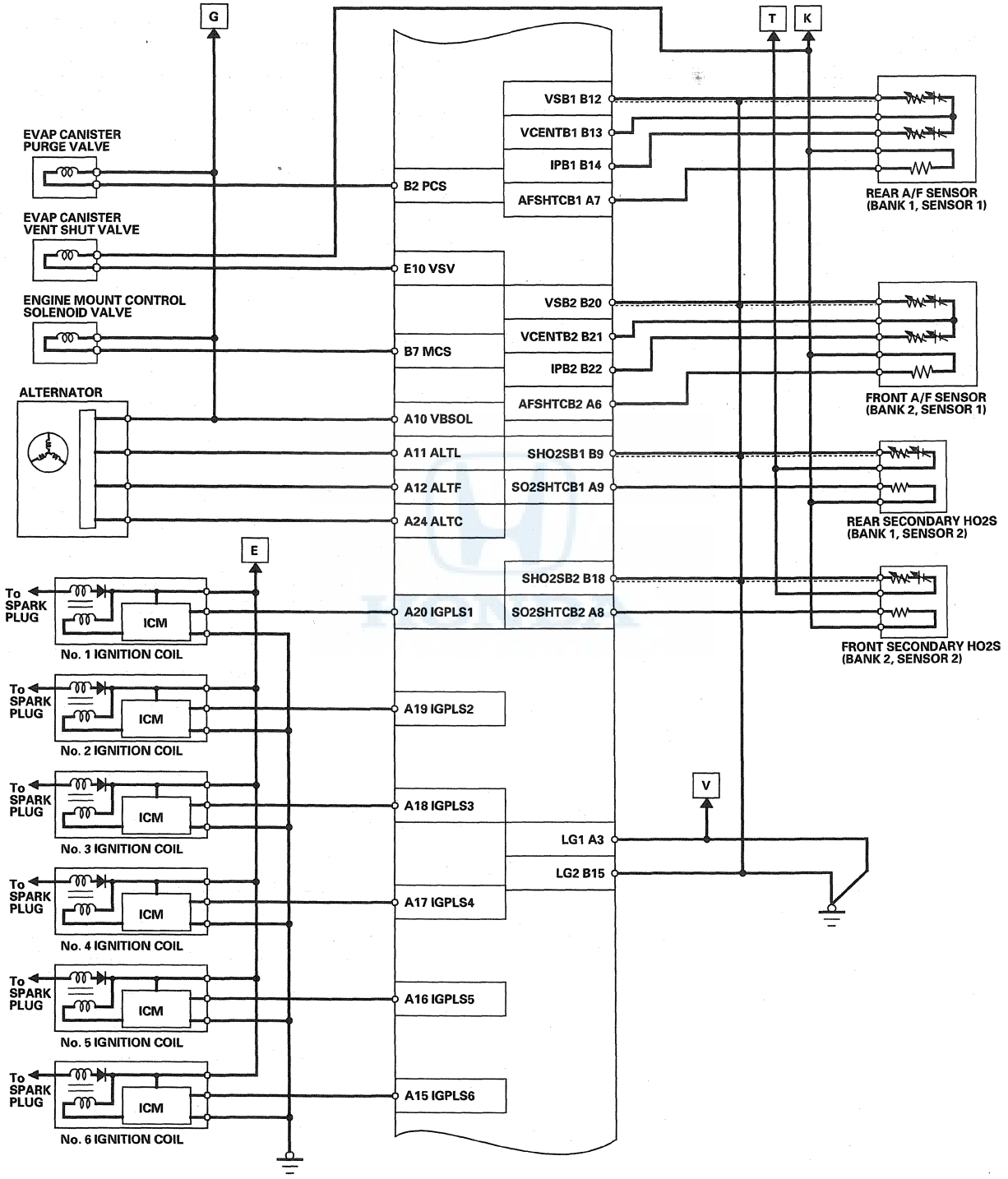

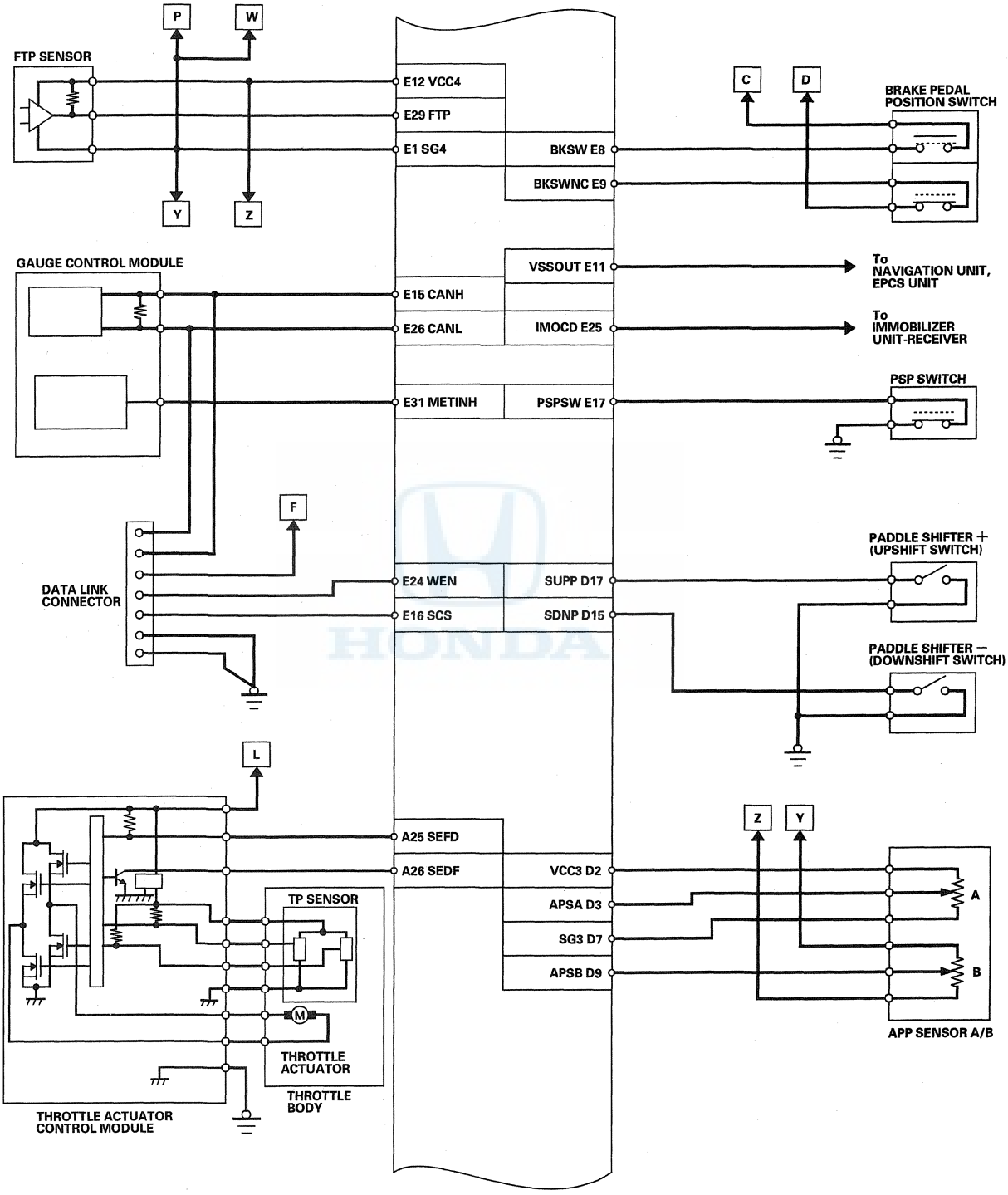
FTP SENSOR
P
W
Y
Z
E12 VCC4
E29 FTP
E1 SG4
C
D
BRAKE PEDAL POSITION SWITCH
BKSW E8
BKSWNC E9
GAUGE CONTROL MODULE
VSSOUT E11
To NAVIGATION UNIT, EPCS UNIT
E15 CANH
E26 CANL
IMOCD E25
To IMMOBILIZER UNIT-RECEIVER
PSP SWITCH
E31 METINH
PSPSW E17
F
DATA LINK CONNECTOR
PADDLE SHIFTER + (UPSHIFT SWITCH)
E24 WEN
SUPP D17
E16 SCS
SDNP D15
PADDLE SHIFTER − (DOWNSHIFT SWITCH)
L
A25 SEFD
A26 SEDF
VCC3 D2
APSA D3
SG3 D7
APSB D9
TP SENSOR
THROTTLE ACTUATOR
THROTTLE BODY
THROTTLE ACTUATOR CONTROL MODULE
APP SENSOR A/B
A
B

(cont'd)

System Description (cont'd)

PCM Electrical Connections (cont'd)

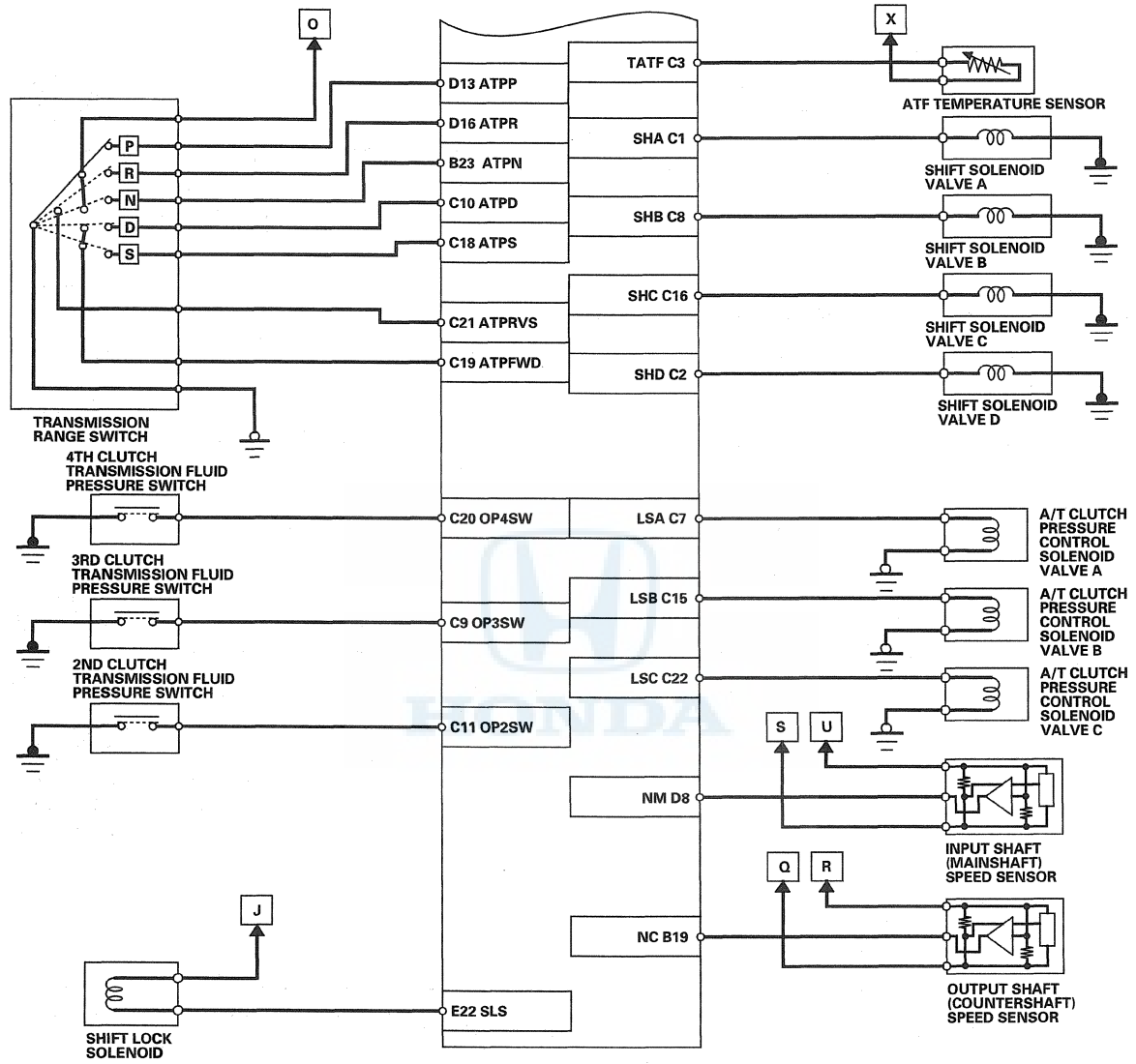

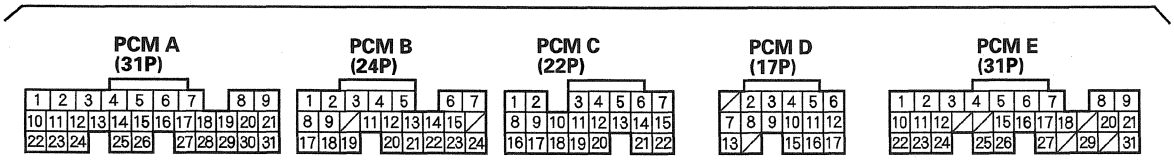

TERMINAL LOCATIONS

PCM Circuit Diagram

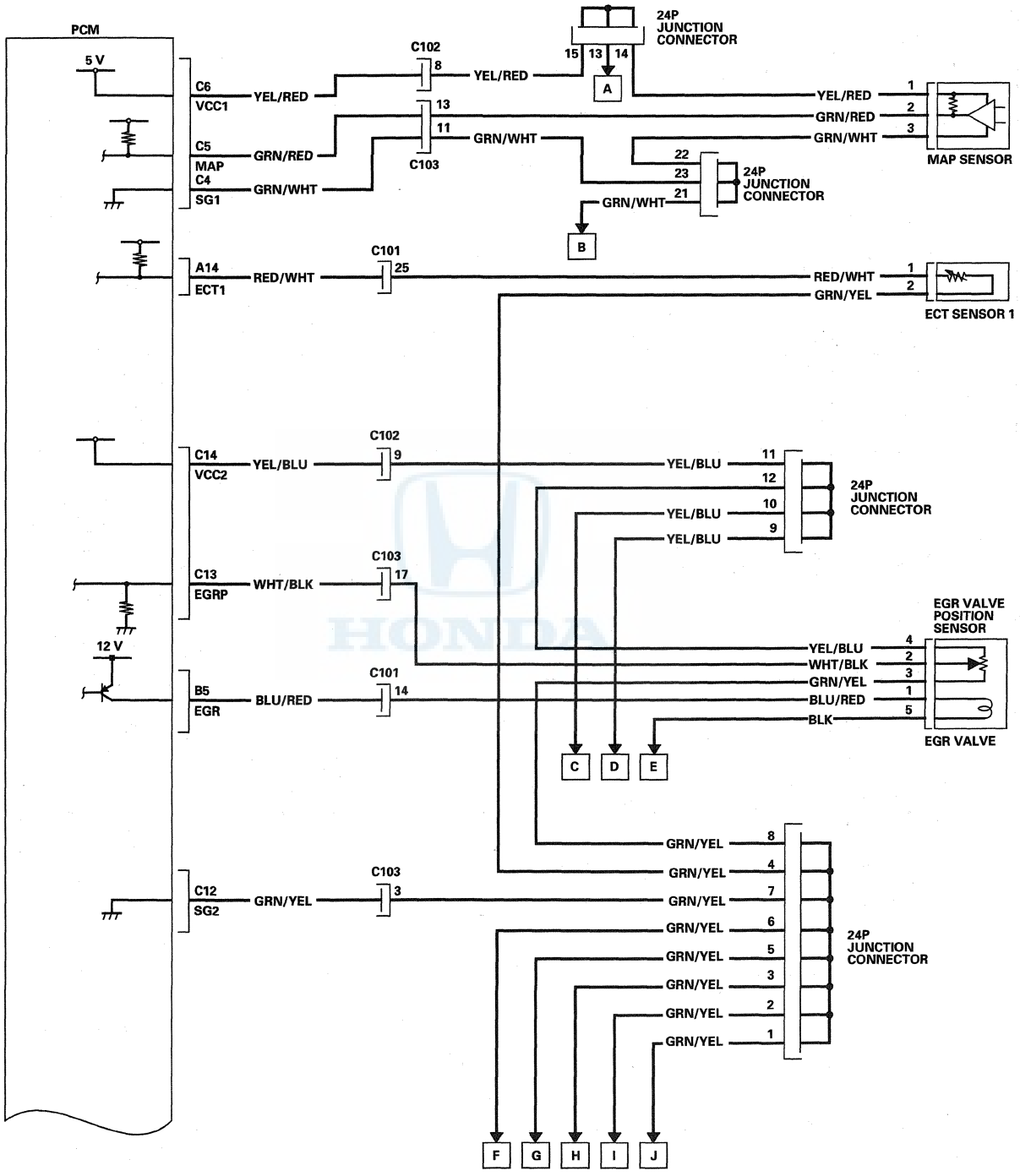

(cont'd)

System Description (cont'd)

PCM Circuit Diagram (cont'd)

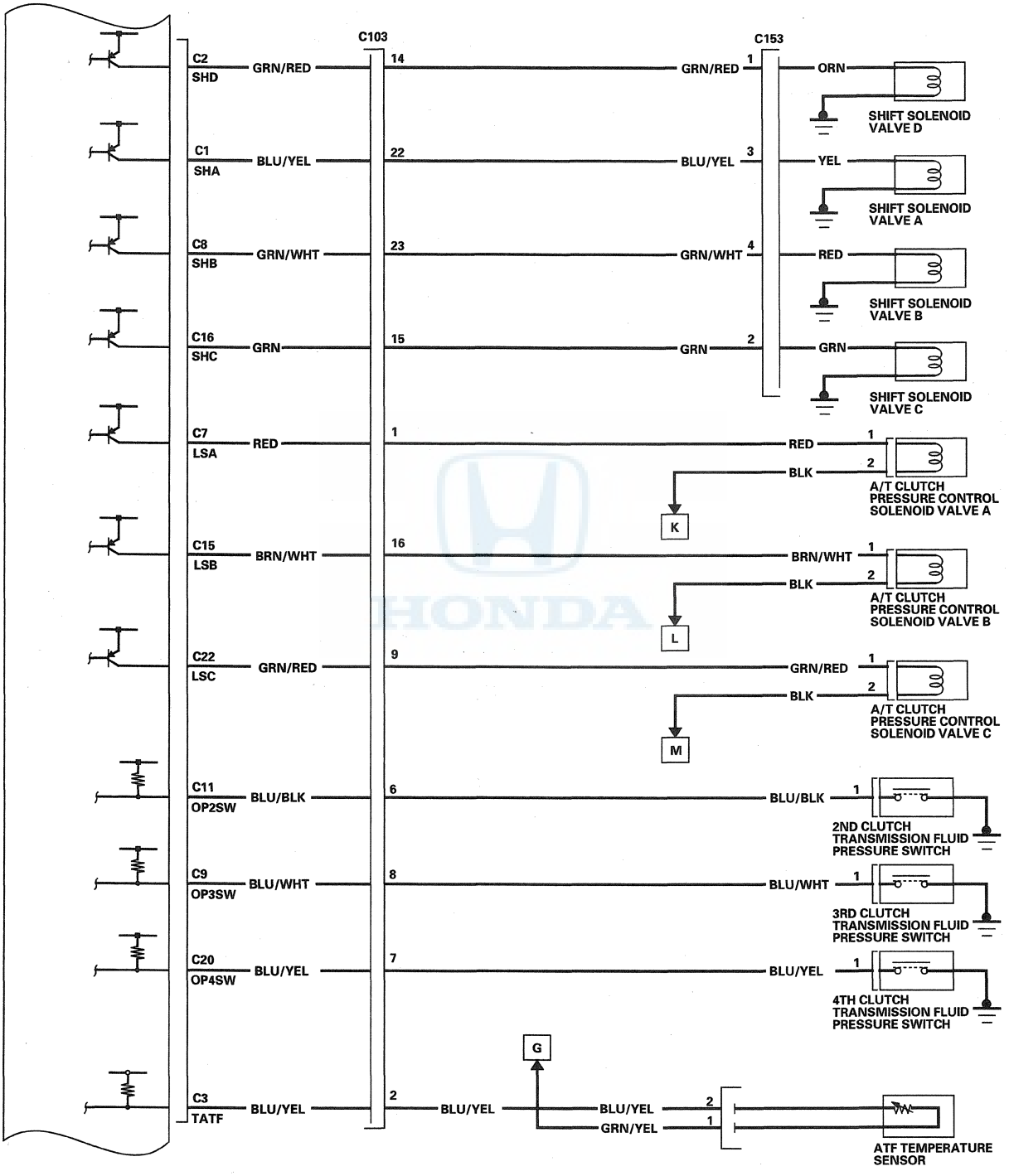

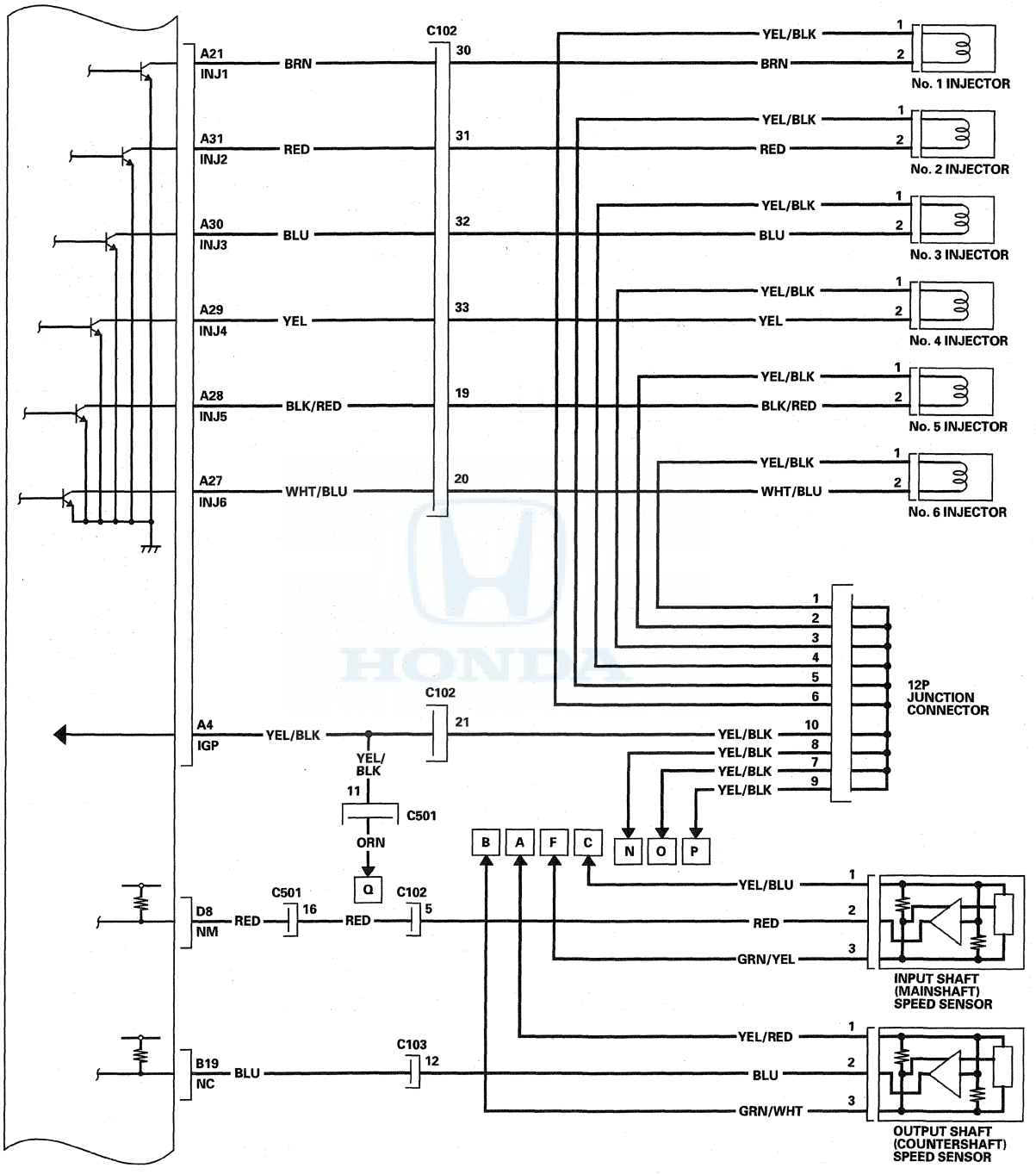
A21
INJ1
BRN
C102
30
YEL/BLK
BRN
No. 1 INJECTOR
A31
INJ2
RED
31
YEL/BLK
RED
No. 2 INJECTOR
A30
INJ3
BLU
32
YEL/BLK
BLU
No. 3 INJECTOR
A29
INJ4
YEL
33
YEL/BLK
YEL
No. 4 INJECTOR
A28
INJ5
BLK/RED
19
YEL/BLK
BLK/RED
No. 5 INJECTOR
A27
INJ6
WHT/BLU
20
YEL/BLK
WHT/BLU
No. 6 INJECTOR
12P
JUNCTION
CONNECTOR
A4
IGP
YEL/BLK
C102
21
YEL/BLK
YEL/
BLK
11
C501
ORN
Q
B
A
F
C
N
O
P
D8
NM
RED
C501
16
RED
C102
5
YEL/BLU
RED
GRN/YEL
INPUT SHAFT
(MAINSHAFT)
SPEED SENSOR
B19
NC
BLU
C103
12
YEL/RED
BLU
GRN/WHT
OUTPUT SHAFT
(COUNTERSHAFT)
SPEED SENSOR

(cont'd)

System Description (cont'd)

PCM Circuit Diagram (cont'd)

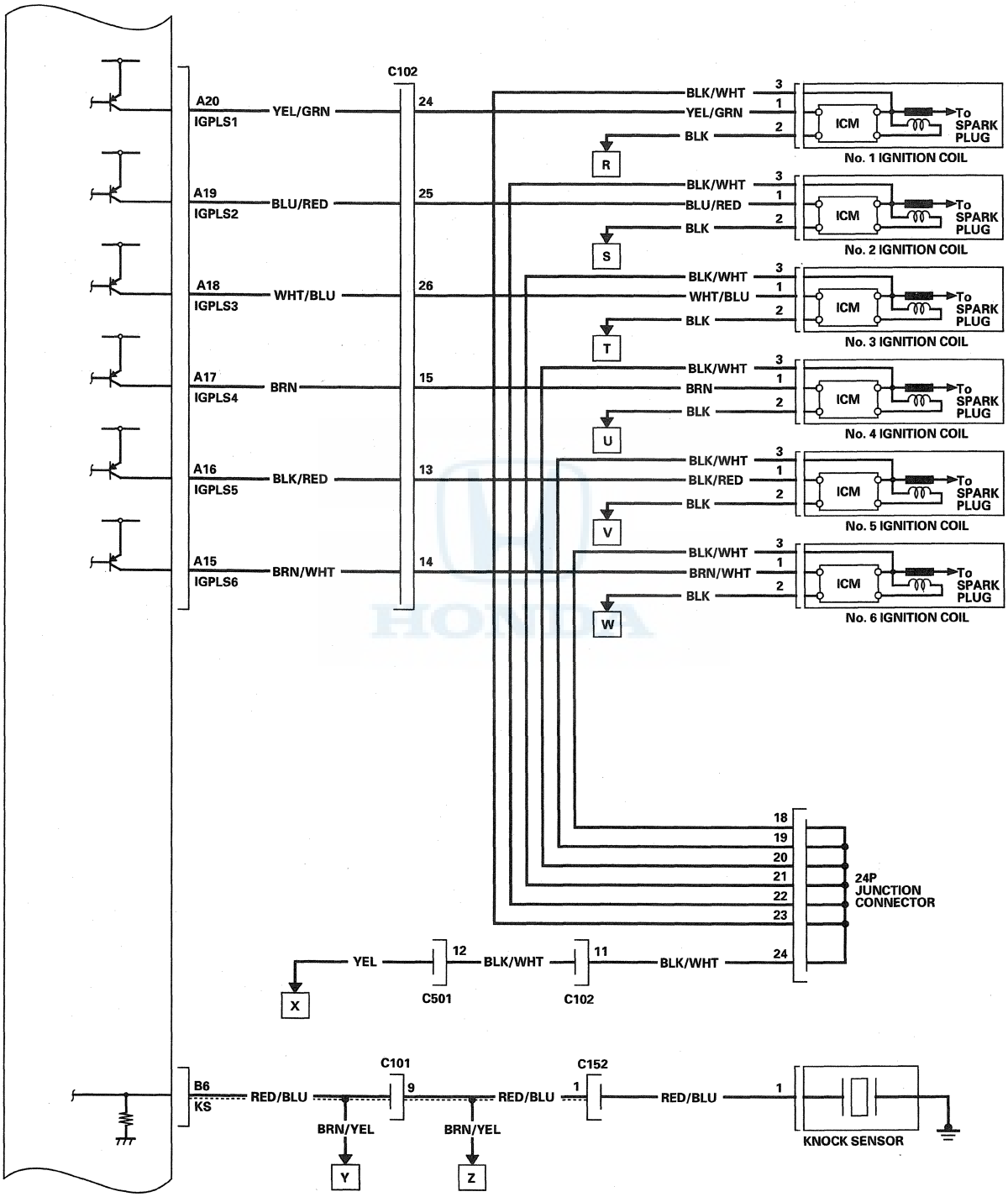

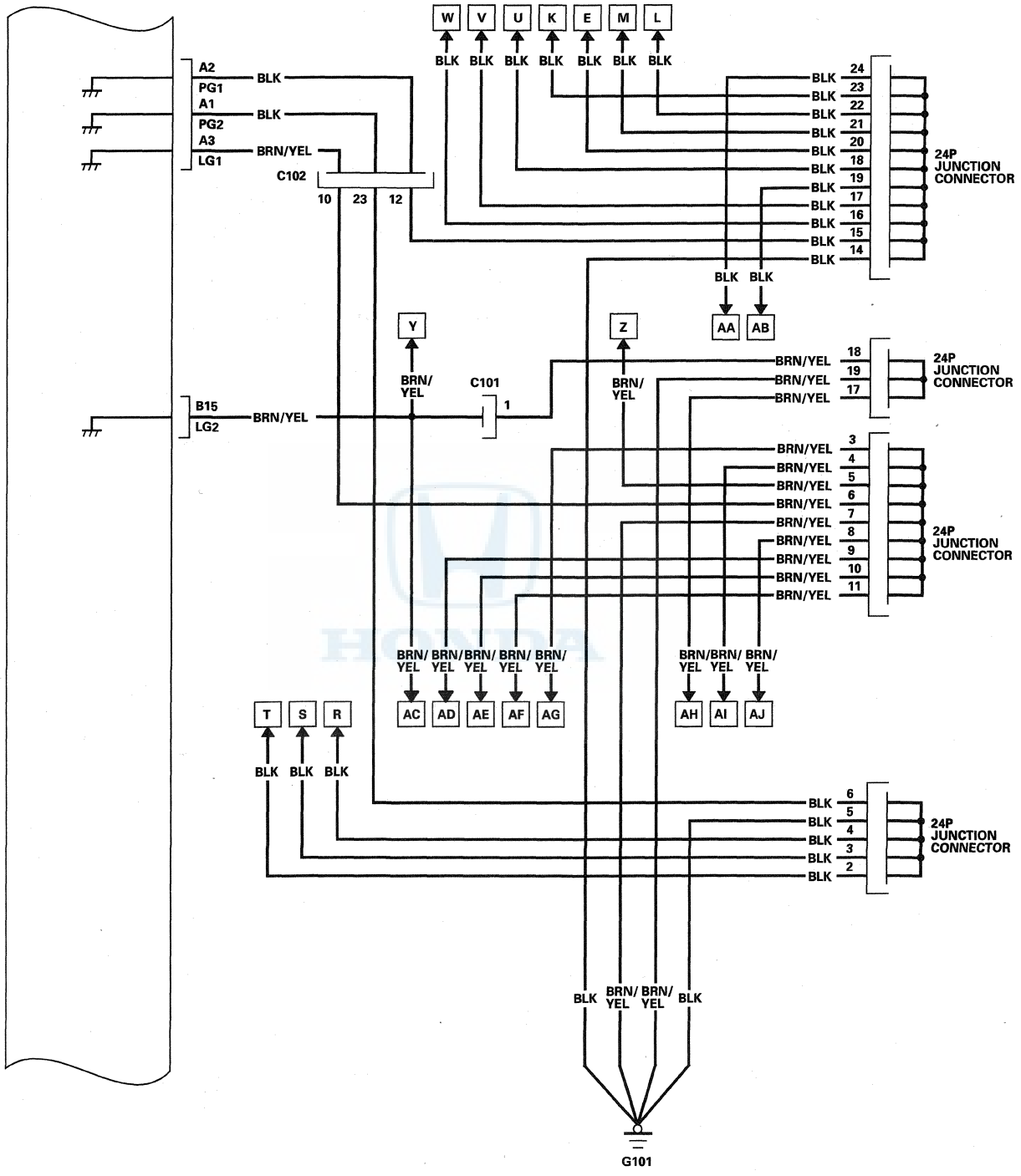
W V U K E M L
BLK BLK BLK BLK BLK BLK BLK
A2
PG1
A1
PG2
A3
LG1
BLK
BLK
BRN/YEL
C102
10 23 12
24P JUNCTION CONNECTOR
AA AB
Y
Z
BRN/YEL
C101
1
B15
LG2
BRN/YEL
24P JUNCTION CONNECTOR
24P JUNCTION CONNECTOR
AC AD AE AF AG
AH AI AJ
T S R
BLK BLK BLK
24P JUNCTION CONNECTOR
BLK BRN/YEL BRN/YEL BLK
G101

(cont'd)

System Description (cont'd)

PCM Circuit Diagram (cont'd)

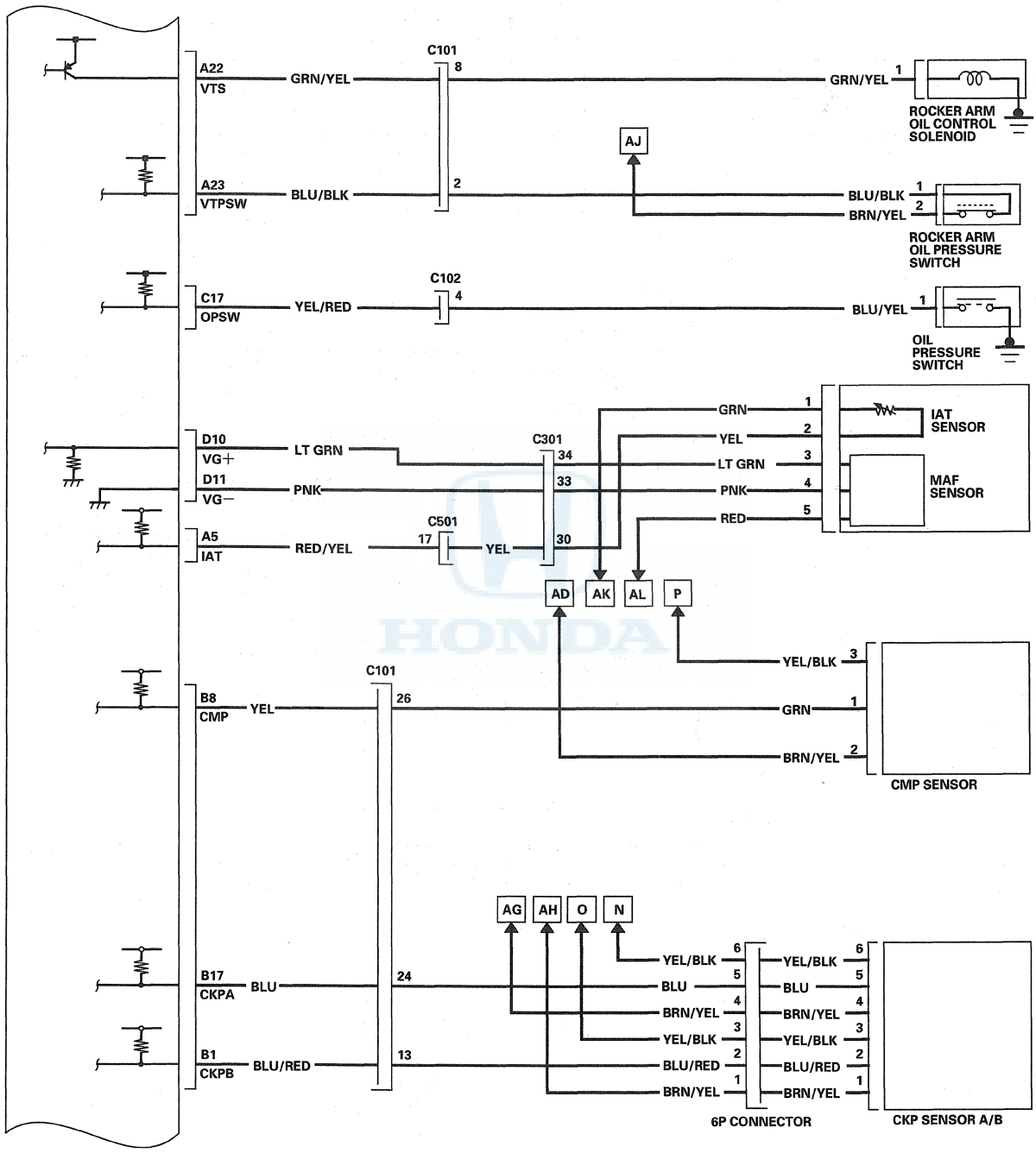

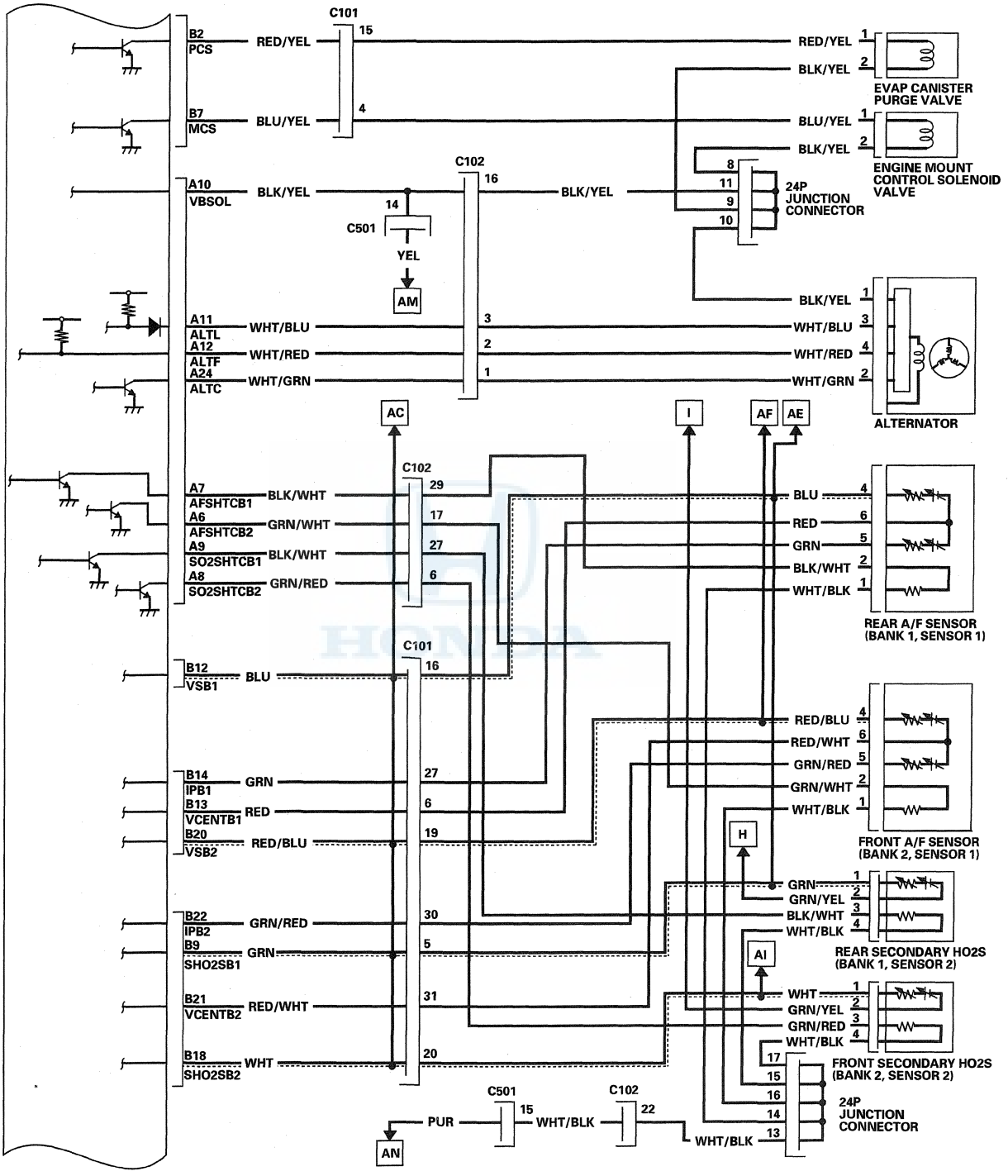
C101
B2
PCS
RED/YEL
15
RED/YEL
1
BLK/YEL
2
EVAP CANISTER PURGE VALVE
B7
MCS
BLU/YEL
4
BLU/YEL
1
BLK/YEL
2
ENGINE MOUNT CONTROL SOLENOID VALVE
C102
16
A10
VBSOL
BLK/YEL
C501
14
YEL
AM
BLK/YEL
8
11
9
10
24P JUNCTION CONNECTOR
BLK/YEL
1
A11
ALTL
WHT/BLU
3
WHT/BLU
3
A12
ALTF
WHT/RED
2
WHT/RED
4
A24
ALTC
WHT/GRN
1
WHT/GRN
2
ALTERNATOR
AC
I
AF
AE
C102
A7
AFSHTCB1
BLK/WHT
29
BLU
4
A6
AFSHTCB2
GRN/WHT
17
RED
6
A9
SO2SHTCB1
BLK/WHT
27
GRN
5
A8
SO2SHTCB2
GRN/RED
6
BLK/WHT
2
WHT/BLK
1
REAR A/F SENSOR (BANK 1, SENSOR 1)
C101
B12
VSB1
BLU
16
RED/BLU
4
RED/WHT
6
GRN/RED
5
GRN/WHT
2
WHT/BLK
1
FRONT A/F SENSOR (BANK 2, SENSOR 1)
B14
IPB1
GRN
27
B13
VCENTB1
RED
6
B20
VSB2
RED/BLU
19
H
GRN
1
GRN/YEL
2
BLK/WHT
3
WHT/BLK
4
REAR SECONDARY HO2S (BANK 1, SENSOR 2)
B22
IPB2
GRN/RED
30
B9
SHO2SB1
GRN
5
AI
B21
VCENTB2
RED/WHT
31
WHT
1
GRN/YEL
2
GRN/RED
3
WHT/BLK
4
FRONT SECONDARY HO2S (BANK 2, SENSOR 2)
B18
SHO2SB2
WHT
20
17
15
16
14
13
24P JUNCTION CONNECTOR
C501
15
C102
22
PUR
WHT/BLK
WHT/BLK
AN

(cont'd)

System Description (cont'd)

PCM Circuit Diagram (cont'd)

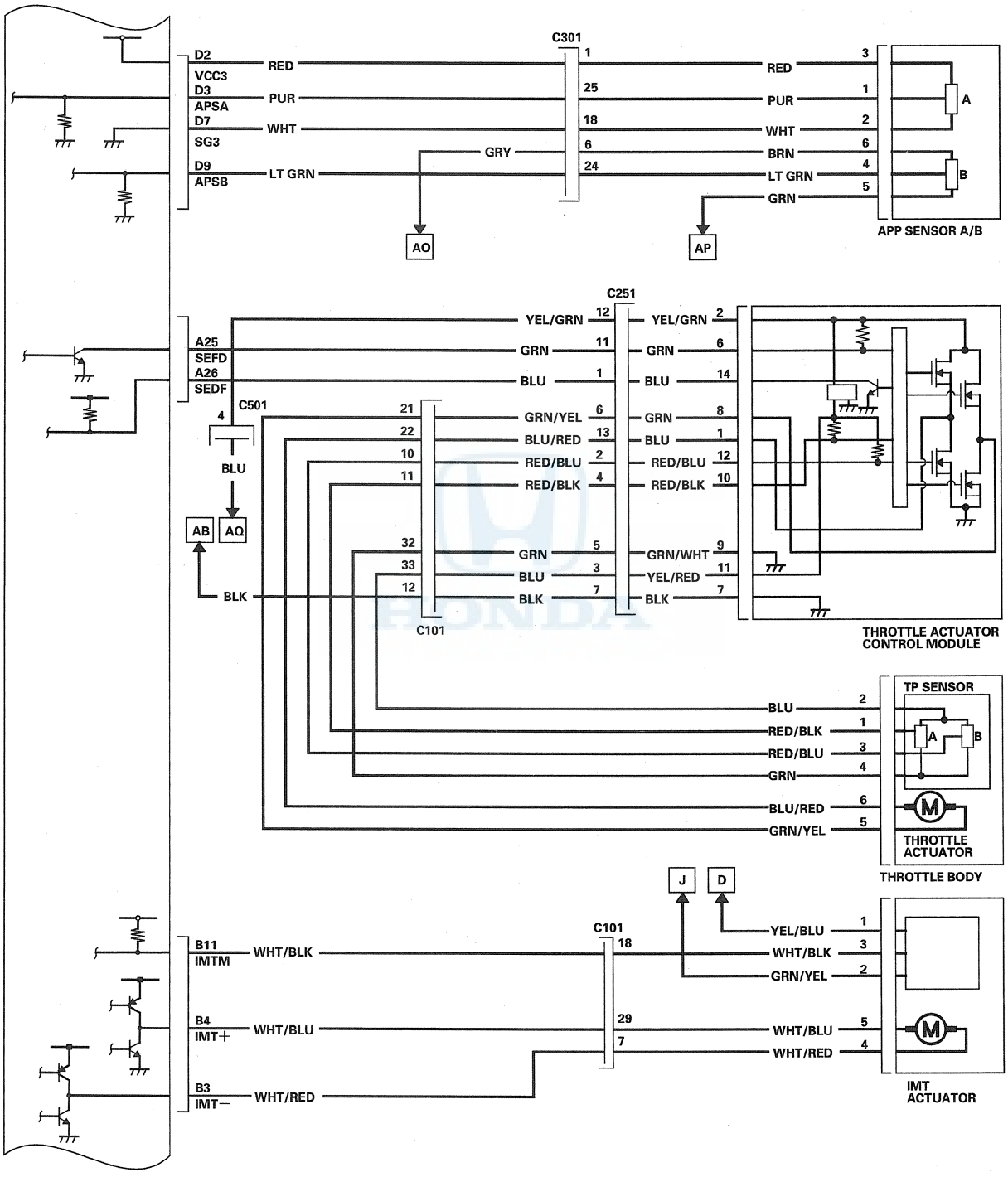

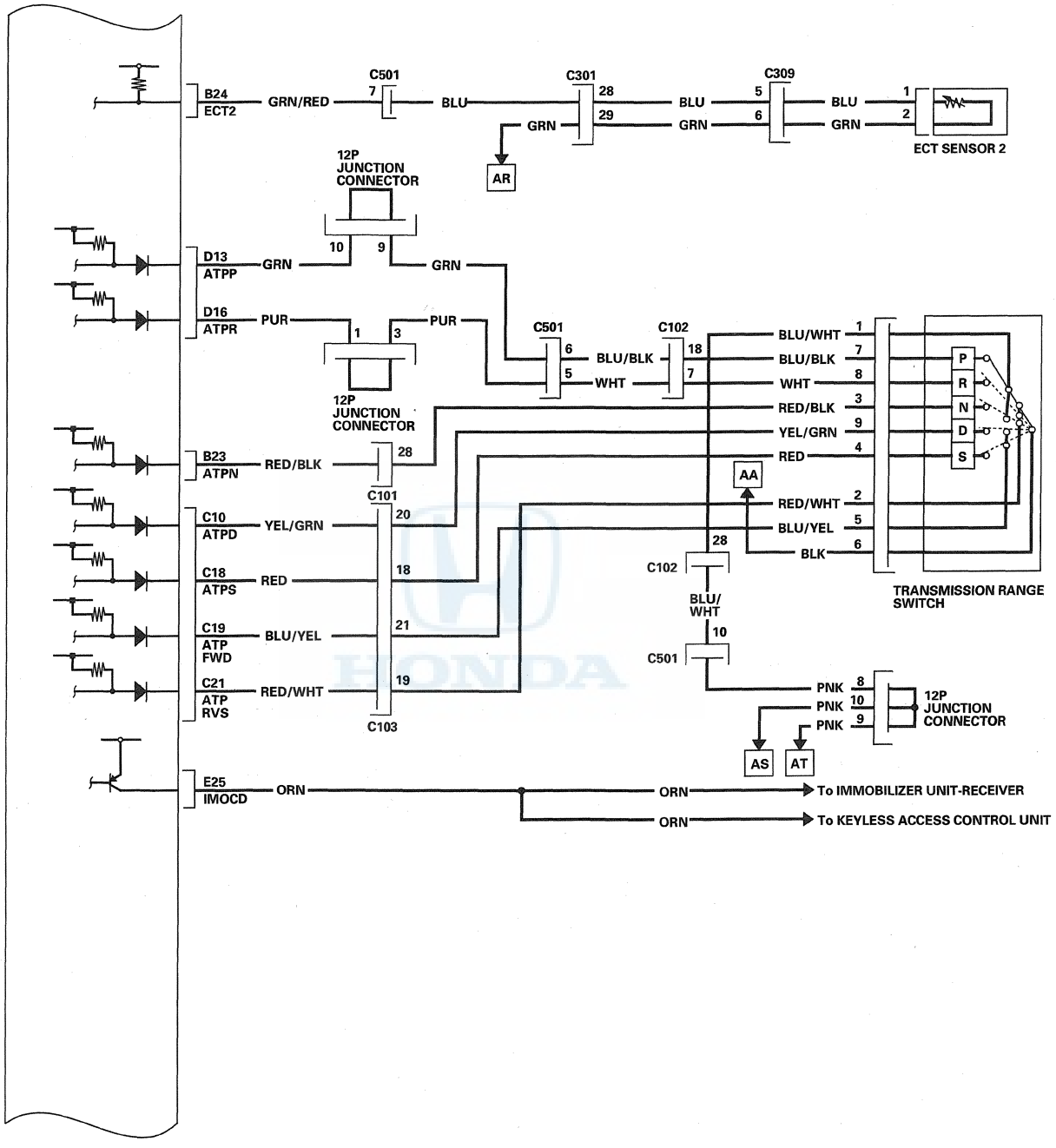
B24
ECT2
GRN/RED
C501
7
BLU
C301
28
29
BLU
GRN
C309
5
6
BLU
GRN
1
2
ECT SENSOR 2
AR
12P JUNCTION CONNECTOR
10
9
GRN
D13
ATPP
GRN
D16
ATPR
PUR
1
3
PUR
12P JUNCTION CONNECTOR
C501
6
5
BLU/BLK
WHT
C102
18
7
BLU/WHT 1
BLU/BLK 7
WHT 8
RED/BLK 3
YEL/GRN 9
RED 4
P
R
N
D
S
B23
ATPN
RED/BLK
28
C101
C10
ATPD
YEL/GRN
20
C18
ATPS
RED
18
C19
ATP FWD
BLU/YEL
21
C21
ATP RVS
RED/WHT
19
C103
AA
RED/WHT 2
BLU/YEL 5
BLK 6
C102
28
BLU/WHT
10
C501
TRANSMISSION RANGE SWITCH
PNK 8
PNK 10
PNK 9
12P JUNCTION CONNECTOR
AS
AT
E25
IMOCD
ORN
ORN
To IMMOBILIZER UNIT-RECEIVER
ORN
To KEYLESS ACCESS CONTROL UNIT

(cont'd)

System Description (cont'd)

PCM Circuit Diagram (cont'd)

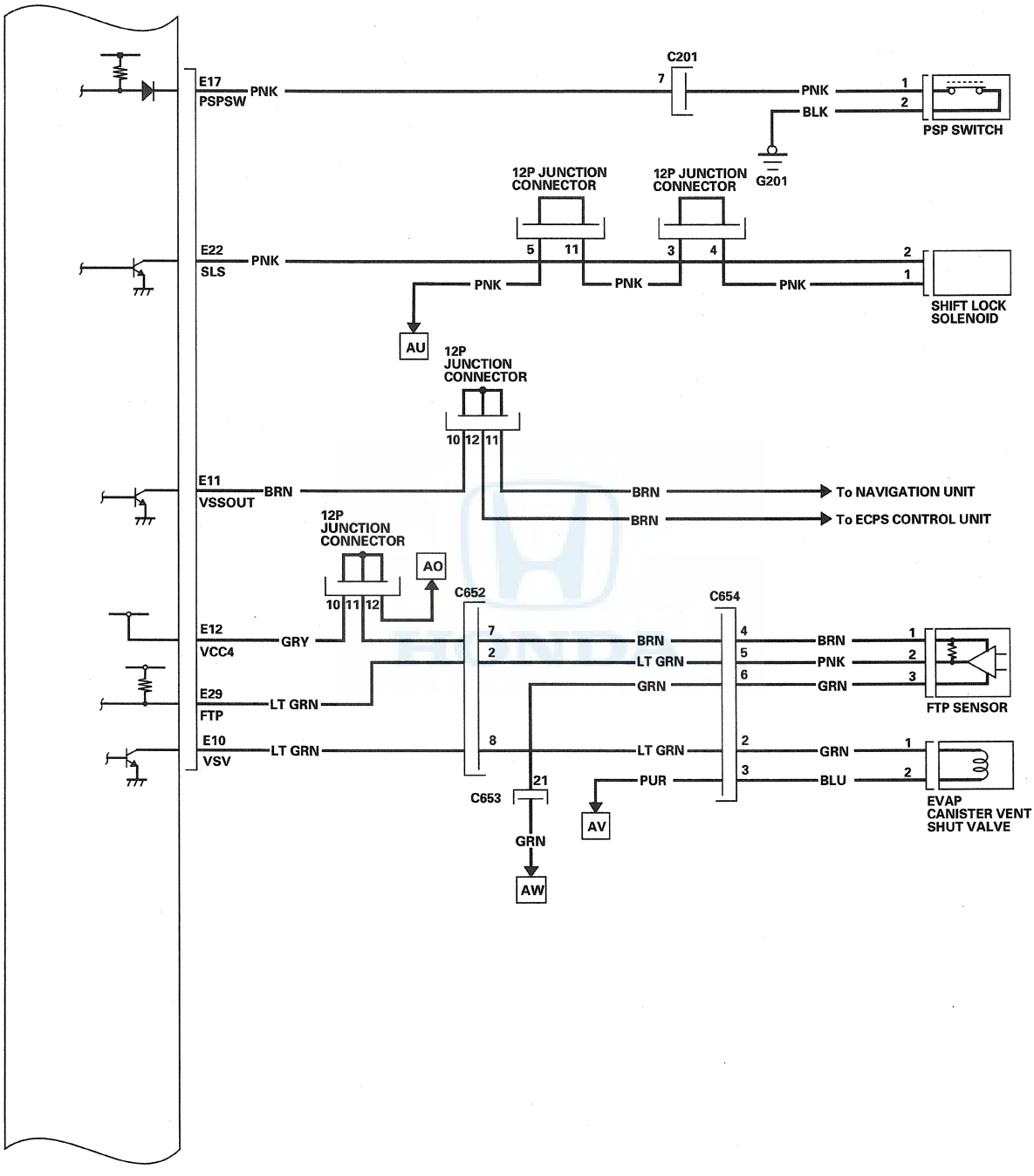

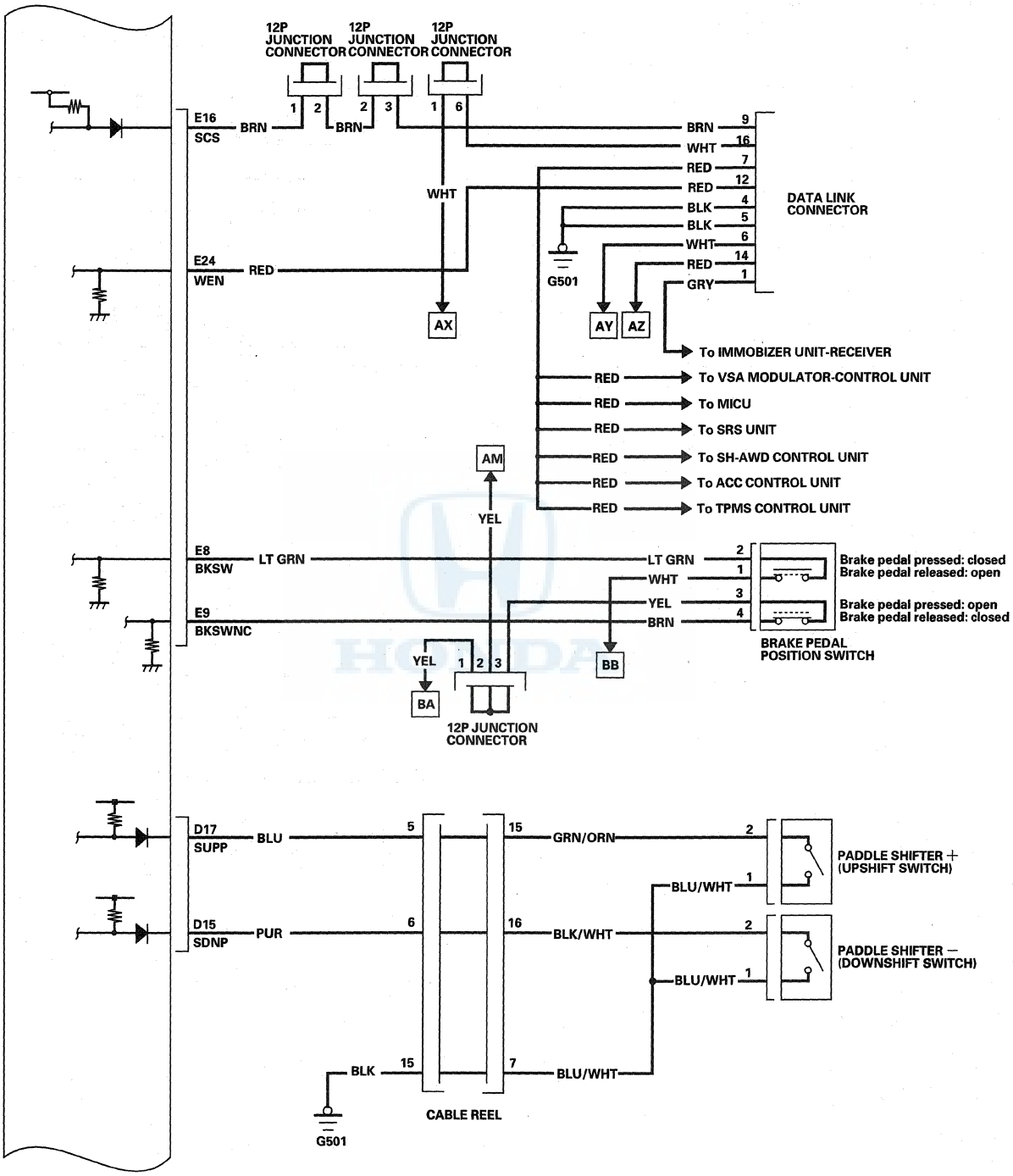
12P JUNCTION CONNECTOR
12P JUNCTION CONNECTOR
12P JUNCTION CONNECTOR
E16
SCS
BRN
E24
WEN
RED
WHT
AX
G501
AY
AZ
DATA LINK CONNECTOR
BRN 9
WHT 16
RED 7
RED 12
BLK 4
BLK 5
WHT 6
RED 14
GRY 1
To IMMOBIZER UNIT-RECEIVER
RED To VSA MODULATOR-CONTROL UNIT
RED To MICU
RED To SRS UNIT
RED To SH-AWD CONTROL UNIT
RED To ACC CONTROL UNIT
RED To TPMS CONTROL UNIT
AM
YEL
E8
BKSW
LT GRN
E9
BKSWNC
LT GRN 2
WHT 1
YEL 3
BRN 4
Brake pedal pressed: closed
Brake pedal released: open
Brake pedal pressed: open
Brake pedal released: closed
BRAKE PEDAL POSITION SWITCH
BB
BA
12P JUNCTION CONNECTOR
D17
SUPP
BLU
D15
SDNP
PUR
5
6
15
16
GRN/ORN
BLK/WHT
BLU/WHT
PADDLE SHIFTER + (UPSHIFT SWITCH)
PADDLE SHIFTER – (DOWNSHIFT SWITCH)
BLK
7
CABLE REEL
G501

(cont'd)

System Description (cont'd)

PCM Circuit Diagram (cont'd)

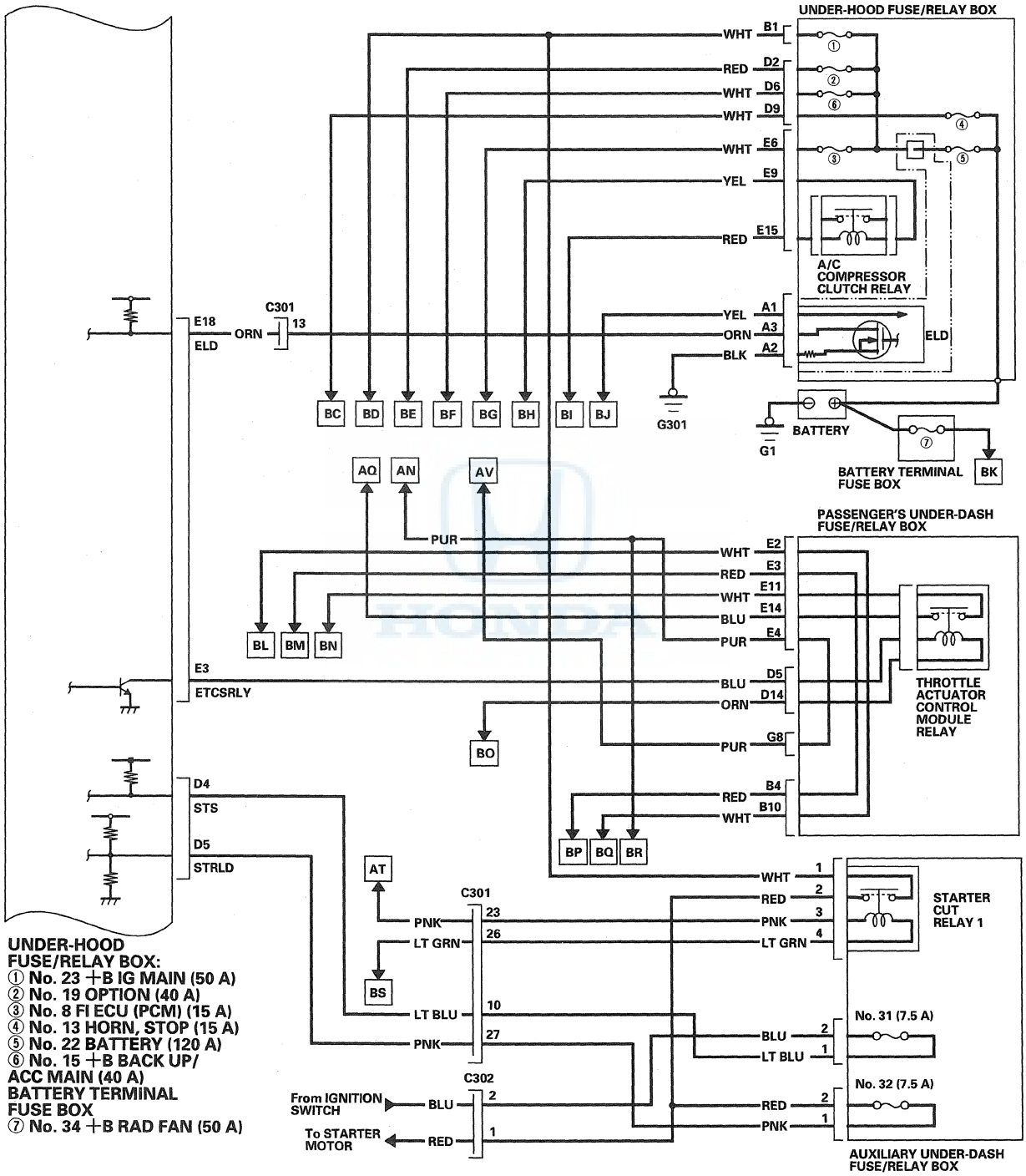

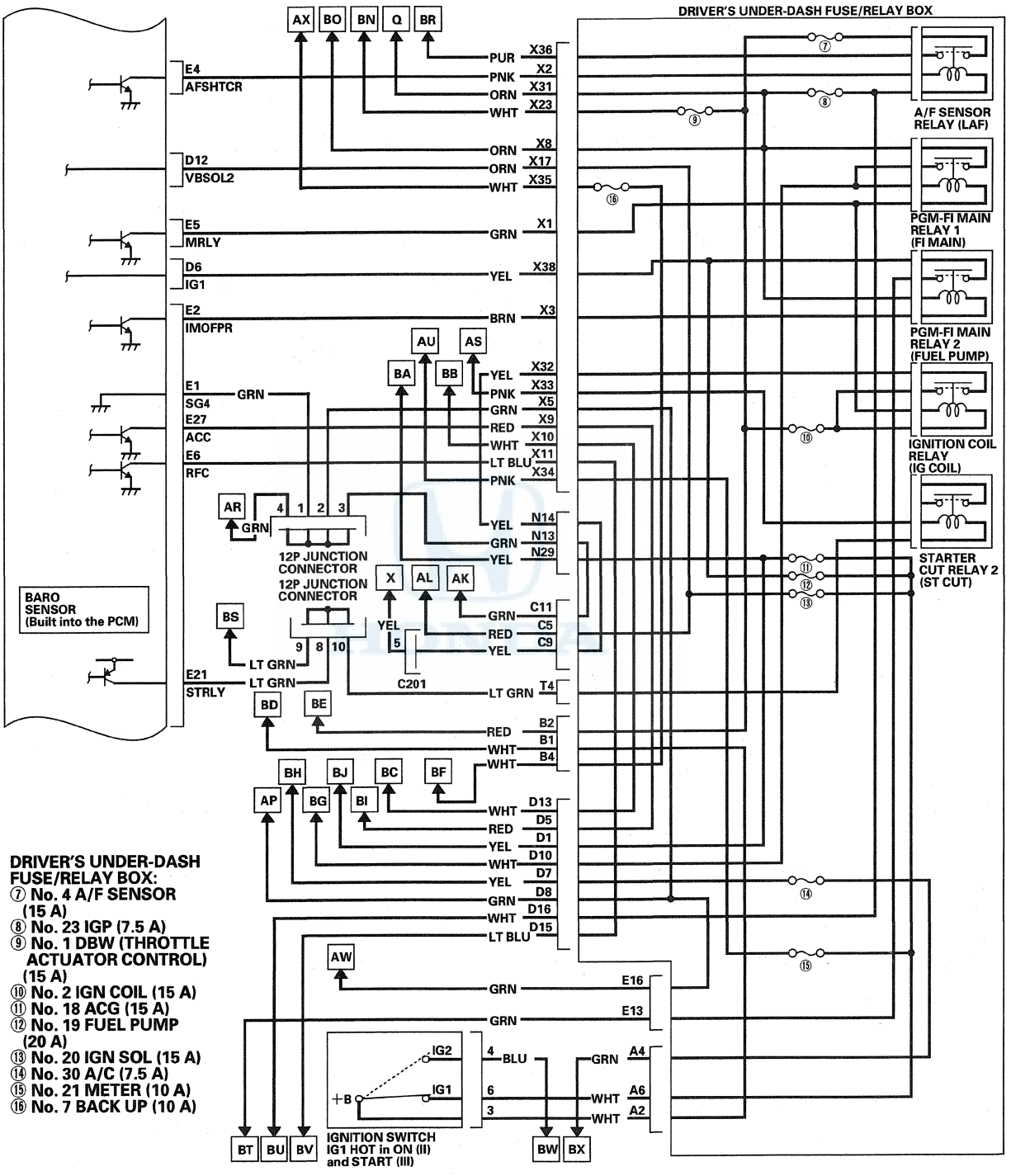

DRIVER'S UNDER-DASH FUSE/RELAY BOX:
- ⑦ No. 4 A/F SENSOR (15 A)
- ⑧ No. 23 IGP (7.5 A)
- ⑨ No. 1 DBW (THROTTLE ACTUATOR CONTROL) (15 A)
- ⑩ No. 2 IGN COIL (15 A)
- ⑪ No. 18 ACG (15 A)
- ⑫ No. 19 FUEL PUMP (20 A)
- ⑬ No. 20 IGN SOL (15 A)
- ⑭ No. 30 A/C (7.5 A)
- ⑮ No. 21 METER (10 A)
- ⑯ No. 7 BACK UP (10 A)

(cont'd)

System Description (cont'd)

PCM Circuit Diagram (cont'd)

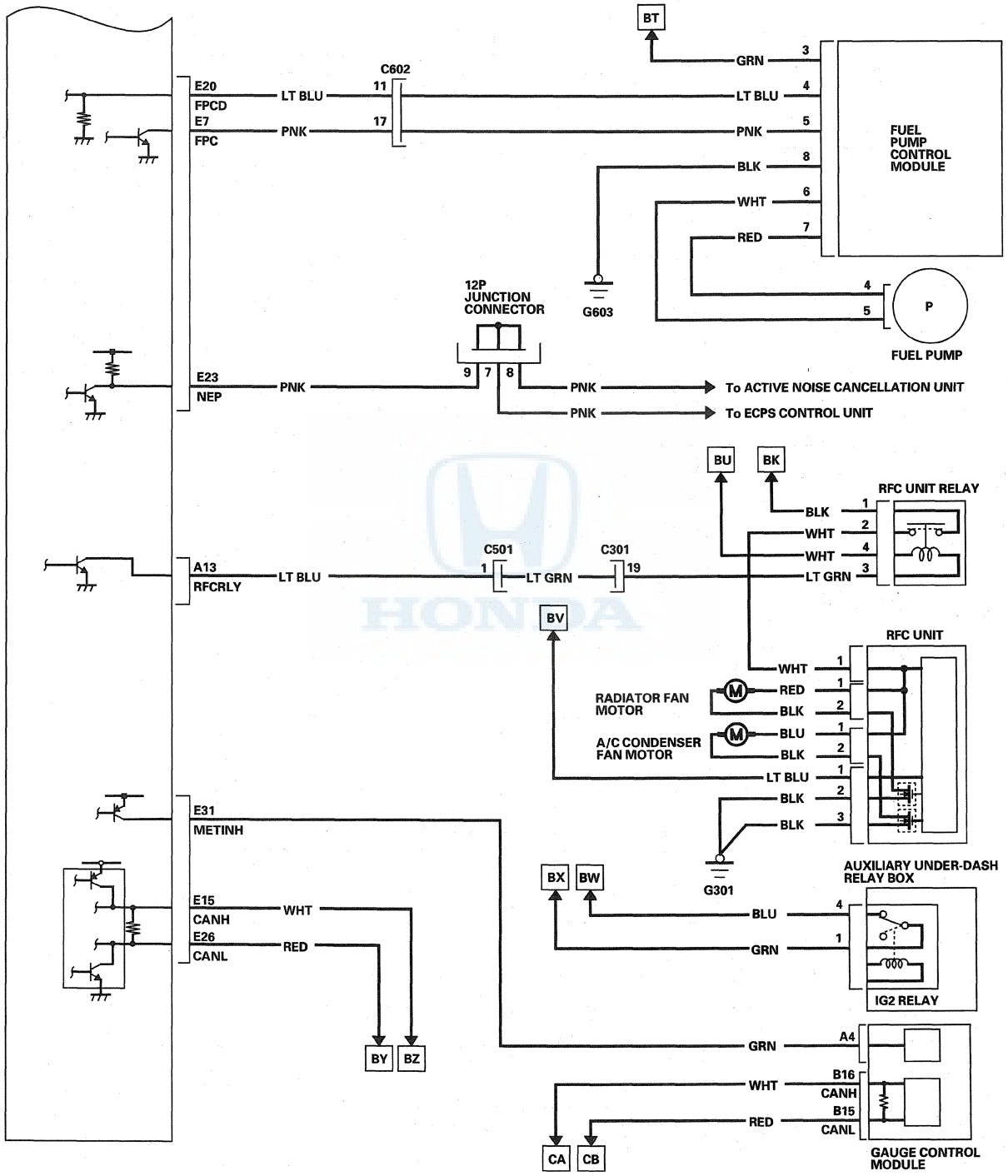

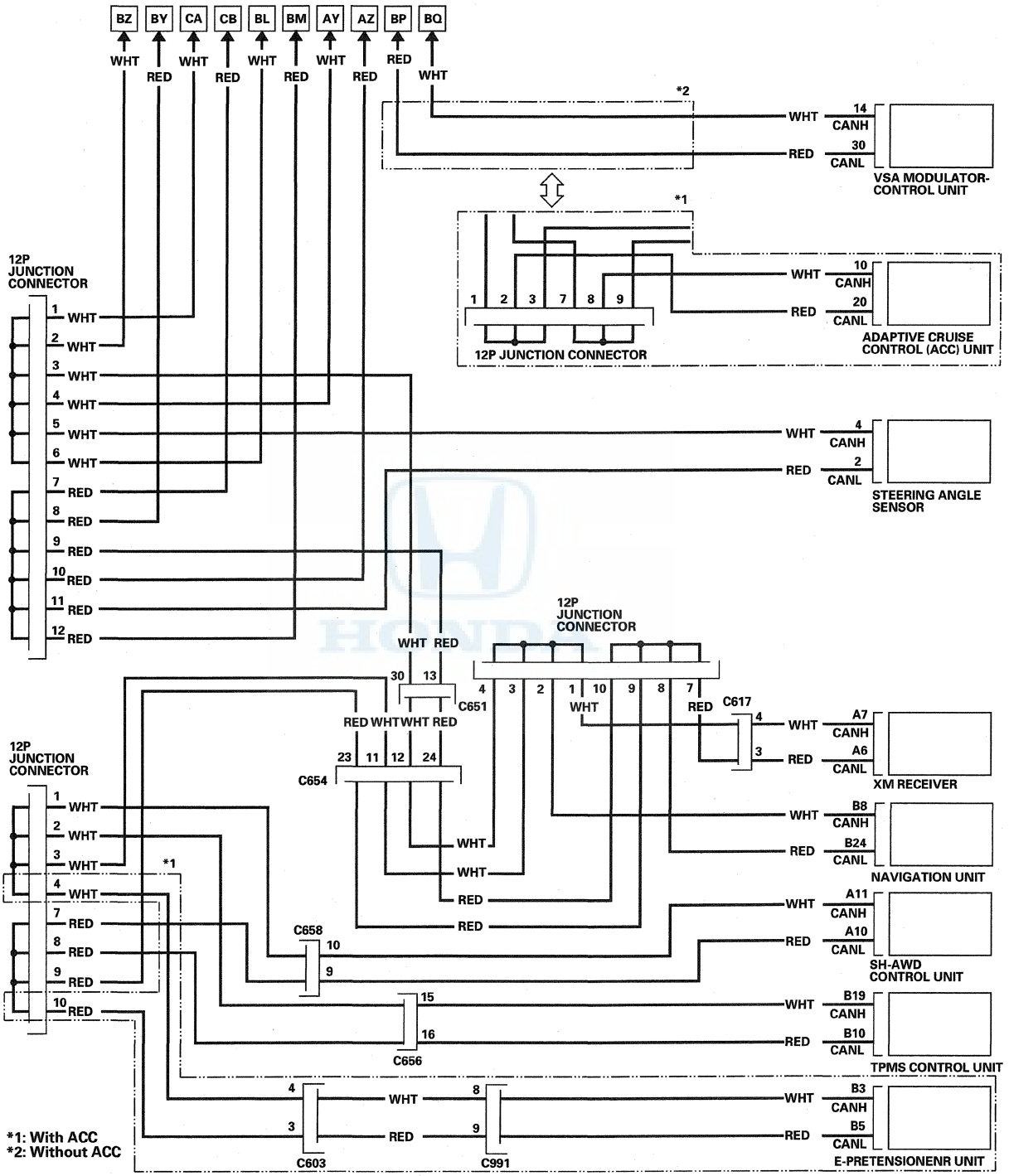
BZ
BY
CA
CB
BL
BM
AY
AZ
BP
BQ
WHT
RED
*2
14
CANH
30
CANL
VSA MODULATOR-CONTROL UNIT
*1
10
CANH
20
CANL
ADAPTIVE CRUISE CONTROL (ACC) UNIT
12P JUNCTION CONNECTOR
4
CANH
2
CANL
STEERING ANGLE SENSOR
C651
C617
A7
CANH
A6
CANL
XM RECEIVER
C654
B8
CANH
B24
CANL
NAVIGATION UNIT
C658
A11
CANH
A10
CANL
SH-AWD CONTROL UNIT
C656
B19
CANH
B10
CANL
TPMS CONTROL UNIT
C603
C991
B3
CANH
B5
CANL
E-PRETENSIONENR UNIT
*1: With ACC
*2: Without ACC

System Description (cont'd)

PGM-FI System

The programmed fuel injection (PGM-FI) system is a sequential multiport fuel injection system.

Alternator Control
The alternator signals the PCM during charging.

Air Conditioning (A/C) Compressor Clutch Relay
When the PCM receives a demand for cooling from the A/C system, it delays the compressor from being energized, and enriches the mixture to assure a smooth transition to the A/C mode.

Air Fuel Ratio (A/F) Sensor
The A/F sensor operates over a wide air/fuel range. The A/F sensor is installed upstream of the WU-TWC, and it sends signals to the PCM which varies the duration of fuel injection accordingly.

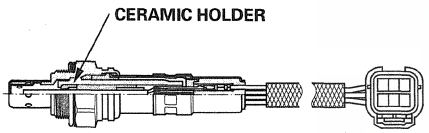

Barometric Pressure (BARO) Sensor
The BARO sensor is inside the PCM. It converts atmospheric pressure into a voltage signal that is used by the PCM to modify the basic duration of the fuel injection discharge.

Camshaft Position (CMP) Sensor
The CMP sensor input is used by the PCM to determine ignition timing at start up (cranking) and when crank angle is abnormal.

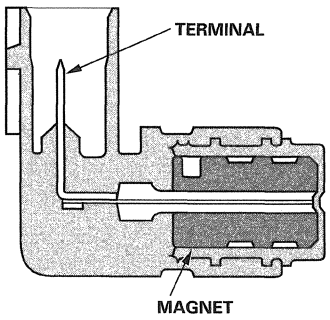

Crankshaft Position (CKP) Sensor
The CKP sensor detects crankshaft speed and is used by the PCM to determine ignition timing, timing for fuel injection of each cylinder, and engine misfire detection.

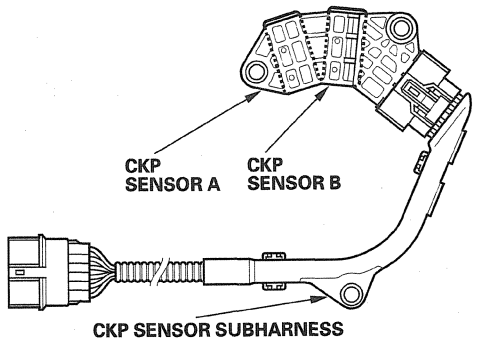

Engine Coolant Temperature (ECT) Sensors 1 and 2
ECT sensors 1 and 2 are temperature dependent resistors (thermistors). The resistance decreases as the engine coolant temperature increases.

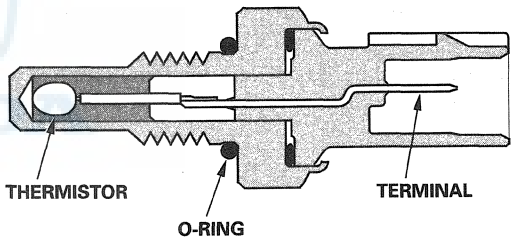

Ignition Timing Control
The PCM contains the memory for basic ignition timing at various engine speeds and manifold absolute pressures. It also adjusts the timing according to engine coolant temperature.

Injector Timing and Duration
The PCM contains the memory for basic discharge duration at various engine speeds and manifold pressures. The basic discharge duration, after being read out from the memory, is further modified by signals sent from various sensors to obtain the final discharge duration.
By monitoring long term fuel trim, the PCM detects long term malfunctions in the fuel system and sets diagnostic trouble codes (DTCs) if needed.

Input Shaft (Mainshaft) Speed Sensor
This sensor detects input shaft (mainshaft) speed.

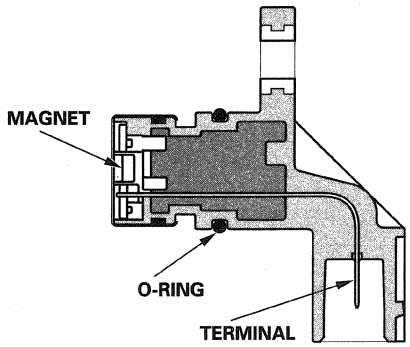

Knock Sensor
The knock control system adjusts the ignition timing to minimize knock.

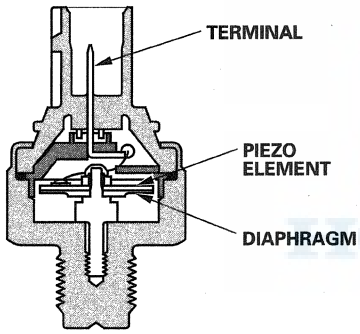

Malfunction Indicator Lamp (MIL) Indication (In relation to Readiness Codes)
The vehicle has certain readiness codes that are part of the on-board diagnostics for the emissions systems. If the vehicle's battery has been disconnected or gone dead, if DTCs have been cleared, or if the PCM has been reset, these codes are reset. In some states, part of the emissions testing is to make sure these codes are set to complete. If all of them are not set to complete, the vehicle may fail the test, or the test cannot be finished.

To check if the readiness codes are set to complete, turn the ignition switch to ON (II), but do not start the engine. The MIL will come on for 15—20 seconds. If it then goes off, the readiness codes are complete. If it flashes five times, one or more readiness codes are not set to complete. To set each code, drive the vehicle or run the engine as described in the procedures (see page 11-65).

Manifold Absolute Pressure (MAP) Sensor
The MAP sensor converts manifold absolute pressure into electrical signals to the PCM.

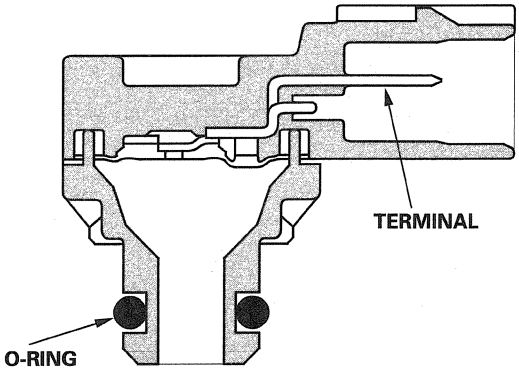

Mass Air Flow (MAF) Sensor/Intake Air Temperature (IAT) Sensor
The mass air flow (MAF) sensor/intake air temperature (IAT) sensor contains a hot wire, a cold film, and a thermistor. It is located in the intake air passage. The resistance of the hot wire, the cold film, and the thermistor changes due to intake air temperature and air flow. The control circuit in the MAF sensor controls the current to keep the hot wire at a set temperature. The current is converted to voltage in the control circuit, then output to the PCM.

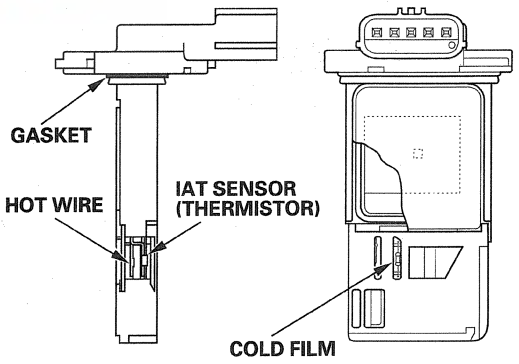

(cont'd)

System Description (cont'd)

Output Shaft (Countershaft) Speed Sensor
This sensor detects countershaft speed.

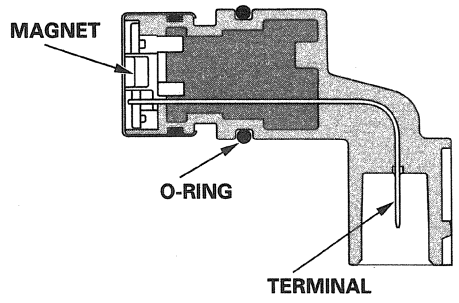

Secondary Heated Oxygen Sensor (Secondary HO2S)
The secondary HO2S detects the oxygen content in the exhaust gas downstream of the warm up three way catalytic converter (WU-TWC), and sends signals to the PCM. To stabilize its output, the sensor has an internal heater. The PCM compares the HO2S output with the A/F sensor output to determine catalyst efficiency. The secondary HO2S is on the WU-TWC.

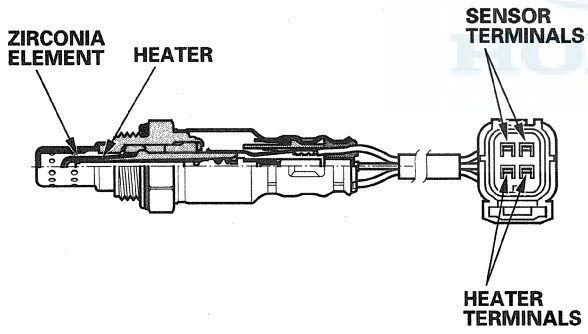

Starter Control System Diagram

The starter control system controls the starter motor.

- When the ignition switch is turned to START (III), the PCM applies current to starter cut relay 1 and starter cut relay 2, then battery voltage is applied to the starter solenoid, and the starter motor runs.
- Once the ignition switch is released, the PCM keeps the starter motor running until the engine starts. If the PCM detects that the engine starts, the PCM stops applying current to the relays, and the starter motor stops.
- If you turn the ignition switch to START (III), while the engine is running, the starter motor does not operate.
- In the following cases, the PCM stops the starter motor:
  - After the starter motor operates for 10 seconds (to prevent the starter motor from overheating).
  - If the engine rpm is too high during starter motor operation.
- If there is a problem with the starter control system, a message appears on the gauge display. When the message is on, the engine can only be started by turning and holding the ignition switch in the start position.

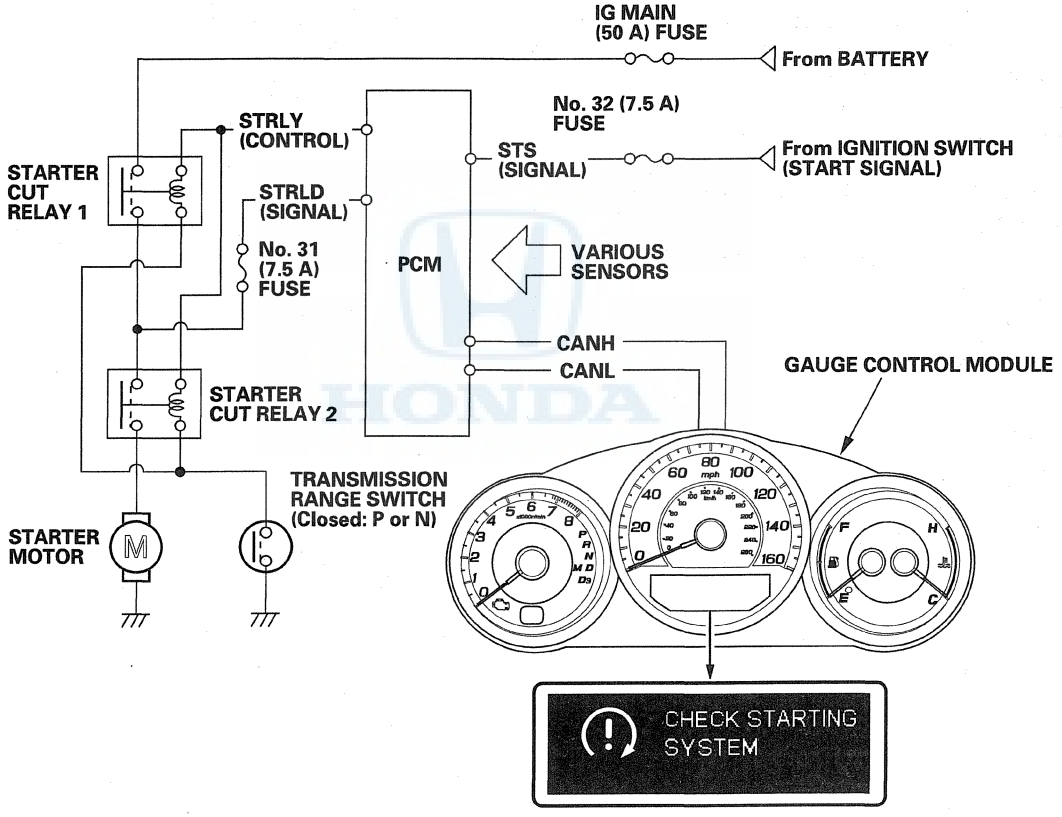

System Description (cont'd)

Electronic Throttle Control System

The throttle is electronically controlled. Refer to the system diagram to see a functional layout of the system.

Idle control: When the engine is idling, the PCM controls the throttle actuator to maintain the proper idle speed according to engine loads.

Acceleration control: When the accelerator pedal is pressed, the PCM opens the throttle valve based on the accelerator pedal position (APP) sensor signal.

Cruise control: The PCM controls the throttle actuator to maintain the set speed when cruise control is operating. The throttle actuator takes the place of the cruise control actuator.

Accelerator Pedal Position (APP) Sensor
As the accelerator pedal position changes, the sensor varies the signal voltage to the PCM which then controls the throttle position.

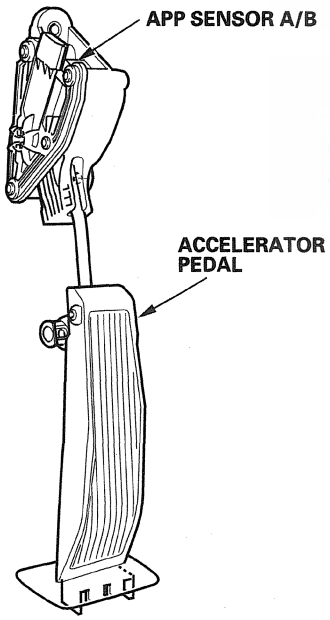

Throttle Body
The throttle body is a single-barrel side draft type. The lower portion of the throttle valve is heated by engine coolant from the cylinder head to prevent icing of the throttle plate.

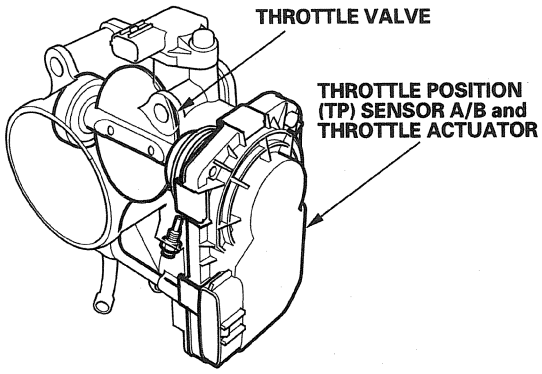

Electronic Throttle Control System Diagram

The electronic throttle control system consists of the throttle actuator, throttle position (TP) sensor A/B, accelerator pedal position (APP) sensor A/B, the electronic throttle control system (ETCS) control relay, and the PCM.

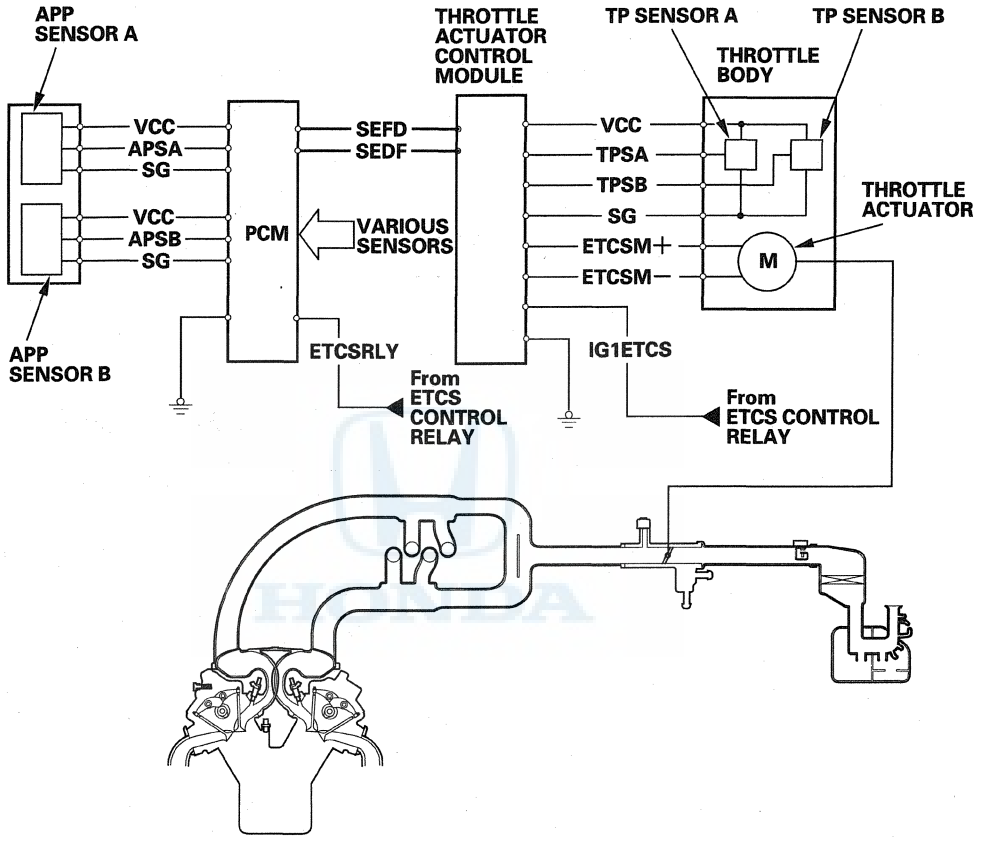

System Description (cont'd)

VTEC

- The VTEC system changes the cam profile to correspond to engine speed. It maximizes torque at low engine speed and output at high engine speed. The low lift cam is used at low engine speeds, and the high lift cam is used at high engine speeds.
- Both the intake valve side and the exhaust valve side have primary and secondary rocker arms. These rocker arms are locked and separated to change the cam profile by switching the oil passages. Roller rockers are used to minimize mechanical friction.

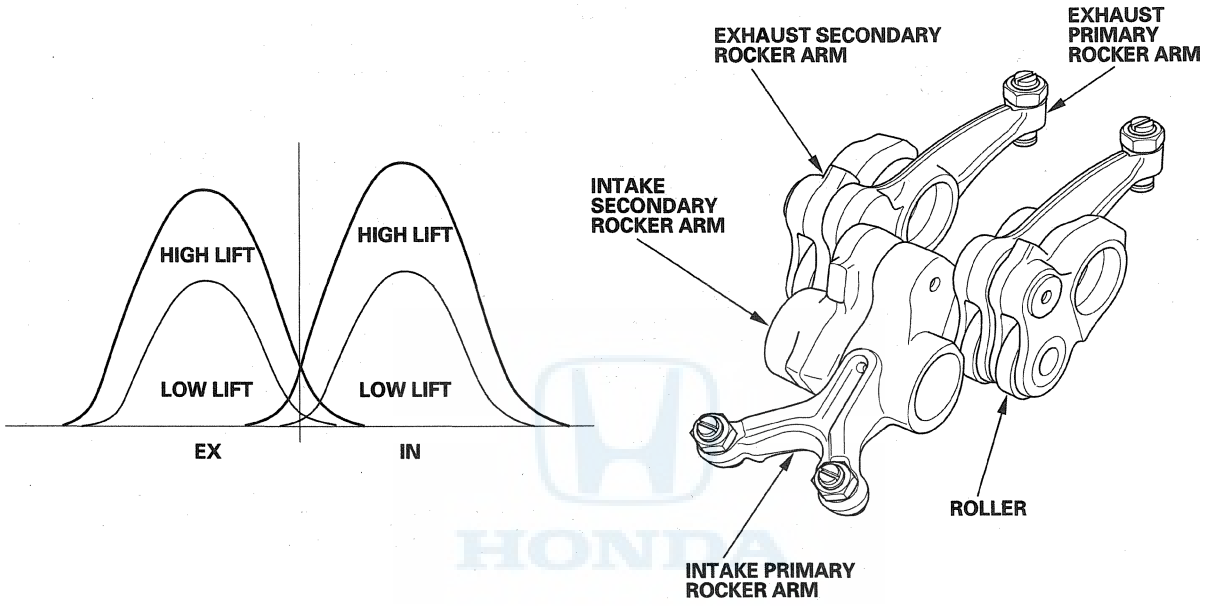

- The VTEC system oil pressure switched by the rocker arm oil control valve changing the hydraulic circuit. The rocker arm oil control valve is controlled by the rocker arm oil control solenoid. The rocker arm oil pressure switch detects VTEC system oil pressure and sends this information to the PCM.

ENGINE SPEED	ROCKER ARM OIL CONTROL SOLENOID	INTAKE and EXHAUST VALVE LIFT
LOW	OFF	LOW
HIGH	ON	HIGH

VTEC System Operation

At low engine speed

The rocker arm oil control solenoid is turned off by the PCM. Oil pressure from the rocker arm oil control valve does not enter the rocker shaft. The primary and secondary rocker arms are separated by a return spring and lifted by the low lift cam lobe.

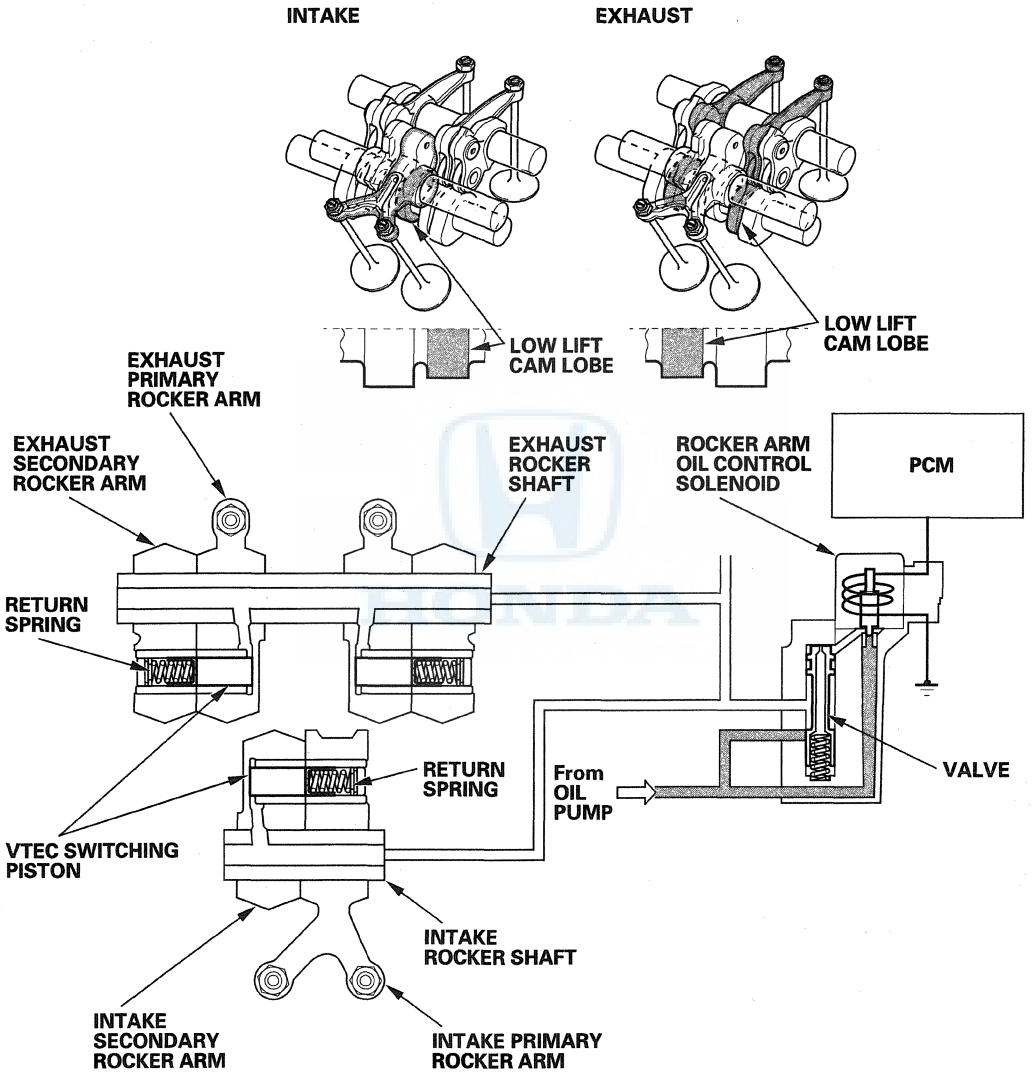

(cont'd)

System Description (cont'd)

VTEC System Operation

At high engine speed

The rocker arm oil control solenoid is turned on by the PCM. Oil pressure from the rocker arm control solenoid enters the intake secondary rocker arm and the exhaust primary rocker arm via the rocker shaft, and it moves the VTEC switching piston into the intake primary rocker arm and the exhaust secondary rocker arm. This causes the VTEC switching pistons to lock both rocker arms (primary and secondary) together. Both rocker arms are then lifted by the high lift cam lobe.

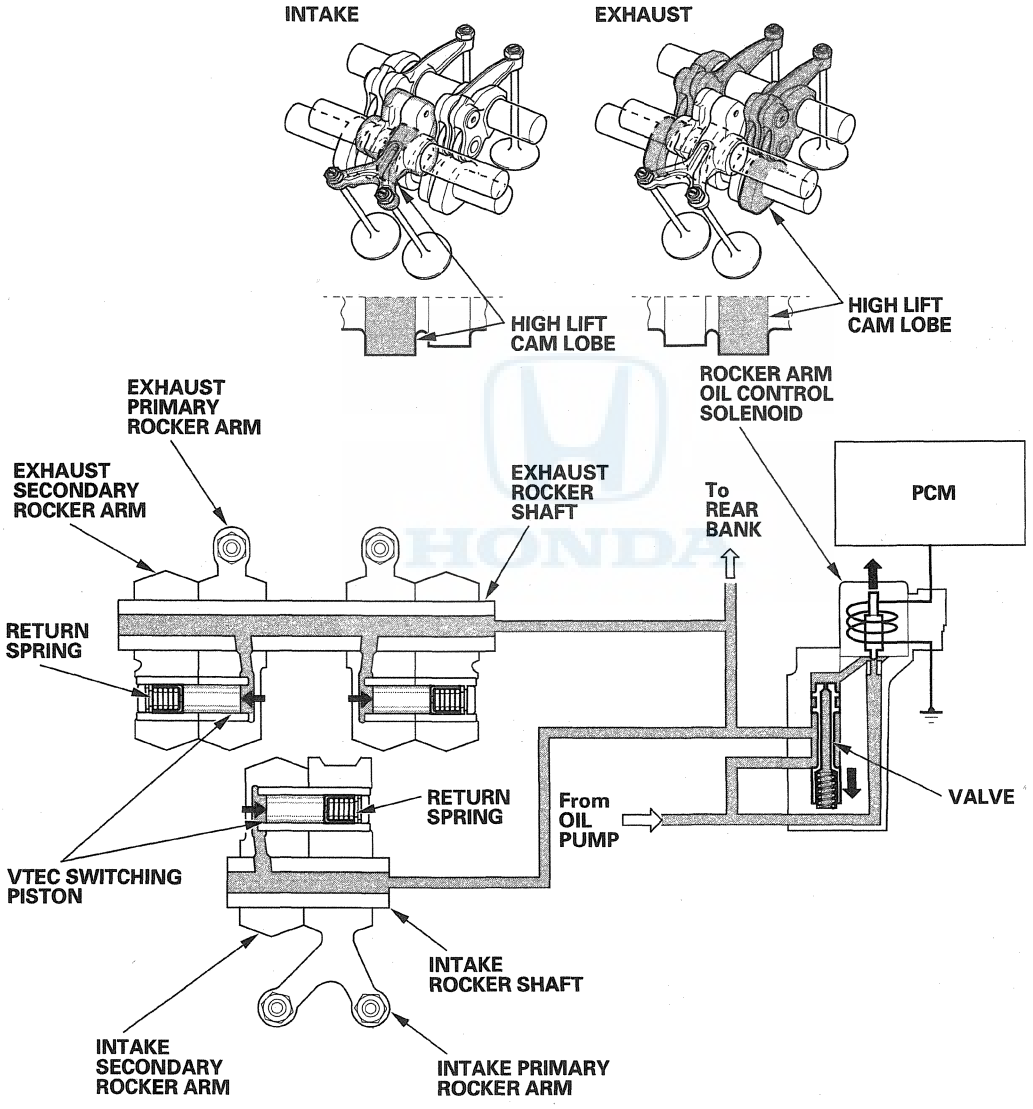

Idle Control System

When the engine is cold, if the A/C compressor is on, the transmission is in gear, the brake pedal is pressed, the power steering load is high, or the alternator is charging, the PCM controls current to the throttle actuator to maintain the correct idle speed.

Brake Pedal Position Switch
The brake pedal position switch signals the PCM when the brake pedal is pressed.

Power Steering Pressure (PSP) Switch
The PSP switch signals the PCM when the power steering load is high.

Fuel Supply System

Fuel Cutoff Control
During deceleration with the throttle valve closed, current to the injectors is cut off to improve fuel economy at engine speeds over 850 rpm. Fuel cutoff control also occurs when the engine speed exceeds 6,900 rpm, regardless of the position of the throttle valve, to protect the engine from over-reving. When the vehicle is stopped, the PCM cuts the fuel at engine speeds over 4,000 rpm. On a cold engine, fuel cut occurs at a lower engine speed.

Fuel Pump Control
When the ignition switch is turned to ON (II), the PCM grounds PGM-FI main relay 2 which feeds current to the fuel pump control module. The PCM sends a signal to the fuel pump control module to operate the fuel pump for 2 seconds to pressurize the fuel system. When the engine starts, the fuel pump speed is controlled in four levels by the fuel pump control module. The PCM selects the fuel pump speed based on calculating the injector activation time and the engine speed, and then sends an operation command signal to the fuel pump control module. This operation decreases fuel pump noise at low engine speed.

PGM-FI Main Relay 1 (FI MAIN) and 2 (FUEL PUMP)
PGM-FI main relay 1 (FI MAIN) is energized whenever the ignition switch is ON (II) to supply battery voltage to the PCM, power to the injectors, and power for PGM-FI main relay 2 (FUEL PUMP). PGM-FI main relay 2 (FUEL PUMP) is energized to supply power to the fuel pump for 2 seconds when the ignition switch is turned to ON (II), and when the engine is cranking or running.

Transfer Fuel Pump
The fuel in the right side of the fuel tank is drawn over to the left side by the transfer fuel pump.

System Description (cont'd)

Intake Air System

Intake Manifold Tuning (IMT) Valve
Engine power is adjusted by opening and closing the intake manifold tuning (IMT) valve. When the valve is closed, there is high torque at low engine speed. When the valve is open, there is high torque at high engine speed.
The intake manifold tuning (IMT) actuator contains a sensor that detects the IMT valve position and sends it to the PCM.

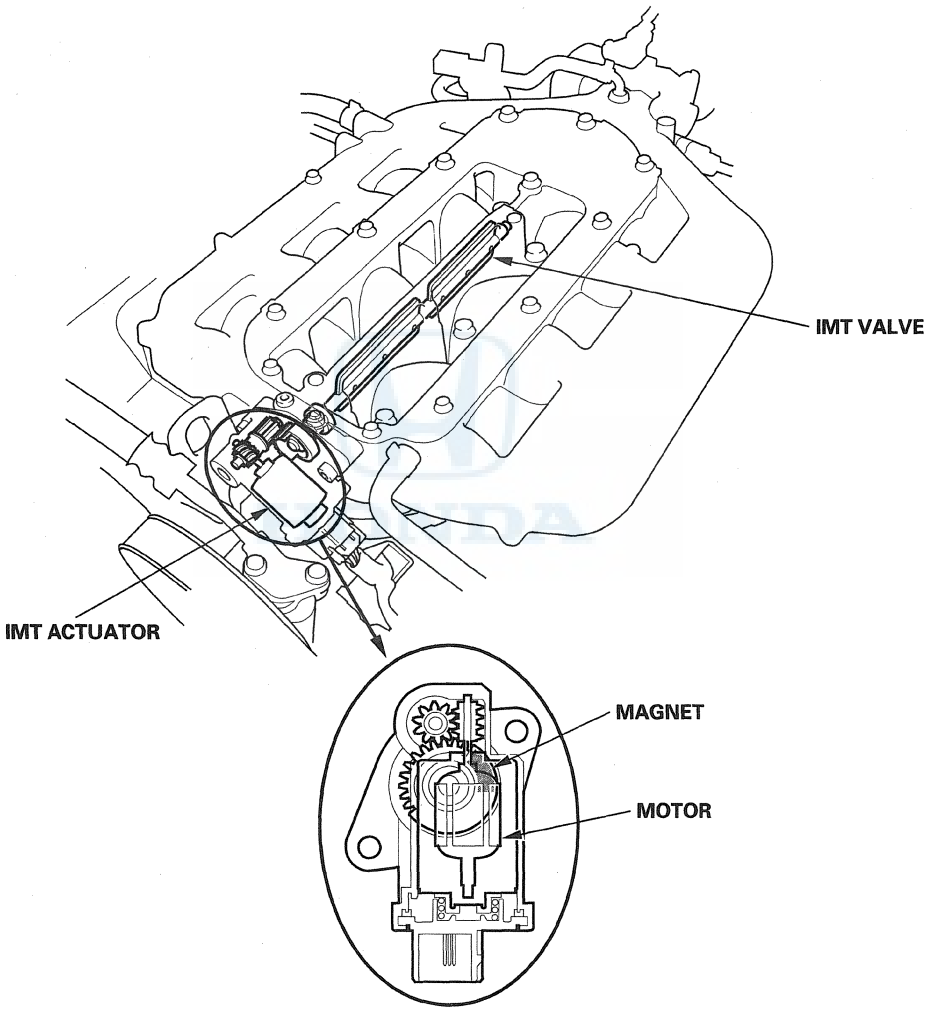

Catalytic Converter System

Warm Up Three Way Catalytic Converter (WU-TWC) and Under-floor Three Way Catalytic Converter (TWC)
The WU-TWC/Under-floor TWC converts hydrocarbons (HC), carbon monoxide (CO), and oxides of nitrogen (NOx) in the exhaust gas to carbon dioxide (CO_2), nitrogen (N_2), and water vapor.

WU-TWC

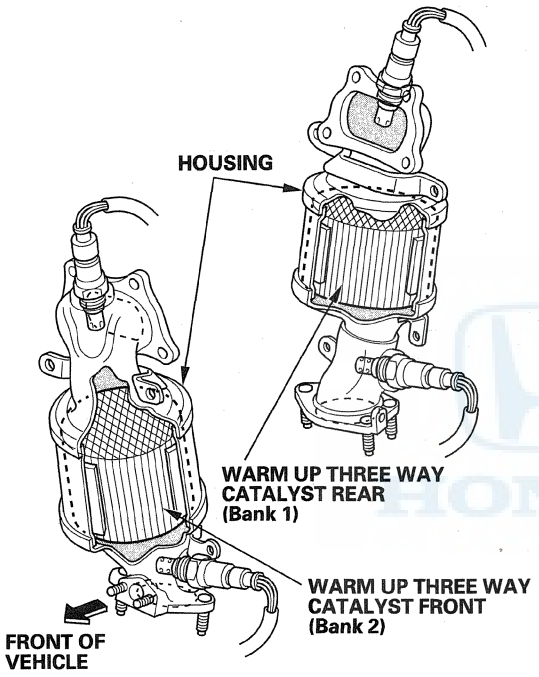

UNDER-FLOOR TWC

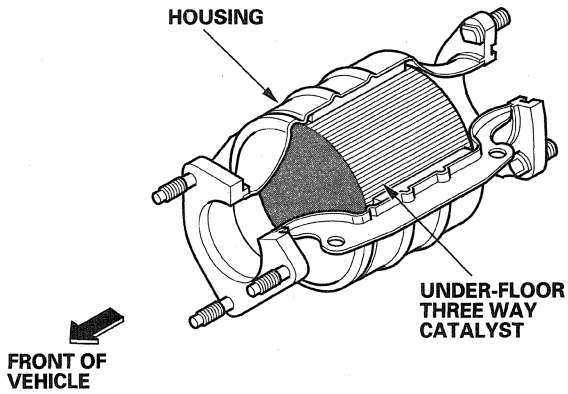

Exhaust Gas Recirculation (EGR) System

Refer to the system diagram to see a functional layout of the system.

EGR Valve
The EGR valve lowers peak combustion temperatures and reduces oxides of nitrogen emissions (NOx) by recirculating exhaust gas through the intake manifold and into the combustion chambers.

(cont'd)

System Description (cont'd)

Exhaust Gas Recirculation (EGR) System Diagram

The EGR system reduces oxides of nitrogen (NOx) emissions by recirculating exhaust gas through the EGR pipe to the intake manifold, and into the combustion chambers. Routing the exhaust gas through the EGR pipe helps to prevent carbon deposits from forming in the intake manifold and the throttle body. The PCM memory includes the ideal EGR valve position for varying operating conditions.

The EGR valve position sensor detects the amount of EGR valve lift and sends it to the PCM. The PCM then compares it with the ideal lift in its memory (based on signals sent from other sensors). If there is any difference between the two, the PCM cuts current to the EGR valve.

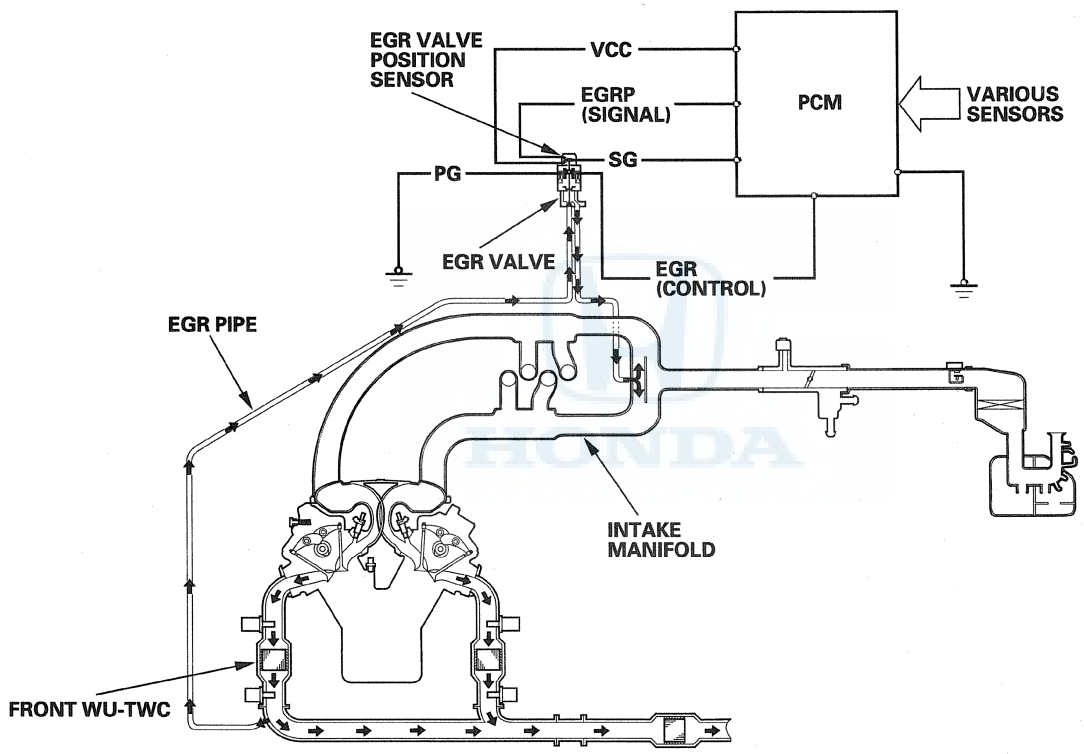

Positive Crankcase Ventilation (PCV) System

The PCV valve prevents blow-by gasses from escaping into the atmosphere by venting them into the intake manifold.

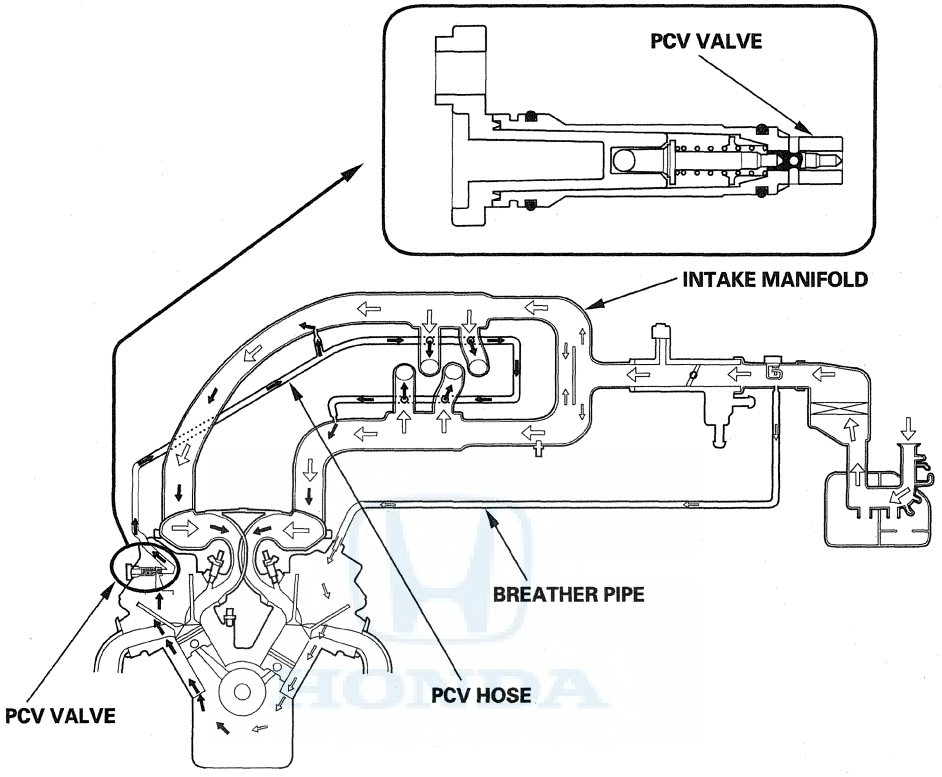

System Description (cont'd)

Evaporative Emission (EVAP) Control System

Refer to the system diagram to see a functional layout of the system.

EVAP Canister
The EVAP canister temporarily stores fuel vapor from the fuel tank until it can be purged from the EVAP canister into the engine and burned.

EVAP Canister Purge Valve
When the engine coolant temperature is below 140 °F (60 °C), the PCM turns off the EVAP canister purge valve which cuts vacuum to the EVAP canister.

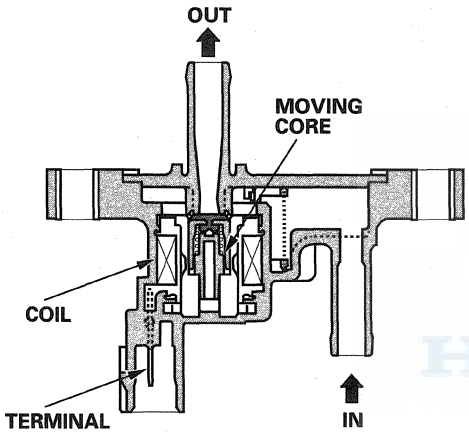

Fuel Tank Pressure (FTP) Sensor
The FTP sensor converts fuel tank absolute pressure into an electrical input to the PCM.

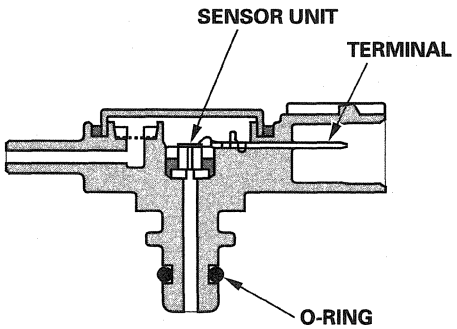

EVAP Canister Vent Shut Valve
The EVAP canister vent shut valve is on the EVAP canister.
The EVAP canister vent shut valve controls the venting of the EVAP canister.

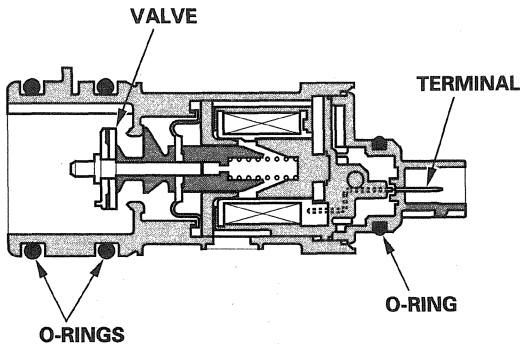

Evaporative Emission (EVAP) Control Diagram

The EVAP controls minimize the amount of fuel vapor escaping to the atmosphere. Vapor from the fuel tank is temporarily stored in the EVAP canister until it can be purged from the canister into the engine and burned.

- The EVAP canister is purged by drawing fresh air through it and into a port on the intake manifold. The purging vacuum is controlled by the EVAP canister purge valve, which operates whenever the engine coolant temperature is above 140 °F (60 °C).
- During refueling, the fuel tank vapor control valve opens from pressure in the fuel tank and feeds the fuel vapor to the EVAP canister.

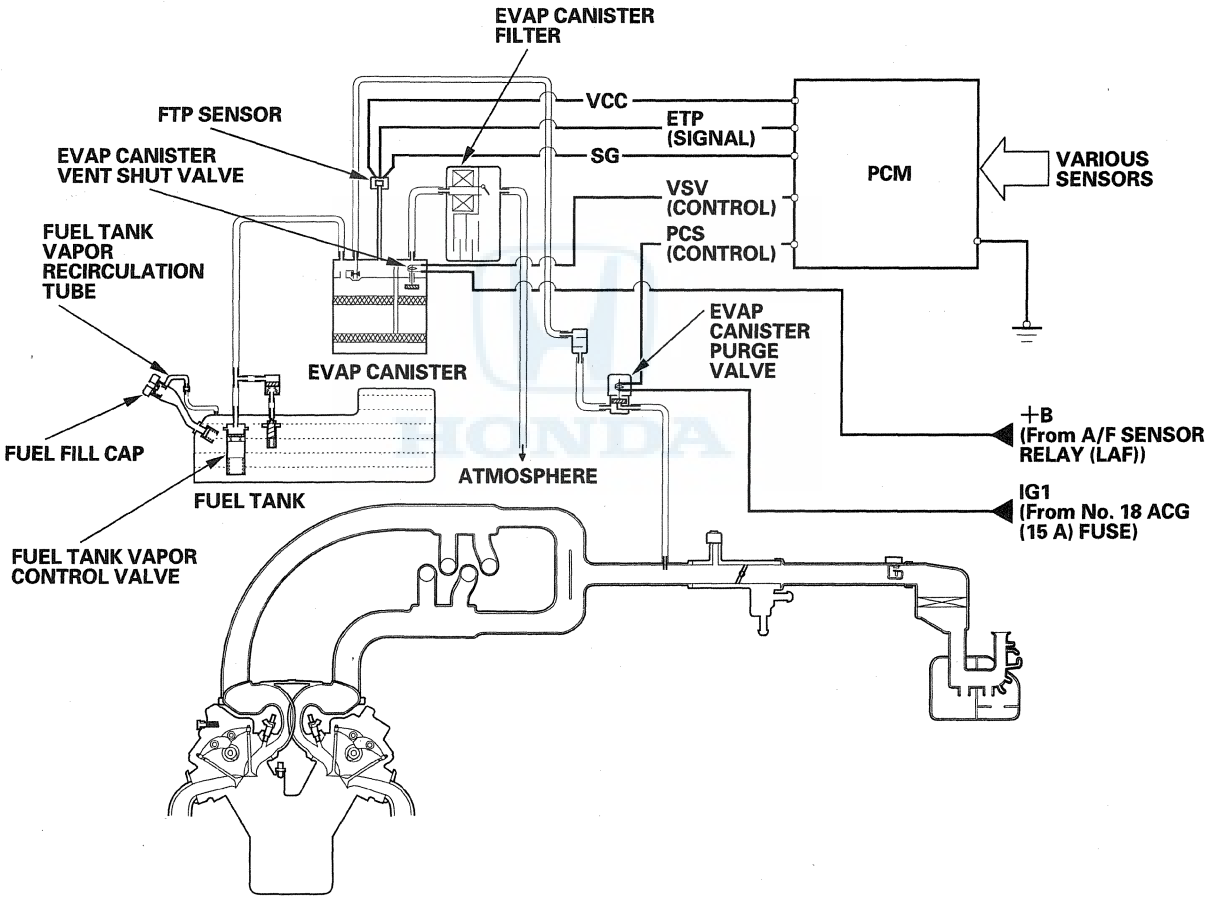

(cont'd)

System Description (cont'd)

Fuel Cap Warning Message

The PCM detects a loose or missing fuel fill cap as an evaporative system leak and alerts the driver by showing a warning message in the multi-information display.

First drive cycle
The first time a leak is detected a TIGHTEN FUEL CAP message appears in the multi-information display (A). To scroll to another message, press the select/reset button. The TIGHTEN FUEL CAP message appears each time you restart the engine until the system turns the message off. Turn the engine off, then replace or tighten the fuel fill cap until it clicks at least once.

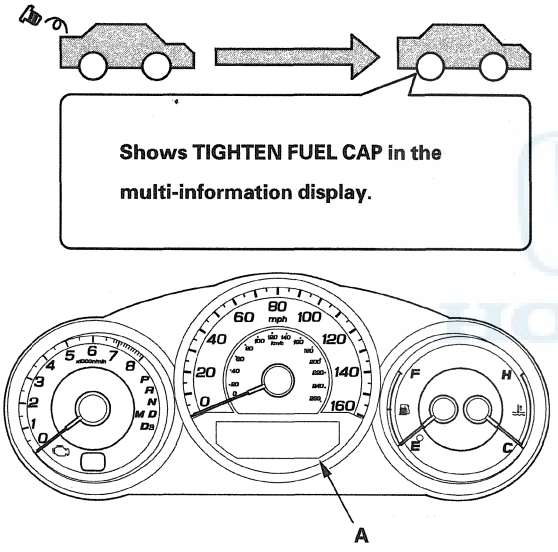

To make the message go off (with the HDS)

Procedure

1. Tighten the fuel fill cap until it clicks.
2. Clear the Pending DTC with the HDS.
3. Verify there is no leak by doing the EVAP FUNCTION TEST in the INSPECTION MENU with the HDS.

To make the message go off (without the HDS)

Procedure

1. Tighten the fuel fill cap until it clicks.
2. Start the engine, then turn the ignition switch to LOCK (0).
3. Repeat step 2 two more times.

How to Set Readiness Codes

Malfunction Indicator Lamp (MIL) Indication (In relation to Readiness Codes)

The vehicle has certain readiness codes that are part of the on-board diagnostics for the emissions systems. If the vehicle's battery has been disconnected or gone dead, if DTCs have been cleared, or if the PCM has been reset, these readiness codes are reset to incomplete. In some states, part of the emissions testing is to make sure these codes are set to complete. If all of them are not set to complete, the vehicle may fail the emission test, or the test cannot be finished.

To check if the readiness codes are set to complete, turn the ignition switch to ON (II), but do not start the engine. The MIL comes on for 15—20 seconds. If it then goes off, the readiness codes are set to complete. If it flashes five times, one or more readiness codes are not set to complete. To set readiness codes from incomplete to complete, do the procedure for the appropriate code.

To check the status of a specific DTC system, check the OBD status in the DTC MENU with the HDS (see page 11-8). This screen displays the DTC, the current data list of the enable criteria, and the status of the readiness testing.

Catalytic Converter Monitor and Readiness Code

NOTE:
- Do not turn the ignition switch to ACC (I) or to LOCK (0) during the procedure.
- All readiness codes are cleared when the battery is disconnected, if DTCs have been cleared, or if the PCM is reset with the HDS.
- Low ambient temperatures or excessive stop-and-go traffic may increase the drive time needed to switch the readiness code from incomplete to complete.
- The readiness code will not switch to complete until all the enable criteria are met.
- If a fault in the secondary HO2S system caused the MIL to come on, the readiness code cannot be set to complete until you correct the fault.

Enable Criteria

- ECT SENSOR 1 at 158 °F (70 °C) or more.
- IAT SENSOR at 14.7 °F (—9.6 °C) or more.
- Vehicle speed above 3 mph (5 km/h).

Procedure

1. Connect the HDS to the vehicle's data link connector (DLC), and bring up the READINESS CODEs screen for Catalyst in the DTCs MENU.
2. Start the engine.
3. Test-drive the vehicle under stop-and-go conditions with short periods of steady cruise. After about 5 miles (8 km), the readiness code should switch to completed.
4. If the readiness code is still not set to complete, check for a Pending DTC with the HDS. If there is no DTC, one or more of the enable criteria were probably not met; repeat the procedure.

(cont'd)

How to Set Readiness Codes (cont'd)

Evaporative Emissions (EVAP) Control System Monitor and Readiness Code

NOTE: All readiness codes are cleared when the battery is disconnected, if DTCs have been cleared, or if the PCM is reset with the HDS.

Enable Criteria

- Battery voltage is higher than 10.5 V.
- Engine at idle.
- ECT SENSOR 1 and 2 between 176 °F (80 °C) and 212 °F (100 °C).
- MAP SENSOR less than 46.6 kPa (14 in.Hg, 350 mmHg).
- Vehicle speed 0 mph (0 km/h).
- IAT SENSOR between 32 °F (0 °C) and 212 °F (100 °C).

Procedure

1. Connect the HDS to the DLC.
2. Start the engine.
3. Select the EVAP TEST in the INSPECTION MENU with the HDS, then select the FUNCTION TEST in the EVAP TEST MENU.
   - If the result is normal, readiness is complete.
   - If the result is not normal, go to the next step.
4. Check for a Pending DTC. If there is no DTC, one or more of the enable criteria were probably not met; repeat the procedure.

Air Fuel Ratio (A/F) Sensor Monitor and Readiness Code

NOTE:
- Do not turn the ignition switch to ACC (I) or to LOCK (0) during the procedure.
- All readiness codes are cleared when the battery is disconnected, if DTCs have been cleared, or if the PCM is reset with the HDS.

Enable Criteria

ECT SENSOR 1 at 158 °F (70 °C) or more.

Procedure

1. Start the engine.
2. Test-drive the vehicle under stop-and-go conditions with short periods of steady cruise. During the drive, decelerate (with the throttle fully closed) for 5 seconds. After about 3.5 miles (5.6 km), the readiness code should switch from incomplete to complete.
3. Check the readiness codes screen for the AIR FUEL RATIO (A/F) SENSOR in the DTCs MENU with the HDS.
   - If the screen shows complete, readiness is complete.
   - If the screen shows not complete, go to the next step.
4. Check for a Pending DTC. If there is no DTC, the enable criteria was probably not met. Select the DATA LIST Menu. Check the ECT SENSOR in the ALL DATA LIST with the HDS. If the ECT is lower than 158 °F (70 °C), run the engine until it is more than 158 °F (70 °C), then repeat the procedure.

Air Fuel Ratio (A/F) Sensor Heater Monitor Readiness Code

NOTE: All readiness codes are cleared when the battery is disconnected, if DTCs have been cleared, or if the PCM is reset with the HDS.

Procedure

1. Start the engine, and let it idle for 1 minute. The readiness code should switch from incomplete to complete.
2. If the readiness code is still not set to complete, check for a Pending DTC. If there is no DTC, repeat the procedure.

Misfire Monitor and Readiness Code

- This readiness code is always set to available because misfiring is continuously monitored.
- Monitoring pauses, and the misfire counter resets, if the vehicle is driven over a rough road.
- Monitoring also pauses, and the misfire counter holds at its current value, if the throttle position changes more than a predetermined value, or if driving conditions fall outside the range of any related enable criteria.

Fuel System Monitor and Readiness Code

- This readiness code is always set to available because the fuel system is continuously monitored during closed loop operation.
- Monitoring pauses when the catalytic converter, the EVAP control system, and the A/F sensor monitors are active.
- Monitoring also pauses when any related enable criteria are not being met. Monitoring resumes when the enable criteria is again being met.

Comprehensive Component Monitor and Readiness Code

This readiness code is always set to available because the comprehensive component monitor is continuously running whenever the engine is cranking or running.

EGR Monitor and Readiness Code

NOTE:
- Do not turn the ignition switch to ACC (I) or to LOCK (0) during the procedure.
- All readiness codes are cleared when the battery is disconnected, if DTCs have been cleared, or if the PCM is reset with the HDS.

Enable Criteria

ECT SENSOR 1 at 176 °F (80 °C) or more.

Procedure

1. Connect the HDS to the DLC.
2. Start the engine.
3. Drive at a steady speed with the transmission in D, at 50—62 mph (80—100 km/h) or above for more than 10 seconds.
4. With the transmission in D, decelerate from 62 mph (100 km/h) or above by completely releasing the throttle for at least 5 seconds. If the engine is stopped during this procedure, go to step 3 and do the procedure again.
5. Check the OBD status screen for DTC P0401 in the DTC's MENU with the HDS.
   - If it is passed, readiness is complete.
   - If it is not passed, go to step 3 and retest.

Component Location Index

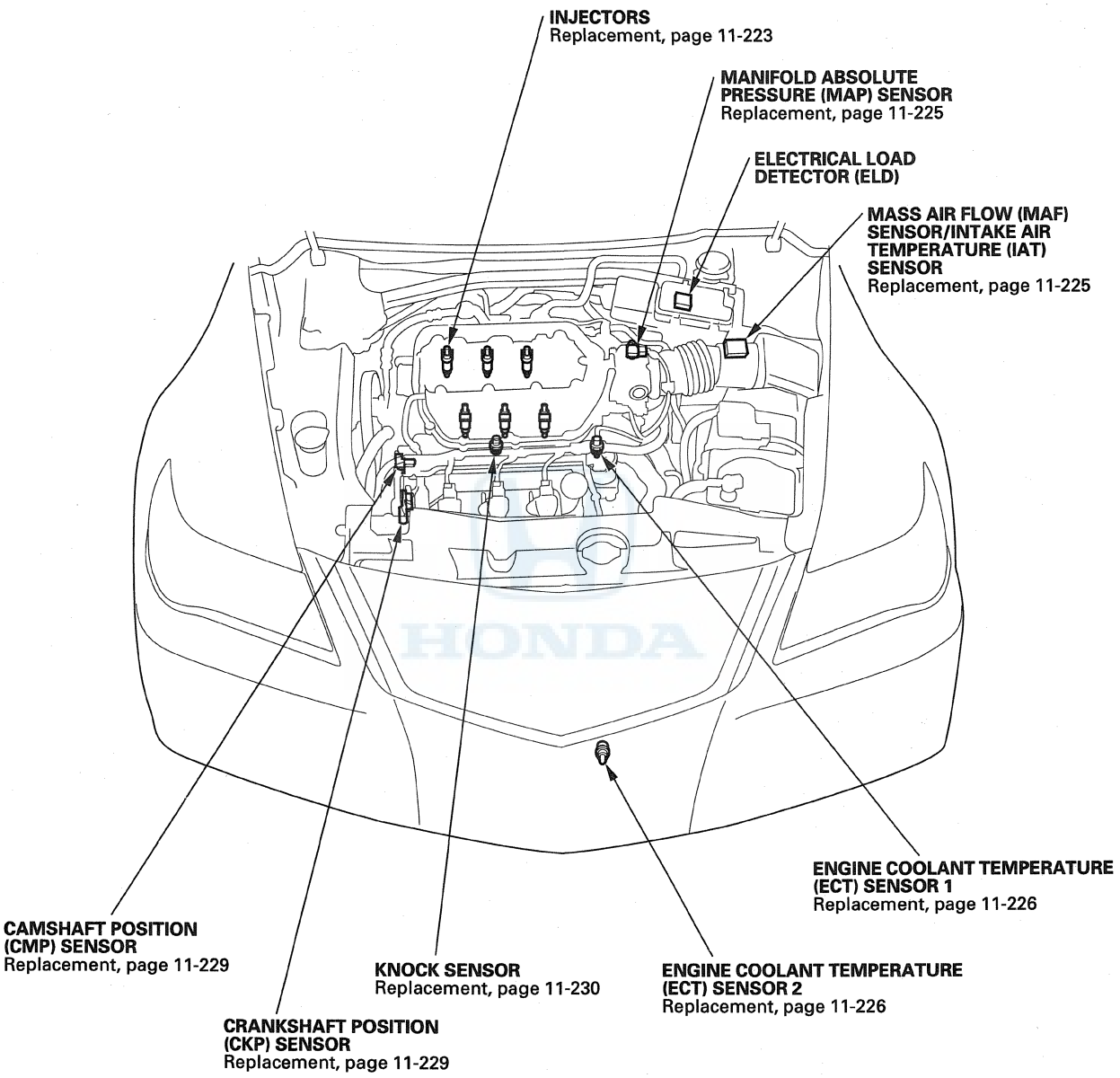

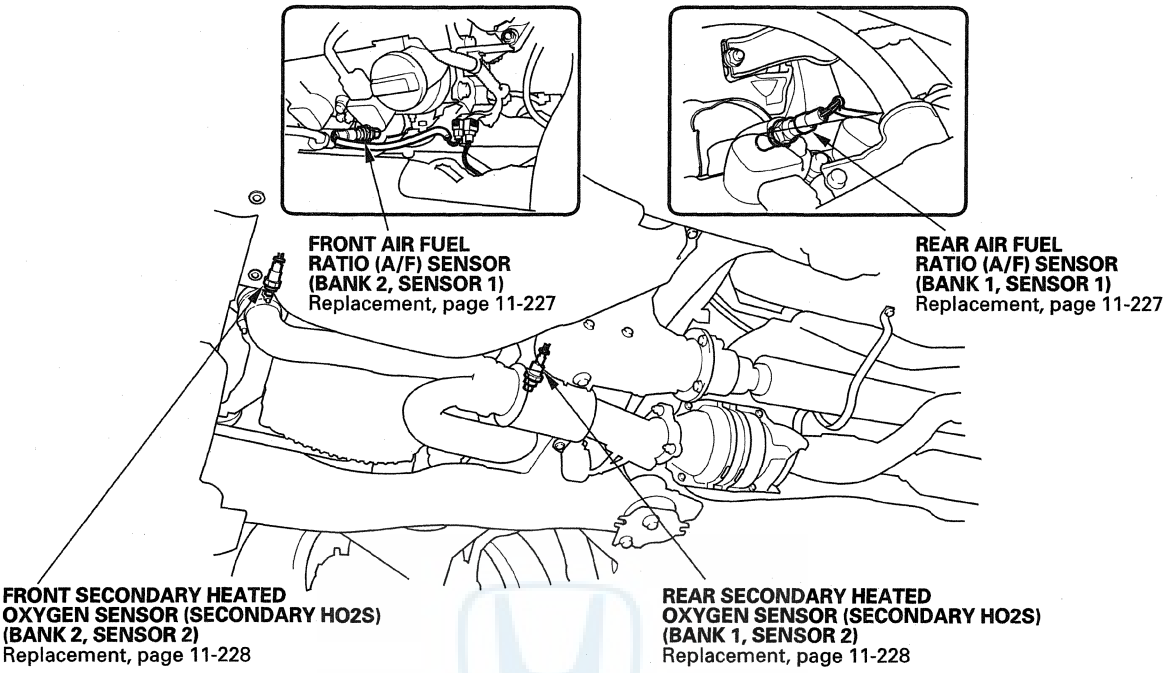
FRONT AIR FUEL RATIO (A/F) SENSOR (BANK 2, SENSOR 1)
Replacement, page 11-227
REAR AIR FUEL RATIO (A/F) SENSOR (BANK 1, SENSOR 1)
Replacement, page 11-227
FRONT SECONDARY HEATED OXYGEN SENSOR (SECONDARY HO2S) (BANK 2, SENSOR 2)
Replacement, page 11-228
REAR SECONDARY HEATED OXYGEN SENSOR (SECONDARY HO2S) (BANK 1, SENSOR 2)
Replacement, page 11-228

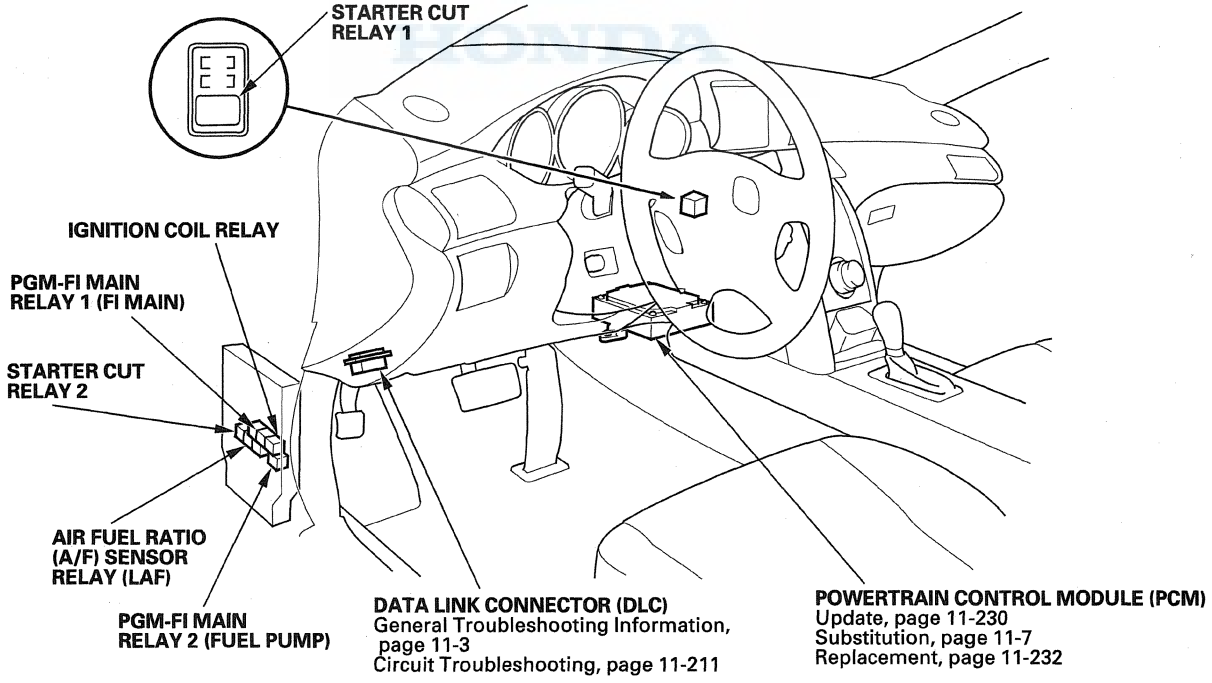
STARTER CUT RELAY 1
IGNITION COIL RELAY
PGM-FI MAIN RELAY 1 (FI MAIN)
STARTER CUT RELAY 2
AIR FUEL RATIO (A/F) SENSOR RELAY (LAF)
PGM-FI MAIN RELAY 2 (FUEL PUMP)
DATA LINK CONNECTOR (DLC)
General Troubleshooting Information, page 11-3
Circuit Troubleshooting, page 11-211
POWERTRAIN CONTROL MODULE (PCM)
Update, page 11-230
Substitution, page 11-7
Replacement, page 11-232

DTC Troubleshooting

DTC P0101: MAF Sensor Circuit Range/ Performance Problem

NOTE:
- Before you troubleshoot, record all freeze data and any on-board snapshot, and review the general troubleshooting information (see page 11-3).
- If DTC P1128, P1129, P2228, and/or P2229 are stored at the same time as DTC P0101, troubleshoot those DTCs first, then recheck for DTC P0101.

1. Check for poor connections or damage to these parts:

   - PCV hose
   - Intake air duct
   - Air cleaner
   - Purge (PCS) line
   - Brake booster
   - Brake booster hose

   Are the parts OK?

   YES—Go to step 2.

   NO—Repair or replace the damaged part(s), then go to step 15.

2. Check for damage or looseness at the air duct in the air cleaner.

   Is it OK?

   YES—Go to step 3.

   NO—Reconnect or replace the air duct in the air cleaner, then go to step 15.

3. Check for a dirty air cleaner element.

   Is it dirty?

   YES—Replace the air cleaner element (see page 11-367), then go to step 15.

   NO—Go to step 4.

4. Turn the ignition switch to LOCK (0).

5. Turn the ignition switch to ON (II).

6. Check the MAF SENSOR in the DATA LIST with the HDS.

   Is there about 0.2 gm/s or 0.5 V?

   YES—Go to step 7.

   NO—Go to step 13.

7. Start the engine.

8. Vary the engine speed is between 2,000 rpm and 3,000 rpm.

9. Check the MAF SENSOR in the DATA LIST with the HDS.

   Does the reading change?

   YES—Go to step 10.

   NO—Go to step 13.

10. Hold the engine speed at 3,000 rpm without load (in P or N) until the radiator fan comes on, then let it idle.

11. Test-drive the vehicle for several minutes in the range of these recorded freeze data parameters:

    - ENGINE SPEED
    - VSS
    - MAP SENSOR
    - MAF SENSOR

12. Monitor the OBD STATUS for DTC P0101 in the DTCs MENU with the HDS.

    Does the screen indicate FAILED?

    YES—Go to step 13.

    NO—If the screen indicates PASSED, intermittent failure, the system is OK at this time. Check for poor connections or loose terminals at the MAF sensor/IAT sensor and the PCM. If the screen indicates NOT COMPLETED, go to step 11 and recheck.

13. Turn the ignition switch to LOCK (0).

14. Replace the MAF sensor/IAT sensor (see page 11-225).

15. Turn the ignition switch to ON (II).

16. Reset the PCM with the HDS.

17. Do the PCM idle learn procedure (see page 11-313).

18. Test-drive the vehicle for several minutes in the range of these recorded freeze data parameters:

    - ENGINE SPEED
    - VSS
    - MAP SENSOR
    - MAF SENSOR

19. Check for Pending or Confirmed DTCs with the HDS.

    Is DTC P0101 indicated?

    YES—Check for poor connections or loose terminals at the MAF sensor and the PCM, then go to step 1.

    NO—Go to step 20.

20. Monitor the OBD STATUS for DTC P0101 in the DTCs MENU with the HDS.

    Does the screen indicate PASSED?

    YES—Troubleshooting is complete. If any other Pending or Confirmed DTCs were indicated in step 19, go to the indicated DTC's troubleshooting. ■

    NO—If the screen indicates FAILED, check for poor connections or loose terminals at the MAF sensor/IAT sensor and the PCM, then go to step 1. If the screen indicates NOT COMPLETED, go to step 18.

DTC P0102: MAF Sensor Circuit Low Voltage

NOTE: Before you troubleshoot, record all freeze data and any on-board snapshot, and review the general troubleshooting information (see page 11-3).

1. Turn the ignition switch to ON (II), and wait 2 seconds.

2. Check the MAF SENSOR in the DATA LIST with the HDS.

   Is about 0 gm/s, or 0.1 V or less indicated?

   YES—Go to step 3.

   NO—Intermittent failure, the system is OK at this time. Check for poor connections or loose terminals at the MAF sensor/IAT sensor and the PCM. ■

3. Check the No. 20 IGN SOL (15 A) fuse in the under-dash fuse/relay box.

   Is the fuse OK?

   YES—Go to step 4.

   NO—Repair short in the wire between the MAF sensor/IAT sensor or the PCM and the No. 20 IGN SOL (15 A) fuse. Also replace the No. 20 IGN SOL (15 A) fuse, then go to step 20.

4. Turn the ignition switch to LOCK (0).

5. Disconnect the MAF sensor/IAT sensor 5P connector.

6. Turn the ignition switch to ON (II).

(cont'd)

DTC Troubleshooting (cont'd)

7. Measure the voltage between MAF sensor/IAT sensor 5P connector terminal No. 5 and body ground.

MAF SENSOR/IAT SENSOR 5P CONNECTOR

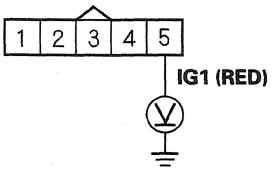

Wire side of female terminals

Is there battery voltage?

YES—Go to step 8.

NO—Repair open in the wire between the No. 20 IGN SOL (15 A) fuse and the MAF sensor/IAT sensor, then go to step 21.

8. Turn the ignition switch to LOCK (0).

9. Measure the resistance between MAF sensor/IAT sensor 5P connector terminal No. 3 and body ground.

MAF SENSOR/IAT SENSOR 5P CONNECTOR

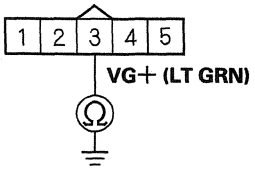

Wire side of female terminals

Is there 190—210 kΩ ?

YES—Go to step 15.

NO—Go to step 10.

10. Jump the SCS line with the HDS.

11. Disconnect PCM connector D (17P).

12. Check for continuity between PCM connector terminal D10 and body ground.

PCM CONNECTOR D (17P)

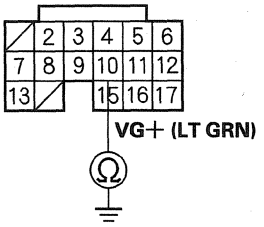

Wire side of female terminals

Is there continuity?

YES—Repair short in the wire between the PCM (D17) and the MAF sensor/IAT sensor, then go to step 22.

NO—Go to step 13.

13. Connect MAF sensor/IAT sensor 5P connector terminal No. 3 to body ground with a jumper wire.

MAF SENSOR/IAT SENSOR 5P CONNECTOR

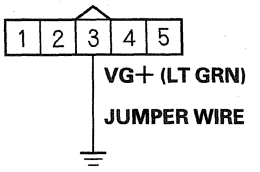

Wire side of female terminals

14. Check for continuity between PCM connector terminal D10 and body ground.

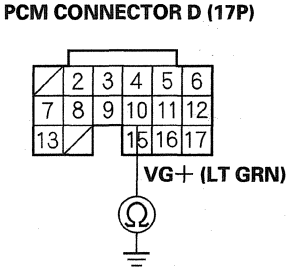

Wire side of female terminals

Is there continuity?

YES—Go to step 27.

NO—Repair open in the wire between the PCM (D17) and the MAF sensor/IAT sensor, then go to step 22.

15. Substitute a known-good MAF sensor/IAT sensor (see page 11-225).
16. Reconnect all connectors.
17. Turn the ignition switch to ON (II).
18. Clear the DTC with the HDS.
19. Start the engine. Hold the engine speed at 2,000 rpm without load (in P or N).
20. Check for Pending or Confirmed DTCs with the HDS.

Is DTC P0102 indicated?

YES—Reinstall the original MAF sensor/IAT sensor, and go to step 28.

NO—Replace the original MAF sensor/IAT sensor (see page 11-225), then go to step 21.

21. Turn the ignition switch to LOCK (0).
22. Reconnect all connectors.
23. Turn the ignition switch to ON (II).
24. Reset the PCM with the HDS.
25. Do the PCM idle learn procedure (see page 11-313).
26. Check for Pending or Confirmed DTCs with the HDS.

Is DTC P0102 indicated?

YES—Check for poor connections or loose terminals at the MAF sensor/IAT sensor and the PCM, then go to step 1.

NO—Troubleshooting is complete. If any other Pending or Confirmed DTCs are indicated, go to the indicated DTC's troubleshooting. ■

27. Reconnect all connectors.
28. Update the PCM if it does not have the latest software (see page 11-230), or substitute a known-good PCM (see page 11-7).
29. Check for Pending or Confirmed DTCs with the HDS.

Is DTC P0102 indicated?

YES—Check for poor connections or loose terminals at the MAF sensor/IAT sensor and the PCM. If the PCM was updated, substitute a known-good PCM (see page 11-7), then recheck. If the PCM was substituted, go to step 1.

NO—If the PCM was updated, troubleshooting is complete. If the PCM was substituted, replace the original PCM (see page 11-232). If any other Pending or Confirmed DTCs are indicated, go to the indicated DTC's troubleshooting. ■

DTC Troubleshooting (cont'd)

DTC P0103: MAF Sensor Circuit High Voltage

NOTE: Before you troubleshoot, record all freeze data and any on-board snapshot, and review the general troubleshooting information (see page 11-3).

1. Turn the ignition switch to ON (II), and wait 2 seconds.
2. Check the MAF SENSOR in the DATA LIST with the HDS.

   Is about 202 gm/s, or 4.89 V or more indicated?

   YES—Go to step 3.

   NO—Intermittent failure, the system is OK at this time. Check for poor connections or loose terminals at the MAF sensor and the PCM. ■
3. Turn the ignition switch to LOCK (0).
4. Jump the SCS line with the HDS.
5. Disconnect the MAF sensor/IAT sensor 5P connector.
6. Disconnect PCM connector D (17P).
7. Connect MAF sensor/IAT sensor 5P connector terminal No. 4 to body ground with a jumper wire.

MAF SENSOR/IAT SENSOR 5P CONNECTOR

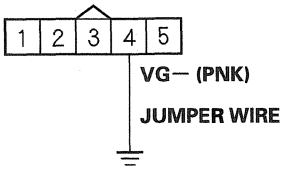

Wire side of female terminals

8. Check for continuity between PCM connector terminal D11 and body ground.

PCM CONNECTOR D (17P)

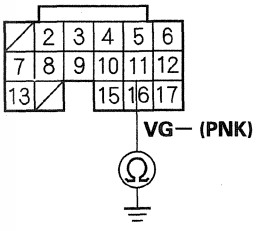

Wire side of female terminals

Is there continuity?

YES—Go to step 9.

NO—Repair open in the wire between the PCM (D11) and the MAF sensor/IAT sensor, then go to step 16.

9. Reconnect PCM connector D (17P).

10. Connect MAF sensor/IAT sensor 5P connector terminals No. 3 and No. 4 with a jumper wire.

MAF SENSOR/IAT SENSOR 5P CONNECTOR

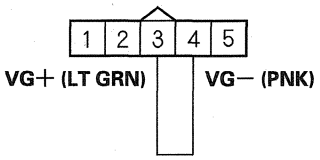

Wire side of female terminals

11. Turn the ignition switch to ON (II).

12. Clear the DTC with the HDS.

13. Check for Pending or Confirmed DTCs with the HDS.

Is DTC P0103 indicated?

YES—Go to step 21.

NO—Go to step 14.

14. Turn the ignition switch to LOCK (0).

15. Replace the MAF sensor/IAT sensor (see page 11-225).

16. Reconnect all connectors.

17. Turn the ignition switch to ON (II).

18. Reset the PCM with the HDS.

19. Do the PCM idle learn procedure (see page 11-313).

20. Check for Pending or Confirmed DTCs with the HDS.

Is DTC P0103 indicated?

YES—Check for poor connections or loose terminals at the MAF sensor/IAT sensor and the PCM, then go to step 1.

NO—Troubleshooting is complete. If any other Pending or Confirmed DTCs are indicated, go to the indicated DTC's troubleshooting. ■

21. Turn the ignition switch to LOCK (0).

22. Reconnect all connectors.

23. Update the PCM if it does not have the latest software (see page 11-230), or substitute a known-good PCM (see page 11-7).

24. Check for Pending or Confirmed DTCs with the HDS.

Is DTC P0103 indicated?

YES—Check for poor connections or loose terminals at the MAF sensor/IAT sensor and the PCM. If the PCM was updated, substitute a known-good PCM (see page 11-7), then recheck. If the PCM was substituted, go to step 1.

NO—If the PCM was updated, troubleshooting is complete. If the PCM was substituted, replace the original PCM (see page 11-232). If any other Pending or Confirmed DTCs are indicated, go to the indicated DTC's troubleshooting. ■

DTC Troubleshooting (cont'd)

DTC P0107: MAP Sensor Circuit Low Voltage

NOTE: Before you troubleshoot, record all freeze data and any on-board snapshot, and review the general troubleshooting information (see page 11-3).

1. Turn the ignition switch to ON (II).
2. Check the MAP SENSOR in the DATA LIST with the HDS.

   Is about 3 kPa (1.0 in.Hg, 26 mmHg), or 0.23 V or less indicated?

   YES—Go to step 3.

   NO—Intermittent failure, the system is OK at this time. Check for poor connections or loose terminals at the MAP sensor and the PCM. ■
3. Turn the ignition switch to LOCK (0).
4. Disconnect the MAP sensor 3P connector.
5. Turn the ignition switch to ON (II).
6. Check the MAP SENSOR in the DATA LIST with the HDS.

   Is about 3 kPa (1.0 in.Hg, 26 mmHg), or 0.23 V or less indicated?

   YES—Go to step 9.

   NO—Go to step 7.
7. Measure the voltage between MAP sensor 3P connector terminals No. 1 and No. 3.

MAP SENSOR 3P CONNECTOR

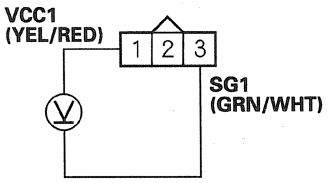

Wire side of female terminals

Is there about 5 V?

YES—Go to step 13.

NO—Go to step 8.

8. Measure the voltage between PCM connector terminals C4 and C6.

PCM CONNECTOR C (22P)

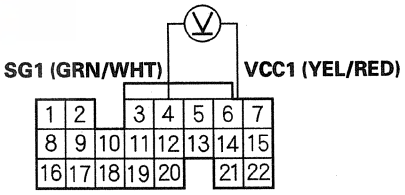

Wire side of female terminals

Is there about 5 V?

YES—Repair open in the wire between the PCM (C6) and the MAP sensor, then go to step 15.

NO—Go to step 20.

9. Turn the ignition switch to LOCK (0).
10. Jump the SCS line with the HDS.
11. Disconnect PCM connector C (22P).
12. Check for continuity between MAP sensor 3P connector terminal No. 2 and body ground.

MAP SENSOR 3P CONNECTOR

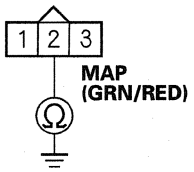

Wire side of female terminals

Is there continuity?

YES—Repair short in the wire between the PCM (C5) and the MAP sensor, then go to step 15.

NO—Go to step 20.

13. Turn the ignition switch to LOCK (0).
14. Replace the MAP sensor (see page 11-225).
15. Reconnect all connectors.
16. Turn the ignition switch to ON (II).
17. Reset the PCM with the HDS.
18. Do the PCM idle learn procedure (see page 11-313).
19. Check for Pending or Confirmed DTCs with the HDS.

Is DTC P0107 indicated?

YES—Check for poor connections or loose terminals at the MAP sensor and the PCM, then go to step 1.

NO—Troubleshooting is complete. If any other Pending or Confirmed DTCs are indicated, go to the indicated DTC's troubleshooting.■

20. Reconnect all connectors.
21. Update the PCM if it does not have the latest software (see page 11-230), or substitute a known-good PCM (see page 11-7).
22. Check for Pending or Confirmed DTCs with the HDS.

Is DTC P0107 indicated?

YES—Check for poor connections or loose terminals at the MAP sensor and the PCM. If the PCM was updated, substitute a known-good PCM (see page 11-7), then recheck. If the PCM was substituted, go to step 1.

NO—If the PCM was updated, troubleshooting is complete. If the PCM was substituted, replace the original PCM (see page 11-232). If any other Pending or Confirmed DTCs are indicated, go to the indicated DTC's troubleshooting.■

DTC Troubleshooting (cont'd)

DTC P0108: MAP Sensor Circuit High Voltage

NOTE: Before you troubleshoot, record all freeze data and any on-board snapshot, and review the general troubleshooting information (see page 11-3).

1. Turn the ignition switch to ON (II).
2. Check the MAP SENSOR in the DATA LIST with the HDS.

   Is 160 kPa (47.1 in.Hg, 1,197 mmHg), or 4.49 V or more indicated?

   YES—Go to step 3.

   NO—Intermittent failure, the system is OK at this time. Check for poor connections or loose terminals at the MAP sensor and the PCM. ■
3. Turn the ignition switch to LOCK (0).
4. Disconnect the MAP sensor 3P connector.
5. Connect MAP sensor 3P connector terminals No. 2 and No. 3 with a jumper wire.

MAP SENSOR 3P CONNECTOR

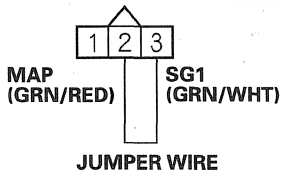

Wire side of female terminals

6. Turn the ignition switch to ON (II).
7. Check the MAP SENSOR in the DATA LIST with the HDS.

   Is 160 kPa (47.1 in.Hg, 1,197 mmHg), or 4.49 V or more indicated?

   YES—Go to step 8.

   NO—Go to step 19.
8. Remove the jumper wire from the MAP sensor 3P connector.
9. Measure the voltage between MAP sensor 3P connector terminals No. 1 and No. 3.

MAP SENSOR 3P CONNECTOR

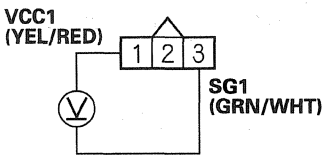

Wire side of female terminals

Is there about 5 V?

YES—Go to step 15.

NO—Go to step 10.

10. Turn the ignition switch to LOCK (0).
11. Jump the SCS line with the HDS.
12. Disconnect PCM connector C (22P).
13. Connect MAP sensor 3P connector terminal No. 3 to body ground with a jumper wire.

MAP SENSOR 3P CONNECTOR

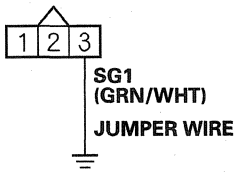

Wire side of female terminals

14. Check for continuity between PCM connector terminal C4 and body ground.

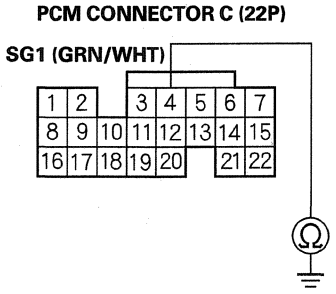

Wire side of female terminals

Is there continuity?

YES—Go to step 26.

NO—Repair open in the wire between the PCM (C4) and the MAP sensor, then go to step 21.

15. Turn the ignition switch to LOCK (0).

16. Connect PCM connector terminals C4 and C5 with a jumper wire.

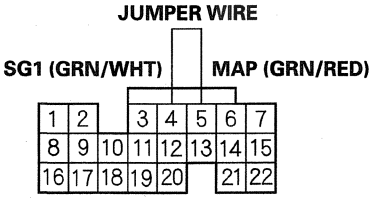

Wire side of female terminals

17. Turn the ignition switch to ON (II).

18. Check the MAP SENSOR in the DATA LIST with the HDS.

Is 160 kPa (47.1 in.Hg, 1,197 mmHg), or 4.49 V or more indicated?

YES—Go to step 26.

NO—Repair open in the wire between the PCM (C5) and the MAP sensor, then go to step 21.

19. Turn the ignition switch to LOCK (0).

20. Replace the MAP sensor (see page 11-225).

21. Reconnect all connectors.

22. Turn the ignition switch to ON (II).

23. Reset the PCM with the HDS.

24. Do the PCM idle learn procedure (see page 11-313).

25. Check for Pending or Confirmed DTCs with the HDS.

Is DTC P0108 indicated?

YES—Check for poor connections or loose terminals at the MAP sensor and the PCM, then go to step 1.

NO—Troubleshooting is complete. If any other Pending or Confirmed DTCs are indicated, go to the indicated DTC's troubleshooting. ■

26. Reconnect all connectors.

27. Update the PCM if it does not have the latest software (see page 11-230), or substitute a known-good PCM (see page 11-7).

28. Check for Pending or Confirmed DTCs with the HDS.

Is DTC P0108 indicated?

YES—Check for poor connections or loose terminals at the MAP sensor and the PCM. If the PCM was updated, substitute a known-good PCM (see page 11-7), then recheck. If the PCM was substituted, go to step 1.

NO—If the PCM was updated, troubleshooting is complete. If the PCM was substituted, replace the original PCM (see page 11-232). If any other Pending or Confirmed DTCs are indicated, go to the indicated DTC's troubleshooting. ■

DTC Troubleshooting (cont'd)

DTC P0111: IAT Sensor Circuit Range/ Performance Problem

NOTE: Before you troubleshoot, record all freeze data and any on-board snapshot, and review the general troubleshooting information (see page 11-3).

1. Check for poor connections or loose terminals at ECT sensors 1 and 2, and the MAF sensor/IAT sensor.

   Are the connections and terminals OK?

   YES—Go to step 2.

   NO—Repair the connections or terminals, then go to step 15.

2. Remove the MAF sensor/IAT sensor (see page 11-225).
3. Allow the IAT sensor to cool to the ambient temperature.
4. Note the ambient temperature.
5. Connect the MAF sensor/IAT sensor to its 5P connector, but do not install it.
6. Turn the ignition switch to ON (II).
7. Note the value of the IAT SENSOR quickly in the DATA LIST with the HDS.
8. Compare the value of the IAT SENSOR to the ambient temperature.

   Does the value of the IAT SENSOR differ 5.4 °F (3 °C) or more from the ambient temperature?

   YES—Go to step 13.

   NO—Go to step 9.

9. Disconnect the MAF sensor/IAT sensor from its 5P connector.
10. Using a heat gun, blow hot air on the MAF sensor/ IAT sensor for a few seconds. Do not apply the heat longer than a few seconds or you will damage the sensor.
11. Connect the MAF sensor/IAT sensor to its 5P connector, but do not install it.
12. Check the IAT SENSOR in the DATA LIST with the HDS.

    Does the IAT SENSOR change 58 °F (32 °C) or more from the ambient temperature?

    YES—Intermittent failure, the system is OK at this time. Check for poor connections or loose terminals at the MAF sensor/IAT sensor and the PCM. ■

    NO—Go to step 13.

13. Turn the ignition switch to LOCK (0).
14. Replace the MAF sensor/IAT sensor (see page 11-225).
15. Turn the ignition switch to ON (II).
16. Reset the PCM with the HDS.
17. Do the PCM idle learn procedure (see page 11-313).
18. Check for Pending or Confirmed DTCs with the HDS.

    Is DTC P0111 indicated?

    YES—Check for poor connections or loose terminals at the MAF sensor/IAT sensor and the PCM, then go to step 1.

    NO—Troubleshooting is complete. If any other Pending or Confirmed DTCs are indicated, go to the indicated DTC's troubleshooting. ■

DTC P0112: IAT Sensor Circuit Low Voltage

NOTE: Before you troubleshoot, record all freeze data and any on-board snapshot, and review the general troubleshooting information (see page 11-3).

1. Turn the ignition switch to ON (II).
2. Check the IAT SENSOR in the DATA LIST with the HDS.

   Is about 356 °F (180 °C) or more, or 0.08 V or less indicated?

   YES—Go to step 3.

   NO—Intermittent failure, the system is OK at this time. Check for poor connections or loose terminals at the MAF sensor/IAT sensor and the PCM. ■
3. Turn the ignition switch to LOCK (0).
4. Disconnect the MAF sensor/IAT sensor 5P connector.
5. Turn the ignition switch to ON (II).
6. Check the IAT SENSOR in the DATA LIST with the HDS.

   Is about 356 °F (180 °C) or more, or 0.08 V or less indicated?

   YES—Go to step 7.

   NO—Go to step 11.
7. Turn the ignition switch to LOCK (0).
8. Jump the SCS line with the HDS.
9. Disconnect PCM connector A (31P).
10. Check for continuity between MAF sensor/IAT sensor 5P connector terminal No. 2 and body ground.

MAF SENSOR/IAT SENSOR 5P CONNECTOR

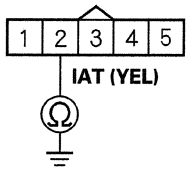

Wire side of female terminals

Is there continuity?

YES—Repair short in the wire between the MAF sensor/IAT sensor and the PCM (A5), then go to step 13.

NO—Go to step 18.

11. Turn the ignition switch to LOCK (0).
12. Replace the MAF sensor/IAT sensor (see page 11-225).
13. Reconnect all connectors.
14. Turn the ignition switch to ON (II).
15. Reset the PCM with the HDS.
16. Do the PCM idle learn procedure (see page 11-313).
17. Check for Pending or Confirmed DTCs with the HDS.

    Is DTC P0112 indicated?

    YES—Check for poor connections or loose terminals at the MAF sensor/IAT sensor and the PCM, then go to step 1.

    NO—Troubleshooting is complete. If any other Pending or Confirmed DTCs are indicated, go to the indicated DTC's troubleshooting. ■

(cont'd)

DTC Troubleshooting (cont'd)

18. Reconnect all connectors.

19. Update the PCM if it does not have the latest software (see page 11-230), or substitute a known-good PCM (see page 11-7).

20. Check for Pending or Confirmed DTCs with the HDS.

    Is DTC P0112 indicated?

    YES—Check for poor connections or loose terminals at the MAF sensor/IAT sensor and the PCM. If the PCM was updated, substitute a known-good PCM (see page 11-7), then recheck. If the PCM was substituted, go to step 1.

    NO—If the PCM was updated, troubleshooting is complete. If the PCM was substituted, replace the original PCM (see page 11-232). If any other Pending or Confirmed DTCs are indicated, go to the indicated DTC's troubleshooting. ■

DTC P0113: IAT Sensor Circuit High Voltage

NOTE: Before you troubleshoot, record all freeze data and any on-board snapshot, and review the general troubleshooting information (see page 11-3).

1. Turn the ignition switch to ON (II).

2. Check the IAT SENSOR in the DATA LIST with the HDS.

   Is about −40 °F (−40 °C) or less, or 4.92 V or more indicated?

   YES—Go to step 3.

   NO—Intermittent failure, the system is OK at this time. Check for poor connections or loose terminals at the MAF sensor/IAT sensor and the PCM. ■

3. Turn the ignition switch to LOCK (0).

4. Disconnect the MAF sensor/IAT sensor 5P connector.

5. Connect MAF sensor/IAT sensor 5P connector terminals No. 1 and No. 2 with a jumper wire.

MAF SENSOR/IAT SENSOR 5P CONNECTOR

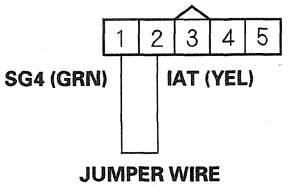

Wire side of female terminals

6. Turn the ignition switch to ON (II).

7. Check the IAT SENSOR in the DATA LIST with the HDS.

   Is about −40 °F (−40 °C) or less, or 4.92 V or more indicated?

   YES—Go to step 8.

   NO—Go to step 18.

8. Turn the ignition switch to LOCK (0).

9. Remove the jumper wire from the MAF sensor/IAT sensor 5P connector.

10. Turn the ignition switch to ON (II).

11. Measure the voltage between MAF sensor/IAT sensor 5P connector terminal No. 2 and body ground.

MAF SENSOR/IAT SENSOR 5P CONNECTOR

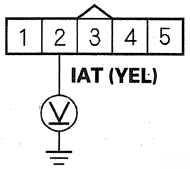

Wire side of female terminals

Is there about 5 V?

YES—Go to step 12.

NO—Go to step 17.

12. Turn the ignition switch to LOCK (0).

13. Jump the SCS line with the HDS.

14. Disconnect PCM connector E (31P).

15. Connect MAF sensor/IAT sensor 5P connector terminal No. 1 to body ground with a jumper wire.

MAF SENSOR/IAT SENSOR 5P CONNECTOR

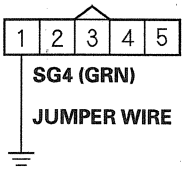

Wire side of female terminals

16. Check for continuity between PCM connector terminal E1 and body ground.

PCM CONNECTOR E (31P)

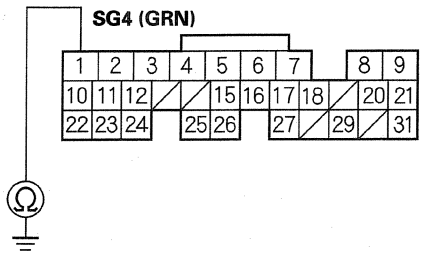

Wire side of female terminals

Is there continuity?

YES—Go to step 25.

NO—Repair open in the wire between the PCM (E1) and the MAF sensor/IAT sensor, then go to step 20.

17. Measure the voltage between PCM connector terminal A5 and body ground.

PCM CONNECTOR A (31P)

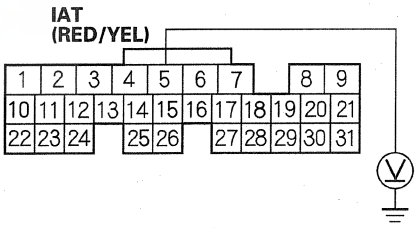

Wire side of female terminals

Is there about 5 V?

YES—Repair open in the wire between the PCM (A5) and the MAF sensor/IAT sensor, then go to step 20.

NO—Go to step 25.

(cont'd)

DTC Troubleshooting (cont'd)

18. Turn the ignition switch to LOCK (0).
19. Replace the MAF sensor/IAT sensor (see page 11-225).
20. Reconnect all connectors.
21. Turn the ignition switch to ON (II).
22. Reset the PCM with the HDS.
23. Do the PCM idle learn procedure (see page 11-313).
24. Check for Pending or Confirmed DTCs with the HDS.

    Is DTC P0113 indicated?

    YES—Check for poor connections or loose terminals at the MAF sensor/IAT sensor and the PCM, then go to step 1.

    NO—Troubleshooting is complete. If any other Pending or Confirmed DTCs are indicated, go to the indicated DTC's troubleshooting. ■
25. Reconnect all connectors.
26. Update the PCM if it does not have the latest software (see page 11-230), or substitute a known-good PCM (see page 11-7).
27. Check for Pending or Confirmed DTCs with the HDS.

    Is DTC P0113 indicated?

    YES—Check for poor connections or loose terminals at the MAF sensor/IAT sensor and the PCM. If the PCM was updated, substitute a known-good PCM (see page 11-7), then recheck. If the PCM was substituted, go to step 1.

    NO—If the PCM was updated, troubleshooting is complete. If the PCM was substituted, replace the original PCM (see page 11-232). If any other Pending or Confirmed DTCs are indicated, go to the indicated DTC's troubleshooting. ■

DTC P0116: ECT Sensor 1 Circuit Range/ Performance Problem

NOTE: Before you troubleshoot, record all freeze data and any on-board snapshot, and review the general troubleshooting information (see page 11-3).

1. Turn the ignition switch to ON (II).
2. Check ECT SENSOR 1 in the DATA LIST with the HDS.

   Is about 176 °F (80 °C) or higher, or 0.78 V or less indicated?

   YES—Go to step 6.

   NO—Go to step 3.
3. Note the value of ECT SENSOR 1 in the DATA LIST with the HDS.
4. Start the engine. Hold the engine speed at 3,000 rpm without load (P or N) until the radiator fan comes on, then let it idle.
5. Check ECT SENSOR 1 in the DATA LIST with the HDS.

   Does ECT SENSOR 1 change 18 °F (10 °C) or more?

   YES—Intermittent failure, the system is OK at this time. Check for poor connections or loose terminals at ECT sensor 1 and the PCM. ■

   NO—Go to step 11.
6. Note the value of ECT SENSOR 1 in the DATA LIST with the HDS.
7. Turn the ignition switch to LOCK (0).
8. Open the hood, and let the engine cool for 3 hours.
9. Turn the ignition switch to ON (II).

10. Check ECT SENSOR 1 in the DATA LIST with the HDS.

    Does ECT SENSOR 1 change 18 °F (10 °C) or more?

    YES—Intermittent failure, the system is OK at this time. Check for poor connections or loose terminals at ECT sensor 1 and the PCM. ■

    NO—Go to step 11.

11. Turn the ignition switch to LOCK (0).
12. Replace ECT sensor 1 (see page 11-226).
13. Turn the ignition switch to ON (II).
14. Reset the PCM with the HDS.
15. Do the PCM idle learn procedure (see page 11-313).
16. Check for Pending or Confirmed DTCs with the HDS.

    Is DTC P0116 indicated?

    YES—Check for poor connections or loose terminals at ECT sensor 1 and the PCM, then go to step 1.

    NO—Troubleshooting is complete. If any other Pending or Confirmed DTCs are indicated, go to the indicated DTC's troubleshooting. ■

DTC P0117: ECT Sensor 1 Circuit Low Voltage

NOTE: Before you troubleshoot, record all freeze data and any on-board snapshot, and review the general troubleshooting information (see page 11-3).

1. Turn the ignition switch to ON (II).
2. Check ECT SENSOR 1 in the DATA LIST with the HDS.

    Is about 356 °F (180 °C) or more, or 0.08 V or less indicated?

    YES—Go to step 3.

    NO—Intermittent failure, the system is OK at this time. Check for poor connections or loose terminals at ECT sensor 1 and the PCM. ■

3. Turn the ignition switch to LOCK (0).
4. Disconnect the ECT sensor 1 2P connector.
5. Turn the ignition switch to ON (II).
6. Check ECT SENSOR 1 in the DATA LIST with the HDS.

    Is about 356 °F (180 °C) or more, or 0.08 V or less indicated?

    YES—Go to step 7.

    NO—Go to step 11.

7. Turn the ignition switch to LOCK (0).
8. Jump the SCS line with the HDS.
9. Disconnect PCM connector C (49P).

(cont'd)

DTC Troubleshooting (cont'd)

10. Check for continuity between ECT sensor 1 2P connector terminal No. 1 and body ground.

ECT SENSOR 1 2P CONNECTOR

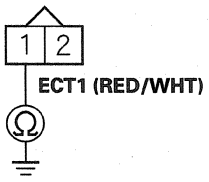

Wire side of female terminals

Is there continuity?

YES—Repair short in the wire between ECT sensor 1 and the PCM (A14), then go to step 13.

NO—Go to step 18.

11. Turn the ignition switch to LOCK (0).
12. Replace ECT sensor 1 (see page 11-226).
13. Reconnect all connectors.
14. Turn the ignition switch to ON (II).
15. Reset the PCM with the HDS.
16. Do the PCM idle learn procedure (see page 11-313).
17. Check for Pending or Confirmed DTCs with the HDS.

Is DTC P0117 indicated?

YES—Check for poor connections or loose terminals at ECT sensor 1 and the PCM, then go to step 1.

NO—Troubleshooting is complete. If any other Pending or Confirmed DTCs are indicated, go to the indicated DTC's troubleshooting. ■

18. Reconnect all connectors.
19. Update the PCM if it does not have the latest software (see page 11-230), or substitute a known-good PCM (see page 11-7).
20. Check for Pending or Confirmed DTCs with the HDS.

Is DTC P0117 indicated?

YES—Check for poor connections or loose terminals at ECT sensor 1 and the PCM. If the PCM was updated, substitute a known-good PCM (see page 11-7), then recheck. If the PCM was substituted, go to step 1.

NO—If the PCM was updated, troubleshooting is complete. If the PCM was substituted, replace the original PCM (see page 11-232). If any other Pending or Confirmed DTCs are indicated, go to the indicated DTC's troubleshooting. ■

DTC P0118: ECT Sensor 1 Circuit High Voltage

NOTE: Before you troubleshoot, record all freeze data and any on-board snapshot, and review the general troubleshooting information (see page 11-3).

1. Turn the ignition switch to ON (II).
2. Check ECT SENSOR 1 in the DATA LIST with the HDS.

   Is about −40 °F (−40 °C) or less, or 4.90 V or more indicated?

   YES—Go to step 3.

   NO—Intermittent failure, the system is OK at this time. Check for poor connections or loose terminals at ECT sensor 1 and the PCM. ■
3. Turn the ignition switch to LOCK (0).
4. Disconnect the ECT sensor 1 2P connector.
5. Connect ECT sensor 1 2P connector terminals No. 1 and No. 2 with a jumper wire.

ECT SENSOR 1 2P CONNECTOR

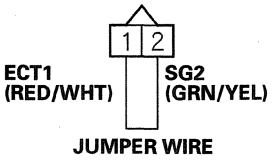

Wire side of female terminals

6. Turn the ignition switch to ON (II).
7. Check ECT SENSOR 1 in the DATA LIST with the HDS.

   Is about −40 °F (−40 °C) or less, or 4.90 V or more indicated?

   YES—Go to step 8.

   NO—Go to step 18.
8. Turn the ignition switch to LOCK (0).
9. Remove the jumper wire from ECT sensor 1 2P connector.
10. Turn the ignition switch to ON (II).
11. Measure the voltage between ECT sensor 1 2P connector terminal No. 1 and body ground.

ECT SENSOR 1 2P CONNECTOR

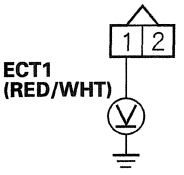

Wire side of female terminals

Is there about 5 V?

YES—Go to step 12.

NO—Go to step 17.

12. Turn the ignition switch to LOCK (0).
13. Jump the SCS line with the HDS.
14. Disconnect PCM connector C (22P).
15. Connect ECT sensor 1 2P connector terminal No. 2 to body ground with a jumper wire.

ECT SENSOR 1 2P CONNECTOR

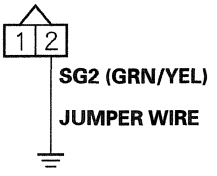

Wire side of female terminals

(cont'd)

DTC Troubleshooting (cont'd)

16. Check for continuity between PCM connector terminal C12 and body ground.

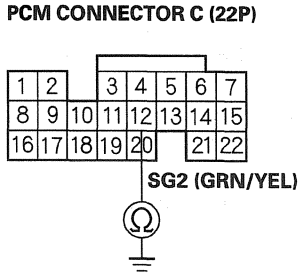

Wire side of female terminals

Is there continuity?

YES—Go to step 25.

NO—Repair open in the wire between the PCM (C12) and ECT sensor 1, then go to step 20.

17. Measure the voltage between PCM connector terminal A14 and body ground.

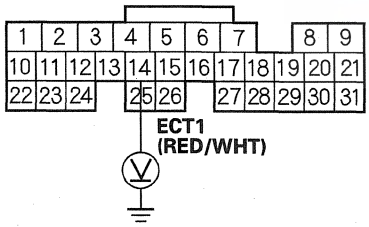

Wire side of female terminals

Is there about 5 V?

YES—Repair open in the wire between the PCM (A14) and ECT sensor 1, then go to step 20.

NO—Go to step 25.

18. Turn the ignition switch to LOCK (0).

19. Replace ECT sensor 1 (see page 11-226).

20. Reconnect all connectors.

21. Turn the ignition switch to ON (II).

22. Reset the PCM with the HDS.

23. Do the PCM idle learn procedure (see page 11-313).

24. Check for Pending or Confirmed DTCs with the HDS.

Is DTC P0118 indicated?

YES—Check for poor connections or loose terminals at ECT sensor 1 and the PCM, then go to step 1.

NO—Troubleshooting is complete. If any other Pending or Confirmed DTCs are indicated, go to the indicated DTC's troubleshooting. ■

25. Reconnect all connectors.

26. Update the PCM if it does not have the latest software (see page 11-230), or substitute a known-good PCM (see page 11-7).

27. Check for Pending or Confirmed DTCs with the HDS.

Is DTC P0118 indicated?

YES—Check for poor connections or loose terminals at ECT sensor 1 and the PCM. If the PCM was updated, substitute a known-good PCM (see page 11-7), then recheck. If the PCM was substituted, go to step 1.

NO—If the PCM was updated, troubleshooting is complete. If the PCM was substituted, replace the original PCM (see page 11-232). If any other Pending or Confirmed DTCs are indicated, go to the indicated DTC's troubleshooting. ■

DTC P0125: ECT Sensor 1 Malfunction/Slow Response

NOTE: Before you troubleshoot, record all freeze data and any on-board snapshot, and review the general troubleshooting information (see page 11-3).

1. Start the engine, and let it idle for 5 minutes or more.
2. Check ECT SENSOR 1 in the DATA LIST with the HDS.

   Is about 10 °F (−12 °C) or less indicated?

   YES—Check for poor connections or loose terminals at ECT sensor 1, ECT sensor 2, and the PCM. If the connections and the terminals are OK, replace ECT sensor 1 (see page 11-226), then go to step 8.

   NO—Go to step 3.
3. Turn the ignition switch to LOCK (0).
4. Allow the engine to cool to 104 °F (40 °C) or less.
5. Make sure the temperature difference between ECT SENSOR 1 and ECT SENSOR 2 is about 50 °F (10 °C) in the DATA LIST with the HDS.
6. Start the engine, and let it idle until ECT SENSOR 1 goes up to about 158 °F (70 °C).

   Does ECT sensor 2 also read about 158 °F (70 °C)?

   YES—Go to step 7.

   NO—Intermittent failure, the system is OK at this time. Check for poor connections or loose terminals at ECT sensor 1, ECT sensor 2, and the PCM. ■
7. Check the thermostat (see page 10-4).

   Is the thermostat OK?

   YES—Check for poor connections or loose terminals at ECT sensor 1, ECT sensor 2, and the PCM. If the connections and the terminals are OK, replace ECT sensor 1 (see page 11-226), then go to step 8.

   NO—Replace the thermostat (see page 10-8), then go to step 8.
8. Turn the ignition switch to ON (II).
9. Reset the PCM with the HDS.
10. Turn the ignition switch to LOCK (0).
11. Allow the engine to cool to 104 °F (40 °C) or less.
12. Make sure the temperature difference between ECT SENSOR 1 and ECT SENSOR 2 is about 50 °F (10 °C) in the DATA LIST with the HDS.
13. Start the engine, and let it idle until ECT SENSOR 1 goes up to about 158 °F (70 °C).

    Does ECT sensor 2 also read about 158 °F (70 °C)?

    YES—Go to step 1 and recheck.

    NO—Troubleshooting is complete. ■

DTC Troubleshooting (cont'd)

DTC P0128: Cooling System Malfunction

NOTE: Before you troubleshoot, record all freeze data and any on-board snapshot, and review the general troubleshooting information (see page 11-3).

1. Turn the ignition switch to ON (II).
2. Clear the DTC with the HDS.
3. Make sure the blower switch is off.
4. Check the FAN CTRL in the DATA LIST with the HDS.

   Is it OFF?

   YES—Go to step 5.

   NO—Wait until the FAN CTRL is off, then go to step 5.
5. Check the radiator fan operation.

   Does the radiator fan keep running?

   YES—Check the cooling system (see page 10-2). If the cooling system is OK, go to step 19.

   NO—Go to step 6.
6. Let the engine cool until the coolant temperature is 104 °F (40 °C) or less.
7. Note the value of ECT SENSOR 1 and ECT SENSOR 2 in the DATA LIST with the HDS.
8. Start the engine, and let it idle.
9. Let the engine idle until ECT SENSOR 1 goes up 49 °F (27 °C) or more from the recorded temperature.
10. Check ECT SENSOR 2 in the DATA LIST with the HDS.
11. Compare the recorded value of ECT SENSOR 2 and the present value of ECT SENSOR 2.

    Did temperature rise 17 °F (9.5 °C) or more?

    YES—Test the thermostat (see page 10-4), then go to step 12.

    NO—Intermittent failure, the system is OK at this time. Check for poor connections or loose terminals at ECT sensor 1, ECT sensor 2, and the PCM. ■
12. Turn the ignition switch to ON (II).
13. Reset the PCM with the HDS.
14. Let the engine cool until the coolant temperature is between 21 °F (−6 °C) and 104 °F (40 °C).
15. Do the PCM idle learn procedure (see page 11-313).
16. Test-drive at a steady speed between 15—75 mph (24—120 km/h) for 10 minutes.
17. Check for Pending or Confirmed DTCs with the HDS.

    Is DTC P0128 indicated?

    YES—Check for poor connections or loose terminals at ECT sensor 1, ECT sensor 2, and the PCM. then go to step 1.

    NO—Go to step 18.
18. Monitor the OBD STATUS for DTC P0128 in the DTCs MENU with the HDS.

    Does the screen indicate PASSED?

    YES—Troubleshooting is complete. If any other Pending or Confirmed DTCs were indicated in step 17, go to the indicated DTC's troubleshooting. ■

    NO—If the screen indicates FAILED, check for poor connections or loose terminals at ECT sensor 1, ECT sensor 2, and the PCM, then go to step 1. If the screen indicates NOT COMPLETED, go to step 14.

19. Update the PCM if it does not have the latest software (see page 11-230), or substitute a known-good PCM (see page 11-7).

20. Let the engine cool until the coolant temperature is between 21 °F (−6 °C) and 104 °F (40 °C).

21. Start the engine. Hold the engine speed at 3,000 rpm without load (in P or N) until the radiator fan comes on, then let it idle.

22. Test-drive at a steady speed between 15—75 mph (24—120 km/h) for 10 minutes.

23. Check for Pending or Confirmed DTCs with the HDS.

    Is DTC P0128 indicated?

    YES—Check for poor connections or loose terminals at ECT sensor 1, ECT sensor 2, and the PCM. If the PCM was updated, substitute a known-good PCM (see page 11-7), then go to step 20. If the PCM was substituted, go to step 1.

    NO—Go to step 24.

24. Monitor the OBD STATUS for DTC P0128 in the DTCs MENU with the HDS.

    Does the screen indicate PASSED?

    YES—If the PCM was updated, troubleshooting is complete. If the PCM was substituted, replace the original PCM (see page 11-232). If any other Pending or Confirmed DTCs were indicated in step 23, go to the indicated DTC's troubleshooting. ■

    NO—If the screen indicates FAILED, check for poor connections or loose terminals at ECT sensor 1, ECT sensor 2, and the PCM. If the PCM was updated, substitute a known-good PCM (see page 11-7), then go to step 20. If the PCM was substituted, go to step 1. If the screen indicates NOT COMPLETED, go to step 20.

DTC P0133: Rear A/F Sensor (Bank 1, Sensor 1) Malfunction/Slow Response

DTC P0153: Front A/F Sensor (Bank 2, Sensor 1) Malfunction/Slow Response

NOTE:
- Before you troubleshoot, record all freeze data and any on-board snapshot, and review the general troubleshooting information (see page 11-3).
- If DTC P0139 and/or P0159 * is stored at the same time as DTC P0133 and/or P0153*, troubleshoot DTC P0139 and/or P0159 * first, then recheck for DTC P0133 and/or P0153*.
- Information marked with an asterisk (*) applies to the front bank (Bank 2).

1. Turn the ignition switch to ON (II).

2. Clear the DTC with the HDS.

3. Start the engine. Hold the engine speed at 3,000 rpm without load (in P or N) until the radiator fan comes on, then let it idle.

4. Test-drive under these conditions:

   - Engine coolant temperature (ECT SENSOR 1) above 158 °F (70 °C)
   - Transmission in D
   - Drive the vehicle at 25 mph (40 km/h) or less for 5 minutes, then drive at a steady speed of 32 mph (52 km/h) or more and engine speed between 1,250—2,200 rpm

5. Monitor the OBD STATUS for DTC P0133 and/or P0153* in the DTCs MENU with the HDS.

   Does the screen indicate FAILED?

   YES—Go to step 6.

   NO—If the screen indicates PASSED, intermittent failure, the system is OK at this time. Check for poor connections or loose terminals at the A/F sensor (Sensor 1) and the PCM. If the screen indicates EXECUTING, keep driving until a result comes on. If the screen indicates OUT OF CONDITION, go to step 3 and recheck.

6. Turn the ignition switch to LOCK (0).

7. Replace the A/F sensor (Sensor 1) (see page 11-227).

(cont'd)

DTC Troubleshooting (cont'd)

8. Turn the ignition switch to ON (II).
9. Reset the PCM with the HDS.
10. Do the PCM idle learn procedure (see page 11-313).
11. Start the engine. Hold the engine speed at 3,000 rpm without load (in P or N) until the radiator fan comes on, then let it idle.
12. Test-drive under these conditions:
    - Engine coolant temperature (ECT SENSOR 1) above 158 °F (70 °C)
    - Transmission in D
    - Drive the vehicle at 25 mph (40 km/h) or less for 5 minutes, then drive at a steady speed of 32 mph (52 km/h) or more and engine speed between 1,250—2,200 rpm
13. Check for Pending or Confirmed DTCs with the HDS.

    Is DTC P0133 and/or P0153 indicated?*

    YES—Check for poor connections or loose terminals at the A/F sensor (Sensor 1) and the PCM, then go to step 1.

    NO—Go to step 14.
14. Monitor the OBD STATUS for DTC P0133 and/or P0153* in the DTCs MENU with the HDS.

    Does the screen indicate PASSED?

    YES—Troubleshooting is complete. If any other Pending or Confirmed DTCs were indicated in step 13, go to the indicated DTC's troubleshooting. ■

    NO—If the screen indicates FAILED, check for poor connections or loose terminals at the A/F sensor (Sensor 1) and the PCM, then go to step 1. If the screen indicates EXECUTING, keep driving until a result comes on. If the screen indicates OUT OF CONDITION, go to step 11.

DTC P0134: Rear A/F Sensor (Bank 1, Sensor 1) Heater System Malfunction

DTC P0154: Front A/F Sensor (Bank 2, Sensor 1) Heater System Malfunction

NOTE:
- Before you troubleshoot, record all freeze data and any on-board snapshot, and review the general troubleshooting information (see page 11-3).
- If DTC P2251 and/or P2254* is stored at the same time as DTC P0134 and/or P0154*, troubleshoot DTC P2251 and/or P2254* first, then recheck for P0134 and/or P0154*.
- Information marked with an asterisk (*) applies to the front bank (Bank 2).

1. Turn the ignition switch to ON (II).
2. Clear the DTC with the HDS.
3. Start the engine, and let it idle without load (in P or N) for at least 1 minute.
4. Check for Pending or Confirmed DTCs with the HDS.

   Is DTC P0134 and/or P0154 indicated?*

   YES—Go to step 5.

   NO—Intermittent failure, the system is OK at this time. Check for poor connections or loose terminals at the A/F sensor (Sensor 1), the A/F sensor relay (LAF), and the PCM. ■
5. Turn the ignition switch to LOCK (0).
6. Jump the SCS line with the HDS.
7. Disconnect the A/F sensor (Sensor 1) 6P connector.
8. Disconnect PCM connector B (24P).

9. Connect A/F sensor (Sensor 1) 6P connector terminal No. 4 to body ground with a jumper wire.

A/F SENSOR (SENSOR 1) 6P CONNECTOR

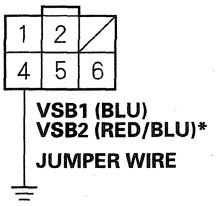

Wire side of female terminals

10. Check for continuity between PCM connector terminal B12 (B20)* and body ground.

PCM CONNECTOR B (24P)

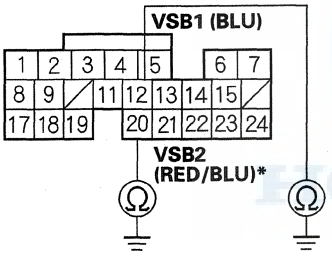

Wire side of female terminals

Is there continuity?

YES—Go to step 11.

NO—Repair open in the wire between the PCM (B12 (B20)*) and the A/F sensor (Sensor 1), then go to step 15.

11. Reconnect PCM connector B (24P).

12. Start the engine, and let it idle without load (in P or N) for at least 1 minute.

13. Measure the voltage between A/F sensor (Sensor 1) 6P connector terminal No. 4 and body ground.

A/F SENSOR (SENSOR 1) 6P CONNECTOR

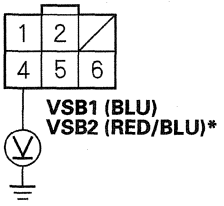

Wire side of female terminals

Is there about 0.2 V or less?

YES—Go to step 21.

NO—Go to step 14.

14. Replace the A/F sensor (Sensor 1) (see page 11-227).

15. Reconnect all connectors.

16. Turn the ignition switch to ON (II).

17. Reset the PCM with the HDS.

18. Do the PCM idle learn procedure (see page 11-313).

(cont'd)

DTC Troubleshooting (cont'd)

19. Check for Pending or Confirmed DTCs with the HDS.

    Is DTC P0134 and/or P0154 indicated?*

    YES—Check for poor connections or loose terminals at the A/F sensor (Sensor 1), the and the PCM, then go to step 1.

    NO—Go to step 20.

20. Monitor the OBD STATUS for DTC P0134 and/or P0154* in the DTCs MENU with the HDS.

    Does the screen indicate PASSED?

    YES—Troubleshooting is complete. If any other Pending or Confirmed DTCs were indicated in step 19, go to the indicated DTC's troubleshooting. ■

    NO—If the screen indicates FAILED, check for poor connections or loose terminals at the A/F sensor (Sensor 1), the A/F sensor relay (LAF), and the PCM, then go to step 1. If the screen indicates NOT COMPLETED, keep idling until a result comes on.

21. Turn the ignition switch to LOCK (0).

22. Reconnect all connectors.

23. Update the PCM if it does not have the latest software (see page 11-230), or substitute a known-good PCM (see page 11-7).

24. Start the engine, and let it idle without load (in P or N) for at least 1 minute.

25. Check for Pending or Confirmed DTCs with the HDS.

    Is DTC P0134 and/or P0154 indicated?*

    YES—Check for poor connections or loose terminals at the A/F sensor (Sensor 1), the A/F sensor relay (LAF), and the PCM. If the PCM was updated, substitute a known-good PCM (see page 11-7), then go to step 24. If the PCM was substituted, go to step 1.

    NO—Go to step 26.

26. Monitor the OBD STATUS for DTC P0134 and/or P0154* in the DTCs MENU with the HDS.

    Does the screen indicate PASSED?

    YES—If the PCM was updated, troubleshooting is complete. If the PCM was substituted, replace the original PCM (see page 11-232). If any other Pending or Confirmed DTCs were indicated in step 25, go to the indicated DTC's troubleshooting. ■

    NO—If the screen indicates FAILED, check for poor connections or loose terminals at the A/F sensor (Sensor 1), the A/F sensor relay (LAF), and the PCM. If the PCM was updated, substitute a known-good PCM (see page 11-7), then go to step 24. If the PCM was substituted, go to step 1. If the screen indicates NOT COMPLETED, keep idling until a result comes on.

DTC P0135: Rear A/F Sensor (Bank 1, Sensor 1) Heater Circuit Malfunction

DTC P0155: Front A/F Sensor (Bank 2, Sensor 1) Heater Circuit Malfunction

NOTE:
- Before you troubleshoot, record all freeze data and any on-board snapshot, and review the general troubleshooting information (see page 11-3).
- Information marked with an asterisk (*) applies to the front bank (Bank 2).

1. Turn the ignition switch to ON (II).
2. Clear the DTC with the HDS.
3. Start the engine.
4. Check for Pending or Confirmed DTCs with the HDS.

   Is DTC P0135 and/or P0155 indicated?*

   YES—Go to step 5.

   NO—Intermittent failure, the system is OK at this time. Check for poor connections or loose terminals at the A/F sensor (Sensor 1), the A/F sensor relay (LAF), and the PCM. ■
5. Turn the ignition switch to LOCK (0).
6. Check the No. 4 A/F SENSOR (15 A) fuse in the driver's under-dash fuse/relay box.

   Is the fuse OK?

   YES—Go to step 7.

   NO—Repair short in the wire between the front A/F sensor, the rear A/F sensor, the front secondary HO2S, the rear secondary HO2S, the EVAP canister vent shut valve, the A/F sensor relay, and the fuse, then replace the blown fuse, and go to step 24.
7. Disconnect the A/F sensor (Sensor 1) 6P connector.
8. At the sensor side, measure the resistance between A/F sensor (Sensor 1) 6P connector terminals No. 1 and No. 2.

A/F SENSOR (SENSOR 1) 6P CONNECTOR

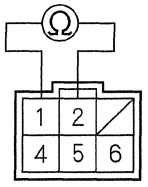

Terminal side of male terminals

Is there 2.5—2.9 Ω at room temperature?

YES—Go to step 9.

NO—Go to step 22.

9. At the sensor side, check for continuity between each terminal of the A/F sensor (Sensor 1) 6P connector and body ground.

A/F SENSOR (SENSOR 1) 6P CONNECTOR

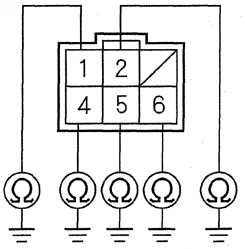

Terminal side of male terminals

Is there continuity to ground at any of the terminals?

YES—Go to step 22.

NO—Go to step 10.

(cont'd)

DTC Troubleshooting (cont'd)

10. At the sensor side, check for continuity between A/F sensor (Sensor 1) 6P connector terminals No. 1 and No. 4, No. 1 and No. 5, No. 1, and No. 6 individually.

A/F SENSOR (SENSOR 1) 6P CONNECTOR

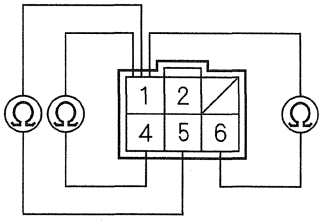

Terminal side of male terminals

Is there continuity?

YES—Go to step 22.

NO—Go to step 11.

11. Jump the SCS line with the HDS.
12. Disconnect PCM connector A (31P).
13. Check for continuity between PCM connector terminal A7 (A6)* and body ground.

PCM CONNECTOR A (31P)

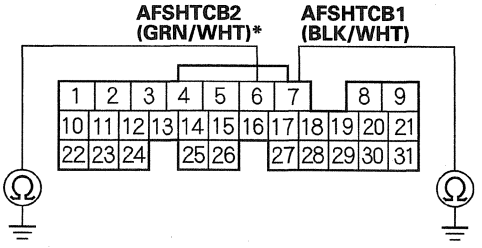

Wire side of female terminals

Is there continuity?

YES—Repair short in the wire between the PCM (A7 (A6)*) and the A/F sensor (Sensor 1), then go to step 23.

NO—Go to step 14.

14. Connect A/F sensor (Sensor 1) 6P connector terminal No. 2 to body ground with a jumper wire.

A/F SENSOR (SENSOR 1) 6P CONNECTOR

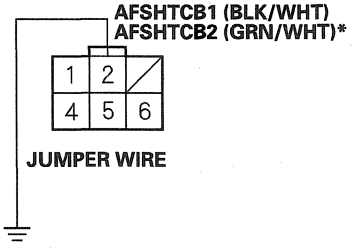

Wire side of female terminals

15. Check for continuity between PCM connector terminal A7 (A6)* and body ground.

PCM CONNECTOR A (31P)

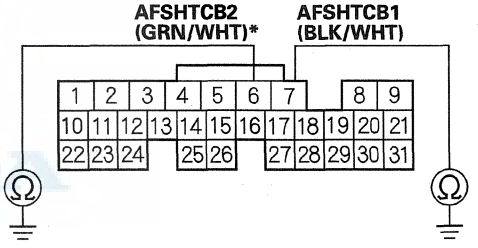

Wire side of female terminals

Is there continuity?

YES—Go to step 16.

NO—Repair open in the wire between the PCM (A7 (A6)*) and the A/F sensor (Sensor 1), then go to step 23.

16. Remove the A/F sensor relay (LAF) (A) from the driver's under-dash fuse/relay box.

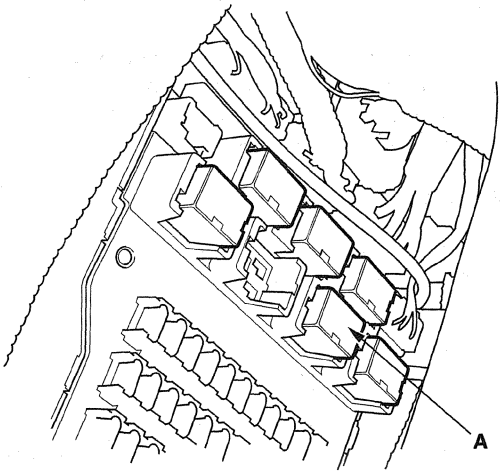

17. Connect A/F sensor (Sensor 1) 6P connector terminal No. 1 to body ground with a jumper wire.

A/F SENSOR (SENSOR 1) 6P CONNECTOR

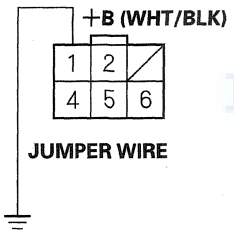

Wire side of female terminals

18. Check for continuity between A/F sensor relay (LAF) 4P connector terminal No. 2 and body ground.

A/F SENSOR RELAY (LAF) 4P CONNECTOR

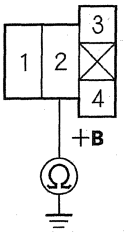

Terminal side of female terminals

Is there continuity?

YES—Go to step 19.

NO—Repair open in the wire between the A/F sensor (Sensor 1) and the A/F sensor relay (LAF), then go to step 23.

19. Disconnect PCM connector E (31P).

(cont'd)

DTC Troubleshooting (cont'd)

20. Check for continuity between PCM connector terminal E4 and A/F sensor relay (LAF) 4P connector terminal No. 3.

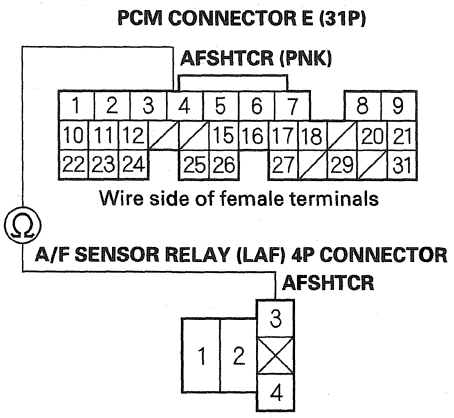

Is there continuity?

YES—Go to step 21.

NO—Repair open in the wire between the PCM (E4) and the A/F sensor relay (LAF), then go to step 23.

21. Test the A/F sensor relay (LAF) (see page 22-93).

Is the A/F sensor relay OK?

YES—Go to step 29.

NO—Replace the A/F sensor relay (LAF), then go to step 23.

22. Replace the A/F sensor (Sensor 1) (see page 11-227).

23. Reconnect all connectors.

24. Turn the ignition switch to ON (II).

25. Reset the PCM with the HDS.

26. Do the PCM idle learn procedure (see page 11-313).

27. Check for Pending or Confirmed DTCs with the HDS.

Is DTC P0135 and/or P0155 indicated?*

YES—Check for poor connections or loose terminals at the A/F sensor (Sensor 1), the A/F sensor relay (LAF), the under-dash fuse/relay box, and the PCM, then go to step 1.

NO—Go to step 28.

28. Monitor the OBD STATUS for DTC P0135 and/or P0155* in the DTCs MENU with the HDS.

Does the screen indicate PASSED?

YES—Troubleshooting is complete. If any other Pending or Confirmed DTCs were indicated in step 27, go to the indicated DTC's troubleshooting. ■

NO—If the screen indicates FAILED, check for poor connections or loose terminals at the A/F sensor (Sensor 1), the A/F sensor relay (LAF), the driver's under-dash fuse/relay box, and the PCM, then go to step 1. If the screen indicates NOT COMPLETED, keep idling until a result comes on.

29. Reconnect all connectors.

30. Update the PCM if it does not have the latest software (see page 11-230), or substitute a known-good PCM (see page 11-7).

31. Check for Pending or Confirmed DTCs with the HDS.

    Is DTC P0135 and/or P0155 indicated?*

    YES—Check for poor connections or loose terminals at the A/F sensor (Sensor 1), the A/F sensor relay (LAF), the driver's under-dash fuse/relay box, and the PCM. If the PCM was updated, substitute a known-good PCM (see page 11-7), then recheck. If the PCM was substituted, go to step 1.

    NO—Go to step 32.

32. Monitor the OBD STATUS for DTC P0135 and/or P0155* in the DTCs MENU with the HDS.

    Does the screen indicate PASSED?

    YES—If the PCM was updated, troubleshooting is complete. If the PCM was substituted, replace the original PCM (see page 11-232). If any other Pending or Confirmed DTCs were indicated in step 31, go to the indicated DTC's troubleshooting. ■

    NO—If the screen indicates FAILED, check for poor connections or loose terminals at the A/F sensor (Sensor 1), the A/F sensor relay (LAF), the driver's under-dash fuse/relay box, and the PCM. If the PCM was updated, substitute a known-good PCM (see page 11-7), then recheck. If the PCM was substituted, go to step 1. If the screen indicates NOT COMPLETED, keep idling until a result comes on.

DTC P0137: Rear Secondary HO2S (Bank 1, Sensor 2) Circuit Low Voltage

DTC P0157: Front Secondary HO2S (Bank 2, Sensor 2) Circuit Low Voltage

NOTE:
- Before you troubleshoot, record all freeze data and any on-board snapshot, and review the general troubleshooting information (see page 11-3).
- Information marked with an asterisk (*) applies to the front bank (Bank 2).

1. Turn the ignition switch to ON (II).

2. Clear the DTC with the HDS.

3. Start the engine. Hold the engine speed at 3,000 rpm without load (in P or N) until the radiator fan comes on, then let it idle.

4. Check HO2S S2 in the DATA LIST with the HDS.

   Does the voltage stay at 0.29 V or less?

   YES—Go to step 5.

   NO—Intermittent failure, the system is OK at this time. Check for poor connections or loose terminals at secondary HO2S (Sensor 2) and the PCM. ■

5. Turn the ignition switch to LOCK (0).

6. Disconnect the secondary HO2S (Sensor 2) 4P connector.

7. Turn the ignition switch to ON (II).

8. Check HO2S S2 in the DATA LIST with the HDS.

   Does the voltage stay at 0.29 V or less?

   YES—Go to step 9.

   NO—Go to step 13.

9. Turn the ignition switch to LOCK (0).

10. Jump the SCS line with the HDS.

11. Disconnect PCM connector B (24P).

(cont'd)

DTC Troubleshooting (cont'd)

12. Check for continuity between secondary HO2S (Sensor 2) 4P connector terminal No. 1 and body ground.

SECONDARY HO2S (SENSOR 2) 4P CONNECTOR

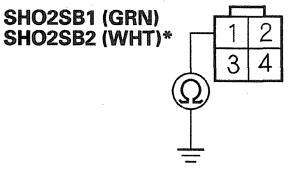

Wire side of female terminals

Is there continuity?

YES—Repair short in the wire between the PCM (B9 (B18)*) and secondary HO2S (Sensor 2), then go to step 15.

NO—Go to step 23.

13. Turn the ignition switch to LOCK (0).

14. Replace secondary HO2S (Sensor 2) (see page 11-228).

15. Reconnect all connectors.

16. Turn the ignition switch to ON (II).

17. Reset the PCM with the HDS.

18. Do the PCM idle learn procedure (see page 11-313).

19. Start the engine. Hold the engine speed at 3,000 rpm without load (in P or N) until the radiator fan comes on, then let it idle.

20. Test-drive under these conditions:

- Engine coolant temperature (ECT SENSOR 1) above 158 °F (70 °C)
- Transmission in D
- Engine speed between 1,500—3,000 rpm
- Drive 1 minute or more

21. Check for Pending or Confirmed DTCs with the HDS.

Is DTC P0137 and/or P0157 indicated?*

YES—Check for poor connections or loose terminals at secondary HO2S (Sensor 2) and the PCM, then go to step 1.

NO—Go to step 22.

22. Monitor the OBD STATUS for DTC P0137 and/or P0157* in the DTCs MENU with the HDS.

Does the screen indicate PASSED?

YES—Troubleshooting is complete. If any other Pending or Confirmed DTCs were indicated in step 21, go to the indicated DTC's troubleshooting. ■

NO—If the screen indicates FAILED, check for poor connections or loose terminals at secondary HO2S (Sensor 2) and the PCM, then go to step 1. If the screen indicates EXECUTING, keep driving until a result comes on. If the screen indicates OUT OF CONDITION, go to step 20.

23. Reconnect all connectors.

24. Update the PCM if it does not have the latest software (see page 11-230), or substitute a known-good PCM (see page 11-7).

25. Start the engine. Hold the engine speed at 3,000 rpm without load (in P or N) until the radiator fan comes on, then let it idle.

26. Test-drive under these conditions:

    - Engine coolant temperature (ECT SENSOR 1) above 158 °F (70 °C)
    - Transmission in D
    - Engine speed between 1,500—3,000 rpm
    - Drive 1 minute or more

27. Check for Pending or Confirmed DTCs with the HDS.

    Is DTC P0137 and/or P0157 indicated?*

    YES—Check for poor connections or loose terminals at secondary HO2S (Sensor 2) and the PCM. If the PCM was updated, substitute a known-good PCM (see page 11-7), then go to step 25. If the PCM was substituted, go to step 1.

    NO—Go to step 28.

28. Monitor the OBD STATUS for DTC P0137 and/or P0157* in the DTCs MENU with the HDS.

    Does the screen indicate PASSED?

    YES—If the PCM was updated, troubleshooting is complete. If the PCM was substituted, replace the original PCM (see page 11-232). If any other Pending or Confirmed DTCs were indicated in step 27, go to the indicated DTC's troubleshooting. ■

    NO—If the screen indicates FAILED, check for poor connections or loose terminals at secondary HO2S (Sensor 2) and the PCM. If the PCM was updated, substitute a known-good PCM (see page 11-7), then go to step 25. If the PCM was substituted, go to step 1. If the screen indicates NOT COMPLETED, go to step 25.

DTC P0138: Rear Secondary HO2S (Bank 1, Sensor 2) Circuit High Voltage

DTC P0158: Front Secondary HO2S (Bank 2, Sensor 2) Circuit High Voltage

NOTE:
- Before you troubleshoot, record all freeze data and any on-board snapshot, and review the general troubleshooting information (see page 11-3).
- Information marked with an asterisk (*) applies to the front bank (Bank 2).

1. Turn the ignition switch to ON (II).

2. Clear the DTC with the HDS.

3. Start the engine. Hold the engine speed at 3,000 rpm without load (in P or N) until the radiator fan comes on, then let it idle.

4. Check HO2S S2 in the DATA LIST with the HDS.

   Does the voltage stay at 1.25 V or more?

   YES—Go to step 5.

   NO—Intermittent failure, the system is OK at this time. Check for poor connections or loose terminals at secondary HO2S (Sensor 2) and the PCM. ■

5. Turn the ignition switch to LOCK (0).

6. Disconnect the secondary HO2S (Sensor 2) 4P connector.

7. Connect secondary HO2S (Sensor 2) 4P connector terminals No. 1 and No. 2 with a jumper wire.

SECONDARY HO2S (SENSOR 2) 4P CONNECTOR

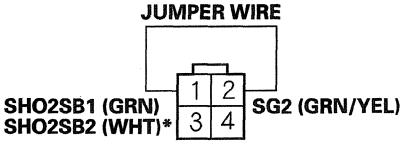

Wire side of female terminals

(cont'd)

DTC Troubleshooting (cont'd)

8. Turn the ignition switch to ON (II).
9. Check HO2S S2 in the DATA LIST with the HDS.

   Does the voltage stay at 1.25 V or more?

   YES—Go to step 10.

   NO—Go to step 19.
10. Turn the ignition switch to LOCK (0).
11. Remove the jumper wire from the secondary HO2S (Sensor 2) 4P connector.
12. Connect secondary HO2S (Sensor 2) 4P connector terminal No. 1 to body ground with a jumper wire.

SECONDARY HO2S (SENSOR 2) 4P CONNECTOR

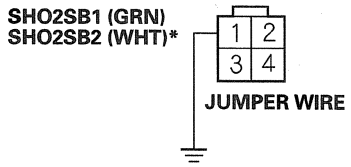

Wire side of female terminals

13. Turn the ignition switch to ON (II).
14. Check HO2S S2 in the DATA LIST with the HDS.

    Does the voltage stay at 1.25 V or more?

    YES—Go to step 15.

    NO—Repair open in the wire between the PCM (C12) and secondary HO2S (Sensor 2), then go to step 21.
15. Turn the ignition switch to LOCK (0).
16. Jump the SCS line with the HDS.
17. Disconnect PCM connector B (24P).
18. Check for continuity between PCM connector terminal B9 (B18)* and body ground.

PCM CONNECTOR B (24P)

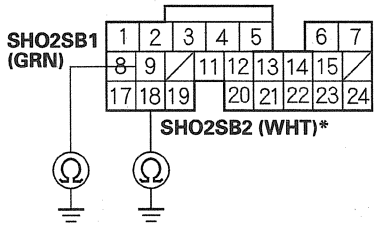

Wire side of female terminals

Is there continuity?

YES—Go to step 29.

NO—Repair open in the wire between the PCM (B9 (B18)*) and secondary HO2S (Sensor 2), then go to step 21.

19. Turn the ignition switch to LOCK (0).
20. Replace secondary HO2S (Sensor 2) (see page 11-228).
21. Reconnect all connectors.
22. Turn the ignition switch to ON (II).
23. Reset the PCM with the HDS.
24. Do the PCM idle learn procedure (see page 11-313).
25. Start the engine. Hold the engine speed at 3,000 rpm without load (in P or N) until the radiator fan comes on, then let it idle.
26. Test-drive under these conditions:

    - Engine coolant temperature (ECT SENSOR 1) above 158 °F (70 °C)
    - Transmission in D
    - Engine speed between 1,500—3,000 rpm
    - Drive 1 minute or more

27. Check for Pending or Confirmed DTCs with the HDS.

    Is DTC P0138 and/or P0158 indicated?*

    YES—Check for poor connections or loose terminals at secondary HO2S (Sensor 2) and the PCM, then go to step 1.

    NO—Go to step 28.

28. Monitor the OBD STATUS for DTC P0138 and/or P0158* in the DTCs MENU with the HDS.

    Does the screen indicate PASSED?

    YES—Troubleshooting is complete. If any other Pending or Confirmed DTCs were indicated in step 27, go to the indicated DTC's troubleshooting. ■

    NO—If the screen indicates FAILED, check for poor connections or loose terminals at secondary HO2S (Sensor 2) and the PCM, then go to step 1. If the screen indicates EXECUTING, keep driving until a result comes on. If the screen indicates OUT OF CONDITION, go to step 25.

29. Reconnect all connectors.

30. Update the PCM if it does not have the latest software (see page 11-230), or substitute a known-good PCM (see page 11-7).

31. Start the engine. Hold the engine speed at 3,000 rpm without load (in P or N) until the radiator fan comes on, then let it idle.

32. Test-drive under these conditions:

    - Engine coolant temperature (ECT SENSOR 1) above 158 °F (70 °C)
    - Transmission in D
    - Engine speed between 1,500—3,000 rpm
    - Drive 1 minute or more

33. Check for Pending or Confirmed DTCs with the HDS.

    Is DTC P0138 and/or P0158 indicated?*

    YES—Check for poor connections or loose terminals at secondary HO2S (Sensor 2) and the PCM. If the PCM was updated, substitute a known-good PCM (see page 11-7), then go to step 31. If the PCM was substituted, go to step 1.

    NO—Go to step 33.

34. Monitor the OBD STATUS for DTC P0138 and/or P0158* in the DTCs MENU with the HDS.

    Does the screen indicate PASSED?

    YES—If the PCM was updated, troubleshooting is complete. If the PCM was substituted, replace the original PCM (see page 11-232). If any other Pending or Confirmed DTCs were indicated in step 33, go to the indicated DTC's troubleshooting. ■

    NO—If the screen indicates FAILED, check for poor connections or loose terminals at secondary HO2S (Sensor 2) and the PCM. If the PCM was updated, substitute a known-good PCM (see page 11-7), then go to step 31. If the PCM was substituted, go to step 1. If the screen indicates NOT COMPLETED, go to step 31.

DTC Troubleshooting (cont'd)

DTC P0139: Rear Secondary HO2S (Bank 1, Sensor 2) Slow Response

DTC P0159: Front Secondary HO2S (Bank 2, Sensor 2) Slow Response

NOTE:
- Before you troubleshoot, record all freeze data and any on-board snapshot, and review the general troubleshooting information (see page 11-3).
- Information marked with an asterisk (*) applies to the front bank (Bank 2).

1. Turn the ignition switch to ON (II).
2. Clear the DTC with the HDS.
3. Start the engine. Hold the engine speed at 3,000 rpm without load (in P or N) until the radiator fan comes on, then let it idle.
4. Test-drive under these conditions:
   - Engine coolant temperature (ECT SENSOR 1) above 158 °F (70 °C)
   - Transmission in D
   - Drive at a steady speed between 55—75 mph (88—120 km/h) for 1 minute, then decelerate (with the throttle fully closed) for 10 seconds
5. Monitor the OBD STATUS for DTC P0139 and/or P0159* in the DTCs MENU with the HDS.

   Does the screen indicate FAILED?

   YES—Go to step 6.

   NO—If the screen indicates PASSED, intermittent failure, the system is OK at this time. Check for poor connections or loose terminals at secondary HO2S (Sensor 2) and the PCM. If the screen indicates EXECUTING, keep driving until a result comes on. If the screen indicates OUT OF CONDITION, go to step 3 and recheck.
6. Turn the ignition switch to LOCK (0).
7. Replace secondary HO2S (Sensor 2) (see page 11-228).
8. Turn the ignition switch to ON (II).
9. Reset the PCM with the HDS.
10. Do the PCM idle learn procedure (see page 11-313).
11. Start the engine. Hold the engine speed at 3,000 rpm without load (in P or N) until the radiator fan comes on, then let it idle.
12. Test-drive under these conditions:
    - Engine coolant temperature (ECT SENSOR 1) above 158 °F (70 °C)
    - Transmission in D
    - Drive at a steady speed between 55—75 mph (88—120 km/h) for 1 minute, then decelerate (with the throttle fully closed) for 10 seconds
13. Check for Pending or Confirmed DTCs with the HDS.

    Is DTC P0139 and/or P0159 indicated?*

    YES—Check for poor connections or loose terminals at secondary HO2S (Sensor 2) and the PCM, then go to step 1.

    NO—Go to step 14.
14. Monitor the OBD STATUS for DTC P0139 and/or P0159* in the DTCs MENU with the HDS.

    Does the screen indicate PASSED?

    YES—Troubleshooting is complete. If any other Pending or Confirmed DTCs were indicated in step 13, go to the indicated DTC's troubleshooting. ■

    NO—If the screen indicates FAILED, check for poor connections or loose terminals at secondary HO2S (Sensor 2) and the PCM, then go to step 1. If the screen indicates EXECUTING, keep driving until a result comes on. If the screen indicates OUT OF CONDITION, go to step 11.

DTC P0141: Rear Secondary HO2S (Bank 1, Sensor 2) Heater Circuit Malfunction

DTC P0161: Front Secondary HO2S (Bank 2, Sensor 2) Heater Circuit Malfunction

NOTE:
- Before you troubleshoot, record all freeze data and any on-board snapshot, and review the general troubleshooting information (see page 11-3).
- Information marked with an asterisk (*) applies to the front bank (Bank 2).

1. Turn the ignition switch to ON (II).
2. Clear the DTC with the HDS.
3. Start the engine.
4. Check for Pending or Confirmed DTCs with the HDS.

   Is DTC P0141 and/or P0161 indicated?*

   YES—Go to step 5.

   NO—Intermittent failure, the system is OK at this time. Check for poor connections or loose terminals at secondary HO2S (Sensor 2), the A/F sensor relay (LAF), and the PCM. ■
5. Turn the ignition switch to LOCK (0).
6. Check the No. 4 A/F SENSOR (15 A) fuse in the driver's under-dash fuse/relay box.

   Is the fuse OK?

   YES—Go to step 7.

   NO—Repair short in the wire between the front A/F sensor, the rear A/F sensor, the front secondary HO2S, the rear secondary HO2S, the EVAP canister vent shut valve, the A/F sensor relay, and the fuse, then replace the blown fuse, and go to step 23.
7. Disconnect the secondary HO2S (Sensor 2) 4P connector.
8. At the secondary HO2S (Sensor 2) side, measure the resistance between secondary HO2S (Sensor 2) 4P connector terminals No. 3 and No. 4.

SECONDARY HO2S (SENSOR 2) 4P CONNECTOR

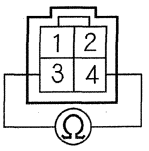

Terminal side of male terminals

Is there 5.4—6.6 Ω at room temperature?

YES—Go to step 9.

NO—Go to step 21.

9. At the secondary HO2S (Sensor 2) side, check for continuity between body ground and secondary HO2S (Sensor 2) 4P connector terminals No. 3 and No. 4 individually.

SECONDARY HO2S (SENSOR 2) 4P CONNECTOR

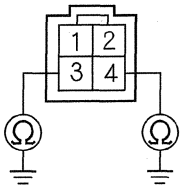

Terminal side of male terminals

Is there continuity?

YES—Go to step 21.

NO—Go to step 10.

(cont'd)

DTC Troubleshooting (cont'd)

10. Jump the SCS line with the HDS.
11. Disconnect PCM connector A (31P).
12. Check for continuity between PCM connector terminal A9 (A8)* and body ground.

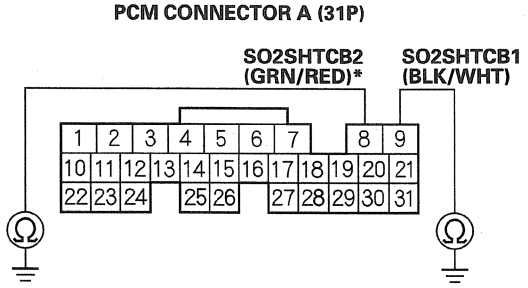

Wire side of female terminals

Is there continuity?

YES—Repair short in the wire between the PCM (E9 (E8)*) and secondary HO2S (Sensor 2), then go to step 22.

NO—Go to step 13.

13. Connect secondary HO2S (Sensor 2) 4P connector terminal No. 3 to body ground with a jumper wire.

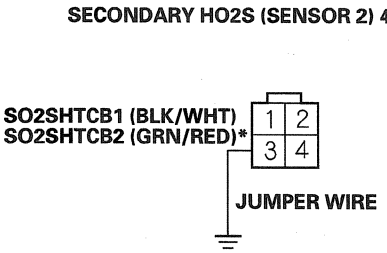

Wire side of female terminals

14. Check for continuity between PCM connector terminal A9 (A8)* and body ground.

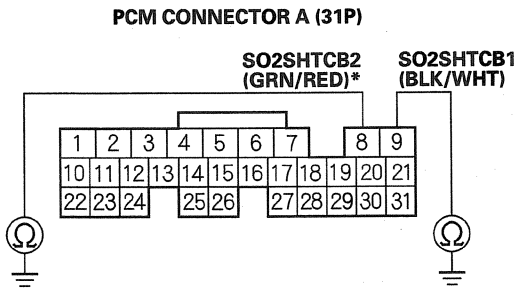

Wire side of female terminals

Is there continuity?

YES—Go to step 15.

NO—Repair open in the wire between the PCM (A9 (A8)*) and secondary HO2S (Sensor 2), then go to step 22.

15. Remove the left kick panel (see step 3 on page 20-67), then remove the A/F sensor relay (LAF) (A) from the driver's under-dash fuse/relay box.

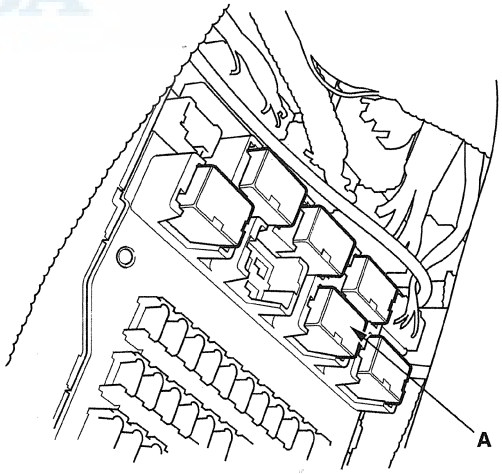

16. Connect secondary HO2S (Sensor 2) 4P connector terminal No. 4 to body ground with a jumper wire.

SECONDARY HO2S (SENSOR 2) 4P CONNECTOR

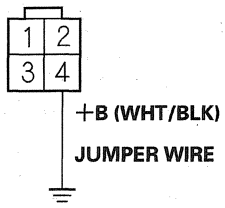

Wire side of female terminals

17. Check for continuity between A/F sensor relay (LAF) 4P connector terminal No. 2 and body ground.

A/F SENSOR RELAY (LAF) 4P CONNECTOR

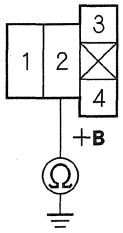

Terminal side of female terminals

Is there continuity?

YES—Go to step 18.

NO—Repair open in the wire between secondary HO2S (Sensor 2) and the A/F sensor relay (LAF), then go to step 22.

18. Disconnect PCM connector E (31P).

19. Check for continuity between PCM connector terminal E4 and A/F sensor relay (LAF) 4P connector terminal No. 3.

PCM CONNECTOR E (31P)

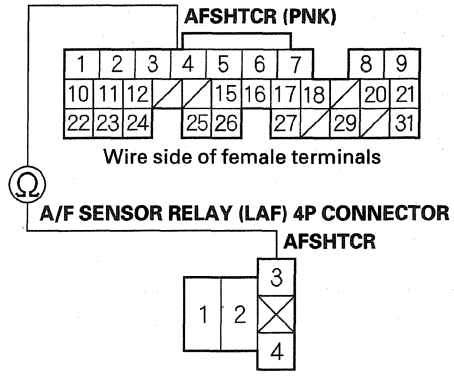

Wire side of female terminals

A/F SENSOR RELAY (LAF) 4P CONNECTOR

Terminal side of female terminals

Is there continuity?

YES—Go to step 20.

NO—Repair open in the wire between the PCM (E4) and the A/F sensor relay (LAF), then go to step 22.

20. Test the A/F sensor relay (LAF) (see page 22-93).

Is the A/F sensor relay (LAF) OK?

YES—Go to step 28.

NO—Replace the A/F sensor relay (LAF), then go to step 22.

21. Replace secondary HO2S (Sensor 2) (see page 11-228).

22. Reconnect all connectors.

23. Turn the ignition switch to ON (II).

24. Reset the PCM with the HDS.

25. Do the PCM idle learn procedure (see page 11-313).

(cont'd)

DTC Troubleshooting (cont'd)

26. Check for Pending or Confirmed DTCs with the HDS.

    Is DTC P0141 and/or P0161 indicated?*

    YES—Check for poor connections or loose terminals at secondary HO2S (Sensor 2), the A/F sensor relay (LAF), and the PCM, then go to step 1.

    NO—Go to step 27.

27. Monitor the OBD STATUS for DTC P0141 and/or P0161* in the DTCs MENU with the HDS.

    Does the screen indicate PASSED?

    YES—Troubleshooting is complete. If any other Pending or Confirmed DTCs were indicated in step 26, go to the indicated DTC's troubleshooting. ■

    NO—If the screen indicates FAILED, check for poor connections or loose terminals at secondary HO2S (Sensor 2), the A/F sensor relay (LAF), and the PCM, then go to step 1. If the screen indicates NOT COMPLETED, keep idling until a result comes on.

28. Reconnect all connectors.

29. Update the PCM if it does not have the latest software (see page 11-230), or substitute a known-good PCM (see page 11-7).

30. Check for Pending or Confirmed DTCs with the HDS.

    Is DTC P0141 and/or P0161 indicated?*

    YES—Check for poor connections or loose terminals at secondary HO2S (Sensor 2), the A/F sensor relay (LAF), and the PCM. If the PCM was updated, substitute a known-good PCM (see page 11-7), then recheck. If the PCM was substituted, go to step 1.

    NO—Go to step 31.

31. Monitor the OBD STATUS for DTC P0141 and/or P0161* in the DTCs MENU with the HDS.

    Does the screen indicate PASSED?

    YES—If the PCM was updated, troubleshooting is complete. If the PCM was substituted, replace the original PCM (see page 11-232). If any other Pending or Confirmed DTCs were indicated in step 30, go to the indicated DTC's troubleshooting. ■

    NO—If the screen indicates FAILED, check for poor connections or loose terminals at secondary HO2S (Sensor 2), the A/F sensor relay (LAF), and the PCM. If the PCM was updated, substitute a known-good PCM (see page 11-7), then recheck. If the PCM was substituted, go to step 1. If the screen indicates NOT COMPLETED, keep idling until a result comes on.

DTC P0171: Rear Bank (Bank 1) Fuel System Too Lean

DTC P0172: Rear Bank (Bank 1) Fuel System Too Rich

DTC P0174: Front Bank (Bank 2) Fuel System Too Lean

DTC P0175: Front Bank (Bank 2) Fuel System Too Rich

NOTE:
- Before you troubleshoot, record all freeze data and any on-board snapshot, and review the general troubleshooting information (see page 11-3).
- Poor fuel quality can also cause DTC P0171 and/or P0174.
- If some of the DTCs listed below are stored at the same time as DTC P0171, P0172, P0174, and/or P0175, troubleshoot those DTCs first, then recheck for P0171, P0172, P0174, and/or P0175.

P0101, P0102, P0103: Mass air flow (MAF) sensor
P0107, P0108, P1128, P1129: Manifold absolute pressure (MAP) sensor
P0133, P0153, P1172, P1174, P2195, P2197, P2237, P2238, P2240, P2241, P2243, P2245, P2247, P2249, P2251, P2252, P2254, P2255, P2A00, P2A03: Air fuel ratio (A/F) sensor (Sensor 1)
P0134, P0135, P0154, P0155: Air fuel ratio (A/F) sensor (Sensor 1) heater
P0137, P0138, P0139, P0157, P0158, P0159, P2270, P2271, P2272, P2273: Secondary HO2S (Sensor 2)
P0141, P0161: Secondary HO2S (Sensor 2) heater
P2646, P2647, P2648, P2649: VTEC system
P0401, P0404, P0406, P2413: Exhaust gas recirculation (EGR) system
P2279: Intake air leakage

1. Check the fuel pressure (see page 11-335).

   Is the fuel pressure OK?

   YES—Go to step 2.

   NO—Check these items:

   - If the pressure is too high, replace the fuel pressure regulator (see page 11-348), then go to step 2.
   - If the pressure is too low, check the fuel pump, the fuel pressure regulator, the fuel filter, and the fuel lines for restrictions, then go to step 6.

2. Start the engine. Hold the engine speed at 3,000 rpm without load (in P or N) until the radiator fan comes on, then let it idle.

3. Check under these conditions:

   - Engine coolant temperature (ECT SENSOR 1) above 158 °F (70 °C)
   - Transmission in P or N
   - All electrical loads off

4. Monitor the ENGINE SPEED in the DATA LIST with the HDS, and hold the engine speed at 2,500 rpm. Once the engine speed is met, hold the accelerator pedal steady for more than 10 seconds.

   Did the engine speed vary more than 100 rpm from 2,500 rpm?

   YES—Repeat step 4.

   NO—Go to step 5.

5. While holding the engine speed at 2,500 rpm, check the MAF SENSOR in the DATA LIST with the HDS.

   Is there about 12.8– 15.6 gm/s?

   YES—Check the engine valve clearances, and adjust them if needed (see page 6-10). If the valve clearances are OK, replace the injectors (see page 11-223), then go to step 6.

   NO—Replace the MAF sensor/IAT sensor (see page 11-225), then go to step 6.

(cont'd)

DTC Troubleshooting (cont'd)

6. Turn the ignition switch to ON (II).
7. Reset the PCM with the HDS.
8. Do the PCM idle learn procedure (see page 11-313).
9. Start the engine. Hold the engine speed at 3,000 rpm without load (in P or N) until the radiator fan comes on, then let it idle.
10. Test-drive under these conditions:
    - Engine coolant temperature (ECT SENSOR 1) above 158 °F (70 °C)
    - Transmission in D
    - Drive at a steady speed between 15—75 mph (24—120 km/h) for 15 minutes.

    NOTE: DTC P0171, P0172, P0174, and/or P0175 may take up to 80 minutes of test driving to set. Using the HDS, monitor the long term fuel trim (LT FUEL TRIM). If the LT FUEL TRIM stays within 0.8—1.21, there is no problem at this time.
11. Check for Pending or Confirmed DTCs with the HDS.

    Is DTC P0171, P0172, P0174, or P0175 indicated?

    YES—Go to step 1.

    NO—Troubleshooting is complete. If any other Pending or Confirmed DTCs are indicated, go to the indicated DTC's troubleshooting. ■

DTC P0300: Random Misfire and Any Combination of the Following:

DTC P0301: No. 1 Cylinder Misfire Detected

DTC P0302: No. 2 Cylinder Misfire Detected

DTC P0303: No. 3 Cylinder Misfire Detected

DTC P0304: No. 4 Cylinder Misfire Detected

DTC P0305: No. 5 Cylinder Misfire Detected

DTC P0306: No. 6 Cylinder Misfire Detected

Special Tools Required
- Pressure gauge adapter 07NAJ-P07010A
- A/T low pressure gauge w/panel 07406-0070301
- A/T pressure hose, 2,210 mm 07MAJ-PY4011A
- A/T pressure hose, adapter 07MAJ-PY40120
- Oil pressure hose 07ZAJ-S5AA200

NOTE:
- Before you troubleshoot, record all freeze data and any on-board snapshot, and review the general troubleshooting information (see page 11-3).
- If the misfire is frequent enough to trigger detection of increased emissions during two consecutive driving cycles, the MIL will come on, and DTC P0300 (and some combination of P0301 through P0306) will be stored.
- If the misfire is frequent enough to damage the catalyst, the MIL will blink whenever the misfire occurs, and DTC P0300 (and some combination of P0301 through P0306) will be stored. When the misfire stops, the MIL will remain on.
- Troubleshoot the following DTCs first, if any of them were stored along with the random misfire DTC(s) (Because parts can sometimes fail without setting DTCs, you should also do a physical inspection of the systems listed below.):

  P0101, P0102, P0103: Mass air flow (MAF)
  P0107, P0108, P1128, P1129: Manifold absolute pressure (MAP) sensor
  P0171, P0172, P0174, P0175: Fuel system
  P0335, P0339, P0385, P0389: Crankshaft position (CKP) sensor A/B
  P0506, P0507: Idle control system
  P0340, P0344: Camshaft position (CMP) sensor
  P2646, P2647, P2648, P2649: VTEC system
  P0401, P0404, P0406, P2413: Exhaust gas recirculation (EGR) system

1. Turn the ignition switch to ON (II).
2. Clear the DTC with the HDS.
3. Start the engine, and let it idle without load (in P or N).
4. Monitor the OBD STATUS for DTC P0301, P0302, P0303, P0304, P0305, or P0306 in the DTCs MENU with the HDS.

   Does the screen indicate FAILED?

   YES—Go to step 9.

   NO—If the screen indicates PASSED, go to step 5. If the screen indicates EXECUTING, keep idling until a result comes on. If the screen indicates OUT OF CONDITION, wait for several minutes, then recheck.
5. Check the CYL1 MISFIRE, CYL2 MISFIRE, CYL3 MISFIRE, CYL4 MISFIRE, CYL5 MISFIRE, and/or CYL6 MISFIRE in the DATA LIST for 10 minutes with the HDS.

   Does CYL1 MISFIRE, CYL2 MISFIRE, CYL3 MISFIRE, CYL4 MISFIRE, CYL5 MISFIRE, and/or CYL6 MISFIRE show misfire counts?

   YES—Go to step 9.

   NO—Go to step 6.
6. Test-drive the vehicle for several minutes in the range of these recorded freeze data parameters:

   - ENGINE SPEED
   - VSS
   - REL TP SENSOR
   - CLV (calculated load value)
   - ECT SENSOR 1
   - APP SENSOR
7. Monitor the OBD STATUS for DTC P0301, P0302, P0303, P0304, P0305, or P0306 in the DTCs MENU with the HDS.

   Does the screen indicate FAILED?

   YES—Go to step 9.

   NO—If the screen indicates PASSED, go to step 8. If the screen indicates EXECUTING, keep driving until a result comes on. If the screen indicates OUT OF CONDITION or NOT COMPLETED, go to step 6 and recheck.
8. Check the CYL1 MISFIRE, CYL2 MISFIRE, CYL3 MISFIRE, CYL4 MISFIRE, CYL5 MISFIRE, and/or CYL6 MISFIRE in the DATA LIST for 10 minutes with the HDS.

   Does CYL1 MISFIRE, CYL2 MISFIRE, CYL3 MISFIRE, CYL4 MISFIRE, CYL5 MISFIRE, and/or CYL6 MISFIRE show misfire counts?

   YES—Go to step 9.

   NO—Intermittent failure, the system is OK at this time. ■
9. Turn the ignition switch to LOCK (0).
10. Check the fuel quality.

    Is the quality good?

    YES—Go to step 11.

    NO—Drain the tank, and fill it with known-good fuel, then go to step 23.
11. Inspect the spark plugs (see page 4-24). If the spark plugs are fouled or worn, replace them.

(cont'd)

DTC Troubleshooting (cont'd)

12. Test-drive the vehicle for several minutes in the range of these recorded freeze data parameters:

    - ENGINE SPEED
    - VSS
    - REL TP SENSOR
    - CLV (calculated load value)
    - ECT SENSOR 1
    - APP SENSOR

13. Check the CYL1 MISFIRE, CYL2 MISFIRE, CYL3 MISFIRE, CYL4 MISFIRE, CYL5 MISFIRE, and/or CYL6 MISFIRE in the DATA LIST for 10 minutes with the HDS.

    Does CYL1 MISFIRE, CYL2 MISFIRE, CYL3 MISFIRE, CYL4 MISFIRE, CYL5 MISFIRE, and/or CYL6 MISFIRE show misfire counts?

    YES—Go to step 14.

    NO—Go to step 23.

14. Check the fuel pressure (see page 11-335).

    Is the fuel pressure OK?

    YES—Go to step 15.

    NO—
    - If the pressure is too high, replace the fuel pressure regulator (see page 11-348), then go to step 23.
    - If the pressure is too low, check the fuel pump, the fuel feed lines, and the fuel filter. If they are OK, replace the fuel pressure regulator (see page 11-348), then go to step 23.

15. Start the engine. Hold the engine speed at 3,000 rpm without load (in P or N) until the radiator fan comes on, then let it idle.

16. Check under these conditions:

    - Engine coolant temperature (ECT SENSOR 1) above 158 °F (70 °C)
    - Transmission in P or N
    - All electrical loads off

17. Monitor the ENGINE SPEED in the DATA LIST with the HDS, and hold the engine speed at 2,500 rpm. Once the engine speed is met, hold the accelerator pedal steady for more than 10 seconds.

    Did the engine speed vary more than 100 rpm from 2,500 rpm?

    YES—Repeat step 17.

    NO—Go to step 18.

18. While holding the engine speed at 2,500 rpm, check the MAF SENSOR in the DATA LIST with the HDS.

    Is there about 12.8– 15.6 gm/s?

    YES—Go to step 19.

    NO—Replace the MAF sensor/IAT sensor (see page 11-225), then go to step 23.

19. Remove the rocker arm oil pressure switch (A), and attach the special tools as shown, then attach the rocker arm oil pressure switch to the pressure gauge adapter (B).

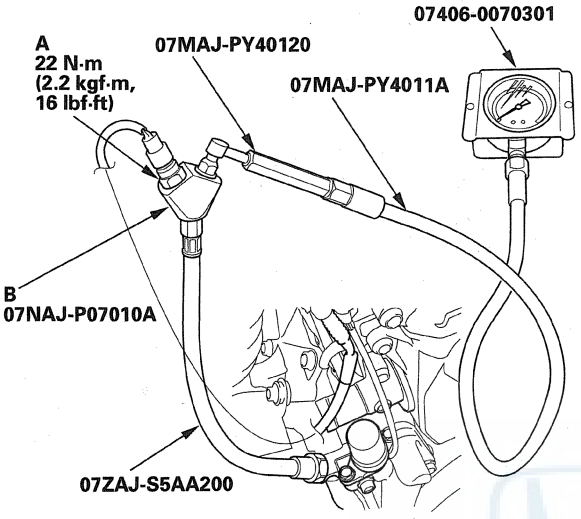

20. Reconnect the rocker arm oil pressure switch 2P connector.

21. Start the engine. Hold the engine speed at 3,000 rpm without load (in P or N) until the radiator fan comes on.

22. Check the oil pressure at engine speeds of 1,000 and 2,000 rpm. Keep the measuring time as short as possible (less than 1 minute) because the engine is running without load.

    Is the oil pressure below 49 kPa (0.5 kgf/cm², 7 psi)?

    YES—Go to step 23.

    NO—Inspect the VTEC system, then go to step 23.

23. Turn the ignition switch to ON (II).

24. Reset the PCM with the HDS.

25. Clear the CKP pattern with the HDS.

26. Do the PCM idle learn procedure (see page 11-313).

27. Do the CKP pattern learn procedure (see page 11-5).

28. Test-drive the vehicle for several minutes in the range of these recorded freeze data parameters:

    - ENGINE SPEED
    - VSS
    - REL TP SENSOR
    - CLV (calculated load value)
    - ECT SENSOR 1
    - APP SENSOR

29. Check for Pending or Confirmed DTCs with the HDS.

    Is DTC P0300 and any combination of DTC P0301, P0302, P0303, P0304, P0305, or P0306 indicated?

    YES—Check for poor connections or loose terminals at the ignition coils, the injectors, and the PCM, then go to the DTC P0301, P0302, P0303, P0304, P0305, or P0306 troubleshooting (see page 11-114).

    NO—Go to step 30.

30. Monitor the OBD STATUS for DTC P0301, P0302, P0303, P0304, P0305, or P0306 in the DTCs MENU with the HDS.

    Does the screen indicate PASSED?

    YES—Troubleshooting is complete. If any other Pending or Confirmed DTCs were indicated in step 29, go to the indicated DTC's troubleshooting. ■

    NO—If the screen indicates FAILED, check for poor connections or loose terminals at the ignition coils, the injectors, and the PCM, then go to step 1. If the screen indicates EXECUTING, keep driving until a result comes on. If the screen indicates OUT OF CONDITION, go to step 28.

DTC Troubleshooting (cont'd)

DTC P0301: No. 1 Cylinder Misfire Detected

DTC P0302: No. 2 Cylinder Misfire Detected

DTC P0303: No. 3 Cylinder Misfire Detected

DTC P0304: No. 4 Cylinder Misfire Detected

DTC P0305: No. 5 Cylinder Misfire Detected

DTC P0306: No. 6 Cylinder Misfire Detected

NOTE: Before you troubleshoot, record all freeze data and any on-board snapshot, and review the general troubleshooting information (see page 11-3).

1. Turn the ignition switch to ON (II).
2. Clear the DTC with the HDS.
3. Start the engine, and let it idle without load for 2 minutes (in P or N).
4. Monitor the OBD STATUS for DTC P0301, P0302, P0303, P0304, P0305, or P0306 in the DTCs MENU with the HDS.

   Does the screen indicate FAILED?

   YES—Go to step 9.

   NO—If the screen indicates PASSED, go to step 5. If the screen indicates EXECUTING, keep idling until a result comes on. If the screen indicates OUT OF CONDITION, wait for several minutes, and recheck.
5. Check the CYL1 MISFIRE, CYL2 MISFIRE, CYL3 MISFIRE, CYL4 MISFIRE, CYL5 MISFIRE, and/or CYL6 MISFIRE in the DATA LIST for 10 minutes with the HDS.

   Does CYL1 MISFIRE, CYL2 MISFIRE, CYL3 MISFIRE, CYL4 MISFIRE, CYL5 MISFIRE, and/or CYL6 MISFIRE show misfire counts?

   YES—Go to step 9.

   NO—Go to step 6.
6. Test-drive the vehicle for several minutes in the range of these recorded freeze data parameters:

   - ENGINE SPEED
   - VSS
   - REL TP SENSOR
   - CLV (calculated load value)
   - GEAR POSITION
   - ECT SENSOR 1
7. Monitor the OBD STATUS for DTC P0301, P0302, P0303, P0304, P0305, or P0306 in the DTCs MENU with the HDS.

   Does the screen indicate FAILED?

   YES—Go to step 9.

   NO—If the screen indicates PASSED, go to step 8. If the screen indicates EXECUTING, keep driving until a result comes on. If the screen indicates OUT OF CONDITION, go to step 6.
8. Check the CYL1 MISFIRE, CYL2 MISFIRE, CYL3 MISFIRE, CYL4 MISFIRE, CYL5 MISFIRE, and/or CYL6 MISFIRE in the DATA LIST for 10 minutes with the HDS.

   Does CYL1 MISFIRE, CYL2 MISFIRE, CYL3 MISFIRE, CYL4 MISFIRE, CYL5 MISFIRE, and/or CYL6 MISFIRE show misfire counts?

   YES—Go to step 9.

   NO—Intermittent failure, the system is OK at this time. Check the fuel and ignition system circuit connectors for loose wires or poor connections. ■
9. Turn the ignition switch to LOCK (0).
10. Exchange the ignition coil from the problem cylinder with one from another cylinder.
11. Reconnect all connectors.

12. Test-drive the vehicle for several minutes in the range of these recorded freeze data parameters:

    - ENGINE SPEED
    - VSS
    - REL TP SENSOR
    - CLV (calculated load value)
    - GEAR POSITION
    - ECT SENSOR 1

13. Check the CYL1 MISFIRE, CYL2 MISFIRE, CYL3 MISFIRE, CYL4 MISFIRE, CYL5 MISFIRE, and/or CYL6 MISFIRE in the DATA LIST for 10 minutes with the HDS.

    Does CYL1 MISFIRE, CYL2 MISFIRE, CYL3 MISFIRE, CYL4 MISFIRE, CYL5 MISFIRE, and/or CYL6 MISFIRE show misfire counts?

    YES—Go to step 14.

    NO—Intermittent failure due to poor contact at the ignition coil contactor (no misfire at this time). Make sure that the ignition coil connectors are secure. ■

14. Determine which cylinder had the misfire.

    Does the misfire occur in the cylinder where the ignition coil was moved?

    YES—Replace the faulty ignition coil (see page 4-21), then go to step 55.

    NO—Go to step 15.

15. Turn the ignition switch to LOCK (0).

16. Exchange the spark plug from the problem cylinder with the one from another cylinder.

17. Reconnect all connectors.

18. Test-drive the vehicle for several minutes in the range of these recorded freeze data parameters:

    - ENGINE SPEED
    - VSS
    - REL TP SENSOR
    - CLV (calculated load value)
    - GEAR POSITION
    - ECT SENSOR 1

19. Check the CYL1 MISFIRE, CYL2 MISFIRE, CYL3 MISFIRE, CYL4 MISFIRE, CYL5 MISFIRE, and/or CYL6 MISFIRE in the DATA LIST for 10 minutes with the HDS.

    Does CYL1 MISFIRE, CYL2 MISFIRE, CYL3 MISFIRE, CYL4 MISFIRE, CYL5 MISFIRE, and/or CYL6 MISFIRE show misfire counts?

    YES—Go to step 20.

    NO—Intermittent failure due to spark plug fouling (no misfire at this time). ■

20. Determine which cylinder had the misfire.

    Does the misfire occur in the cylinder where the spark plug was moved?

    YES—Replace the faulty spark plug, then go to step 55.

    NO—Go to step 21.

21. Turn the ignition switch to LOCK (0).

22. Disconnect the ignition coil 3P connector from the problem cylinder.

23. Turn the ignition switch to ON (II).

(cont'd)

DTC Troubleshooting (cont'd)

24. Measure the voltage between ignition coil 3P connector terminal No. 3 and body ground.

IGNITION COIL 3P CONNECTOR

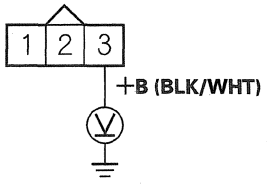

Wire side of female terminals

Is there battery voltage?

YES—Go to step 25.

NO—Repair open in the wire between the ignition coil and the ignition coil relay, then go to step 55.

25. Turn the ignition switch to LOCK (0).

26. Check for continuity between ignition coil 3P connector terminal No. 2 and body ground.

IGNITION COIL 3P CONNECTOR

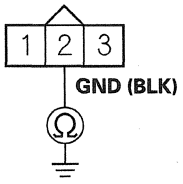

Wire side of female terminals

Is there continuity?

YES—Go to step 27.

NO—Repair open in the wire between the ignition coil and G101, then go to step 55.

27. Jump the SCS line with the HDS.

28. Disconnect PCM connector A (31P).

29. Check for continuity between body ground and the appropriate PCM connector terminal (see table).

PROBLEM CYLINDER	DTC	PCM TERMINAL	WIRE COLOR
No. 1	P0301	A20	YEL/GRN
No. 2	P0302	A19	BLU/RED
No. 3	P0303	A18	WHT/BLU
No. 4	P0304	A17	BRN
No. 5	P0305	A16	BLK/RED
No. 6	P0306	A15	BRN/WHT

PCM CONNECTOR A (31P)

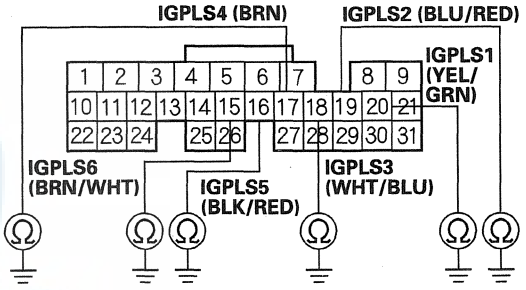

Wire side of female terminals

Is there continuity?

YES—Repair short in the wire between the PCM and the ignition coil, then go to step 55.

NO—Go to step 30.

30. Connect appropriate ignition coil 3P connector terminal No. 1 to body ground with a jumper wire (see table).

PROBLEM CYLINDER	DTC	WIRE COLOR
No. 1	P0301	YEL/GRN
No. 2	P0302	BLU/RED
No. 3	P0303	WHT/BLU
No. 4	P0304	BRN
No. 5	P0305	BLK/RED
No. 6	P0306	BRN/WHT

IGNITION COIL 3P CONNECTOR

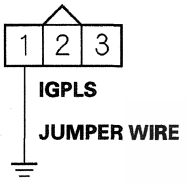

Wire side of female terminals

31. Check for continuity between body ground and the appropriate PCM connector terminal (see table).

PROBLEM CYLINDER	DTC	PCM TERMINAL	WIRE COLOR
No. 1	P0301	A20	YEL/GRN
No. 2	P0302	A19	BLU/RED
No. 3	P0303	A18	WHT/BLU
No. 4	P0304	A17	BRN
No. 5	P0305	A16	BLK/RED
No. 6	P0306	A15	BRN/WHT

PCM CONNECTOR A (31P)

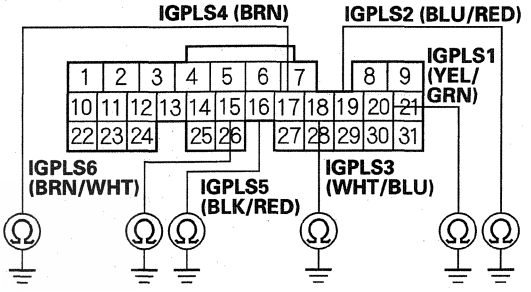

Wire side of female terminals

Is there continuity?

YES—Go to step 32.

NO—Repair open in the wire between the PCM and the ignition coil, then go to step 55.

(cont'd)

DTC Troubleshooting (cont'd)

32. Turn the ignition switch to ON (II).

33. Measure the voltage between body ground and the appropriate PCM connector terminal (see table).

PROBLEM CYLINDER	DTC	PCM TERMINAL	WIRE COLOR
No. 1	P0301	A21	BRN
No. 2	P0302	A31	RED
No. 3	P0303	A30	BLU
No. 4	P0304	A29	YEL
No. 5	P0305	A28	BLK/RED
No. 6	P0306	A27	WHT/BLU

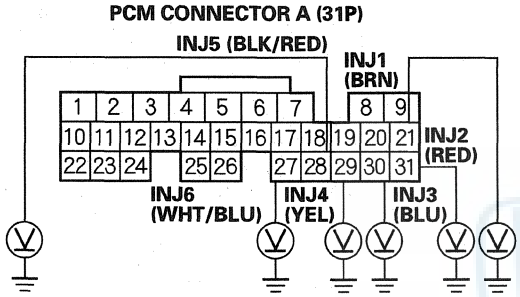

Wire side of female terminals

Is there battery voltage?

YES—Go to step 43.

NO—Go to step 34.

34. Turn the ignition switch to LOCK (0).

35. Remove the intake manifold (see page 9-3).

36. Disconnect the injector 2P connector from the problem cylinder.

37. Turn the ignition switch to ON (II).

38. Measure the voltage between injector 2P connector terminal No. 1 and body ground.

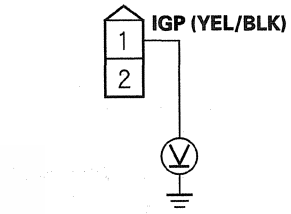

Wire side of female terminals

Is there battery voltage?

YES—Go to step 39.

NO—Repair open in the wire between the injector and PGM-FI main relay 1 (FI MAIN), then go to step 55.

39. Turn the ignition switch to LOCK (0).

40. Check for continuity between body ground and the appropriate PCM connector terminal (see table).

PROBLEM CYLINDER	DTC	PCM TERMINAL	WIRE COLOR
No. 1	P0301	A21	BRN
No. 2	P0302	A31	RED
No. 3	P0303	A30	BLU
No. 4	P0304	A29	YEL
No. 5	P0305	A28	BLK/RED
No. 6	P0306	A27	WHT/BLU

PCM CONNECTOR A (31P)

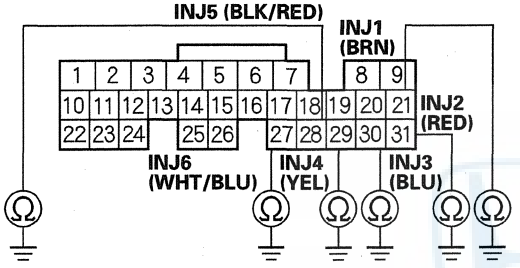

Wire side of female terminals

Is there continuity?

YES—Repair short in the wire between the PCM and the injector, then go to step 55.

NO—Go to step 41.

41. Connect appropriate injector 2P connector terminal No. 2 to body ground with a jumper wire (see table).

PROBLEM CYLINDER	DTC	WIRE COLOR
No. 1	P0301	BRN
No. 2	P0302	RED
No. 3	P0303	BLU
No. 4	P0304	YEL
No. 5	P0305	BLK/RED
No. 6	P0306	WHT/BLU

INJECTOR 2P CONNECTOR

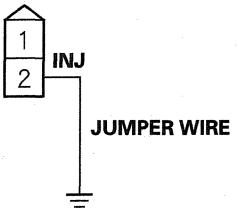

Wire side of female terminals

(cont'd)

DTC Troubleshooting (cont'd)

42. Check for continuity between body ground and the appropriate PCM connector terminal (see table).

PROBLEM CYLINDER	DTC	PCM TERMINAL	WIRE COLOR
No. 1	P0301	A21	BRN
No. 2	P0302	A31	RED
No. 3	P0303	A30	BLU
No. 4	P0304	A29	YEL
No. 5	P0305	A28	BLK/RED
No. 6	P0306	A27	WHT/BLU

PCM CONNECTOR A (31P)

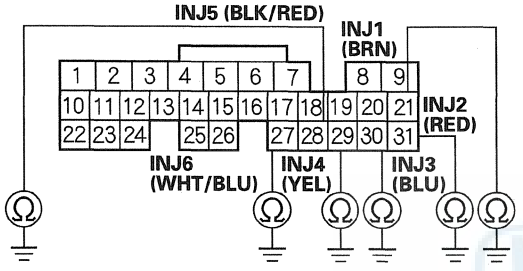

Wire side of female terminals

Is there continuity?

YES—Go to step 43.

NO—Repair open in the wire between the PCM and the injector, then go to step 55.

43. Measure the resistance between injector 2P connector terminals No. 1 and No. 2.

INJECTOR 2P CONNECTOR

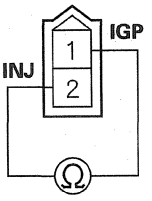

Terminal side of male terminals

Is there 10— 13 Ω ?

YES—Go to step 44.

NO—Replace the injector (see page 11-223), then go to step 55.

44. Exchange the injector from the problem cylinder with the one from another cylinder. Also check the injector fuel inlet screen for debris, and clean it if needed.

45. Reconnect all connectors, and install the intake manifold (see page 9-4).

46. Turn the ignition switch to ON (II).

47. Clear the DTCs with the HDS.

48. Start the engine, and let it idle without load (in Park or neutral) for 2 minutes.

49. Test-drive the vehicle for several minutes in the range of these recorded freeze data parameters:

    - ENGINE SPEED
    - VSS
    - REL TP SENSOR
    - CLV (calculated load value)
    - GEAR POSITION
    - ECT SENSOR 1

50. Check the CYL1 MISFIRE, CYL2 MISFIRE, CYL3 MISFIRE, CYL4 MISFIRE, CYL5 MISFIRE, and/or CYL6 MISFIRE in the DATA LIST for 10 minutes with the HDS.

    Does CYL1 MISFIRE, CYL2 MISFIRE, CYL3 MISFIRE, CYL4 MISFIRE, CYL5 MISFIRE, and/or CYL6 MISFIRE show misfire counts?

    YES—Go to step 51.

    NO—Intermittent failure due to poor contact in the injector connector (no misfire at this time). Check for poor connections or loose terminals at the injector. ■

51. Determine which cylinder had the misfire.

    Does the misfire occur in the cylinder where the injector was moved?

    YES—Replace the faulty injector (see page 11-223), then go to step 55.

    NO—Go to step 52.

52. Turn the ignition switch to LOCK (0).

53. Do an engine compression and a cylinder leakdown test (see page 6-7).

    Did the engine pass both tests?

    YES—Go to step 54.

    NO—Repair the engine, then go to step 55.

54. Do the VTEC rocker arm test (see page 6-8).

    Did the engine pass the test?

    YES—Go to step 63.

    NO—Repair the VTEC rocker arm, then go to step 55.

55. Reconnect all connectors.

56. Reset the PCM with the HDS.

57. Clear the CKP pattern with the HDS.

58. Do the PCM idle learn procedure (see page 11-313).

59. Do the CKP pattern learn procedure (see page 11-5).

60. Test-drive the vehicle for several minutes in the range of these recorded freeze data parameters:

    - ENGINE SPEED
    - VSS
    - REL TP SENSOR
    - CLV (calculated load value)
    - GEAR POSITION
    - ECT SENSOR 1

61. Check for Pending or Confirmed DTCs with the HDS.

    Is DTC P0301, P0302, P0303, P0304, P0305, or P0306 indicated?

    YES—Check for poor connections or loose terminals at the ignition coil, the injector, and the PCM, then go to step 1.

    NO—Go to step 62.

(cont'd)

DTC Troubleshooting (cont'd)

62. Monitor the OBD STATUS for DTC P0301, P0302, P0303, P0304, P0305, or P0306 in the DTCs MENU with the HDS.

    Does the screen indicate PASSED?

    YES—Troubleshooting is complete. If any other Pending or Confirmed DTCs were indicated in step 61, go to the indicated DTC's troubleshooting. ■

    NO—If the screen indicates FAILED, check for poor connections or loose terminals at the ignition coil, the injector, and the PCM, then go to step 1. If the screen indicates EXECUTING, keep driving until a result comes on. If the screen indicates OUT OF CONDITION, go to step 60.

63. Reconnect all connectors.

64. Update the PCM if it does not have the latest software (see page 11-230), or substitute a known-good PCM (see page 11-7).

65. Test-drive the vehicle for several minutes in the range of these recorded freeze data parameters:

    - ENGINE SPEED
    - VSS
    - REL TP SENSOR
    - CLV (calculated load value)
    - GEAR POSITION
    - ECT SENSOR 1

66. Check for Pending or Confirmed DTCs with the HDS.

    Is DTC P0301, P0302, P0303, P0304, P0305, or P0306 indicated?

    YES—Check for poor connections or loose terminals at the ignition coil, the injector, and the PCM. If the PCM was updated, substitute a known-good PCM (see page 11-7), then go to step 65. If the PCM was substituted, go to step 1.

    NO—Go to step 67.

67. Monitor the OBD STATUS for DTC P0301, P0302, P0303, P0304, P0305, or P0306 in the DTCs MENU with the HDS.

    Does the screen indicate PASSED?

    YES—If the PCM was updated, troubleshooting is complete. If the PCM was substituted, replace the original PCM (see page 11-232). If any other Pending or Confirmed DTCs were indicated in step 66, go to the indicated DTC's troubleshooting. ■

    NO—If the screen indicates FAILED, check for poor connections or loose terminals at the ignition coil, the injector, and the PCM. If the PCM was updated, substitute a known-good PCM (see page 11-7), then go to step 65. If the PCM was substituted, go to step 1. If the screen indicates EXECUTING, keep driving until a result comes on. If the screen indicates OUT OF CONDITION, go to step 65.

DTC P0325: Knock Sensor Circuit Malfunction

NOTE: Before you troubleshoot, record all freeze data and any on-board snapshot, and review the general troubleshooting information (see page 11-3).

1. Turn the ignition switch to ON (II).
2. Clear the DTC with the HDS.
3. Start the engine. Hold the engine speed at 3,000 rpm without load (in P or N) until the radiator fan comes on, then let it idle.
4. Hold the engine speed at 3,000—4,000 rpm for at least 10 seconds.
5. Check for Pending or Confirmed DTCs with the HDS.

   Is DTC P0325 indicated?

   YES—Go to step 6.

   NO—Intermittent failure, the system is OK at this time. Check for poor connections or loose terminals at the knock sensor and the PCM. ■
6. Turn the ignition switch to LOCK (0).
7. Jump the SCS line with the HDS.
8. Disconnect the knock sensor subharness 1P connector.
9. Disconnect PCM connector B (24P).
10. Check for continuity between PCM connector terminal B6 and body ground.

PCM CONNECTOR B (24P)

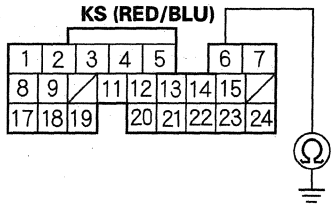

Wire side of female terminals

Is there continuity?

YES—Repair short in the wire between the PCM (B6) and the knock sensor subharness, then go to step 19.

NO—Go to step 11.

11. Connect the knock sensor subharness 1P connector terminal to body ground with a jumper wire.

KNOCK SENSOR SUBHARNESS 1P CONNECTOR

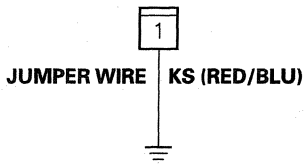

Wire side of female terminals

(cont'd)

DTC Troubleshooting (cont'd)

12. Check for continuity between PCM connector terminal B6 and body ground.

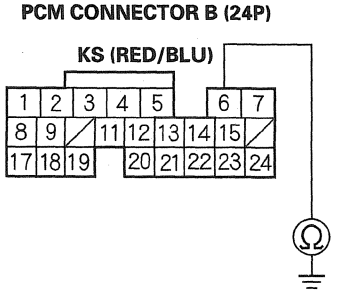

Wire side of female terminals

Is there continuity?

YES—Go to step 13.

NO—Repair open in the wire between the PCM (B6) and the knock sensor subharness, then go to step 19.

13. Remove the intake manifold (see page 9-3) and the injector base (see page 9-6).

14. Disconnect the knock sensor 1P connector.

15. Check for continuity between the knock sensor subharness 1P connector terminal and body ground.

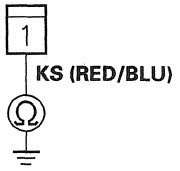

Wire side of female terminals

Is there continuity?

YES—Repair short in the knock sensor subharness, then go to step 18.

NO—Go to step 16.

16. Check for an open in the knock sensor subharness.

Is the harness OK?

YES—Go to step 17.

NO—Repair open in the knock sensor subharness, then go to step 19.

17. Replace the knock sensor (see page 11-230).

18. Install the injector base (see page 9-6) and the intake manifold (see page 9-4).

19. Reconnect all connectors.

20. Turn the ignition switch to ON (II).

21. Reset the PCM with the HDS.

22. Do the PCM idle learn procedure (see page 11-313).

23. Hold the engine speed at 3,000–4,000 rpm for at least 10 seconds.

24. Check for Pending or Confirmed DTCs with the HDS.

Is DTC P0325 indicated?

YES—Check for poor connections or loose terminals at the knock sensor and the PCM, go to step 26.

NO—Go to step 25.

25. Monitor the OBD STATUS for DTC P0325 in the DTCs MENU with the HDS.

Does the screen indicate PASSED?

YES—Troubleshooting is complete. If any other Pending or Confirmed DTCs were indicated in step 24, go to the indicated DTC's troubleshooting. ■

NO—If the screen indicates FAILED, check for poor connections or loose terminals at the knock sensor and the PCM, then go to step 1. If the screen indicates NOT COMPLETED, go to step 23.

26. Update the PCM if it does not have the latest software (see page 11-230), or substitute a known-good PCM (see page 11-7).

27. Start the engine. Hold the engine speed at 3,000 rpm without load (in P or N) until the radiator fan comes on, then let it idle.

28. Hold the engine speed at 3,000—4,000 rpm for at least 10 seconds.

29. Check for Pending or Confirmed DTCs with the HDS.

    Is DTC P0325 indicated?

    YES—Check for poor connections or loose terminals at the ignition coil, the injector, and the PCM. If the PCM was updated, substitute a known-good PCM (see page 11-7), then go to step 28. If the PCM was substituted, go to step 1.

    NO—Go to step 30.

30. Monitor the OBD STATUS for DTC P0325 in the DTCs MENU with the HDS.

    Does the screen indicate PASSED?

    YES—If the PCM was updated, troubleshooting is complete. If the PCM was substituted, replace the original PCM (see page 11-232). If any other Pending or Confirmed DTCs were indicated in step 29, go to the indicated DTC's troubleshooting.■

    NO—If the screen indicates FAILED, check for poor connections or loose terminals at the ignition coil, the injector, and the PCM. If the PCM was updated, substitute a known-good PCM (see page 11-7), then go to step 28. If the PCM was substituted, go to step 1. If the screen indicates NOT COMPLETED, go to step 28.

DTC P0335: CKP Sensor A No Signal

DTC P0385: CKP Sensor B No Signal

NOTE:
- Before you troubleshoot, record all freeze data and any on-board snapshot, and review the general troubleshooting information (see page 11-3).
- Information marked with an asterisk (*) applies to CKP sensor B.

1. Turn the ignition switch to ON (II).

2. Clear the DTC with the HDS.

3. Start the engine.

4. Check for Pending or Confirmed DTCs with the HDS.

   Is DTC P0335 and/or P0385 indicated?

   YES—Go to step 5.

   NO—Intermittent failure, the system is OK at this time. Check for poor connections or loose terminals at CKP sensor A/B and the PCM.■

5. Turn the ignition switch to LOCK (0).

6. Disconnect CKP sensor A/B 6P connector (see page 11-229).

7. Turn the ignition switch to ON (II).

8. Measure the voltage between CKP sensor A/B 6P connector terminal No. 6 (No. 3)* and body ground.

CKP SENSOR A/B 6P CONNECTOR

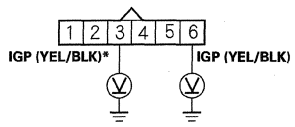

Wire side of female terminals

Is there battery voltage?

YES—Go to step 9.

NO—Repair open in the wire between CKP sensor A/B and PGM-FI main relay 1 (FI MAIN), then go to step 18.

(cont'd)

DTC Troubleshooting (cont'd)

9. Measure the voltage between CKP sensor A/B 6P connector terminal No. 5 (No. 2)* and body ground.

CKP SENSOR A/B 6P CONNECTOR

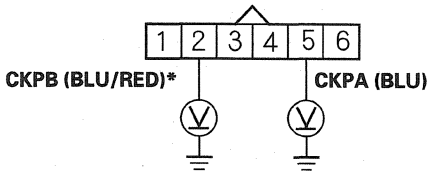

Wire side of female terminals

Is there about 5 V?

YES—Go to step 10.

NO—Go to step 11.

10. Measure the voltage between CKP sensor A/B 6P connector terminals No. 4 (No. 1)* and No. 6 (No. 3)*.

CKP SENSOR A/B 6P CONNECTOR

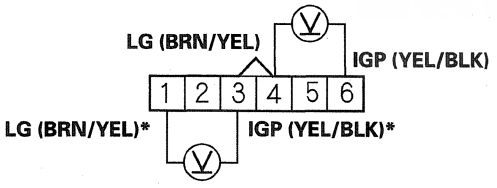

Wire side of female terminals

Is there battery voltage?

YES—Go to step 16.

NO—Repair open in the wire between CKP sensor A/B and G101, then go to step 18.

11. Measure the voltage between PCM connector terminal B17 (B1)* and body ground.

PCM CONNECTOR B (24P)

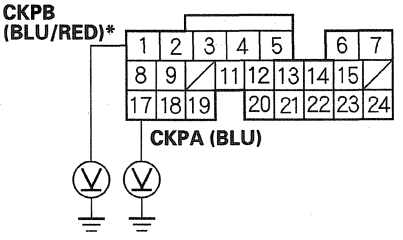

Wire side of female terminals

Is there about 5 V?

YES—Repair open in the wire between the PCM (B17 (B1)*) and CKP sensor A/B, then go to step 18.

NO—Go to step 12.

12. Turn the ignition switch to LOCK (0).

13. Jump the SCS line with the HDS.

14. Disconnect PCM connector B (24P).

15. Check for continuity between PCM connector terminal B17 (B1)* and body ground.

PCM CONNECTOR B (24P)

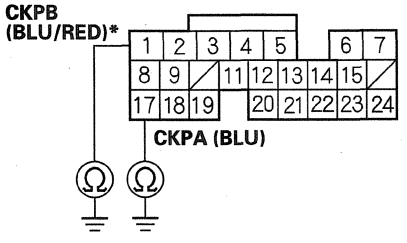

Wire side of female terminals

Is there continuity?

YES—Repair short in the wire between the PCM (B17 (B1)*) and CKP sensor A/B, then go to step 18.

NO—Go to step 25.

16. Turn the ignition switch to LOCK (0).

17. Replace CKP sensor A/B (see page 11-229).

18. Reconnect all connectors.

19. Turn the ignition switch to ON (II).

20. Reset the PCM with the HDS.

21. Clear the CKP pattern with the HDS.

22. Do the PCM idle learn procedure (see page 11-313).

23. Do the CKP pattern learn procedure (see page 11-5).

24. Check for Pending or Confirmed DTCs with the HDS.

    Is DTC P0335 and/or P0385 indicated?*

    YES—Check for poor connections or loose terminals at CKP sensor A/B and the PCM, then go to step 1.

    NO—Troubleshooting is complete. If any other Pending or Confirmed DTCs are indicated, go to the indicated DTC's troubleshooting. ■

25. Reconnect all connectors.

26. Update the PCM if it does not have the latest software (see page 11-230), or substitute a known-good PCM (see page 11-7).

27. Check for Pending or Confirmed DTCs with the HDS.

    Is DTC P0335 and/or P0385 indicated?*

    YES—Check for poor connections or loose terminals at CKP sensor A/B and the PCM. If the PCM was updated, substitute a known-good PCM (see page 11-7), then recheck. If the PCM was substituted, go to step 1.

    NO—If the PCM was updated, troubleshooting is complete. If the PCM was substituted, replace the original PCM (see page 11-232). If any other Pending or Confirmed DTCs are indicated, go to the indicated DTC's troubleshooting. ■

DTC P0339: CKP Sensor A Circuit Intermittent Interruption

DTC P0389: CKP Sensor B Circuit Intermittent Interruption

NOTE:
- Before you troubleshoot, record all freeze data and any on-board snapshot, and review the general troubleshooting information (see page 11-3).
- Information marked with an asterisk (*) applies to CKP sensor B.

1. Turn the ignition switch to ON (II).

2. Clear the DTC with the HDS.

3. Test-drive the vehicle for several minutes in the range of these recorded freeze data parameters:

   - ENGINE SPEED
   - VSS

4. Check for Pending or Confirmed DTCs with the HDS.

   Is DTC P0339 and/or P0389 indicated?*

   YES—Go to step 5.

   NO—Intermittent failure, the system is OK at this time. Check for poor connections or loose terminals at CKP sensor A/B and the PCM. ■

5. Check for poor connections or loose terminals at these locations:

   - CKP sensor A/B
   - PCM
   - Engine ground
   - Body ground

   Are the connections OK?

   YES—Go to step 6.

   NO—Reconnect or repair the connectors or terminals, then go to step 9.

(cont'd)

DTC Troubleshooting (cont'd)

6. Check for damage to the CKP sensor A/B pulse plate on the timing belt drive pulley (see page 6-28).

   Is there damage?

   YES—Replace CKP sensor A/B pulse plate/timing belt drive pulley (see page 6-28), then go to step 9.

   NO—Go to step 7.

7. Turn the ignition switch to LOCK (0).
8. Replace the CKP sensor (see page 11-229).
9. Turn the ignition switch to ON (II).
10. Reset the PCM with the HDS.
11. Clear the CKP pattern with the HDS.
12. Do the PCM idle learn procedure (see page 11-313).
13. Do the CKP pattern learn procedure (see page 11-5).
14. Start the engine, and let it idle 10 seconds.
15. Check for Pending or Confirmed DTCs with the HDS.

    Is DTC P0339 and/or P0389 indicated?*

    YES—Check for poor connections or loose terminals at CKP sensor A/B and the PCM, then go to step 1.

    NO—Troubleshooting is complete. If any other Pending or Confirmed DTCs are indicated, go to the indicated DTC's troubleshooting. ■

DTC P0340: CMP Sensor No Signal

NOTE: Before you troubleshoot, record all freeze data and any on-board snapshot, and review the general troubleshooting information (see page 11-3).

1. Turn the ignition switch to ON (II).
2. Clear the DTC with the HDS.
3. Start the engine.
4. Check for Pending or Confirmed DTCs with the HDS.

   Is DTC P0340 indicated?

   YES—Go to step 5.

   NO—Intermittent failure, the system is OK at this time. Check for poor connections or loose terminals at the CMP sensor and the PCM. ■

5. Turn the ignition switch to LOCK (0).
6. Disconnect the CMP sensor 3P connector.
7. Turn the ignition switch to ON (II).
8. Measure the voltage between CMP sensor 3P connector terminal No. 3 and body ground.

CMP SENSOR 3P CONNECTOR

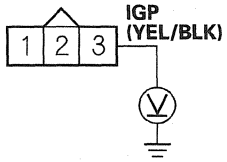

Wire side of female terminals

Is there battery voltage?

YES—Go to step 9.

NO—Repair open in the wire between the CMP sensor and PGM-FI main relay 1 (FI MAIN), then go to step 18.

9. Measure the voltage between CMP sensor 3P connector terminal No. 1 and body ground.

CMP SENSOR 3P CONNECTOR

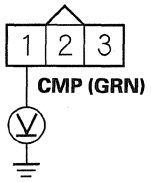

Wire side of female terminals

Is there about 5 V?

YES—Go to step 10.

NO—Go to step 11.

10. Measure the voltage between CMP sensor 3P connector terminals No. 2 and No. 3.

CMP SENSOR 3P CONNECTOR

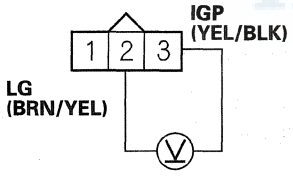

Wire side of female terminals

Is there battery voltage?

YES—Go to step 16.

NO—Repair open in the wire between the CMP sensor and G101, then go to step 18.

11. Measure the voltage between PCM connector terminal B8 and body ground.

PCM CONNECTOR B (24P)

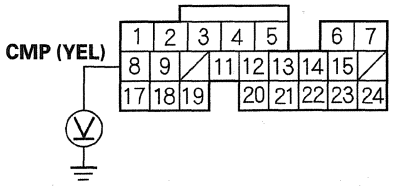

Wire side of female terminals

Is there about 5 V?

YES—Repair open in the wire between the PCM (B8) and the CMP sensor, then go to step 18.

NO—Go to step 12.

12. Turn the ignition switch to LOCK (0).

13. Jump the SCS line with the HDS.

14. Disconnect PCM connector B (24P).

15. Check for continuity between PCM connector terminal B8 and body ground.

PCM CONNECTOR B (24P)

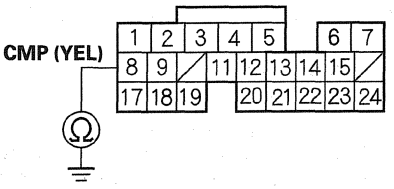

Wire side of female terminals

Is there continuity?

YES—Repair short in the wire between the PCM (B8) and the CMP sensor, then go to step 18.

NO—Go to step 26.

(cont'd)

DTC Troubleshooting (cont'd)

16. Turn the ignition switch to LOCK (0).
17. Replace the CMP sensor (see page 11-229).
18. Reconnect all connectors.
19. Turn the ignition switch to ON (II).
20. Reset the PCM with the HDS.
21. Clear the CKP pattern with the HDS.
22. Do the PCM idle learn procedure (see page 11-313).
23. Do the CKP pattern learn procedure (see page 11-5).
24. Start the engine.
25. Check for Pending or Confirmed DTCs with the HDS.

    Is DTC P0340 indicated?

    YES—Check for poor connections or loose terminals at the CMP sensor and the PCM, then go to step 1.

    NO—Troubleshooting is complete. If any other Pending or Confirmed DTCs are indicated, go to the indicated DTC's troubleshooting. ■
26. Reconnect all connectors.
27. Update the PCM if it does not have the latest software (see page 11-230), or substitute a known-good PCM (see page 11-7).
28. Check for Pending or Confirmed DTCs with the HDS.

    Is DTC P0340 indicated?

    YES—Check for poor connections or loose terminals at the CMP sensor and the PCM. If the PCM was updated, substitute a known-good PCM (see page 11-7), then recheck. If the PCM was substituted, go to step 1.

    NO—If the PCM was updated, troubleshooting is complete. If the PCM was substituted, replace the original PCM (see page 11-232). If any other Pending or Confirmed DTCs are indicated, go to the indicated DTC's troubleshooting. ■

DTC P0344: CMP Sensor Circuit Intermittent Interruption

NOTE: Before you troubleshoot, record all freeze data and any on-board snapshot, and review the general troubleshooting information (see page 11-3).

1. Turn the ignition switch to ON (II).
2. Clear the DTC with the HDS.
3. Test-drive the vehicle for 10 minutes in the range of these recorded freeze data parameters:

   - ENGINE SPEED
   - VSS
4. Check for Pending or Confirmed DTCs with the HDS.

   Is DTC P0344 indicated?

   YES—Go to step 5.

   NO—Intermittent failure, the system is OK at this time. Check for poor connections or loose terminals at the CMP sensor and the PCM. ■
5. Check for poor connections or loose terminals at these locations:

   - CMP sensor
   - PCM
   - Engine ground
   - Body ground

   Are the connections OK?

   YES—Go to step 6.

   NO—Reconnect or repair the connectors or terminals, then go to step 9.

6. Check for damage to the CMP sensor pulse projection on the front camshaft pulley (see page 11-229).

   Is there damage?

   YES—Replace the front camshaft pulley (see page 6-34), then go to step 9.

   NO—Go to step 7.

7. Turn the ignition switch to LOCK (0).

8. Replace the CMP sensor (see page 11-229).

9. Turn the ignition switch to ON (II).

10. Reset the PCM with the HDS.

11. Clear the CKP pattern with the HDS.

12. Do the PCM idle learn procedure (see page 11-313).

13. Do the CKP pattern learn procedure (see page 11-5).

14. Test-drive the vehicle for 10 minutes in the range of these recorded freeze data parameters:

    • ENGINE SPEED
    • VSS

15. Check for Pending or Confirmed DTCs with the HDS.

    Is DTC P0344 indicated?

    YES—Check for poor connections or loose terminals at the CMP sensor and the PCM, then go to step 1.

    NO—Troubleshooting is complete. If any other Pending or Confirmed DTCs are indicated, go to the indicated DTC's troubleshooting. ■

DTC P050A: Cold Start Idle Air Control System Performance Problem

NOTE: Before you troubleshoot, record all freeze data and any on-board snapshot, and review the general troubleshooting information (see page 11-3).

1. Turn the ignition switch to ON (II).

2. Check for Pending or Confirmed DTCs with the HDS.

   Are any Pending or Confirmed DTCs other than P050A indicated?

   YES—Go to the indicated DTC's troubleshooting. ■

   NO—Go to step 3.

3. Check for poor connections or blockage at the intake air duct.

   Is it OK?

   YES—Go to step 4.

   NO—Reconnect or repair the intake air duct, then go to step 19.

4. Check for damage at the air cleaner housing.

   Is it OK?

   YES—Go to step 5.

   NO—Replace the air cleaner housing (see page 11-366), then go to step 19.

5. Check for dirt or debris in the air cleaner element.

   Is it dirty?

   YES—Replace the air cleaner element or remove the debris (see page 11-367), then go to step 19.

   NO—Go to step 6.

(cont'd)

DTC Troubleshooting (cont'd)

6. Let the engine cool until the value of ECT SENSOR 1 is 122 °F (50 °C) or less.
7. Clear the DTC with the HDS.
8. Start the engine, and let it idle for 10 seconds or more.
9. Monitor the OBD STATUS for DTC P050A in the DTCs MENU with the HDS.

   Does the screen indicate FAILED?

   YES—Go to step 10.

   NO—If the screen indicates PASSED, intermittent failure, the system is OK at this time. If the screen indicates EXECUTING, keep idling until a result comes on. If the screen indicates OUT OF CONDITION or NOT COMPLETED, go to step 6.

10. Do the ETCS TEST in the INSPECTION MENU with the HDS.

    Is the THROTTLE ACTUATOR CONTROL VALVE normal?

    YES—Go to step 11.

    NO—Replace the throttle body (see page 11-369), then go to step 19.

11. Start the engine. Hold the engine speed at 3,000 rpm without load (in P or N) until the radiator fan comes on, then let it idle.
12. While holding the engine speed at 2,500 rpm for 30 seconds, check the MAF SENSOR in the DATA LIST with the HDS.

    Is there about 12.8– 15.6 gm/s?

    YES—Go to step 13.

    NO—Replace the MAF sensor/IAT sensor (see page 11-225), then go to step 19.

13. Turn the ignition switch to LOCK (0).
14. Allow the engine to cool to the ambient temperature.
15. Note the ambient temperature.
16. Turn the ignition switch to ON (II).
17. Note the value of the IAT SENSOR quickly in the DATA LIST with the HDS.
18. Compare the value of the IAT SENSOR and the ambient temperature.

    Does the value of the IAT SENSOR differ 5.4 °F (3 °C) or more from the ambient temperature?

    YES—Replace the MAF sensor/IAT sensor (see page 11-225), then go to step 19.

    NO—Check for dirt, carbon, or damage in the throttle bore. If there is dirt or carbon, clean the throttle body (see page 11-366), then go to step 19. If there is damage to the throttle bore, replace the throttle body (see page 11-369), then go to step 19.

19. Turn the ignition switch to ON (II).

20. Reset the PCM with the HDS.

21. Do the PCM idle learn procedure (see page 11-313).

22. Let the engine cool until the value of ECT SENSOR 1 is 122 °F (50 °C) or less.

23. Start the engine, and let it idle for 10 seconds or more.

24. Check for Pending or Confirmed DTCs with the HDS.

    Is DTC P050A indicated?

    YES—Check for poor connections or loose terminals at the throttle body, the MAF sensor/IAT sensor, and the PCM, then go to step 1.

    NO—Go to step 25.

25. Monitor the OBD STATUS for DTC P050A in the DTCs MENU with the HDS.

    Does the screen indicate PASSED?

    YES—Troubleshooting is complete. If any other Pending or Confirmed DTCs were indicated in step 24, go to the indicated DTC's troubleshooting. ■

    NO—If the screen indicates FAILED, check for poor connections or loose terminals at the throttle body, the MAF sensor/IAT sensor, and the PCM, then go to step 1. If the screen indicates EXECUTING, keep idling until a result comes on. If the screen indicates OUT OF CONDITION or NOT COMPLETED, go to step 22.

DTC P050B: Cold Start Ignition Timing Control System Performance Problem

NOTE: Before you troubleshoot, record all freeze data and any on-board snapshot, and review the general troubleshooting information (see page 11-3).

1. Turn the ignition switch to ON (II).

2. Check for Pending or Confirmed DTCs with the HDS.

   Are any Pending or Confirmed DTCs other than P050B indicated?

   YES—Go to the indicated DTC's troubleshooting. ■

   NO—Go to step 3.

3. Check for poor connections or blockage at the intake air duct.

   Is it OK?

   YES—Go to step 4.

   NO—Reconnect or repair the intake air duct, then go to step 25.

4. Check for damage at the air cleaner housing.

   Is it OK?

   YES—Go to step 5.

   NO—Replace the air cleaner housing (see page 11-366), then go to step 25.

5. Check for dirt or debris in the air cleaner element.

   Is it dirty?

   YES—Replace the air cleaner element or remove the debris (see page 11-367), then go to step 25.

   NO—Go to step 6.

(cont'd)

DTC Troubleshooting (cont'd)

6. Let the engine cool until the value of ECT SENSOR 1 is 122 °F (50 °C) or less.

7. Clear the DTC with the HDS.

8. Start the engine, and let it idle for 10 seconds or more.

9. Monitor the OBD STATUS for DTC P050B in the DTCs MENU with the HDS.

   Does the screen indicate FAILED?

   YES—Go to step 10.

   NO—If the screen indicates PASSED, intermittent failure, the system is OK at this time. If the screen indicates EXECUTING, keep idling until a result comes on. If the screen indicates OUT OF CONDITION or NOT COMPLETED, go to step 6.

10. Inspect the ignition timing (see page 4-20).

    Is the ignition timing OK?

    YES—Go to step 12.

    NO—Go to step 11.

11. Check for damage at the CKP sensor (see page 11-229) and the CKP sensor pulser plate (see page 6-28).

    Is the CKP sensor and/or the CKP sensor pulser plate damaged?

    YES—Replace the CKP sensor (see page 11-229) and/or the CKP sensor pulser plate (see page 6-28), then go to step 6.

    NO—Go to step 31.

12. Do the ETCS TEST in the INSPECTION MENU with the HDS.

    Is the THROTTLE ACTUATOR CONTROL VALVE normal?

    YES—Go to step 13.

    NO—Replace the throttle body (see page 11-369), then go to step 25.

13. Start the engine. Hold the engine speed at 3,000 rpm without load (in P or N) until the radiator fan comes on, then let it idle.

14. Monitor the ENGINE SPEED in the DATA LIST with the HDS, and hold the engine speed at 2,500 rpm for at least 30 seconds.

15. While holding the engine speed at 2,500 rpm, check the MAF SENSOR in the DATA LIST with the HDS.

    Is there about 12.8– 15.6 gm/s?

    YES—Go to step 16.

    NO—Replace the MAF sensor/IAT sensor (see page 11-225), then go to step 25.

16. Turn the ignition switch to LOCK (0).

17. Drain the coolant (see page 10-6).

18. Remove ECT sensor 1 (see page 11-226), and ECT sensor 2 (see page 11-226).

19. Allow the sensors to cool to the ambient temperature.

20. Note the ambient temperature.

21. Connect ECT sensor 1 and ECT sensor 2 to their 2P connectors, but do not install them.

22. Turn the ignition switch to ON (II).

23. Note the value of ECT SENSOR 1 and ECT SENSOR 2 quickly in the DATA LIST with the HDS.

24. Compare the value of ECT SENSOR 1 and the ambient temperature, and the value of ECT SENSOR 2 and the ambient temperature individually.

    Does either sensor differ more than 5.4 °F (3 °C) from the ambient temperature?

    YES—Replace the sensor that differed more than 5.4 °F (3 °C) from the ambient temperature, then go to step 25.

    NO—Check and repair any problems with the following items. Repair or replace them if it is necessary, then go to step 25. If it is OK, go to step 32.

    - Engine compression and cylinder leakdown
    - VTEC system
    - Engine oil
    - A/C system
    - Power steering

25. Turn the ignition switch to ON (II).

26. Reset the PCM with the HDS.

27. Do the PCM idle learn procedure (see page 11-313).

28. Let the engine cool until the value of ECT SENSOR 1 is 122 °F (50 °C) or less.

29. Start the engine, and let it idle for 10 seconds or more.

30. Check for Pending or Confirmed DTCs with the HDS.

    Is DTC P050B indicated?

    YES—Check for poor connections or loose terminals at the CKP sensor, the throttle body, the MAF sensor/IAT sensor, ECT sensor 1, ECT sensor 2, and the PCM, then go to step 1.

    NO—Go to step 31.

31. Monitor the OBD STATUS for DTC P050B in the DTCs MENU with the HDS.

    Does the screen indicate PASSED?

    YES—Troubleshooting is complete. If any other Pending or Confirmed DTCs were indicated in step 30, go to the indicated DTC's troubleshooting. ■

    NO—If the screen indicates FAILED, check for poor connections or loose terminals at the CKP sensor, the throttle body, the MAF sensor/IAT sensor, ECT sensor 1, ECT sensor 2, and the PCM, then go to step 1. If the screen indicates EXECUTING, keep idling until a result comes on. If the screen indicates OUT OF CONDITION or NOT COMPLETED, go to step 28.

32. Update the PCM if it does not have the latest software (see page 11-230), or substitute a known-good PCM (see page 11-7).

33. Do the PCM idle learn procedure (see page 11-313).

34. Let the engine cool until the value of ECT SENSOR 1 is 122 °F (50 °C) or less.

35. Start the engine, and let it idle for 10 seconds or more.

36. Check for Pending or Confirmed DTCs with the HDS.

    Is DTC P050B indicated?

    YES—Check for poor connections or loose terminals at the CKP sensor, the throttle body, the MAF sensor/IAT sensor, ECT sensor 1, ECT sensor 2, and the PCM. If the PCM was updated, substitute a known-good PCM (see page 11-7), then go to step 34. If the PCM was substituted, go to step 1.

    NO—Go to step 37.

(cont'd)

DTC Troubleshooting (cont'd)

37. Monitor the OBD STATUS for DTC P050B in the DTCs MENU with the HDS.

    Does the screen indicate PASSED?

    YES—If the PCM was updated, troubleshooting is complete. If the PCM was substituted, replace the original PCM (see page 11-232). If any other Pending or Confirmed DTCs were indicated in step 36, go to the indicated DTC's troubleshooting. ■

    NO—If the screen indicates FAILED, check for poor connections or loose terminals at the CKP sensor, the throttle body, the MAF sensor/IAT sensor, ECT sensor 1, ECT sensor 2, and the PCM. If the PCM was updated, substitute a known-good PCM (see page 11-7), then go to step 34. If the PCM was substituted, go to step 1. If the screen indicates EXECUTING, keep idling until a result comes on. If the screen indicates OUT OF CONDITION or NOT COMPLETED, go to step 34.

DTC P0562: Charging System Low Voltage

NOTE:
- Before you troubleshoot, record all freeze data and any on-board snapshot, and review the general troubleshooting information (see page 11-3).
- If any high current load accessories are installed, this DTC can be set.
- If DTC P16BB and/or P16BC is stored at the same time as DTC P0562, troubleshoot DTC P16BB and/or P16BC first, then recheck for DTC P0562.

1. Turn the ignition switch to ON (II).
2. Clear the DTC with the HDS.
3. Start the engine.
4. Check under these conditions:
   - A/C on
   - Temperature control at maximum cool
   - Blower fan at maximum speed
   - Rear window defogger on
   - Headlights on high beam
5. Hold the engine speed at 2,000 rpm (in P or N) for 1 minute.
6. Check for Pending or Confirmed DTCs with the HDS.

   Is DTC P0562 indicated?

   YES—Replace the alternator (see page 4-36), then go to step 7.

   NO—Intermittent failure, the system is OK at this time. Check for poor connections or loose terminals at the alternator and the under-hood fuse/relay box, and check the battery performance (see page 22-90). ■
7. Turn the ignition switch to ON (II).
8. Reset the PCM with the HDS.
9. Do the PCM idle learn procedure (see page 11-313).
10. Start the engine.

11. Check under these conditions:

    - A/C on
    - Temperature control at maximum cool
    - Blower fan at maximum speed
    - Rear window defogger on
    - Headlights on high beam

12. Hold the engine speed at 2,000 rpm (in P or N) for 1 minute.

13. Check for Pending or Confirmed DTCs with the HDS.

    Is DTC P0562 indicated?

    YES—Check for poor connections or loose terminals at the alternator and the under-hood fuse/relay box, then go to step 1.

    NO—Troubleshooting is complete. If any other Pending or Confirmed DTCs are indicated, go to the indicated DTC's troubleshooting.■

DTC P0563: PCM Power Source Circuit Unexpected Voltage

NOTE: Before you troubleshoot, record all freeze data and any on-board snapshot, and review the general troubleshooting information (see page 11-3).

1. Turn the ignition switch to ON (II).

2. Clear the DTC with the HDS.

3. Turn the ignition switch to LOCK (0).

4. Wait 10 seconds.

5. Turn the ignition switch to ON (II).

6. Check for Pending or Confirmed DTCs with the HDS.

    Is DTC P0563 indicated?

    YES—Go to step 7.

    NO—Intermittent failure, the system is OK at this time. Check for poor connections or loose terminals at PGM-FI main relay 1 (FI MAIN) and the No. 8 FI ECU (PCM) (15 A) fuse in the under-hood fuse/relay box and the PCM.■

7. Turn the ignition switch to LOCK (0).

8. Jump the SCS line with the HDS.

9. Disconnect PCM connector E (31P).

(cont'd)

DTC Troubleshooting (cont'd)

10. Measure the voltage between PCM connector terminal E5 and body ground.

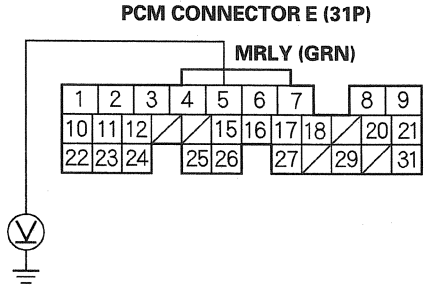

Wire side of female terminals

Is there battery voltage?

YES—Go to step 13.

NO—Go to step 11.

11. Remove the left kick panel (see step 3 on page 20-67). Then remove PGM-FI main relay 1 (FI MAIN) (A) from the driver's under-dash fuse/relay box.

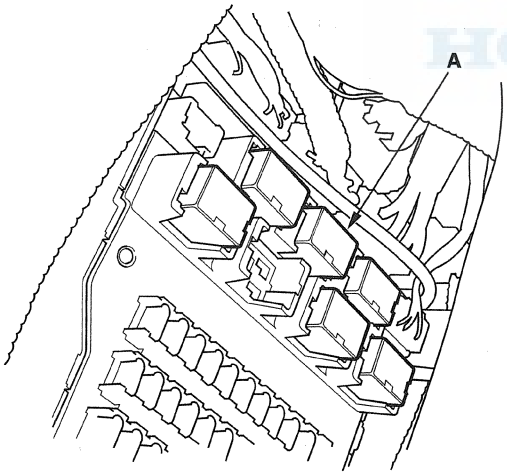

12. Check for continuity between PCM connector terminal E5 and body ground.

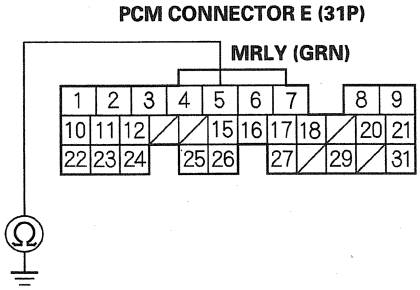

Wire side of female terminals

Is there continuity?

YES—Repair short in the wire between the PCM (E5) and PGM-FI main relay 1 (FI MAIN), then go to step 20.

NO—Go to step 19.

13. Reconnect PCM connector E (31P).

14. Measure the voltage between PCM connector terminal E5 and body ground.

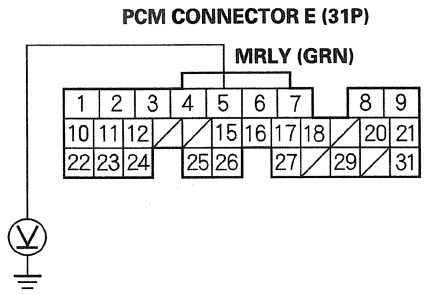

Wire side of female terminals

Is there battery voltage?

YES—Go to step 15.

NO—Go to step 27.

15. Disconnect PCM connector A (31P).

16. Measure the voltage between PCM connector terminal A4 and body ground.

PCM CONNECTOR A (31P)

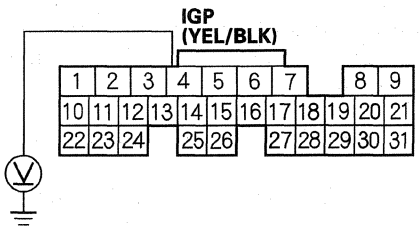

Wire side of female terminals

Is there battery voltage?

YES—Go to step 17.

NO—Go to step 27.

17. Remove the left kick panel (see step 3 on page 20-67). Then remove PGM-FI main relay 1 (FI MAIN) (A) from the driver's under-dash fuse/relay box.

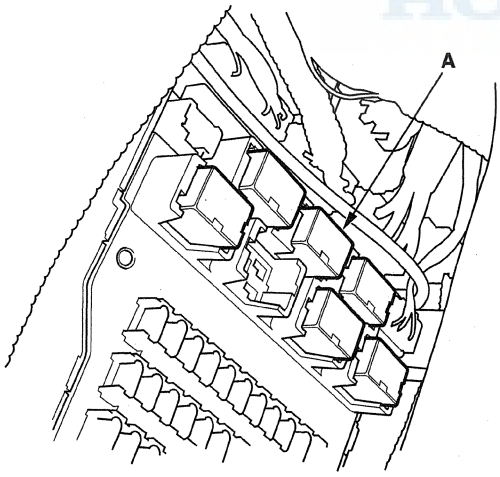

18. Measure the voltage between PCM connector terminal A4 and body ground.

PCM CONNECTOR A (31P)

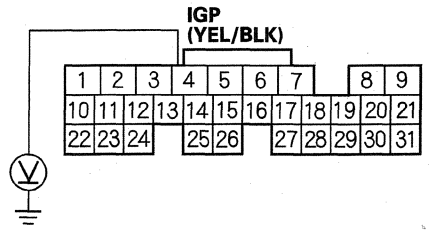

Wire side of female terminals

Is there battery voltage?

YES—Repair short to power in the wire between the PCM (A4) and PGM-FI main relay 1 (FI MAIN), then go to step 20.

NO—Go to step 19.

19. Replace PGM-FI main relay 1 (FI MAIN) (A).

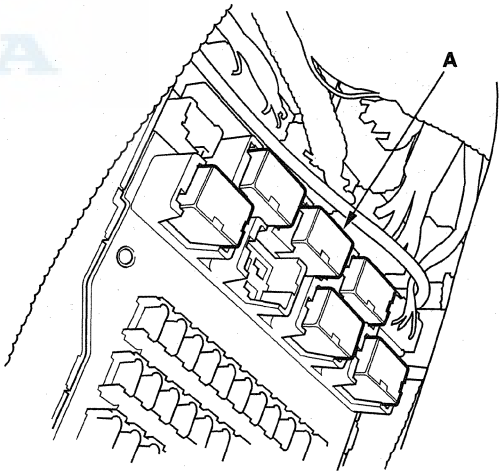

20. Reconnect all connectors.

21. Turn the ignition switch to ON (II).

22. Reset the PCM with the HDS.

(cont'd)

DTC Troubleshooting (cont'd)

23. Turn the ignition switch to LOCK (0).

24. Wait 10 seconds.

25. Do the PCM idle learn procedure (see page 11-313).

26. Check for Pending or Confirmed DTCs with the HDS.

    Is DTC P0563 indicated?

    YES—Check for poor connections or loose terminals at PGM-FI main relay 1 (FI MAIN) and the PCM, then go to step 1.

    NO—Troubleshooting is complete. If any other Pending or Confirmed DTCs are indicated, go to the indicated DTC's troubleshooting. ■

27. Reconnect all connectors.

28. Update the PCM if it does not have the latest software (see page 11-230), or substitute a known-good PCM (see page 11-7).

29. Check for Pending or Confirmed DTCs with the HDS.

    Is DTC P0563 indicated?

    YES—Check for poor connections or loose terminals at PGM-FI main relay 1 (FI MAIN) and the PCM. If the PCM was updated, substitute a known-good PCM (see page 11-7), then recheck. If the PCM was substituted, go to step 1.

    NO—If the PCM was updated, troubleshooting is complete. If the PCM was substituted, replace the original PCM (see page 11-232). If any other Pending or Confirmed DTCs are indicated, go to the indicated DTC's troubleshooting. ■

DTC P0602: PCM Programming Error

NOTE:
- Before you troubleshoot, record all freeze data and any on-board snapshot, and review the general troubleshooting information (see page 11-3).
- This DTC is indicated when a PCM update is not completed.
- Do not turn the ignition switch to ACC (I) or to LOCK (0) while updating the PCM. If you do, the PCM can be damaged.

1. Do the PCM update procedure (see page 11-230).

2. Check for Pending or Confirmed DTCs with the HDS.

   Is DTC P0602 indicated?

   YES—Replace the original PCM (see page 11-232). ■

   NO—The update is complete. ■

DTC P0615: Starter Cut Relay STRLD Circuit Malfunction

NOTE: Before you troubleshoot, record all freeze data and any on-board snapshot, and review the general troubleshooting information (see page 11-3).

1. Turn the ignition switch to ON (II).
2. Clear the DTC with the HDS.
3. Start the engine.
4. Check for Pending or Confirmed DTCs with the HDS.

   Is DTC P0615 indicated?

   YES—Go to step 5.

   NO—Intermittent failure, the system is OK at this time. Check for poor connections or loose terminals at starter cut relay 1, starter cut relay 2, and the PCM. ■
5. Turn the ignition switch to LOCK (0).
6. Check the No. 32 STRLD (7.5 A) fuse in the auxiliary under-dash fuse/relay holder.

   Is the fuse OK?

   YES—Go to step 7.

   NO—Replace the No. 32 STRLD (7.5 A) fuse in the auxiliary under-dash fuse/relay holder, then go to step 12.
7. Jump the SCS line with the HDS.
8. Disconnect PCM connector D (17P).
9. Remove starter cut relay 1 (A) from auxiliary under-dash fuse/relay holder.

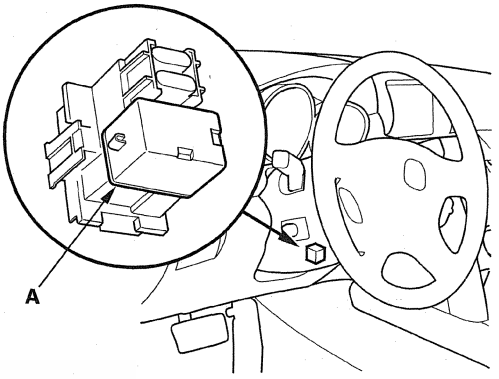

10. Connect starter cut relay 1 4P connector terminal No. 2 to body ground with a jumper wire.

STARTER CUT RELAY 1 4P CONNECTOR

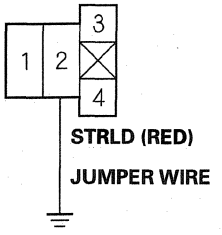

Terminal side of female terminals

(cont'd)

DTC Troubleshooting (cont'd)

11. Check for continuity between PCM connector terminal D5 and body ground.

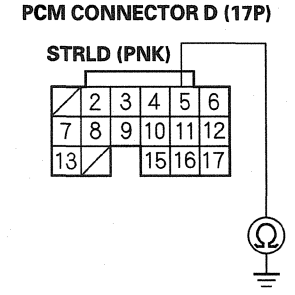

Wire side of female terminals

Is there continuity?

YES—Go to step 17.

NO—Repair open in the wire between the PCM (D5) and starter cut relay 1, then go to step 12.

12. Reconnect all connectors.
13. Turn the ignition switch to ON (II).
14. Reset the PCM with the HDS.
15. Do the PCM idle learn procedure (see page 11-313).
16. Check for Pending or Confirmed DTCs with the HDS.

Is DTC P0615 indicated?

YES—Check for poor connections or loose terminals at starter cut relay 1 and the PCM, then go to step 1.

NO—Troubleshooting is complete. If any other Pending or Confirmed DTCs are indicated, go to the indicated DTC's troubleshooting. ■

17. Reconnect all connectors.
18. Update the PCM if it does not have the latest software (see page 11-230), or substitute a known-good PCM (see page 11-7).
19. Check for Pending or Confirmed DTCs with the HDS.

Is DTC P0615 indicated?

YES—Check for poor connections or loose terminals at starter cut relay 1 and the PCM, then go to step 1. If the PCM was updated, substitute a known-good PCM (see page 11-7), then recheck. If the PCM was substituted, go to step 1.

NO—If the PCM was updated, troubleshooting is complete. If the PCM was substituted, replace the original PCM (see page 11-232). If any other Pending or Confirmed DTCs are indicated, go to the indicated DTC's troubleshooting. ■

DTC P062F: PCM Internal Control Module Keep Alive Memory (KAM) Error

NOTE: Before you troubleshoot, record all freeze data and any on-board snapshot, and review the general troubleshooting information (see page 11-3).

1. Turn the ignition switch to ON (II).
2. Clear the DTC with the HDS.
3. Check for Pending or Confirmed DTCs with the HDS.

   Are any Pending or Confirmed DTCs indicated?

   YES—Go to step 4.

   NO—Intermittent failure, the system is OK at this time. ■
4. Update the PCM if it does not have the latest software (see page 11-230), or substitute a known-good PCM (see page 11-7).
5. Check for Pending or Confirmed DTCs with the HDS.

   Is DTC P062F indicated?

   YES—If the PCM was updated, substitute a known-good PCM (see page 11-7), then recheck. If the PCM was substituted, go to step 1.

   NO—If the PCM was updated, troubleshooting is complete. If the PCM was substituted, replace the original PCM (see page 11-232). If any other Pending or Confirmed DTCs are indicated, go to the indicated DTC's troubleshooting. ■

DTC P0630: VIN Not Programmed or Mismatch

NOTE:
- Before you troubleshoot, record all freeze data and any on-board snapshot, and review the general troubleshooting information (see page 11-3).
- This DTC is stored only when the PCM does not have the VIN information of the vehicle. Use the HDS to input the missing VIN information.

1. Turn the ignition switch to ON (II).
2. Check the VIN with the HDS.

   Does the HDS show the vehicle's VIN?

   YES—Go to step 5.

   NO—Go to step 3.
3. Input the VIN to the PCM with the HDS.

   Does the screen show COMPLETE?

   YES—Go to step 5.

   NO—Go to step 4.
4. Check for DTCs with the HDS.

   Is DTC P062F indicated?

   YES—Do the troubleshooting for P062F (see page 11-143). ■

   NO—Go to step 9.
5. Clear the DTC with the HDS.
6. Turn the ignition switch to LOCK (0).
7. Turn the ignition switch to ON (II), and wait 5 seconds.

(cont'd)

DTC Troubleshooting (cont'd)

8. Check for Pending or Confirmed DTCs with the HDS.

   Is DTC P0630 indicated?

   YES—Go to step 9.

   NO—Intermittent failure, the system is OK at this time. ■

9. Update the PCM if it does not have the latest software (see page 11-230), or substitute a known-good PCM (see page 11-7).

10. Check for Pending or Confirmed DTCs with the HDS.

    Is DTC P0630 indicated?

    YES—If the PCM was updated, substitute a known-good PCM (see page 11-7), then recheck. If the PCM was substituted, go to step 1.

    NO—If the PCM was updated, troubleshooting is complete. If the PCM was substituted, replace the original PCM (see page 11-232). If any other Pending or Confirmed DTCs are indicated, go to the indicated DTC's troubleshooting. ■

DTC P0685: PCM Power Control Circuit/ Internal Circuit Malfunction

NOTE:
- Before you troubleshoot, record all freeze data and any on-board snapshot, and review the general troubleshooting information (see page 11-3).
- If the problem doesn't return after you clear the DTC, or if this DTC is stored intermittently, check for loose terminals at the IGP line connectors before replacing the PCM.

1. Turn the ignition switch to ON (II).
2. Clear the DTC with the HDS.
3. Start the engine, and let it idle for 30 seconds.
4. Turn the ignition switch to LOCK (0).
5. Start the engine, and let it idle for 30 seconds.
6. Turn the ignition switch to LOCK (0).
7. Turn the ignition switch to ON (II).
8. Check for Pending or Confirmed DTCs with the HDS.

   Is DTC P0685 indicated?

   YES—Go to step 9.

   NO—Intermittent failure, the system is OK at this time. ■

9. Update the PCM if it does not have the latest software (see page 11-230), or substitute a known-good PCM (see page 11-7).
10. Start the engine, and let it idle for 30 seconds.
11. Turn the ignition switch to LOCK (0).
12. Start the engine, and let it idle for 30 seconds.
13. Turn the ignition switch to LOCK (0).
14. Turn the ignition switch to ON (II).

15. Check for Pending or Confirmed DTCs with the HDS.

    Is DTC P0685 indicated?

    YES—If the PCM was updated, substitute a known-good PCM (see page 11-7), then go to step 10. If the PCM was substituted, go to step 1.

    NO—If the PCM was updated, troubleshooting is complete. If the PCM was substituted, replace the original PCM (see page 11-232). If any other Pending or Confirmed DTCs are indicated, go to the indicated DTC's troubleshooting. ■

DTC P1109: BARO Sensor Circuit Out of Range High

NOTE: Before you troubleshoot, record all freeze data and any on-board snapshot, and review the general troubleshooting information (see page 11-3).

1. Reset the PCM with the HDS.
2. Start the engine.
3. Check for Pending or Confirmed DTCs with the HDS.

    Is DTC P1109 indicated?

    YES—Go to step 4.

    NO—Intermittent failure, the system is OK at this time. If any other Pending or Confirmed DTCs are indicated, go to the indicated DTC's troubleshooting. ■

4. Update the PCM if it does not have the latest software (see page 11-230), or substitute a known-good PCM (see page 11-7).
5. Check for Pending or Confirmed DTCs with the HDS.

    Is DTC P1109 indicated?

    YES—If the PCM was updated, substitute a known-good PCM (see page 11-7), then recheck. If the PCM was substituted, go to step 1.

    NO—If the PCM was updated, troubleshooting is complete. If the PCM was substituted, replace the original PCM (see page 11-232). If any other Pending or Confirmed DTCs are indicated, go to the indicated DTC's troubleshooting. ■

HONDA

DTC Troubleshooting (cont'd)

DTC P1116: ECT Sensor 1 Circuit Range/ Performance Problem

NOTE:
- Before you troubleshoot, record all freeze data and any on-board snapshot, and review the general troubleshooting information (see page 11-3).
- If DTC P0111 is stored at the same time as DTC P1116, troubleshoot DTC P0111 first, then recheck for DTC P1116.

1. Check for poor connections or loose terminals at ECT sensor 1 and ECT sensor 2.

   Are the connections and the terminals OK?

   YES—Go to step 2.

   NO—Repair the connections or terminals, then go to step 27.

2. Turn the ignition switch to ON (II).

3. Check for Pending or Confirmed DTCs with the HDS.

   Are DTC P1116 and P2183 indicated at the same time?

   YES—Go to step 15.

   NO—Go to step 4.

4. Start the engine, and let it idle for 10 minutes.

5. Check ECT SENSOR 1 in the DATA LIST with the HDS.

   Is about 129 °F (54 °C) or less, or 1.54 V or more indicated?

   YES—Replace ECT sensor 1 (see page 11-226), then go to step 27.

   NO—Go to step 6.

6. Turn the ignition switch to LOCK (0).

7. Drain the coolant (see page 10-6).

8. Remove ECT sensor 1 (see page 11-226).

9. Allow ECT sensor 1 to cool to the ambient temperature.

10. Note the ambient temperature.

11. Connect ECT sensor 1 to its 2P connector, but do not install it.

12. Turn the ignition switch to ON (II).

13. Note the value of ECT SENSOR 1 quickly in the DATA LIST with the HDS.

14. Compare the value of ECT SENSOR 1 and the ambient temperature.

    Does the value of ECT SENSOR 1 differ 5.4 °F (3 °C) or more from the ambient temperature?

    YES—Replace ECT sensor 1 (see page 11-226), then go to step 27.

    NO—Intermittent failure, the system is OK at this time. Reinstall ECT sensor 1, and refill the cooling system (see step 9 on page 10-7). Check for poor connections or loose terminals at ECT sensor 1, ECT sensor 2, and the PCM. ■

15. Start the engine, and let it idle for 10 minutes.

16. Check ECT SENSOR 1 in the DATA LIST with the HDS.

    Is about 118 °F (48 °C) or less, or 1.75 V or more indicated?

    YES—Replace ECT sensor 1 (see page 11-226), then go to step 27.

    NO—Go to step 17.

17. Let the engine idle 10 minutes.

18. Check ECT SENSOR 2 in the DATA LIST with the HDS.

    Is about 131 °F (55 °C) or less, or 1.50 V or more indicated?

    YES—Replace ECT sensor 2 (see page 11-226), then go to step 27.

    NO—Go to step 19.

19. Turn the ignition switch to LOCK (0).

20. Drain the coolant (see page 10-6).

21. Remove ECT sensor 1 (see page 11-226), and ECT sensor 2 (see page 11-226).

22. Allow the sensors to cool to the ambient temperature.

23. Note the ambient temperature.

24. Connect ECT sensor 1 and ECT sensor 2 to their 2P connectors, but do not install them.

25. Note the value of ECT SENSOR 1 and ECT SENSOR 2 quickly in the DATA LIST with the HDS.

26. Compare the value of ECT SENSOR 1 and the ambient temperature, and the value of ECT SENSOR 2 and the ambient temperature individually.

    Does one of sensor differ more than 5.4 °F (3 °C) from the ambient temperature?

    YES—Replace the sensor that differed more than 5.4 °F (3 °C) from the ambient temperature, then go to step 27.

    NO—Intermittent failure, the system is OK at this time. Check for poor connections or loose terminals at ECT sensor 1, ECT sensor 2, and the PCM. ■

27. Turn the ignition switch to ON (II).

28. Reset the PCM with the HDS.

29. Do the PCM idle learn procedure (see page 11-313).

30. Check for Pending or Confirmed DTCs with the HDS.

    Is DTC P0116 indicated?

    YES—Check for poor connections or loose terminals at ECT sensor 1, ECT sensor 2, and the PCM, then go to step 1.

    NO—Troubleshooting is complete. If any other Pending or Confirmed DTCs are indicated, go to the indicated DTC's troubleshooting. ■

DTC P1128: MAP Sensor Signal Lower Than Expected

NOTE:
- Before you troubleshoot, record all freeze data and any on-board snapshot, and review the general troubleshooting information (see page 11-3).
- Before troubleshooting, check for poor connections or a blockage at the intake air duct.

1. Turn the ignition switch to ON (II).

2. Check the MAP SENSOR in the DATA LIST with the HDS.

   Is there less than 54.1 kPa (16.0 in.Hg, 406 mmHg) or 1.61 V held for more than 5 seconds?

   YES—Go to step 7.

   NO—Go to step 3.

3. Clear the DTC with the HDS.

4. Start the engine. Hold the engine speed at 3,000 rpm without load (in P or N) until the radiator fan comes on, then let it idle.

5. Test-drive under these conditions:

   - Engine coolant temperature (ECT SENSOR 1) above 158 °F (70 °C)
   - Transmission in D
   - Engine speed about 1,100 rpm or more
   - Vehicle speed about 25 mph (40 km/h) under half throttle

6. Monitor the OBD STATUS for DTC P1128 in the DTCs MENU with the HDS.

   Does the screen indicate FAILED?

   YES—Go to step 7.

   NO—If the screen indicates PASSED, intermittent failure, the system is OK at this time. Check for poor connections or loose terminals at the MAP sensor and the PCM. If the screen indicates NOT COMPLETED, go to step 4 and recheck.

(cont'd)

DTC Troubleshooting (cont'd)

7. Turn the ignition switch to LOCK (0).
8. Replace the MAP sensor (see page 11-225).
9. Turn the ignition switch to ON (II).
10. Reset the PCM with the HDS.
11. Do the PCM idle learn procedure (see page 11-313).
12. Start the engine. Hold the engine speed at 3,000 rpm without load (in P or N) until the radiator fan comes on, then let it idle.
13. Test-drive under these conditions:
    - Engine coolant temperature (ECT SENSOR 1) above 158 °F (70 °C)
    - Transmission in D
    - Engine speed about 1,100 rpm or more
    - Vehicle speed about 25 mph (40 km/h) under half throttle
14. Check for Pending or Confirmed DTCs with the HDS.

    Is DTC P1128 indicated?

    YES—Check for poor connections or loose terminals at the MAP sensor and the PCM, then go to step 1.

    NO—Go to step 15.
15. Monitor the OBD STATUS for DTC P1128 in the DTCs MENU with the HDS.

    Does the screen indicate PASSED?

    YES—Troubleshooting is complete. If any other Pending or Confirmed DTCs were indicated in step 14, go to the indicated DTC's troubleshooting. ■

    NO—If the screen indicates FAILED, check for poor connections or loose terminals at the MAP sensor and the PCM, then go to step 1. If the screen indicates NOT COMPLETED, go to step 12.

DTC P1129: MAP Sensor Signal Higher than Expected

NOTE: Before you troubleshoot, record all freeze data and any on-board snapshot, and review the general troubleshooting information (see page 11-3).

1. Check for vacuum leaks in these parts:
   - PCV valve
   - PCV hose
   - EVAP canister purge valve
   - Throttle body
   - Intake manifold
   - Brake booster
   - Brake booster hose

   Are there any vacuum leaks?

   YES—Repair or replace parts with vacuum leaks, then go to step 9.

   NO—Go to step 2.
2. Start the engine. Hold the engine speed at 3,000 rpm without load (in P or N) until the radiator fan comes on, then let it idle.
3. Check the MAP SENSOR in the DATA LIST with the HDS.

   Is there more than 36.9 kPa (11.0 in.Hg, 277 mmHg) or 1.14 V held for more than 5 seconds?

   YES—Go to step 7.

   NO—Go to step 4.
4. Clear the DTC with the HDS.
5. Test-drive under these conditions:
   - Engine coolant temperature (ECT SENSOR 1) above 158 °F (70 °C)
   - Transmission in D
   - Engine speed between 1,100—5,900 rpm
   - Drive at a steady speed between 55—75 mph (88—120 km/h) for 10 seconds, then decelerate (with the throttle fully closed) for 5 seconds

6. Monitor the OBD STATUS for DTC P1129 in the DTCs MENU with the HDS.

   Does the screen indicate FAILED?

   YES—Go to step 7.

   NO—If the screen indicates PASSED, intermittent failure, the system is OK at this time. Check for poor connections or loose terminals at the MAP sensor and the PCM. If the screen indicates NOT COMPLETED, go to step 5 and recheck.

7. Turn the ignition switch to LOCK (0).

8. Replace the MAP sensor (see page 11-225).

9. Turn the ignition switch to ON (II).

10. Reset the PCM with the HDS.

11. Do the PCM idle learn procedure (see page 11-313).

12. Start the engine. Hold the engine speed at 3,000 rpm without load (in P or N) until the radiator fan comes on, then let it idle.

13. Test-drive under these conditions:

    - Engine coolant temperature (ECT SENSOR 1) above 158 °F (70 °C)
    - Transmission in D
    - Engine speed between 1,100—5,900 rpm
    - Drive at a steady speed between 55—75 mph (88—120 km/h) for 10 seconds, then decelerate (with the throttle fully closed) for 5 seconds

14. Check for Pending or Confirmed DTCs with the HDS.

    Is DTC P1129 indicated?

    YES—Check for poor connections or loose terminals at the MAP sensor and the PCM, then go to step 1.

    NO—Go to step 15.

15. Monitor the OBD STATUS for DTC P1129 in the DTCs MENU with the HDS.

    Does the screen indicate PASSED?

    YES—Troubleshooting is complete. If any other Pending or Confirmed DTCs were indicated in step 14, go to the indicated DTC's troubleshooting. ■

    NO—If the screen indicates FAILED, check for poor connections or loose terminals at the MAP sensor and the PCM, then go to step 1. If the screen indicates NOT COMPLETED, go to step 12.

DTC Troubleshooting (cont'd)

DTC P1172: Rear A/F Sensor (Bank 1, Sensor 1) Circuit Out of Range High

DTC P1174: Front A/F Sensor (Bank 2, Sensor 1) Circuit Out of Range High

NOTE:
- Before you troubleshoot, record all freeze data and any on-board snapshot, and review the general troubleshooting information (see page 11-3).
- Information marked with an asterisk (*) applies to the front bank (Bank 2).

1. Turn the ignition switch to ON (II).
2. Clear the DTC with the HDS.
3. Start the engine. Hold the engine speed at 3,000 rpm without load (in P or N) until the radiator fan comes on, then let it idle.
4. Monitor the OBD STATUS for P1172 and/or P1174* in the DTCs MENU with the HDS.

   Does the screen indicate FAILED?

   YES—Go to step 5.

   NO—If the screen indicates PASSED, intermittent failure, the system is OK at this time. Check for poor connections or loose terminals at the A/F sensor (Sensor 1) and the PCM. If the screen indicates EXECUTING, keep driving until a result comes on. If the screen indicates OUT OF CONDITION, go to step 3 and recheck.
5. Turn the ignition switch to LOCK (0).
6. Replace the A/F sensor (Sensor 1) (see page 11-227).
7. Turn the ignition switch to ON (II).
8. Reset the PCM with the HDS.
9. Do the PCM idle learn procedure (see page 11-313).
10. Start the engine. Hold the engine speed at 3,000 rpm without load (in P or N) until the radiator fan comes on, then let it idle.
11. Check for Pending or Confirmed DTCs with the HDS.

    Is DTC P1172 and/or P1174 indicated?*

    YES—Check for poor connections or loose terminals at the A/F sensor (Sensor 1) and the PCM, then go to step 1.

    NO—Go to step 12.
12. Monitor the OBD STATUS for DTC P1172 and/or P1174* in the DTCs MENU with the HDS.

    Does the screen indicate PASSED?

    YES—Troubleshooting is complete. If any other Pending or Confirmed DTCs were indicated in step 11, go to the indicated DTC's troubleshooting. ■

    NO—If the screen indicates FAILED, check for poor connections or loose terminals at the A/F sensor (Sensor 1) and the PCM, then go to step 1. If the screen indicates EXECUTING or OUT OF CONDITION, keep idling until a result comes on.

DTC P1297: ELD Circuit Low Voltage

NOTE: Before you troubleshoot, record all freeze data and any on-board snapshot, and review the general troubleshooting information (see page 11-3).

1. Turn the ignition switch to ON (II).
2. Check the ELD in the DATA LIST with the HDS.

   Is 72 A or more indicated?

   YES—Go to step 3.

   NO—Intermittent failure, the system is OK at this time. Check for poor connections or loose terminals at the ELD and the PCM. ■
3. Turn the ignition switch to LOCK (0).
4. Disconnect the ELD 3P connector.
5. Turn the ignition switch to ON (II).
6. Check the ELD in the DATA LIST with the HDS.

   Is 72 A or more indicated?

   YES—Go to step 7.

   NO—Go to step 11.
7. Turn the ignition switch to LOCK (0).
8. Jump the SCS line with the HDS.
9. Disconnect PCM connector E (31P).
10. Check for continuity between PCM connector terminal E18 and body ground.

PCM CONNECTOR E (31P)

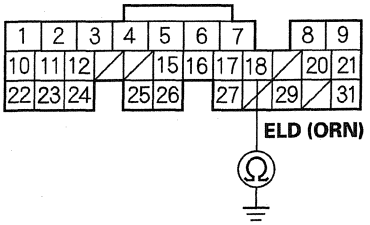

Wire side of female terminals

Is there continuity?

YES—Repair short in the wire between the PCM (E18) and the ELD, then go to step 13.

NO—Go to step 20.

11. Turn the ignition switch to LOCK (0).
12. Replace the under-hood fuse/relay box (see page 22-84).
13. Reconnect all connectors.
14. Turn the ignition switch to ON (II).
15. Reset the PCM with the HDS.
16. Do the PCM idle learn procedure (see page 11-313).
17. Start the engine.
18. Turn on the headlights.

(cont'd)

DTC Troubleshooting (cont'd)

19. Check for Pending or Confirmed DTCs with the HDS.

    Is DTC P1297 indicated?

    YES—Check for poor connections or loose terminals at the ELD unit and the PCM, then go to step 1.

    NO—Troubleshooting is complete. If any other Pending or Confirmed DTCs are indicated, go to the indicated DTC's troubleshooting. ■

20. Reconnect all connectors.

21. Update the PCM if it does not have the latest software (see page 11-230), or substitute a known-good PCM (see page 11-7).

22. Start the engine.

23. Turn on the headlights.

24. Check for Pending or Confirmed DTCs with the HDS.

    Is DTC P1297 indicated?

    YES—Check for poor connections or loose terminals at the ELD unit and the PCM. If the PCM was updated, substitute a known-good PCM (see page 11-7), then go to step 22. If the PCM was substituted, go to step 1.

    NO—If the PCM was updated, troubleshooting is complete. If the PCM was substituted, replace the original PCM (see page 11-232). If any other Pending or Confirmed DTCs are indicated, go to the indicated DTC's troubleshooting. ■

DTC P1298: ELD Circuit High Voltage

NOTE: Before you troubleshoot, record all freeze data and any on-board snapshot, and review the general troubleshooting information (see page 11-3).

1. Start the engine, and let it idle.

2. Check the ELD in the DATA LIST with the HDS.

   Is 0.2 A or less indicated?

   YES—Go to step 3.

   NO—Intermittent failure, the system is OK at this time. Check for poor connections or loose terminals at the ELD and the PCM. ■

3. Turn the ignition switch to LOCK (0).

4. Disconnect the ELD 3P connector.

5. Turn the ignition switch to ON (II).

6. Measure the voltage between ELD 3P connector terminal No. 1 and body ground.

ELD 3P CONNECTOR

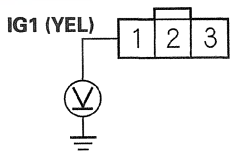

Wire side of female terminals

Is there battery voltage?

YES—Go to step 7.

NO—Repair open in the wire between the No. 18 ACG (15 A) fuse in the driver's under-dash fuse/relay box and the ELD, then go to step 14.

7. Turn the ignition switch to LOCK (0).

8. Connect ELD 3P connector terminal No. 3 to body ground with a jumper wire.

ELD 3P CONNECTOR

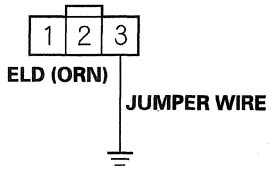

Wire side of female terminals

9. Jump the SCS line with the HDS.

10. Disconnect PCM connector E (31P).

11. Check for continuity between PCM connector terminal E18 and body ground.

PCM CONNECTOR E (31P)

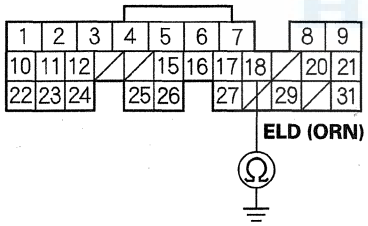

Wire side of female terminals

Is there continuity?

YES—Go to step 12.

NO—Repair open in the wire between the PCM (E18) and the ELD, then go to step 14.

12. Check for continuity between ELD 3P connector terminal No. 2 and body ground.

ELD 3P CONNECTOR

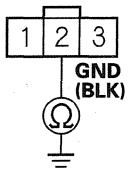

Wire side of female terminals

Is there continuity?

YES—Go to step 13.

NO—Repair open in the wire between the ELD and G301, then go to step 14.

13. Replace the under-hood fuse/relay box (see page 22-84).

14. Reconnect all connectors.

15. Turn the ignition switch to ON (II).

16. Reset the PCM with the HDS.

17. Do the PCM idle learn procedure (see page 11-313).

18. Check for Pending or Confirmed DTCs with the HDS.

Is DTC P1298 indicated?

YES—Go to step 19.

NO—Troubleshooting is complete. If any other Pending or Confirmed DTCs are indicated, go to the indicated DTC's troubleshooting. ■

(cont'd)

DTC Troubleshooting (cont'd)

19. Update the PCM if it does not have the latest software (see page 11-230), or substitute a known-good PCM (see page 11-7).

20. Check for Pending or Confirmed DTCs with the HDS.

    Is DTC P1298 indicated?

    YES—Check for poor connections or loose terminals at the ELD unit and the PCM. If the PCM was updated, substitute a known-good PCM (see page 11-7), then recheck. If the PCM was substituted, go to step 1.

    NO—If the PCM was updated, troubleshooting is complete. If the PCM was substituted, replace the original PCM (see page 11-232). If any other Pending or Confirmed DTCs are indicated, go to the indicated DTC's troubleshooting. ■

DTC P1549: Charging System High Voltage

NOTE:
- Before you troubleshoot, record all freeze data and any on-board snapshot, and review the general troubleshooting information (see page 11-3).
- If a high voltage battery (24 V, etc.) is connected to the vehicle, this DTC can be stored.

1. Turn the ignition switch to ON (II).

2. Clear the DTC with the HDS.

3. Start the engine.

4. Check under these conditions:

   - A/C off
   - Headlights off
   - Rear window defogger off

5. Hold the engine speed at 2,000 rpm (in P or N) for 1 minute.

6. Check for Pending or Confirmed DTCs with the HDS.

   Is DTC P1549 indicated?

   YES—Replace the alternator (see page 4-36), then go to step 7.

   NO—Intermittent failure, the system is OK at this time. Check for poor connections or loose terminals at the alternator and the under-hood fuse/relay box. ■

7. Turn the ignition switch to ON (II).

8. Reset the PCM with the HDS.

9. Do the PCM idle learn procedure (see page 11-313).

10. Start the engine.

11. Check under these conditions:

    - A/C off
    - Headlights off
    - Rear window defogger off

12. Hold the engine speed at 2,000 rpm (in P or N) for 1 minute.

13. Check for Pending or Confirmed DTCs with the HDS.

    Is DTC P1549 indicated?

    YES—Check for poor connections or loose terminals at the alternator and the under-hood fuse/relay box, then go to step 1.

    NO—Troubleshooting is complete. If any other Pending or Confirmed DTCs are indicated, go to the indicated DTC's troubleshooting. ■

DTC P16BB: Alternator B Terminal Circuit Low Voltage

NOTE: Before you troubleshoot, record all freeze data and any on-board snapshot, and review the general troubleshooting information (see page 11-3).

1. Turn the ignition switch to ON (II).

2. Clear the DTC with the HDS.

3. Start the engine.

4. Check under these conditions:

    - A/C on
    - Temperature control on maximum cool
    - Blower fan at maximum speed
    - Rear window defogger on
    - Headlights on high beam

5. Hold the engine speed at 2,000 rpm (in P or N) for 1 minute.

6. Check for Pending or Confirmed DTCs with the HDS.

    Is DTC P16BB indicated?

    YES—Go to step 7.

    NO—Intermittent failure, the system is OK at this time. Check for poor connections or loose terminals at the alternator and the under-hood fuse/relay box, and check the battery performance (see page 22-90). ■

7. Check for poor connections or loose terminals at the alternator B terminal and the under-hood fuse/relay box terminal (T101).

    Are the connections and terminals OK?

    YES—Go to step 8.

    NO—Repair the connections or terminals, then go to step 9.

(cont'd)

DTC Troubleshooting (cont'd)

8. Check for an open in the cable (+B line) between the alternator B terminal and under-hood fuse/relay box terminal (T101).

   Is the cable OK?

   YES—Replace the alternator (see page 4-36), then go to step 9.

   NO—Repair open in the cable (+B line) between the alternator and the under-hood fuse/relay box, then go to step 9.

9. Turn the ignition switch to ON (II).
10. Reset the PCM with the HDS.
11. Do the PCM idle learn procedure (see page 11-313).
12. Start the engine.
13. Check under these conditions:

    - A/C on
    - Temperature control on maximum cool
    - Blower fan at maximum speed
    - Rear window defogger on
    - Headlights on high beam

14. Hold the engine speed at 2,000 rpm (in P or N) for 1 minute.
15. Check for Pending or Confirmed DTCs with the HDS.

    Is DTC P16BB indicated?

    YES—Check for poor connections or loose terminals at the alternator and the under-hood fuse/relay box, then go to step 1.

    NO—Troubleshooting is complete. If any other Pending or Confirmed DTCs are indicated, go to the indicated DTC's troubleshooting.■

DTC P16BC: Alternator FR Terminal Circuit/ IGP Circuit Low Voltage

NOTE: Before you troubleshoot, record all freeze data and any on-board snapshot, and review the general troubleshooting information (see page 11-3).

1. Check for poor connections or loose terminals at the alternator 4P connector.

   Are the connections and terminals OK?

   YES—Go to step 2.

   NO—Repair the connections or terminals, then go to step 20.

2. Turn the ignition switch to ON (II).
3. Clear the DTC with the HDS.
4. Start the engine.
5. Check under these conditions:

   - A/C on
   - Temperature control on maximum cool
   - Blower fan at maximum speed
   - Rear window defogger on
   - Headlights on high beam

6. Hold the engine speed at 2,000 rpm (in P or N) for 1 minute.
7. Check for Pending or Confirmed DTCs with the HDS.

   Is DTC P16BC indicated?

   YES—Go to step 8.

   NO—Intermittent failure, the system is OK at this time. Check for poor connections or loose terminals at the alternator.■

8. Turn the ignition switch to LOCK (0).
9. Disconnect the alternator 4P connector.
10. Turn the ignition switch to ON (II).

11. Measure the voltage between alternator 4P connector terminal No. 1 and body ground.

ALTERNATOR 4P CONNECTOR

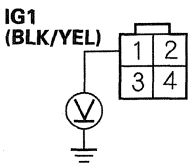

Wire side of female terminals

Is there battery voltage?

YES—Go to step 12.

NO—Repair open in the wire between the alternator (IG1 line) and the No. 18 ACG (15 A) fuse in the driver's under-dash fuse/relay box, then go to step 18.

12. Measure the voltage between alternator 4P connector terminal No. 4 and body ground.

ALTERNATOR 4P CONNECTOR

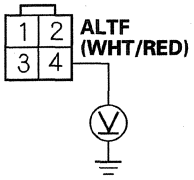

Wire side of female terminals

Is there about 5 V?

YES—Replace the alternator (see page 4-36), then go to step 18.

NO—Go to step 13.

13. Turn the ignition switch to LOCK (0).

14. Jump the SCS line with the HDS.

15. Disconnect PCM connector A (31P).

16. Connect alternator 4P connector terminal No. 4 to body ground with a jumper wire.

ALTERNATOR 4P CONNECTOR

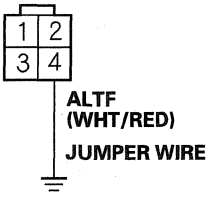

Wire side of female terminals

17. Check for continuity between PCM connector terminal A12 and body ground.

PCM CONNECTOR A (31P)

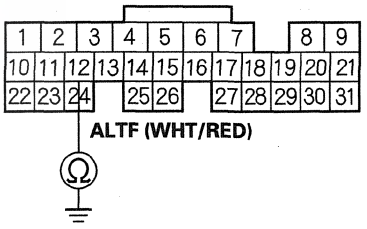

Wire side of female terminals

Is there continuity?

YES—Go to step 27.

NO—Repair open in the wire between the PCM (A12) and the alternator, then go to step 19.

(cont'd)

DTC Troubleshooting (cont'd)

18. Turn the ignition switch to LOCK (0).

19. Reconnect all connectors.

20. Turn the ignition switch to ON (II).

21. Reset the PCM with the HDS.

22. Do the PCM idle learn procedure (see page 11-313).

23. Start the engine.

24. Check under these conditions:

    - A/C on
    - Temperature control on maximum cool
    - Blower fan at maximum speed
    - Rear window defogger on
    - Headlights on high beam

25. Hold the engine speed at 2,000 rpm (in P or N) for 1 minute.

26. Check for Pending or Confirmed DTCs with the HDS.

    Is DTC P16BC indicated?

    YES—Check for poor connections or loose terminals at the alternator and the PCM, then go to step 1.

    NO—Troubleshooting is complete. If any other Pending or Confirmed DTCs are indicated, go to the indicated DTC's troubleshooting. ■

27. Reconnect all connectors.

28. Update the PCM if it does not have the latest software (see page 11-230), or substitute a known-good PCM (see page 11-7).

29. Start the engine.

30. Check under these conditions:

    - A/C on
    - Temperature control at maximum cool
    - Blower fan at maximum speed
    - Rear window defogger on
    - Headlights on high beam

31. Hold the engine speed at 2,000 rpm (in P or N) for 1 minute.

32. Check for Pending or Confirmed DTCs with the HDS.

    Is DTC P16BC indicated?

    YES—Check for poor connections or loose terminals at the alternator and the PCM. If the PCM was updated, substitute a known-good PCM (see page 11-7), then go to step 29. If the PCM was substituted, go to step 1.

    NO—If the PCM was updated, troubleshooting is complete. If the PCM was substituted, replace the original PCM (see page 11-232). If any other Pending or Confirmed DTCs are indicated, go to the indicated DTC's troubleshooting. ■

DTC P16BD: Starter Relay 2 Malfunction

NOTE: Before you troubleshoot, record all freeze data and any on-board snapshot, and review the general troubleshooting information (see page 11-3).

1. Turn the ignition switch to ON (II).
2. Clear the DTC with the HDS and wait 5 seconds.
3. Check for Pending or Confirmed DTCs with the HDS.

   Is DTC P16BD indicated?

   YES—Go to step 4.

   NO—Intermittent failure, the system is OK at this time. Check for poor connections or loose terminals at starter relay 2 and the PCM. ■
4. Replace starter relay 2.
5. Reset the PCM with the HDS.
6. Do the PCM idle learn procedure (see page 11-313).
7. Check for Pending or Confirmed DTCs with the HDS.

   Is DTC P16BD indicated?

   YES—Check for poor connections or loose terminals at starter relay 2 and the PCM, then go to step 1.

   NO—Troubleshooting is complete. If any other Pending or Confirmed DTCs are indicated, go to the indicated DTC's troubleshooting. ■

DTC P16BE: Starter Relay 1 Malfunction

NOTE: Before you troubleshoot, record all freeze data and any on-board snapshot, and review the general troubleshooting information (see page 11-3).

1. Turn the ignition switch to ON (II).
2. Clear the DTC with the HDS and wait 5 seconds.
3. Check for Pending or Confirmed DTCs with the HDS.

   Is DTC P16BE indicated?

   YES—Go to step 4.

   NO—Intermittent failure, the system is OK at this time. Check for poor connections or loose terminals at starter relay 1 and the PCM. ■
4. Replace starter relay 1.
5. Reset the PCM with the HDS.
6. Do the PCM idle learn procedure (see page 11-313).
7. Check for Pending or Confirmed DTCs with the HDS.

   Is DTC P16BE indicated?

   YES—Check for poor connections or loose terminals at starter relay 1 and the PCM, then go to step 1.

   NO—Troubleshooting is complete. If any other Pending or Confirmed DTCs are indicated, go to the indicated DTC's troubleshooting. ■

DTC Troubleshooting (cont'd)

DTC P16BF: Starter Cut Relay STRLY Circuit Malfunction

NOTE: Before you troubleshoot, record all freeze data and any on-board snapshot, and review the general troubleshooting information (see page 11-3).

1. Turn the ignition switch to ON (II).
2. Clear the DTC with the HDS, and wait 5 seconds.
3. Check for STARTER CUT RELAY in the DATA LIST with the HDS.

   Is OFF indicated?

   YES—Go to step 4.

   NO—Go to step 12.
4. Turn the ignition switch to START (III).
5. While holding the ignition switch in START (III), check the STARTER CUT CONTROL RETURN in the DATA LIST with the HDS.

   Is OFF indicated?

   YES—Go to step 6.

   NO—Intermittent failure, the system is OK at this time. Check for poor connections or loose terminals at starter cut relay 1, starter cut relay 2, and the PCM. ■
6. Turn the ignition switch to LOCK (0).
7. Remove starter cut relay 1 from the auxiliary under-dash fuse/relay box (see page 22-76) and starter cut relay 2 from the driver's under-dash fuse/relay box (see page 22-75).
8. Test the starter cut relays (see page 22-93).

   Are the relays OK?

   YES—Go to step 9.

   NO—Replace starter cut relay 1 and/or starter cut relay 2, then go to step 19.
9. Jump the SCS line with the HDS.
10. Disconnect PCM connector E (31P).
11. Check for continuity between PCM connector terminal E21 and body ground.

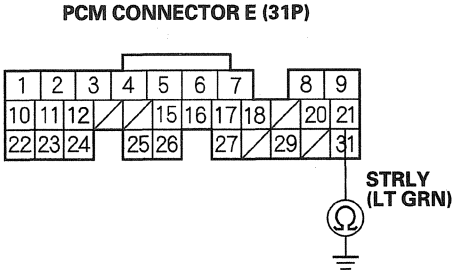

Wire side of female terminals

Is there continuity?

YES—Repair short in the wire between the PCM (E21) and starter cut relay 1 or starter cut relay 2, then go to step 19.

NO—Go to step 19.

12. Turn the ignition switch to LOCK (0).
13. Remove starter cut relay 1 from the auxiliary under-dash fuse/relay box (see page 22-76) and starter cut relay 2 from the driver's under-dash fuse/relay box (see page 22-75).
14. Test the starter cut relays (see page 22-93).

    Are the relays OK?

    YES—Go to step 15.

    NO—Replace starter cut relay 1 and/or starter cut relay 2, then go to step 19.

15. Jump the SCS line with the HDS.

16. Disconnect PCM connector E (31P).

17. Turn the ignition switch to ON (II).

18. Measure the voltage between PCM connector terminal E21 and body ground.

PCM CONNECTOR E (31P)

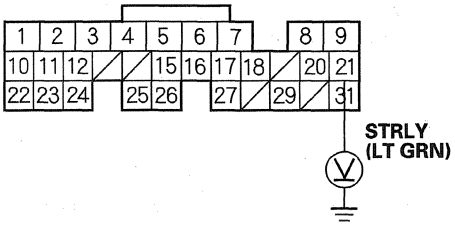

Wire side of female terminals

Is there 1.0 V or more?

YES—Repair short in the wire between the PCM (E21) and starter cut relay 1 or starter cut relay 2, then go to step 19.

NO—Go to step 24.

19. Reconnect all connectors.

20. Turn the ignition switch to ON (II).

21. Reset the PCM with the HDS.

22. Do the PCM idle learn procedure (see page 11-313).

23. Check for Pending or Confirmed DTCs with the HDS.

Is DTC P16BF indicated?

YES—Check for poor connections or loose terminals at starter cut relay 1, starter cut relay 2, and the PCM, then go to step 1.

NO—Troubleshooting is complete. If any other Pending or Confirmed DTCs are indicated, go to the indicated DTC's troubleshooting. ■

24. Turn the ignition switch to LOCK (0).

25. Reconnect all connectors.

26. Update the PCM if it does not have the latest software (see page 11-230), or substitute a known-good PCM (see page 11-7).

27. Check for Pending or Confirmed DTCs with the HDS.

Is DTC P16BF indicated?

YES—Check for poor connections or loose terminals at starter cut relay 1, starter cut relay 2, and the PCM. If the PCM was updated, substitute a known-good PCM (see page 11-7), then recheck. If the PCM was substituted, go to step 1.

NO—If the PCM was updated, troubleshooting is complete. If the PCM was substituted, replace the original PCM (see page 11-232). If any other Pending or Confirmed DTCs are indicated, go to the indicated DTC's troubleshooting. ■

DTC Troubleshooting (cont'd)

DTC P2183: ECT Sensor 2 Circuit Range/ Performance Problem

NOTE:
- Before you troubleshoot, record all freeze data and any on-board snapshot, and review the general troubleshooting information (see page 11-3).
- If DTC P0111 is stored at the same time as DTC P2183, troubleshoot DTC P0111 first, then recheck for DTC P2183.

1. Check for poor connections or loose terminals at ECT sensor 1 and ECT sensor 2.

   Are the connections and terminals OK?

   YES—Go to step 2.

   NO—Repair the connections or terminals, then go to step 27.

2. Turn the ignition switch to ON (II).
3. Check for Pending or Confirmed DTCs with the HDS.

   Are DTC P1116 and P2183 indicated at the same time?

   YES—Go to step 15.

   NO—Go to step 4.

4. Start the engine, and let it idle for 10 minutes.
5. Check ECT SENSOR 2 in the DATA LIST with the HDS.

   Is about 131 °F (55 °C) or less, or 1.50 V or more indicated?

   YES—Replace ECT sensor 2 (see page 11-226), then go to step 27.

   NO—Go to step 6.

6. Turn the ignition switch to LOCK (0).
7. Drain the coolant (see page 10-6).
8. Remove ECT sensor 2 (see page 11-226).
9. Allow ECT sensor 2 to cool to the ambient temperature.
10. Note the ambient temperature.
11. Connect ECT sensor 2 to its 2P connector, but do not install it.
12. Turn the ignition switch to ON (II).
13. Note the value of ECT SENSOR 2 quickly in the DATA LIST with the HDS.
14. Compare the value of ECT SENSOR 2 and the ambient temperature.

    Does ECT SENSOR 2 differ 5.4 °F (3 °C) or more from the ambient temperature?

    YES—Replace ECT sensor 2 (see page 11-226), then go to step 27.

    NO—Intermittent failure, the system is OK at this time. Check for poor connections or loose terminals at ECT sensor 1, ECT sensor 2, and the PCM. ■
15. Start the engine, and let it idle for 10 minutes.
16. Check ECT SENSOR 1 in the DATA LIST with the HDS.

    Is about 118 °F (48 °C) or less, or 1.75 V or more indicated?

    YES—Replace ECT sensor 1 (see page 11-226), then go to step 27.

    NO—Go to step 17.

17. Let the engine idle 10 minutes.
18. Check ECT SENSOR 2 in the DATA LIST with the HDS.

    Is about 131 °F (55 °C) or less, or 1.50 V or more indicated?

    YES—Replace ECT sensor 2 (see page 11-226), then go to step 27.

    NO—Go to step 19.

19. Turn the ignition switch to LOCK (0).

20. Drain the coolant (see page 10-6).

21. Remove ECT sensor 1 (see page 11-226), and ECT sensor 2 (see page 11-226).

22. Allow the sensors to cool to the ambient temperature.

23. Note the ambient temperature.

24. Connect ECT sensor 1 and ECT sensor 2 to their 2P connectors, but do not install them.

25. Note the value of ECT SENSOR 1 and ECT SENSOR 2 quickly in the DATA LIST with the HDS.

26. Compare the value of ECT SENSOR 1 and the ambient temperature, and the value of ECT SENSOR 2 and the ambient temperature individually.

    Does one of the sensors differ more than 5.4 °F (3 °C) from the ambient temperature?

    YES—Replace the sensor that differed more than 5.4 °F (3 °C) from the ambient temperature, then go to step 27.

    NO—Intermittent failure, the system is OK at this time. Check for poor connections or loose terminals at ECT sensor 1, ECT sensor 2, and the PCM. ■

27. Turn the ignition switch to ON (II).

28. Reset the PCM with the HDS.

29. Do the PCM idle learn procedure (see page 11-313).

30. Check for Pending or Confirmed DTCs with the HDS.

    Is DTC P2183 indicated?

    YES—Check for poor connections or loose terminals at ECT sensor 1, ECT sensor 2, and the PCM, then go to step 1.

    NO—Troubleshooting is complete. If any other Pending or Confirmed DTCs are indicated, go to the indicated DTC's troubleshooting. ■

HONDA

DTC Troubleshooting (cont'd)

DTC P2184: ECT Sensor 2 Circuit Low Voltage

NOTE: Before you troubleshoot, record all freeze data and any on-board snapshot, and review the general troubleshooting information (see page 11-3).

1. Turn the ignition switch to ON (II).
2. Check ECT SENSOR 2 in the DATA LIST with the HDS.

   Is about 356 °F (180 °C) or more, or 0.08 V or less indicated?

   YES—Go to step 3.

   NO—Intermittent failure, the system is OK at this time. Check for poor connections or loose terminals at ECT sensor 2 and the PCM. ■
3. Turn the ignition switch to LOCK (0).
4. Disconnect ECT sensor 2 2P connector.
5. Turn the ignition switch to ON (II).
6. Check ECT SENSOR 2 in the DATA LIST with the HDS.

   Is about 356 °F (180 °C) or more, or 0.08 V or less indicated?

   YES—Go to step 7.

   NO—Go to step 11.
7. Turn the ignition switch to LOCK (0).
8. Jump the SCS line with the HDS.
9. Disconnect PCM connector B (24P).
10. Check for continuity between ECT sensor 2 2P connector terminal No. 1 and body ground.

ECT SENSOR 2 2P CONNECTOR

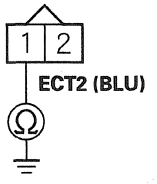

Wire side of female terminals

Is there continuity?

YES—Repair short in the wire between ECT sensor 2 and the PCM (B24), then go to step 13.

NO—Go to step 18.

11. Turn the ignition switch to LOCK (0).
12. Replace ECT sensor 2 (see page 11-226).
13. Reconnect all connectors.
14. Turn the ignition switch to ON (II).
15. Reset the PCM with the HDS.
16. Do the PCM idle learn procedure (see page 11-313).
17. Check for Pending or Confirmed DTCs with the HDS.

    Is DTC P2184 indicated?

    YES—Check for poor connections or loose terminals at ECT sensor 2 and the PCM, then go to step 1.

    NO—Troubleshooting is complete. If any other Pending or Confirmed DTCs are indicated, go to the indicated DTC's troubleshooting. ■

18. Reconnect all connectors.

19. Update the PCM if it does not have the latest software (see page 11-230), or substitute a known-good PCM (see page 11-7).

20. Check for Pending or Confirmed DTCs with the HDS.

    Is DTC P2184 indicated?

    YES—Check for poor connections or loose terminals at ECT sensor 2 and the PCM. If the PCM was updated, substitute a known-good PCM (see page 11-7), then recheck. If the PCM was substituted, go to step 1.

    NO—If the PCM was updated, troubleshooting is complete. If the PCM was substituted, replace the original PCM (see page 11-232). If any other Pending or Confirmed DTCs are indicated, go to the indicated DTC's troubleshooting. ■

DTC P2185: ECT Sensor 2 Circuit High Voltage

NOTE: Before you troubleshoot, record all freeze data and any on-board snapshot, and review the general troubleshooting information (see page 11-3).

1. Turn the ignition switch to ON (II).

2. Check ECT SENSOR 2 in the DATA LIST with the HDS.

    Is about −40 °F (−40 °C) or less, or 4.90 V or more indicated?

    YES—Go to step 3.

    NO—Intermittent failure, the system is OK at this time. Check for poor connections or loose terminals at ECT sensor 2 and the PCM. ■

3. Turn the ignition switch to LOCK (0).

4. Disconnect ECT sensor 2 2P connector.

5. Connect ECT sensor 2 2P connector terminals No. 1 and No. 2 with a jumper wire.

ECT SENSOR 2 2P CONNECTOR

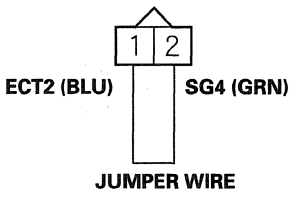

Wire side of female terminals

(cont'd)

DTC Troubleshooting (cont'd)

6. Turn the ignition switch to ON (II).
7. Check ECT SENSOR 2 in the DATA LIST with the HDS.

   Is about −40 °F (−40 °C) or less, or 4.90 V or more indicated?

   YES—Go to step 8.

   NO—Go to step 18.
8. Turn the ignition switch to LOCK (0).
9. Remove the jumper wire from ECT sensor 2 2P connector.
10. Turn the ignition switch to ON (II).
11. Measure the voltage between ECT sensor 2 2P connector terminal No. 1 and body ground.

ECT SENSOR 2 2P CONNECTOR

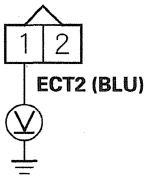

Wire side of female terminals

Is there about 5 V?

YES—Go to step 12.

NO—Go to step 17.

12. Turn the ignition switch to LOCK (0).
13. Jump the SCS line with the HDS.
14. Disconnect PCM connector E (31P).
15. Connect ECT sensor 2 2P connector terminal No. 2 to body ground with a jumper wire.

ECT SENSOR 2 2P CONNECTOR

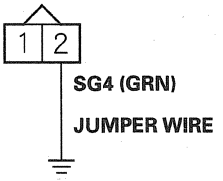

Wire side of female terminals

16. Check for continuity between PCM connector terminal E1 and body ground.

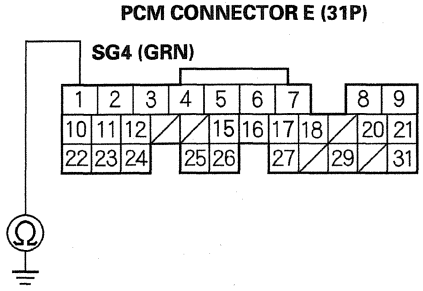

Wire side of female terminals

Is there continuity?

YES—Go to step 25.

NO—Repair open in the wire between the PCM (E1) and ECT sensor 2, then go to step 20.

17. Measure the voltage between PCM connector terminal B24 and body ground.

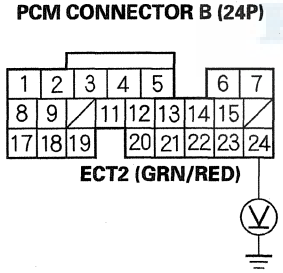

Wire side of female terminals

Is there about 5 V?

YES—Repair open in the wire between the PCM (B24) and ECT sensor 2, then go to step 20.

NO—Go to step 25.

18. Turn the ignition switch to LOCK (0).
19. Replace ECT sensor 2 (see page 11-226).
20. Reconnect all connectors.
21. Turn the ignition switch to ON (II).
22. Reset the PCM with the HDS.
23. Do the PCM idle learn procedure (see page 11-313).
24. Check for Pending or Confirmed DTCs with the HDS.

Is DTC P2185 indicated?

YES—Check for poor connections or loose terminals at ECT sensor 2 and the PCM, then go to step 1.

NO—Troubleshooting is complete. If any other Pending or Confirmed DTCs are indicated, go to the indicated DTC's troubleshooting. ■

(cont'd)

DTC Troubleshooting (cont'd)

25. Reconnect all connectors.

26. Update the PCM if it does not have the latest software (see page 11-230), or substitute a known-good PCM (see page 11-7).

27. Check for Pending or Confirmed DTCs with the HDS.

    Is DTC P2185 indicated?

    YES—Check for poor connections or loose terminals at ECT sensor 2 and the PCM. If the PCM was updated, substitute a known-good PCM (see page 11-7), then recheck. If the PCM was substituted, go to step 1.

    NO—If the PCM was updated, troubleshooting is complete. If the PCM was substituted, replace the original PCM (see page 11-232). If any other Pending or Confirmed DTCs are indicated, go to the indicated DTC's troubleshooting. ■

DTC P2195: Rear A/F Sensor (Bank 1, Sensor 1) Signal Stuck Lean

DTC P2197: Front A/F Sensor (Bank 2, Sensor 1) Signal Stuck Lean

NOTE:
- Before you troubleshoot, record all freeze data and any on-board snapshot, and review the general troubleshooting information (see page 11-3).
- Information marked with an asterisk (*) applies to the front bank (Bank 2).
- If the vehicle was out of fuel and the engine stalled before this DTC was stored, refuel, and clear the DTC with the HDS.
- If DTC P2101, P2108, P2118, P2135, P2138, P2176, U0107, or a combination of P2122 and P2127, P2122 and P2138 or P2127 and P2138 is stored at the same time as DTC P2195 (P2197)*, troubleshoot those DTCs first, then recheck for DTC P2195 (P2197)*.

1. Check for dirt or debris in the MAF sensor/IAT sensor.

   Is it dirty?

   YES—Remove the debris. If needed, replace the MAF sensor/IAT sensor (see page 11-225).

   NO—Go to step 2.

2. Check the installation of the A/F sensor (Sensor 1).

   Is the A/F sensor loose or disconnected from the exhaust pipe?

   YES—Go to step 7.

   NO—Go to step 3.

3. Turn the ignition switch to ON (II).

4. Clear the DTC with the HDS.

5. Start the engine, and let it idle for 2 minutes.

6. Check for Pending or Confirmed DTCs with the HDS.

   Is DTC P2195 and/or P2197 indicated?*

   YES—Check for poor connections or loose terminals at the A/F sensor (Sensor 1) and the PCM, then go to step 14.

   NO—Intermittent failure, the system is OK at this time. Check for poor connections or loose terminals at the A/F sensor (Sensor 1) and the PCM. If any other Pending or Confirmed DTCs are indicated, go to the indicated DTC's troubleshooting. ■

7. Turn the ignition switch to LOCK (0).

8. Reinstall the A/F sensor (Sensor 1) (see page 11-227).

9. Turn the ignition switch to ON (II).

10. Reset the PCM with the HDS.

11. Do the PCM idle learn procedure (see page 11-313).

12. Check for Pending or Confirmed DTCs with the HDS.

    Is DTC P2195 and/or P2197 indicated?*

    YES—Check for poor connections or loose terminals at the A/F sensor (Sensor 1) and the PCM, then go to step 1.

    NO—Go to step 13.

13. Monitor the OBD STATUS for DTC P2195 and/or P2197* in the DTCs MENU with the HDS.

    Does the screen indicate PASSED?

    YES—Troubleshooting is complete. If any other Pending or Confirmed DTCs were indicated in step 12, go to the indicated DTC's troubleshooting. ■

    NO—If the screen indicates FAILED, check for poor connections or loose terminals at the A/F sensor (Sensor 1) and the PCM, then go to step 1. If the screen indicates NOT COMPLETED, keep idling until a result comes on.

14. Update the PCM if it does not have the latest software (see page 11-230), or substitute a known-good PCM (see page 11-7).

15. Start the engine, and let it idle for 2 minutes.

16. Check for Pending or Confirmed DTCs with the HDS.

    Is DTC P2195 and/or P2197 indicated?*

    YES—Check for poor connections or loose terminals at the A/F sensor (Sensor 1) and the PCM. If the PCM was updated, substitute a known-good PCM (see page 11-7), then go to step 15. If the PCM was substituted, go to step 1.

    NO—Go to step 17.

17. Monitor the OBD STATUS for DTC P2195 and/or P2197* in the DTCs MENU with the HDS.

    Does the screen indicate PASSED?

    YES—If the PCM was updated, troubleshooting is complete. If the PCM was substituted, replace the original PCM (see page 11-232). If any other Pending or Confirmed DTCs were indicated in step 16, go to the indicated DTC's troubleshooting. ■

    NO—If the screen indicates FAILED, check for poor connections or loose terminals at the A/F sensor (Sensor 1) and the PCM. If the PCM was updated, substitute a known-good PCM (see page 11-7), then go to step 15. If the PCM was substituted, go to step 1. If the screen indicates NOT COMPLETED, keep idling until a result comes on.

DTC Troubleshooting (cont'd)

DTC P2227: BARO Sensor Circuit Range/ Performance Problem

NOTE:
- Before you troubleshoot, record all freeze data and any on-board snapshot, and review the general troubleshooting information (see page 11-3).
- If DTC P0107, P0108, P1128, and/or P1129 are stored at the same time as DTC P2227, troubleshoot those DTCs first, then recheck for DTC P2227.

1. Turn the ignition switch to ON (II), and wait 2 seconds.
2. Check the BARO SENSOR in the DATA LIST with the HDS.

   Is about 101 kPa (29.9 in.Hg, 760 mmHg), or about 2.9 V at sea level indicated?

   YES—Go to step 3.

   NO—Go to step 8.
3. Clear the DTC with the HDS.
4. Start the engine. Hold the engine speed at 3,000 rpm without load (in P or N) until the radiator fan comes on, then let it idle.
5. Test-drive under these conditions:

   - Engine coolant temperature (ECT SENSOR 1) above 158 °F (70 °C)
   - Transmission in D
   - Throttle position between 14 deg and 45 deg for at least 3 seconds
6. Monitor the OBD STATUS for DTC P2227 in the DTCs MENU with the HDS.

   Does the screen indicate FAILED?

   YES—Go to step 7.

   NO—If the screen indicates PASSED, intermittent failure, the system is OK at this time. If the screen indicates NOT COMPLETED, go to step 4 and recheck.
7. Check the intake air system for clogging or the restrictions (foreign material, dirty air cleaner element, etc).

   Is the intake air system clogged or restricted?

   YES—Remove the clog or restriction, then go to step 9.

   NO—Go to step 8.
8. Update the PCM if it does not have the latest software (see page 11-230), or substitute a known-good PCM (see page 11-7).
9. Start the engine. Hold the engine speed at 3,000 rpm without load (in P or N) until the radiator fan comes on, then let it idle.
10. Test-drive under these conditions:

    - Engine coolant temperature (ECT SENSOR 1) above 158 °F (70 °C)
    - Transmission in D
    - Throttle position between 14 deg and 45 deg for at least 3 seconds

11. Check for Pending or Confirmed DTCs with the HDS.

Is DTC P2227 indicated?

YES—Check for poor connections or loose terminals at the PCM. If the PCM was updated, substitute a known-good PCM (see page 11-7), then go to step 9. If the PCM was substituted, go to step 1.

NO—Go to step 12.

12. Monitor the OBD STATUS for DTC P2227 in the DTCs MENU with the HDS.

Does the screen indicate PASSED?

YES—If the PCM was updated, troubleshooting is complete. If the PCM was substituted, replace the original PCM (see page 11-232). If any other Pending or Confirmed DTCs were indicated in step 11, go to the indicated DTC's troubleshooting. ■

NO—If the screen indicates FAILED, check for poor connections or loose terminals at the PCM. If the PCM was updated, substitute a known-good PCM (see page 11-7), then go to step 9. If the PCM was substituted, go to step 1. If the screen indicates NOT COMPLETED, go to step 9.

DTC P2228: BARO Sensor Circuit Low Voltage

NOTE: Before you troubleshoot, record all freeze data and any on-board snapshot, and review the general troubleshooting information (see page 11-3).

1. Turn the ignition switch to ON (II).

2. Check the BARO SENSOR in the DATA LIST with the HDS.

Is about 53 kPa (15.6 in.Hg, 397 mmHg), or 1.58 V or less indicated?

YES—Go to step 3.

NO—Intermittent failure, the system is OK at this time. ■

3. Update the PCM if it does not have the latest software (see page 11-230), or substitute a known-good PCM (see page 11-7).

4. Check for Pending or Confirmed DTCs with the HDS.

Is DTC P2228 indicated?

YES—Check for poor connections or loose terminals at the PCM. If the PCM was updated, substitute a known-good PCM (see page 11-7), then recheck. If the PCM was substituted in step 3, go to step 1.

NO—If the PCM was updated, troubleshooting is complete. If the PCM was substituted, replace the original PCM (see page 11-232). If any other Pending or Confirmed DTCs are indicated, go to the indicated DTC's troubleshooting. ■

DTC Troubleshooting (cont'd)

DTC P2229: BARO Sensor Circuit High Voltage

NOTE: Before you troubleshoot, record all freeze data and any on-board snapshot, and review the general troubleshooting information (see page 11-3).

1. Turn the ignition switch to ON (II).
2. Check the BARO SENSOR in the DATA LIST with the HDS.

   Is about 160 kPa (47.2 in.Hg, 1,200 mmHg), or 4.5 V or more indicated?

   YES—Go to step 3.

   NO—Intermittent failure, the system is OK at this time. ■
3. Update the PCM if it does not have the latest software (see page 11-230), or substitute a known-good PCM (see page 11-7).
4. Check for Pending or Confirmed DTCs with the HDS.

   Is DTC P2229 indicated?

   YES—Check for poor connections or loose terminals at the PCM. If the PCM was updated, substitute a known-good PCM (see page 11-7), then recheck. If the PCM was substituted in step 3, go to step 1.

   NO—If the PCM was updated, troubleshooting is complete. If the PCM was substituted, replace the original PCM (see page 11-232). If any other Pending or Confirmed DTCs are indicated, go to the indicated DTC's troubleshooting. ■

DTC P2237: Rear A/F Sensor (Bank 1, Sensor 1) IP Circuit High Voltage

DTC P2240: Front A/F Sensor (Bank 2, Sensor 1) IP Circuit High Voltage

NOTE:
- Before you troubleshoot, record all freeze data and any on-board snapshot, and review the general troubleshooting information (see page 11-3).
- Information marked with an asterisk (*) applies to the front bank (Bank 2).

1. Turn the ignition switch to ON (II).
2. Clear the DTC with the HDS.
3. Start the engine. Hold the engine speed at 3,000 rpm without load (in P or N) until the radiator fan comes on, then let it idle for 2 minutes.
4. Check for Pending or Confirmed DTCs with the HDS.

   Is DTC P2237 and/or P2240 indicated?*

   YES—Go to step 5.

   NO—Intermittent failure, the system is OK at this time. Check for poor connections or loose terminals at the A/F sensor (Sensor 1) and the PCM. ■
5. Turn the ignition switch to LOCK (0).
6. Jump the SCS line with the HDS.
7. Disconnect the A/F sensor (Sensor 1) 6P connector.
8. Disconnect PCM connector B (24P).

9. Connect A/F sensor (Sensor 1) 6P connector terminal No. 5 to body ground with a jumper wire.

A/F SENSOR (SENSOR 1) 6P CONNECTOR

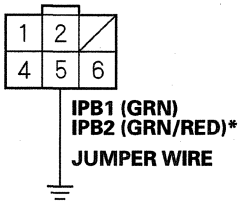

Wire side of female terminals

10. Check for continuity between PCM connector terminal B14 (B22)* and body ground.

PCM CONNECTOR B (24P)

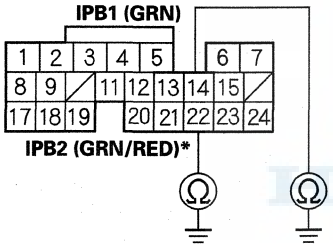

Wire side of female terminals

Is there continuity?

YES—Go to step 11.

NO—Repair open in the wire between the PCM (B14 (B22)*) and the A/F sensor (Sensor 1), then go to step 16.

11. Remove the jumper wire from the A/F sensor (Sensor 1) 6P connector, then reconnect PCM connector B (24P).

12. Turn the ignition switch to ON (II).

13. Measure the voltage between PCM connector terminals B14 (B22)* and C12.

PCM CONNECTORS

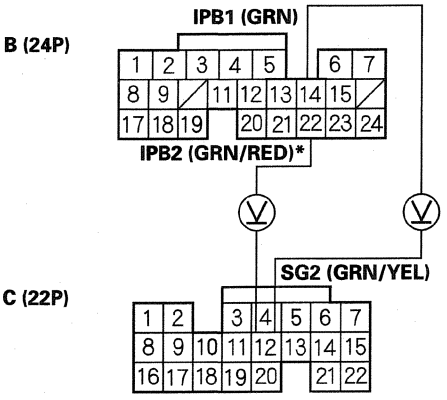

Wire side of female terminals

Is there about 0.2 V or less?

YES—Go to step 22.

NO—Go to step 14.

14. Turn the ignition switch to LOCK (0).

15. Replace the A/F sensor (Sensor 1) (see page 11-227).

16. Reconnect all connectors.

17. Turn the ignition switch to ON (II).

18. Reset the PCM with the HDS.

19. Do the PCM idle learn procedure (see page 11-313).

20. Check for Pending or Confirmed DTCs with the HDS.

Is DTC P2237 and/or P2240 indicated?*

YES—Check for poor connections or loose terminals at the A/F sensor (Sensor 1) and the PCM, then go to step 1.

NO—Go to step 21.

(cont'd)

DTC Troubleshooting (cont'd)

21. Monitor the OBD STATUS for DTC P2237 and/or P2240* in the DTCs MENU with the HDS.

    Does the screen indicate PASSED?

    YES—Troubleshooting is complete. If any other Pending or Confirmed DTCs were indicated in step 20, go to the indicated DTC's troubleshooting. ■

    NO—If the screen indicates FAILED, check for poor connections or loose terminals at the A/F sensor (Sensor 1) and the PCM, then go to step 1. If the screen indicates NOT COMPLETED, keep idling until a result comes on.

22. Turn the ignition switch to LOCK (0).

23. Reconnect all connectors.

24. Update the PCM if it does not have the latest software (see page 11-230), or substitute a known-good PCM (see page 11-7).

25. Start the engine, and let it idle.

26. Check for Pending or Confirmed DTCs with the HDS.

    Is DTC P2237 and/or P2240 indicated?*

    YES—Check for poor connections or loose terminals at the A/F sensor (Sensor 1) and the PCM. If the PCM was updated, substitute a known-good PCM (see page 11-7), then recheck. If the PCM was substituted, go to step 1.

    NO—Go to step 27.

27. Monitor the OBD STATUS for DTC P2237 and/or P2240* in the DTCs MENU with the HDS.

    Does the screen indicate PASSED?

    YES—If the PCM was updated, troubleshooting is complete. If the PCM was substituted, replace the original PCM (see page 11-232). If any other Pending or Confirmed DTCs were indicated in step 26, go to the indicated DTC's troubleshooting. ■

    NO—If the screen indicates FAILED, check for poor connections or loose terminals at the A/F sensor (Sensor 1) and the PCM. If the PCM was updated, substitute a known-good PCM (see page 11-7), then go to step 25. If the PCM was substituted, go to step 1. If the screen indicates NOT COMPLETED, keep idling until a result comes on.

DTC P2238: Rear A/F Sensor (Bank 1, Sensor 1) IP Circuit Low Voltage

DTC P2241: Front A/F Sensor (Bank 2, Sensor 1) IP Circuit Low Voltage

NOTE:
- Before you troubleshoot, record all freeze data and any on-board snapshot, and review the general troubleshooting information (see page 11-3).
- Information marked with an asterisk (*) applies to the front bank (Bank 2).

1. Turn the ignition switch to ON (II).

2. Clear the DTC with the HDS.

3. Start the engine. Hold the engine speed at 3,000 rpm without load (in P or N) until the radiator fan comes on, then let it idle for 2 minutes.

4. Check for Pending or Confirmed DTCs with the HDS.

    Is DTC P2238 and/or P2241 indicated?*

    YES—Go to step 5.

    NO—Intermittent failure, the system is OK at this time. Check for poor connections or loose terminals at the A/F sensor (Sensor 1) and the PCM. ■

5. Turn the ignition switch to LOCK (0).

6. Jump the SCS line with the HDS.

7. Disconnect the A/F sensor (Sensor 1) 6P connector.

8. Disconnect PCM connector B (24P).

9. Check for continuity between PCM connector terminals B14 (B22)* and C12.

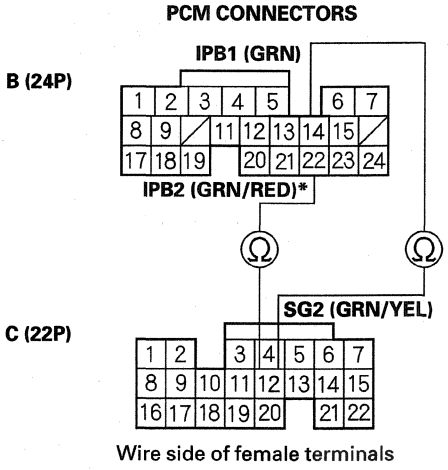

Wire side of female terminals

Is there continuity?

YES—Repair short in the wire between the PCM (B14 (B22)*) and the A/F sensor (Sensor 1), then go to step 15.

NO—Go to step 10.

10. Reconnect PCM connector B (24P).

11. Start the engine. Hold the engine speed at 3,000 rpm without load (in P or N) until the radiator fan comes on, then let it idle for 2 minutes.

12. Measure the voltage between PCM connector terminals B14 (B22)* and C12.

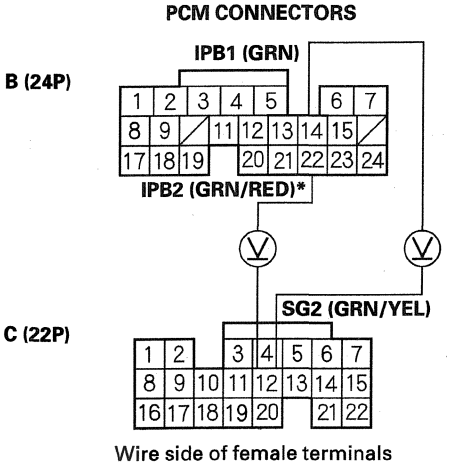

Wire side of female terminals

Is there about 0.2 V or less?

YES—Go to step 21.

NO—Go to step 13.

13. Turn the ignition switch to LOCK (0).

14. Replace the A/F sensor (Sensor 1) (see page 11-227).

15. Reconnect all connectors.

16. Turn the ignition switch to ON (II).

17. Reset the PCM with the HDS.

18. Do the PCM idle learn procedure (see page 11-313).

19. Check for Pending or Confirmed DTCs with the HDS.

Is DTC P2238 and/or P2241 indicated?*

YES—Check for poor connections or loose terminals at the A/F sensor (Sensor 1) and the PCM, then go to step 1.

NO—Go to step 20.

(cont'd)

DTC Troubleshooting (cont'd)

20. Monitor the OBD STATUS for DTC P2238 and/or P2241* in the DTCs MENU with the HDS.

    Does the screen indicate PASSED?

    YES—Troubleshooting is complete. If any other Pending or Confirmed DTCs were indicated in step 19, go to the indicated DTC's troubleshooting. ■

    NO—If the screen indicates FAILED, check for poor connections or loose terminals at the A/F sensor (Sensor 1) and the PCM, then go to step 1. If the screen indicates NOT COMPLETED, keep idling until a result comes on.

21. Turn the ignition switch to LOCK (0).

22. Reconnect all connectors.

23. Update the PCM if it does not have the latest software (see page 11-230), or substitute a known-good PCM (see page 11-7).

24. Start the engine, and let it idle.

25. Check for Pending or Confirmed DTCs with the HDS.

    Is DTC P2238 and/or P2241 indicated?*

    YES—Check for poor connections or loose terminals at the A/F sensor (Sensor 1) and the PCM. If the PCM was updated, substitute a known-good PCM (see page 11-7), then recheck. If the PCM was substituted, go to step 1.

    NO—Go to step 26.

26. Monitor the OBD STATUS for DTC P2238 and/or P2241* in the DTCs MENU with the HDS.

    Does the screen indicate PASSED?

    YES—If the PCM was updated, troubleshooting is complete. If the PCM was substituted, replace the original PCM (see page 11-232). If any other Pending or Confirmed DTCs were indicated in step 25, go to the indicated DTC's troubleshooting. ■

    NO—If the screen indicates FAILED, check for poor connections or loose terminals at the A/F sensor (Sensor 1) and the PCM. If the PCM was updated, substitute a known-good PCM (see page 11-7), then go to step 24. If the PCM was substituted, go to step 1. If the screen indicates NOT COMPLETED, keep idling until a result comes on.

DTC P2243: Rear A/F Sensor (Bank 1, Sensor 1) VCENT Circuit High Voltage

DTC P2247: Front A/F Sensor (Bank 2, Sensor 1) VCENT Circuit High Voltage

NOTE:
- Before you troubleshoot, record all freeze data and any on-board snapshot, and review the general troubleshooting information (see page 11-3).
- Information marked with an asterisk (*) applies to the front bank (Bank 2).

1. Turn the ignition switch to ON (II).

2. Clear the DTC with the HDS.

3. Start the engine. Hold the engine speed at 3,000 rpm without load (in P or N) until the radiator fan comes on, then let it idle for 2 minutes.

4. Check for Pending or Confirmed DTCs with the HDS.

    Is DTC P2243 and/or P2247 indicated?*

    YES—Go to step 5.

    NO—Intermittent failure, the system is OK at this time. Check for poor connections or loose terminals at the A/F sensor (Sensor 1) and the PCM. ■

5. Turn the ignition switch to LOCK (0).

6. Jump the SCS line with the HDS.

7. Disconnect the A/F sensor (Sensor 1) 6P connector.

8. Disconnect PCM connector B (24P).

9. Connect A/F sensor (Sensor 1) 6P connector terminal No. 6 to body ground with a jumper wire.

A/F SENSOR (SENSOR 1) 6P CONNECTOR

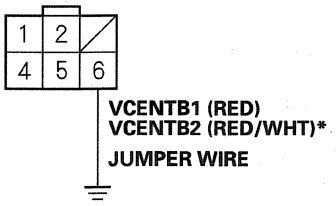

Wire side of female terminals

10. Check for continuity between PCM connector terminal B13 (B21)* and body ground.

PCM CONNECTOR B (24P)

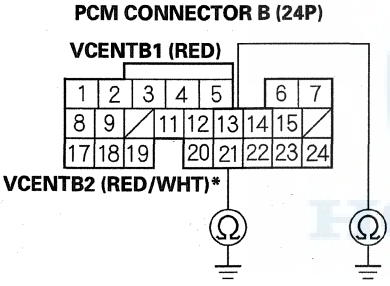

Wire side of female terminals

Is there continuity?

YES—Go to step 11.

NO—Repair open in the wire between the PCM (B13 (B21)*) and the A/F sensor (Sensor 1), then go to step 16.

11. Remove the jumper wire from the A/F sensor (Sensor 1) 6P connector, then reconnect PCM connector B (24P).

12. Turn the ignition switch to ON (II).

13. Measure the voltage between PCM connector terminals B13 (B21)* and C12.

PCM CONNECTORS

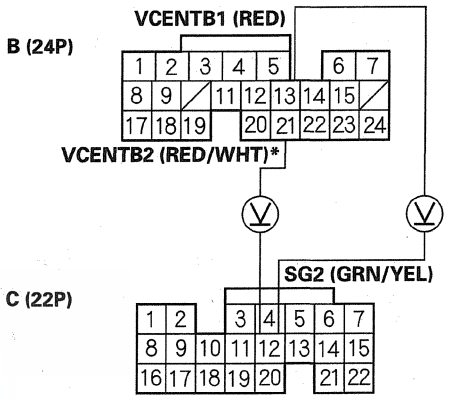

Wire side of female terminals

Is there about 0.2 V or less?

YES—Go to step 22.

NO—Go to step 14.

14. Turn the ignition switch to LOCK (0).

15. Replace the A/F sensor (Sensor 1) (see page 11-227).

16. Reconnect all connectors.

17. Turn the ignition switch to ON (II).

18. Reset the PCM with the HDS.

19. Do the PCM idle learn procedure (see page 11-313).

20. Check for Pending or Confirmed DTCs with the HDS.

Is DTC P2243 and/or P2247 indicated?*

YES—Check for poor connections or loose terminals at the A/F sensor (Sensor 1) and the PCM, then go to step 1.

NO—Go to step 21.

(cont'd)

DTC Troubleshooting (cont'd)

21. Monitor the OBD STATUS for DTC P2243 and/or P2247* in the DTCs MENU with the HDS.

    Does the screen indicate PASSED?

    YES—Troubleshooting is complete. If any other Pending or Confirmed DTCs were indicated in step 20, go to the indicated DTC's troubleshooting. ■

    NO—If the screen indicates FAILED, check for poor connections or loose terminals at the A/F sensor (Sensor 1) and the PCM, then go to step 1. If the screen indicates NOT COMPLETED, keep idling until a result comes on.

22. Turn the ignition switch to LOCK (0).

23. Reconnect all connectors.

24. Update the PCM if it does not have the latest software (see page 11-230), or substitute a known-good PCM (see page 11-7).

25. Start the engine, and let it idle.

26. Check for Pending or Confirmed DTCs with the HDS.

    Is DTC P2243 and/or P2247 indicated?*

    YES—Check for poor connections or loose terminals at the A/F sensor (Sensor 1) and the PCM. If the PCM was updated, substitute a known-good PCM (see page 11-7), then recheck. If the PCM was substituted, go to step 1.

    NO—Go to step 27.

27. Monitor the OBD STATUS for DTC P2243 and/or P2247* in the DTCs MENU with the HDS.

    Does the screen indicate PASSED?

    YES—If the PCM was updated, troubleshooting is complete. If the PCM was substituted, replace the original PCM (see page 11-232). If any other Pending or Confirmed DTCs were indicated in step 26, go to the indicated DTC's troubleshooting. ■

    NO—If the screen indicates FAILED, check for poor connections or loose terminals at the A/F sensor (Sensor 1) and the PCM. If the PCM was updated, substitute a known-good PCM (see page 11-7), then go to step 25. If the PCM was substituted, go to step 1. If the screen indicates NOT COMPLETED, keep idling until a result comes on.

DTC P2245: Rear A/F Sensor (Bank 1, Sensor 1) VCENT Circuit Low Voltage

DTC P2249: Front A/F Sensor (Bank 2, Sensor 1) VCENT Circuit Low Voltage

NOTE:
- Before you troubleshoot, record all freeze data and any on-board snapshot, and review the general troubleshooting information (see page 11-3).
- Information marked with an asterisk (*) applies to the front bank (Bank 2).

1. Turn the ignition switch to ON (II).

2. Clear the DTC with the HDS.

3. Start the engine. Hold the engine speed at 3,000 rpm without load (in P or N) until the radiator fan comes on, then let it idle for 2 minutes.

4. Check for Pending or Confirmed DTCs with the HDS.

    Is DTC P2245 and/or P2249 indicated?*

    YES—Go to step 5.

    NO—Intermittent failure, the system is OK at this time. Check for poor connections or loose terminals at the A/F sensor (Sensor 1) and the PCM. ■

5. Turn the ignition switch to LOCK (0).

6. Jump the SCS line with the HDS.

7. Disconnect the A/F sensor (Sensor 1) 6P connector.

8. Disconnect PCM connector B (24P).

9. Check for continuity between PCM connector terminal B13 (B21)* and body ground.

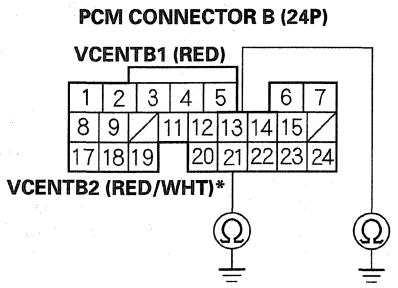

Wire side of female terminals

Is there continuity?

YES—Repair short in the wire between the PCM (B13 (B21)*) and the A/F sensor (Sensor 1), then go to step 15.

NO—Go to step 10.

10. Reconnect PCM connector B (24P).

11. Turn the ignition switch to ON (II).

12. Measure the voltage between PCM connector terminals B13 (B21)* and C12.

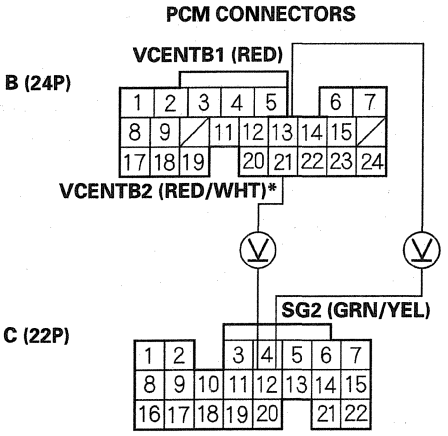

Wire side of female terminals

Is there about 0.2 V or less?

YES—Go to step 21.

NO—Go to step 13.

13. Turn the ignition switch to LOCK (0).

14. Replace the A/F sensor (Sensor 1) (see page 11-227).

15. Reconnect all connectors.

16. Turn the ignition switch to ON (II).

17. Reset the PCM with the HDS.

18. Do the PCM idle learn procedure (see page 11-313).

19. Check for Pending or Confirmed DTCs with the HDS.

Is DTC P2245 and/or P2249 indicated?*

YES—Check for poor connections or loose terminals at the A/F sensor (Sensor 1) and the PCM, then go to step 1.

NO—Go to step 20.

(cont'd)

DTC Troubleshooting (cont'd)

20. Monitor the OBD STATUS for DTC P2245 and/or P2249* in the DTCs MENU with the HDS.

    Does the screen indicate PASSED?

    YES—Troubleshooting is complete. If any other Pending or Confirmed DTCs were indicated in step 19, go to the indicated DTC's troubleshooting. ■

    NO—If the screen indicates FAILED, check for poor connections or loose terminals at the A/F sensor (Sensor 1) and the PCM, then go to step 1. If the screen indicates NOT COMPLETED, keep idling until a result comes on.

21. Turn the ignition switch to LOCK (0).

22. Reconnect all connectors.

23. Update the PCM if it does not have the latest software (see page 11-230), or substitute a known-good PCM (see page 11-7).

24. Start the engine, and let it idle.

25. Check for Pending or Confirmed DTCs with the HDS.

    Is DTC P2245 and/or P2249 indicated?*

    YES—Check for poor connections or loose terminals at the A/F sensor (Sensor 1) and the PCM. If the PCM was updated, substitute a known-good PCM (see page 11-7), then recheck. If the PCM was substituted, go to step 1.

    NO—Go to step 26.

26. Monitor the OBD STATUS for DTC P2245 and/or P2249* in the DTCs MENU with the HDS.

    Does the screen indicate PASSED?

    YES—If the PCM was updated, troubleshooting is complete. If the PCM was substituted, replace the original PCM (see page 11-232). If any other Pending or Confirmed DTCs were indicated in step 25, go to the indicated DTC's troubleshooting. ■

    NO—If the screen indicates FAILED, check for poor connections or loose terminals at the A/F sensor (Sensor 1) and the PCM. If the PCM was updated, substitute a known-good PCM (see page 11-7), then go to step 24. If the PCM was substituted, go to step 1. If the screen indicates NOT COMPLETED, keep idling until a result comes on.

DTC P2251: Rear A/F Sensor (Bank 1, Sensor 1) VS Circuit High Voltage

DTC P2254: Front A/F Sensor (Bank 2, Sensor 1) VS Circuit High Voltage

NOTE:
- Before you troubleshoot, record all freeze data and any on-board snapshot, and review the general troubleshooting information (see page 11-3).
- If DTC P2251 and/or P2254* is stored at the same time as DTC P0134 and/or P0154*, troubleshoot DTC P2251 and/or P2254* first, then recheck for P0134 and/or P0154*.
- Information marked with an asterisk (*) applies to the front bank (Bank 2).

1. Turn the ignition switch to ON (II).

2. Clear the DTC with the HDS.

3. Start the engine. Hold the engine speed at 3,000 rpm without load (in P or N) until the radiator fan comes on, then let it idle for 2 minutes.

4. Check for Pending or Confirmed DTCs with the HDS.

    Is DTC P2251 and/or P2254 indicated?*

    YES—Go to step 5.

    NO—Intermittent failure, the system is OK at this time. Check for poor connections or loose terminals at the A/F sensor (Sensor 1) and the PCM. ■

5. Turn the ignition switch to LOCK (0).

6. Jump the SCS line with the HDS.

7. Disconnect the A/F sensor (Sensor 1) 6P connector.

8. Disconnect PCM connector B (24P).

9. Connect A/F sensor (Sensor 1) 6P connector terminal No. 4 to body ground with a jumper wire.

A/F SENSOR (SENSOR 1) 6P CONNECTOR

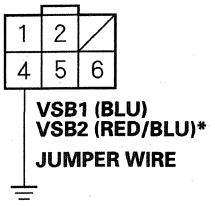

Wire side of female terminals

10. Check for continuity between PCM connector terminal B12 (B20)* and body ground.

PCM CONNECTOR B (24P)

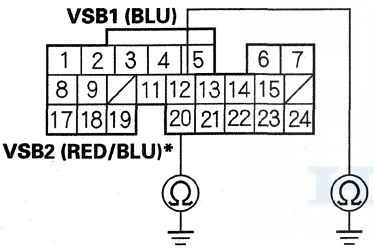

Wire side of female terminals

Is there continuity?

YES—Go to step 11.

NO—Repair open in the wire between the PCM (B12 (B20)*) and the A/F sensor (Sensor 1), then go to step 16.

11. Remove the jumper wire from the A/F sensor (Sensor 1) 6P connector, then reconnect PCM connector B (24P).

12. Turn the ignition switch to ON (II).

13. Measure the voltage between PCM connector terminals B12 (B20)* and C12.

PCM CONNECTORS

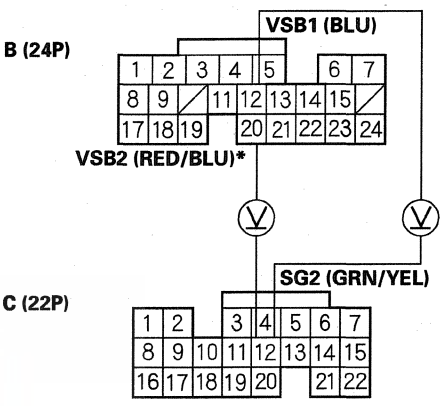

Wire side of female terminals

Is there about 0.2 V or less?

YES—Go to step 22.

NO—Go to step 14.

14. Turn the ignition switch to LOCK (0).

15. Replace the A/F sensor (see page 11-227).

16. Reconnect all connectors.

17. Turn the ignition switch to ON (II).

18. Reset the PCM with the HDS.

19. Do the PCM idle learn procedure (see page 11-313).

20. Check for Pending or Confirmed DTCs with the HDS.

Is DTC P2251 and/or P2254 indicated?*

YES—Check for poor connections or loose terminals at the A/F sensor (Sensor 1) and the PCM, then go to step 1.

NO—Go to step 21.

(cont'd)

DTC Troubleshooting (cont'd)

21. Monitor the OBD STATUS for DTC P2251 and/or P2254* in the DTCs MENU with the HDS.

    Does the screen indicate PASSED?

    YES—Troubleshooting is complete. If any other Pending or Confirmed DTCs were indicated in step 20, go to the indicated DTC's troubleshooting. ■

    NO—If the screen indicates FAILED, check for poor connections or loose terminals at the A/F sensor (Sensor 1) and the PCM, then go to step 1. If the screen indicates NOT COMPLETED, keep idling until a result comes on.

22. Turn the ignition switch to LOCK (0).

23. Reconnect all connectors.

24. Update the PCM if it does not have the latest software (see page 11-230), or substitute a known-good PCM (see page 11-7).

25. Start the engine, and let it idle.

26. Check for Pending or Confirmed DTCs with the HDS.

    If DTC P2251 and/or P2254 indicated?*

    YES—Check for poor connections or loose terminals at the A/F sensor (Sensor 1) and the PCM. If the PCM was updated, substitute a known-good PCM (see page 11-7), then recheck. If the PCM was substituted, go to step 1.

    NO—Go to step 27.

27. Monitor the OBD STATUS for DTC P2251 and/or P2254* in the DTCs MENU with the HDS.

    Does the screen indicate PASSED?

    YES—If the PCM was updated, troubleshooting is complete. If the PCM was substituted, replace the original PCM (see page 11-232). If any other Pending or Confirmed DTCs were indicated in step 26, go to the indicated DTC's troubleshooting. ■

    NO—If the screen indicates FAILED, check for poor connections or loose terminals at the A/F sensor (Sensor 1) and the PCM. If the PCM was updated, substitute a known-good PCM (see page 11-7), then go to step 25. If the PCM was substituted, go to step 1. If the screen indicates NOT COMPLETED, keep idling until a result comes on.

DTC P2252: Rear A/F Sensor (Bank 1, Sensor 1) VS Circuit Low Voltage

DTC P2255: Front A/F Sensor (Bank 2, Sensor 1) VS Circuit Low Voltage

NOTE:
- Before you troubleshoot, record all freeze data and any on-board snapshot, and review the general troubleshooting information (see page 11-3).
- Information marked with an asterisk (*) applies to the front bank (Bank 2).

1. Turn the ignition switch to ON (II).

2. Clear the DTC with the HDS.

3. Start the engine. Hold the engine speed at 3,000 rpm without load (in P or N) until the radiator fan comes on, then let it idle for 2 minutes.

4. Check for Pending or Confirmed DTCs with the HDS.

   Is DTC P2252 and/or P2255 indicated?*

   YES—Go to step 5.

   NO—Intermittent failure, the system is OK at this time. Check for poor connections or loose terminals at the A/F sensor (Sensor 1) and the PCM. ■

5. Turn the ignition switch to LOCK (0).

6. Jump the SCS line with the HDS.

7. Disconnect the A/F sensor (Sensor 1) 6P connector.

8. Disconnect PCM connector B (24P).

9. Check for continuity between PCM connector terminal B12 (B20)* and body ground.

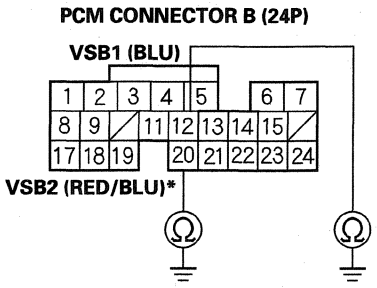

Wire side of female terminals

Is there continuity?

YES—Repair short in the wire between the PCM (B12 (B20)*) and the A/F sensor (Sensor 1), then go to step 15.

NO—Go to step 10.

10. Reconnect PCM connector B (24P).
11. Turn the ignition switch to ON (II).
12. Measure the voltage between PCM connector terminals B12 (B20)* and C12.

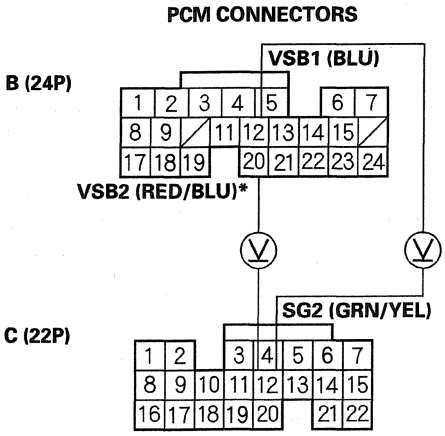

Wire side of female terminals

Is there about 0.2 V or less?

YES—Go to step 21.

NO—Go to step 13.

13. Turn the ignition switch to LOCK (0).
14. Replace the A/F sensor (Sensor 1) (see page 11-227).
15. Reconnect all connectors.
16. Turn the ignition switch to ON (II).
17. Reset the PCM with the HDS.
18. Do the PCM idle learn procedure (see page 11-313).
19. Check for Pending or Confirmed DTCs with the HDS.

Is DTC P2252 and/or P2255 indicated?*

YES—Check for poor connections or loose terminals at the A/F sensor (Sensor 1) and the PCM, then go to step 1.

NO—Go to step 20.

(cont'd)

DTC Troubleshooting (cont'd)

20. Monitor the OBD STATUS for DTC P2252 and/or P2255* in the DTCs MENU with the HDS.

    Does the screen indicate PASSED?

    YES—Troubleshooting is complete. If any other Pending or Confirmed DTCs were indicated in step 19, go to the indicated DTC's troubleshooting. ■

    NO—If the screen indicates FAILED, check for poor connections or loose terminals at the A/F sensor (Sensor 1) and the PCM, then go to step 1. If the screen indicates NOT COMPLETED, keep idling until a result comes on.

21. Turn the ignition switch to LOCK (0).

22. Reconnect all connectors.

23. Update the PCM if it does not have the latest software (see page 11-230), or substitute a known-good PCM (see page 11-7).

24. Start the engine, and let it idle.

25. Check for Pending or Confirmed DTCs with the HDS.

    Is DTC P2252 and/or P2255 indicated?*

    YES—Check for poor connections or loose terminals at the A/F sensor (Sensor 1) and the PCM, then go to step 1.

    NO—Go to step 26.

26. Monitor the OBD STATUS for DTC P2252 and/or P2255* in the DTCs MENU with the HDS.

    Does the screen indicate PASSED?

    YES—If the PCM was updated, troubleshooting is complete. If the PCM was substituted, replace the original PCM (see page 11-232). If any other Pending or Confirmed DTCs were indicated in step 25, go to the indicated DTC's troubleshooting. ■

    NO—If the screen indicates FAILED, check for poor connections or loose terminals at the A/F sensor (Sensor 1) and the PCM. If the PCM was updated, substitute a known-good PCM (see page 11-7), then go to step 24. If the PCM was substituted, go to step 1. If the screen indicates NOT COMPLETED, keep idling until a result comes on.

DTC P2610: PCM Internal Power Off Timer Malfunction

NOTE: Before you troubleshoot, record all freeze data and any on-board snapshot, and review the general troubleshooting information (see page 11-3).

1. Turn the ignition switch to ON (II).

2. Clear the DTC with the HDS.

3. Check for Pending or Confirmed DTCs with the HDS.

    Is DTC P2610 indicated?

    YES—Go to step 4.

    NO—Intermittent failure, the system is OK at this time. If any other Pending or Confirmed DTCs are indicated, go to the indicated DTC's troubleshooting. ■

4. Update the PCM if it does not have the latest software (see page 11-230), or substitute a known-good PCM (see page 11-7).

5. Check for Pending or Confirmed DTCs with the HDS.

    Is DTC P2610 indicated?

    YES—If the PCM was updated, substitute a known-good PCM (see page 11-7), then recheck. If the PCM was substituted, go to step 1.

    NO—If the PCM was updated, troubleshooting is complete. If the PCM was substituted, replace the original PCM (see page 11-232). If any other Pending or Confirmed DTCs are indicated, go to the indicated DTC's troubleshooting. ■

DTC P2A00: Rear A/F Sensor (Bank 1, Sensor 1) Circuit Range/Performance Problem

DTC P2A03: Front A/F Sensor (Bank 2, Sensor 1) Circuit Range/Performance Problem

NOTE:
- Before you troubleshoot, record all freeze data and any on-board snapshot, and review the general troubleshooting information (see page 11-3).
- Information marked with an asterisk (*) applies to the front bank (Bank 2).

1. Turn the ignition switch to ON (II).
2. Clear the DTC with the HDS.
3. Start the engine. Hold the engine speed at 3,000 rpm without load (in P or N) until the radiator fan comes on, then let it idle.
4. Test-drive under these conditions:
   - Engine coolant temperature (ECT SENSOR 1) above 158 °F (70 °C)
   - Transmission in D
   - Vehicle speed between 25—55 mph (40—88 km/h) for 5 minutes
   - Drive at a steady speed between 55—75 mph (88—120 km/h) for 10 seconds, then decelerate (with the throttle fully closed) for 6 seconds
5. Monitor the OBD STATUS for DTC P2A00 and/or P2A03* in the DTCs MENU with the HDS.

   Does the screen indicate FAILED?

   YES—Go to step 6.

   NO—If the screen indicates PASSED, intermittent failure, the system is OK at this time. Check for poor connections or loose terminals at the A/F sensor (Sensor 1) and the PCM. If the screen indicates EXECUTING, keep driving until a result comes on. If the screen indicates OUT OF CONDITION, go to step 3 and recheck.
6. Turn the ignition switch to LOCK (0).
7. Replace the A/F sensor (Sensor 1) (see page 11-227).
8. Turn the ignition switch to ON (II).
9. Reset the PCM with the HDS.
10. Do the PCM idle learn procedure (see page 11-313).
11. Test-drive under these conditions:
    - Engine coolant temperature (ECT SENSOR 1) above 158 °F (70 °C)
    - Transmission in D
    - Vehicle speed between 25—55 mph (40—88 km/h) for 5 minutes
    - Drive at a steady speed between 55—75 mph (88—120 km/h) for 10 seconds, then decelerate (with the throttle fully closed) for 6 seconds
12. Check for Pending or Confirmed DTCs with the HDS.

    Is DTC P2A00 and/or P2A03 indicated?*

    YES—Check for poor connections or loose terminals at the A/F sensor (Sensor 1) and the PCM, then go to step 1.

    NO—Go to step 13.
13. Monitor the OBD STATUS for DTC P2A00 and/or P2A03* in the DTCs MENU with the HDS.

    Does the screen indicate PASSED?

    YES—Troubleshooting is complete. If any other Pending or Confirmed DTCs were indicated in step 12, go to the indicated DTC's troubleshooting. ■

    NO—If the screen indicates FAILED, check for poor connections or loose terminals at the A/F sensor (Sensor 1) and the PCM, then go to step 1. If the screen indicates EXECUTING, keep driving until a result comes on. If the screen indicates OUT OF CONDITION, go to step 11.

DTC Troubleshooting (cont'd)

DTC U0073: F-CAN Malfunction (BUS-OFF)

NOTE: Before you troubleshoot, record all freeze data and any on-board snapshot, and review the general troubleshooting information (see page 11-3).

1. Turn the ignition switch to ON (II).
2. Clear the DTC with the HDS.
3. Check for Pending or Confirmed DTCs with the HDS.

   Is DTC U0073 indicated?

   YES—Go to step 4.

   NO—Intermittent failure, the system is OK at this time. ■
4. Update the PCM if it does not have the latest software (see page 11-230), or substitute a known-good PCM (see page 11-7).
5. Check for Pending or Confirmed DTCs with the HDS.

   Is DTC U0073 indicated?

   YES—If the PCM was updated, substitute a known-good PCM (see page 11-7), then recheck. If the PCM was substituted, go to step 1.

   NO—If the PCM was updated, troubleshooting is complete. If the PCM was substituted, replace the original PCM (see page 11-232). If any other Pending or Confirmed DTCs are indicated, go to the indicated DTC's troubleshooting. ■

DTC U0114: F-CAN Malfunction (PCM-SH-AWD Control Unit)

NOTE: Before you troubleshoot, record all freeze data and any on-board snapshot, and review the general troubleshooting information (see page 11-3).

1. Turn the ignition switch to ON (II).
2. Check for Pending or Confirmed DTCs with the HDS.

   Are DTC U0073 and U0114 indicated at the same time?

   YES—Go to the troubleshooting for DTC U0073 (see page 11-186). ■

   NO—Go to step 3.
3. Clear the DTC with the HDS.
4. Check for Pending or Confirmed DTCs with the HDS.

   Is DTC U0114 indicated?

   YES—Go to step 5.

   NO—Intermittent failure, the system is OK at this time. Check for poor connections or loose terminals at the SH-AWD control unit and the PCM. ■
5. Check for communication to the SH-AWD system with the HDS.

   Does the HDS communicate with the SH-AWD control unit?

   YES—Go to step 6.

   NO—Go to the DLC circuit troubleshooting (see page 11-211). ■
6. Turn the ignition switch to LOCK (0).
7. Jump the SCS line with the HDS.
8. Disconnect SH-AWD control unit connector A (26P).
9. Disconnect PCM connector E (31P).

10. Check for continuity between PCM connector terminal E15 and SH-AWD control unit connector A (26P) terminal No. 11.

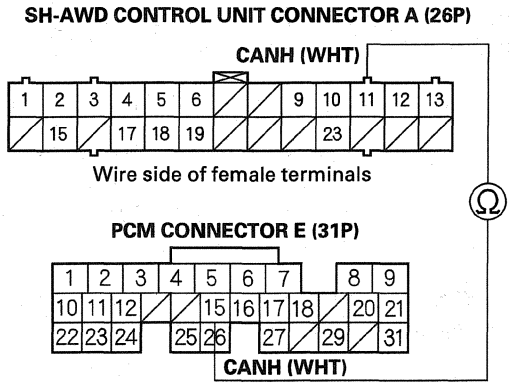

Is there continuity?

YES—Go to step 11.

NO—Repair open in the wire between the PCM (E15) and the SH-AWD control unit, then go to step 12.

11. Check for continuity between PCM connector terminal E26 and SH-AWD control unit connector A (26P) terminal No. 10.

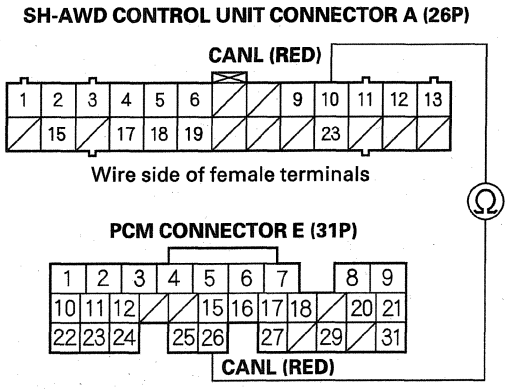

Is there continuity?

YES—Substitute a known-good SH-AWD control unit (see page 15-99), then go to step 12 and recheck. If DTC U0114 is not indicated after substitution, replace the original SH-AWD control unit (see page 15-99), then go to step 12.

NO—Repair open in the wire between the PCM (E26) and the SH-AWD control unit, then go to step 12.

(cont'd)

DTC Troubleshooting (cont'd)

12. Reconnect all connectors.
13. Turn the ignition switch to ON (II).
14. Reset the PCM with the HDS.
15. Do the PCM idle learn procedure (see page 11-313).
16. Check for Pending or Confirmed DTCs with the HDS.

    Is DTC U0114 indicated?

    YES—Check for poor connections or loose terminals at the SH-AWD control unit and the PCM, then go to step 1.

    NO—Troubleshooting is complete. If any other Pending or Confirmed DTCs are indicated, go to the indicated DTC's troubleshooting. ■

DTC U0122: F-CAN Malfunction (PCM-VSA Modulator-Control Unit)

NOTE: Before you troubleshoot, record all freeze data and any on-board snapshot, and review the general troubleshooting information (see page 11-3).

1. Turn the ignition switch to ON (II).
2. Check for Pending or Confirmed DTCs with the HDS.

   Are DTC U0073 and U0122 indicated at the same time?

   YES—Go to the troubleshooting for DTC U0073 (see page 11-186). ■

   NO—Go to step 3.
3. Clear the DTC with the HDS.
4. Check for Pending or Confirmed DTCs with the HDS.

   Is DTC U0122 indicated?

   YES—Go to step 5.

   NO—Intermittent failure, the system is OK at this time. Check for poor connections or loose terminals at the VSA modulator-control unit and the PCM. ■
5. Check for communication to the VSA system with the HDS.

   Does the HDS communicate with the VSA modulator-control unit?

   YES—Go to step 6.

   NO—Go to the DLC circuit troubleshooting (see page 11-211). ■

6. Turn the ignition switch to LOCK (0).

7. Jump the SCS line with the HDS.

8. Disconnect the VSA modulator-control unit 47P connector.

9. Disconnect PCM connector E (31P).

10. Check for continuity between PCM connector terminal E15 and VSA modulator-control unit 47P connector terminal No. 14.

VSA MODULATOR-CONTROL UNIT 47P CONNECTOR

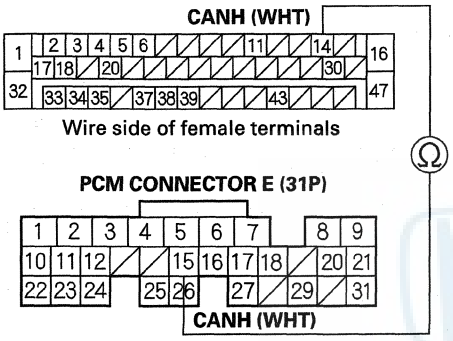

Is there continuity?

YES—Go to step 11.

NO—Repair open in the wire between the PCM (E15) and the VSA modulator-control unit, then go to step 12.

11. Check for continuity between PCM connector terminal E26 and VSA modulator-control unit 47P connector terminal No. 30.

VSA MODULATOR-CONTROL UNIT 47P CONNECTOR

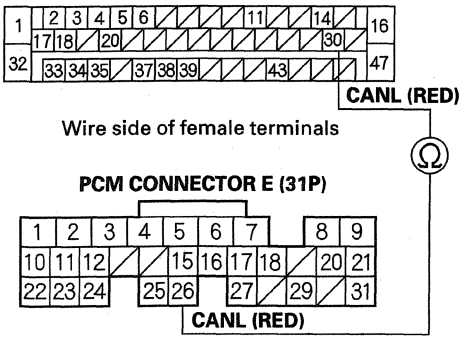

Is there continuity?

YES—Substitute a known-good VSA modulator-control unit (see page 19-105), then go to step 12 and recheck. If DTC U0122 is not indicated after substitution, replace the original VSA modulator-control unit (see page 19-105), then go to step 12.

NO—Repair open in the wire between the PCM (E26) and the VSA modulator-control unit, then go to step 12.

(cont'd)

DTC Troubleshooting (cont'd)

12. Reconnect all connectors.
13. Turn the ignition switch to ON (II).
14. Reset the PCM with the HDS.
15. Do the PCM idle learn procedure (see page 11-313).
16. Check for Pending or Confirmed DTCs with the HDS.

    Is DTC U0122 indicated?

    YES—Check for poor connections or loose terminals at the VSA modulator-control unit and the PCM, then go to step 1.

    NO—Troubleshooting is complete. If any other Pending or Confirmed DTCs are indicated, go to the indicated DTC's troubleshooting. ■

DTC U0155: F-CAN Malfunction (PCM-Gauge Control Module)

NOTE: Before you troubleshoot, record all freeze data and any on-board snapshot, and review the general troubleshooting information (see page 11-3).

1. Turn the ignition switch to ON (II).
2. Clear the DTC with the HDS.
3. Check for Pending or Confirmed DTCs with the HDS.

   Is DTC U0155 indicated?

   YES—Go to step 4.

   NO—Intermittent failure, the system is OK at this time. Check for poor connections or loose terminals at the gauge control module and the PCM. ■
4. Check for body electrical DTCs in the DTCs MENU with the HDS.

   Is DTC B1168, B1169, and/or B1178 indicated?

   YES—Go to step 5.

   NO—Do the gauge control module input test (see page 22-155). ■
5. Turn the ignition switch to LOCK (0).
6. Jump the SCS line with the HDS.
7. Remove the gauge control module (see page 22-419), and disconnect the gauge control module connector B (28P).
8. Disconnect PCM connector E (31P).

9. Check for continuity between PCM connector terminal E15 and gauge control module connector B (28P) terminal No. 16.

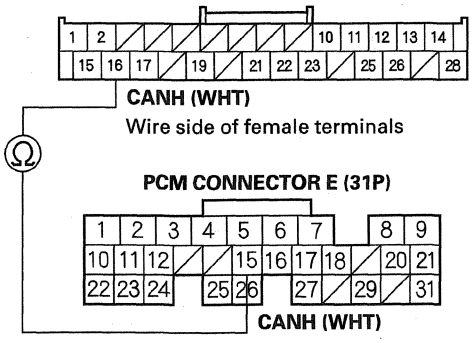

Is there continuity?

YES—Go to step 10.

NO—Repair open in the wire between the PCM (E15) and the gauge control module, then go to step 11.

10. Check for continuity between PCM connector terminal E26 and gauge control module connector B (28P) terminal No. 15.

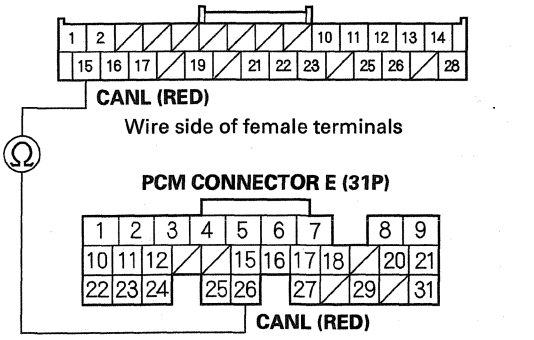

Is there continuity?

YES—Substitute a known-good gauge control module (see page 22-419), then go to step 11 and recheck. If DTC U0155 is not indicated after substitution, replace the original gauge control module (see page 22-419), then go to step 11.

NO—Repair open in the wire between the PCM (E26) and the gauge control module, then go to step 11.

(cont'd)

DTC Troubleshooting (cont'd)

11. Reconnect all connectors.
12. Turn the ignition switch to ON (II).
13. Reset the PCM with the HDS.
14. Do the PCM idle learn procedure (see page 11-313).
15. Check for Pending or Confirmed DTCs with the HDS.

    Is DTC U0155 indicated?

    YES—Check for poor connections or loose terminals at the gauge control module and the PCM, then go to step 1.

    NO—Troubleshooting is complete. If any other Pending or Confirmed DTCs are indicated, go to the indicated DTC's troubleshooting. ■

F-CAN Circuit Troubleshooting

1. Turn the ignition switch to LOCK (0).
2. Jump the SCS line with the HDS.
3. Disconnect PCM connector E (31P).
4. Measure the resistance between PCM connector terminals E15 and E26.

PCM CONNECTOR E (31P)

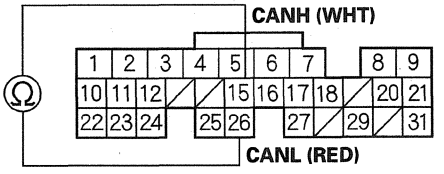

Wire side of female terminals

Is there about 85— 103 Ω ?

YES—Go to step 55.

NO—Go to step 5.

5. Disconnect these connectors:

   - Gauge control module connector B (28P) (see page 22-419).
   - VSA modulator-control unit 47P connector (see page 19-105).
   - E-pretensioner unit connector B (14P) (if equipped) (see page 24-221).
   - ACC (adaptive cruise control) unit 20P connector (if equipped) (see page 25-86).
   - Steering angle sensor 5P connector (see page 19-102).
   - TPMS control unit connector B (20P) (see page 18-88).
   - Navigation unit connector B (32P) (see page 23-255).
   - AcuraLink control unit (XM receiver) connector A (32P) (if equipped) (see page 23-111).
   - SH-AWD control unit connector A (26P) (see page 15-99).

6. Check for continuity between PCM connector terminals E15 and E26.

PCM CONNECTOR E (31P)

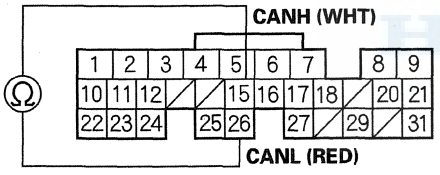

Wire side of female terminals

Is there continuity?

YES—Repair short in the wire between PCM connector terminals E15 and E26. ■

NO—Go to step 7.

7. Check for continuity between PCM connector terminal E15 and gauge control module connector B (28P) terminal No. 16.

GAUGE CONTROL MODULE CONNECTOR B (28P)

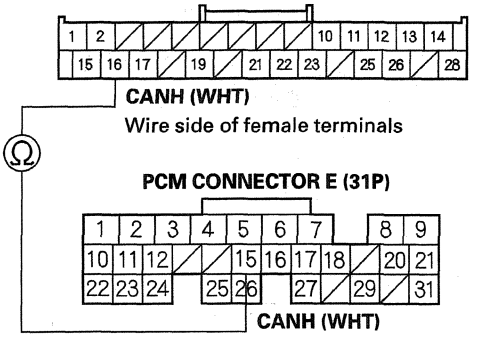

Wire side of female terminals

Is there continuity?

YES—Go to step 8.

NO—Repair open in the wire between the PCM (E15) and the gauge control module. ■

(cont'd)

F-CAN Circuit Troubleshooting (cont'd)

8. Check for continuity between PCM connector terminal E15 and VSA modulator-control unit 47P connector terminal No. 14.

VSA MODULATOR-CONTROL UNIT 47P CONNECTOR

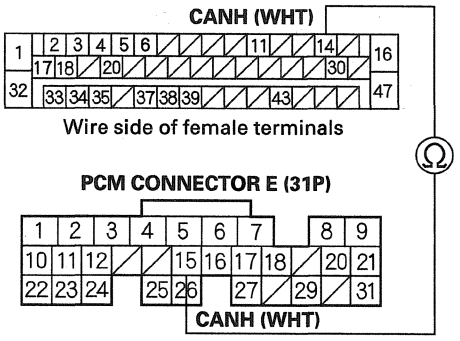

Is there continuity?

YES—Go to step 9.

NO—Repair open in the wire between the PCM (E15) and the VSA modulator-control unit. ■

9. Check for continuity between PCM connector terminal E15 and SH-AWD control unit connector A (26P) terminal No. 11.

SH-AWD CONTROL UNIT CONNECTOR A (26P)

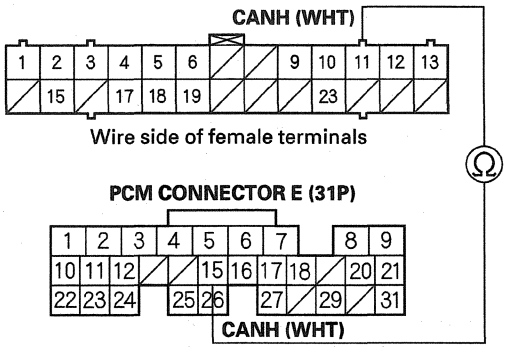

Is there continuity?

YES—Go to step 10.

NO—Repair open in the wire between the PCM (E15) and the SH-AWD control unit. ■

10. Check for continuity between PCM connector terminal E15 and steering angle sensor 5P connector terminal No. 4.

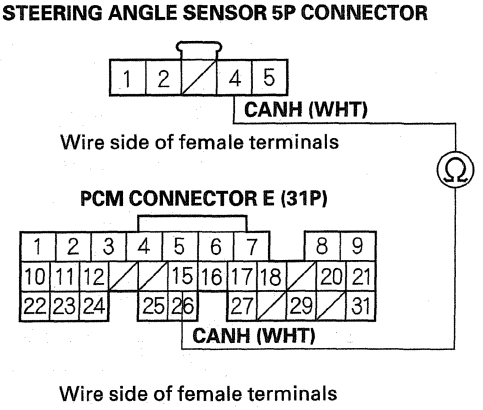

Is there continuity?

YES—Go to step 11.

NO—Repair open in the wire between the PCM (E15) and the steering angle sensor. ■

11. Check for continuity between PCM connector terminal E15 and TPMS control unit connector B (20P) terminal No. 19.

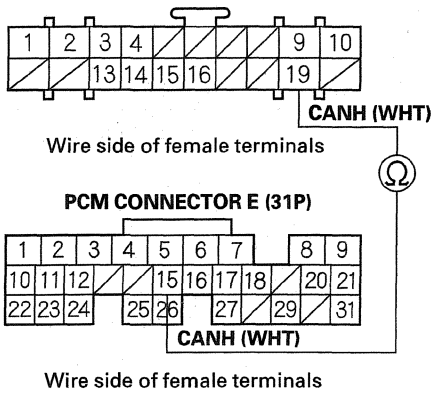

Is there continuity?

YES—Go to step 12.

NO—Repair open in the wire between the PCM (E15) and the TPMS control unit. ■

(cont'd)

F-CAN Circuit Troubleshooting (cont'd)

12. Check for continuity between PCM connector terminal E15 and navigation unit connector B (32P) terminal No. 8.

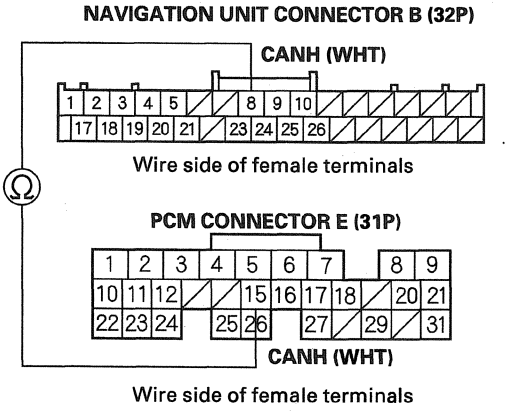

Is there continuity?

YES—
- With ACC (adaptive cruise control): Go to step 13.
- With AcuraLink, without ACC: Go to step 15.
- Without ACC, without AcuraLink: Go to step 16.

NO—Repair open in the wire between the PCM (E15) and the navigation unit. ■

13. Check for continuity between PCM connector terminal E15 and ACC unit 20P connector terminal No. 10.

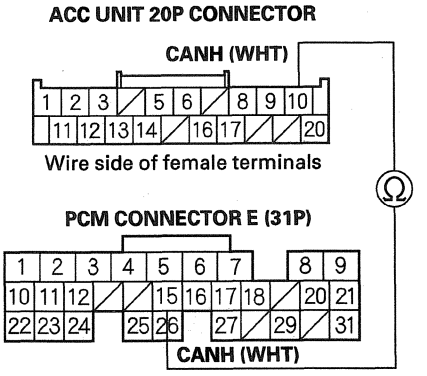

Is there continuity?

YES—Go to step 14.

NO—Repair open in the wire between the PCM (E15) and the ACC unit. ■

14. Check for continuity between PCM connector terminal E15 and e-pretensioner unit connector B (14P) terminal No. 3.

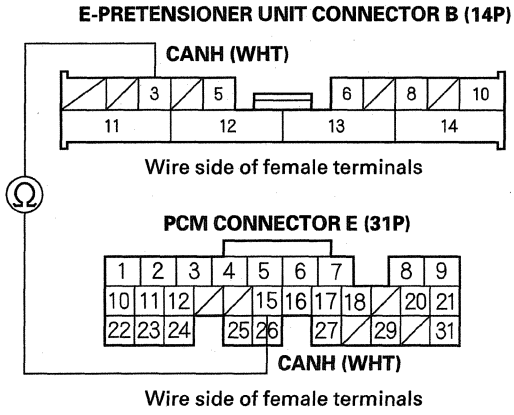

Is there continuity?

YES—
- With AcuraLink: Go to step 15.
- Without AcuraLink: Go to step 16.

NO—Repair open in the wire between the PCM (E15) and the e-pretensioner unit. ■

15. Check for continuity between PCM connector terminal E15 and AcuraLink control unit (XM receiver) connector A (32P) terminal No. 7.

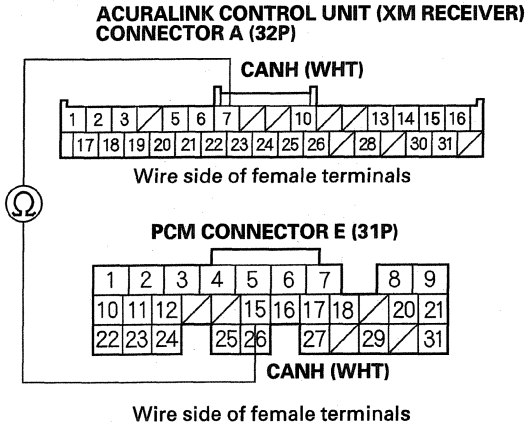

Is there continuity?

YES—Go to step 16.

NO—Repair open in the wire between the PCM (E15) and the AcuraLink control unit (XM receiver). ■

(cont'd)

F-CAN Circuit Troubleshooting (cont'd)

16. Check for continuity between PCM connector terminal E26 and gauge control module connector B (28P) terminal No. 15.

GAUGE CONTROL MODULE CONNECTOR B (28P)

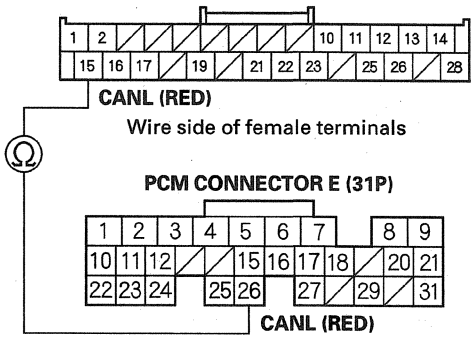

Is there continuity?

YES—Go to step 17.

NO—Repair open in the wire between the PCM (E26) and the gauge control module. ■

17. Check for continuity between PCM connector terminal E26 and VSA modulator-control unit 47P connector terminal No. 30.

VSA MODULATOR-CONTROL UNIT 47P CONNECTOR

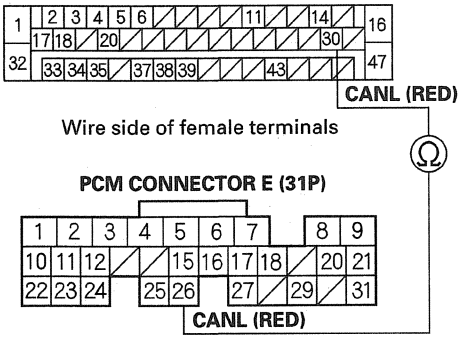

Is there continuity?

YES—Go to step 18.

NO—Repair open in the wire between the PCM (E26) and the VSA modulator-control unit. ■

18. Check for continuity between PCM connector terminal E26 and SH-AWD control unit connector A (26P) terminal No. 10.

SH-AWD CONTROL UNIT CONNECTOR A (26P)

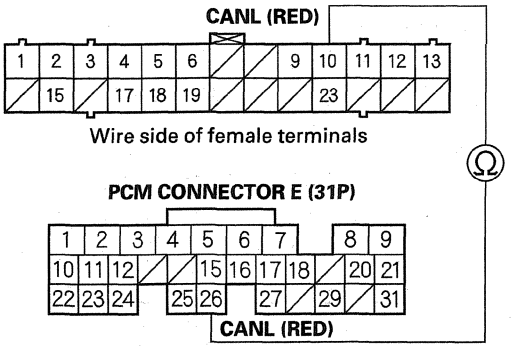

Is there continuity?

YES—Go to step 19.

NO—Repair open in the wire between the PCM (E26) and the SH-AWD control unit. ■

19. Check for continuity between PCM connector terminal E26 and steering angle sensor 5P connector terminal No. 2.

STEERING ANGLE SENSOR 5P CONNECTOR

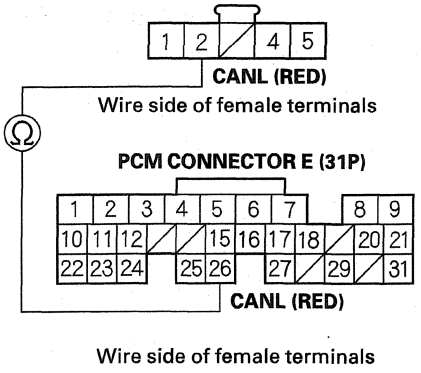

Is there continuity?

YES—Go to step 20.

NO—Repair open in the wire between the PCM (E26) and the steering angle sensor. ■

(cont'd)

F-CAN Circuit Troubleshooting (cont'd)

20. Check for continuity between PCM connector terminal E26 and TPMS control unit connector B (20P) terminal No. 10.

TPMS CONTROL UNIT CONNECTOR B (20P)

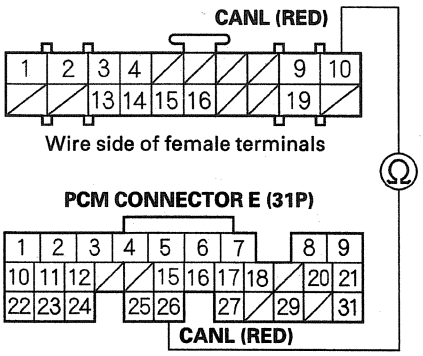

Is there continuity?

YES—Go to step 21.

NO—Repair open in the wire between the PCM (E26) and the TPMS control unit. ■

21. Check for continuity between PCM connector terminal E26 and navigation unit connector B (32P) terminal No. 24.

NAVIGATION UNIT CONNECTOR B (32P)

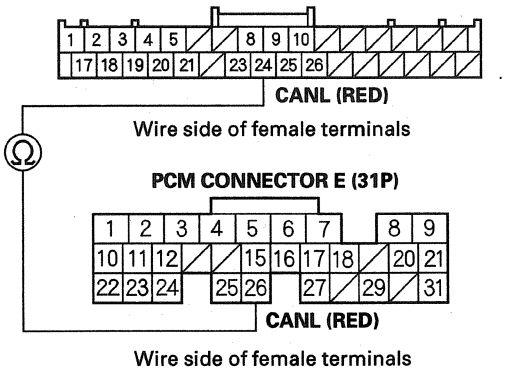

Is there continuity?

YES—
- With ACC (adaptive cruise control): Go to step 22.
- With AcuraLink, without ACC: Go to step 24.
- Without ACC, without AcuraLink: Go to step 25.

NO—Repair open in the wire between the PCM (E26) and the navigation unit. ■

22. Check for continuity between PCM connector terminal E26 and ACC unit 20P connector terminal No. 20.

ACC UNIT 20P CONNECTOR

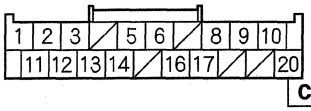

CANL (RED)

Wire side of female terminals



PCM CONNECTOR E (31P)

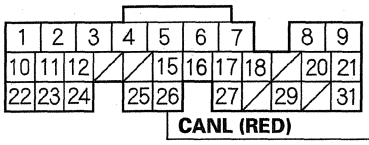

CANL (RED)

Wire side of female terminals

Is there continuity?

YES—Go to step 23.

NO—Repair open in the wire between the PCM (E26) and the ACC unit.■

23. Check for continuity between PCM connector terminal E26 and e-pretensioner unit connector B (14P) terminal No. 5.

E-PRETENSIONER UNIT CONNECTOR B (14P)

CANL (RED)

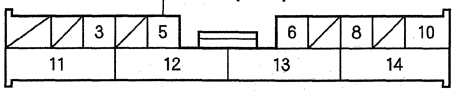

Wire side of female terminals



PCM CONNECTOR E (31P)

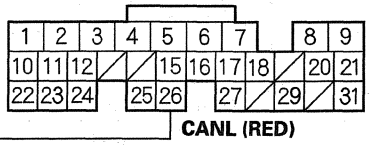

CANL (RED)

Wire side of female terminals

Is there continuity?

YES—
- With AcuraLink: Go to step 24.
- Without AcuraLink: Go to step 25.

NO—Repair open in the wire between the PCM (E26) and the e-pretensioner unit.■

(cont'd)

F-CAN Circuit Troubleshooting (cont'd)

24. Check for continuity between PCM connector terminal E26 and AcuraLink control unit (XM receiver) connector A (32P) terminal No. 6.

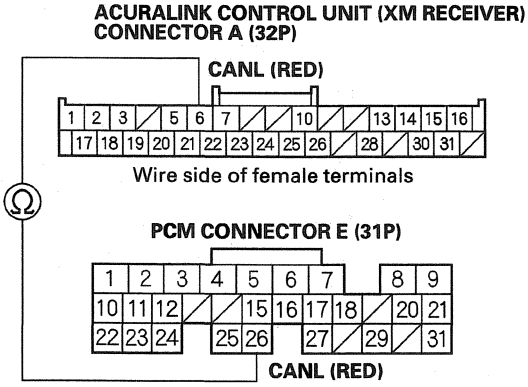

Is there continuity?

YES—Go to step 25.

NO—Repair open in the wire between the PCM (E26) and the AcuraLink control unit (XM receiver). ■

25. Remove the jumper wire from the PCM connector.

26. Reconnect gauge control module connector B (28P).

27. Measure the resistance between PCM connector terminals E15 and E26.

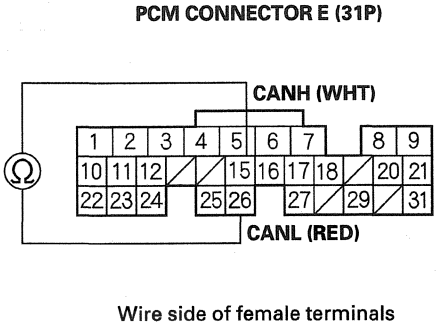

Is there about 2.34—2.86 kΩ?

YES—Go to step 28.

NO—Substitute a known-good gauge control module (see page 22-419), and reconnect PCM connector E. If the HDS identifies the vehicle, replace the original gauge control module (see page 22-419). ■

28. Disconnect gauge control module connector B (28P).

29. Reconnect the VSA modulator-control unit 47P connector.

30. Measure the resistance between PCM connector terminals E15 and E26.

PCM CONNECTOR E (31P)

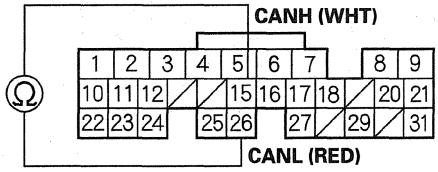

Wire side of female terminals

Is there about 108 – 132 Ω ?

YES—Go to step 31.

NO—Substitute a known-good VSA modulator-control unit (see page 19-105), and reconnect PCM connector E. If the HDS identifies the vehicle, replace the original VSA modulator-control unit (see page 19-105). ■

31. Disconnect the VSA modulator-control unit 47P connector.

32. Reconnect SH-AWD control unit connector A (26P).

33. Measure the resistance between PCM connector terminals E15 and E26.

PCM CONNECTOR E (31P)

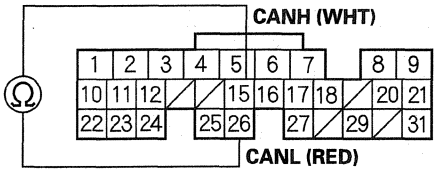

Wire side of female terminals

Is there about 2.34 – 2.86 kΩ ?

YES—Go to step 34.

NO—Substitute a known-good SH-AWD control unit (see page 15-99), and reconnect PCM connector E. If the HDS identifies the vehicle, replace the original SH-AWD control unit (see page 15-99). ■

(cont'd)

F-CAN Circuit Troubleshooting (cont'd)

34. Disconnect SH-AWD control unit connector A (26P).
35. Reconnect the steering angle sensor 5P connector.
36. Measure the resistance between PCM connector terminals E15 and E26.

PCM CONNECTOR E (31P)

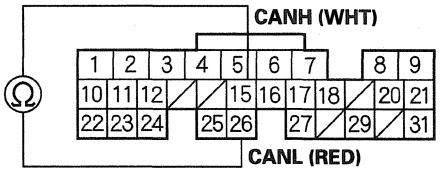

Wire side of female terminals

Is there about 2.34—2.86 kΩ ?

YES—Go to step 37.

NO—Substitute a known-good steering angle sensor (see page 19-102), and reconnect PCM connector E. If the HDS identifies the vehicle, replace the original steering angle sensor (see page 19-102).■

37. Disconnect the steering angle sensor 5P connector.
38. Reconnect TPMS control unit connector B (20P).
39. Measure the resistance between PCM connector terminals E15 and E26.

PCM CONNECTOR E (31P)

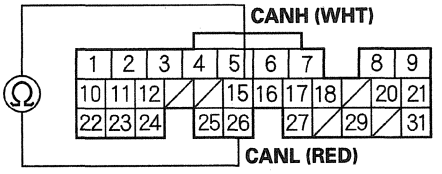

Wire side of female terminals

Is there about 2.34—2.86 kΩ ?

YES—Go to step 40.

NO—Substitute a known-good TPMS control unit (see page 18-88), and reconnect PCM connector E. If the HDS identifies the vehicle, replace the original TPMS control unit (see page 18-88).■

40. Disconnect TPMS control unit connector B (20P).

41. Reconnect navigation unit connector B (32P).

42. Measure the resistance between PCM connector terminals E15 and E26.

PCM CONNECTOR E (31P)

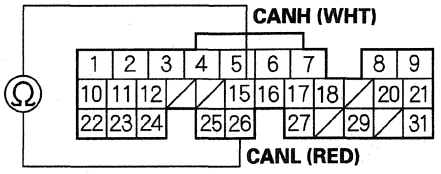

Wire side of female terminals

Is there about 2.34–2.86 kΩ ?

YES—
- With ACC (adaptive cruise control): Go to step 43.
- With AcuraLink, without ACC: Go to step 49.
- Without ACC, without AcuraLink: Update the PCM if it does not have the latest software (see page 11-230), or substitute a known-good PCM (see page 11-7), then recheck. If the HDS identifies the vehicle with a known-good PCM, replace the original PCM (see page 11-232). ■

NO—Substitute a known-good navigation unit (see page 23-255), and reconnect PCM connector E. If the HDS identifies the vehicle, replace the original navigation unit (see page 23-255). ■

43. Disconnect navigation unit connector B (32P).

44. Reconnect the ACC unit 20P connector.

45. Measure the resistance between PCM connector terminals E15 and E26.

PCM CONNECTOR E (31P)

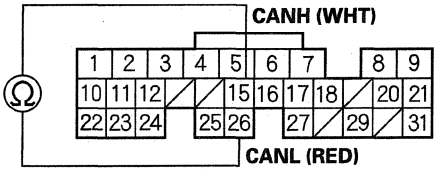

Wire side of female terminals

Is there about 2.34–2.86 kΩ ?

YES—Go to step 46.

NO—Substitute a known-good ACC unit (see page 25-86), then reconnect PCM connector E. If the HDS identifies the vehicle, replace the original ACC unit (see page 25-86). ■

(cont'd)

F-CAN Circuit Troubleshooting (cont'd)

46. Disconnect the ACC unit 20P connector.
47. Reconnect e-pretensioner unit connector B (14P).
48. Measure the resistance between PCM connector terminals E15 and E26.

PCM CONNECTOR E (31P)

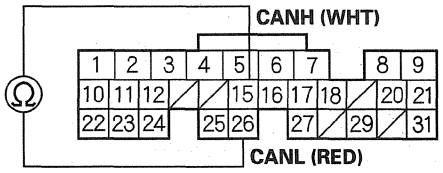

Wire side of female terminals

Is there about 2.34—2.86 kΩ ?

YES—
- With AcuraLink: Go to step 49.
- Without AcuraLink: Update the PCM if it does not have the latest software (see page 11-230), or substitute a known-good PCM (see page 11-7), then recheck. If the HDS identifies the vehicle with a known-good PCM, replace the original PCM (see page 11-232). ■

NO—Substitute a known-good e-pretensioner unit (see page 24-221), then reconnect PCM connector E. If the HDS identifies the vehicle, replace the original e-pretensioner unit (see page 24-221). ■

49. Disconnect e-pretensioner unit connector B (14P).
50. Reconnect AcuraLink control unit (XM receiver) connector A (32P).
51. Measure the resistance between PCM connector terminals E15 and E26.

PCM CONNECTOR E (31P)

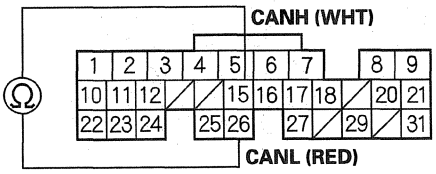

Wire side of female terminals

Is there about 2.34—2.86 kΩ ?

YES—Update the PCM if it does not have the latest software (see page 11-230), or substitute a known-good PCM (see page 11-7), then recheck. If the HDS identifies the vehicle with a known-good PCM, replace the original PCM (see page 11-232). ■

NO—Substitute a known-good AcuraLink control unit (XM receiver) (see page 23-111), then reconnect PCM connector E. If the HDS identifies the vehicle, replace the original AcuraLink control unit (XM receiver) (see page 23-111). ■

52. Disconnect these connectors:

- Gauge control module connector B (28P) (see page 22-419).
- VSA modulator-control unit 47P connector (see page 19-105).
- E-pretensioner unit connector B (14P) (if equipped) (see page 24-221).
- ACC (adaptive cruise control) unit 20P connector (if equipped) (see page 25-86).
- Steering angle sensor 5P connector (see page 19-102).
- TPMS control unit connector B (20P) (see page 18-88).
- Navigation unit connector B (32P) (see page 23-255).
- AcuraLink control unit (XM receiver) connector A (32P) (if equipped) (see page 23-111).
- SH-AWD control unit connector A (26P) (see page 15-99).

53. Check for continuity between PCM connector terminal E15 and body ground.

PCM CONNECTOR E (31P)

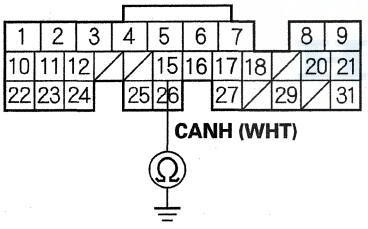

Wire side of female terminals

Is there continuity?

YES—Repair short in the wire between the PCM (E15) and the gauge control module, the VSA modulator-control unit, the SH-AWD control unit, the ACC unit, the e-pretensioner unit, the AcuraLink control unit (XM receiver), the steering angle sensor, the TPMS control unit, the navigation unit, or the DLC. ■

NO—Go to step 54.

54. Check for continuity between PCM connector terminal E26 and body ground.

PCM CONNECTOR E (31P)

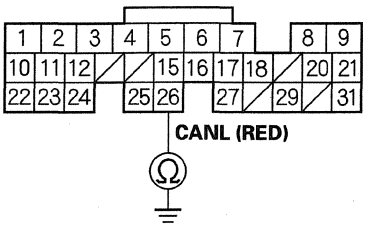

Wire side of female terminals

Is there continuity?

YES—Repair short in the wire between the PCM (E26) and the gauge control module, the VSA modulator-control unit, the SH-AWD control unit, the ACC unit, the e-pretensioner unit, the AcuraLink control unit (XM receiver), the steering angle sensor, the TPMS control unit, the navigation unit, or the DLC. ■

NO—Go to step 55.

(cont'd)

F-CAN Circuit Troubleshooting (cont'd)

55. Reconnect all connectors.

56. Connect the HDS to the DLC (see page 11-3).

57. Disconnect gauge control module connector B (28P).

58. Turn the ignition switch to ON (II), and read the HDS.

    Does the HDS identify the vehicle?

    YES—Replace the gauge control module (see page 22-419). ■

    NO—Go to step 59.

59. Turn the ignition switch to LOCK (0).

60. Reconnect gauge control module connector B (28P).

61. Disconnect the VSA modulator-control unit 47P connector.

62. Turn the ignition switch to ON (II), and read the HDS.

    Does the HDS identify the vehicle?

    YES—Replace the VSA modulator-control unit (see page 19-105). ■

    NO—Go to step 63.

63. Turn the ignition switch to LOCK (0).

64. Reconnect the VSA modulator-control unit 47P connector.

65. Disconnect SH-AWD control unit connector A (26P).

66. Turn the ignition switch to ON (II), and read the HDS.

    Does the HDS identify the vehicle?

    YES—Replace the SH-AWD control unit (see page 15-99). ■

    NO—Go to step 67.

67. Turn the ignition switch to LOCK (0).

68. Reconnect SH-AWD control unit connector A (26P).

69. Disconnect the steering angle sensor 5P connector.

70. Turn the ignition switch to ON (II), and read the HDS.

    Does the HDS identify the vehicle?

    YES—Replace the steering angle sensor (see page 19-102). ■

    NO—Go to step 71.

71. Turn the ignition switch to LOCK (0).

72. Reconnect the steering angle sensor 5P connector.

73. Disconnect TPMS control unit connector B (20P).

74. Turn the ignition switch to ON (II), and read the HDS.

    Does the HDS identify the vehicle?

    YES—Replace the TPMS control unit (see page 18-88). ■

    NO—Go to step 75.

75. Turn the ignition switch to LOCK (0).

76. Reconnect TPMS control unit connector B (20P).

77. Disconnect navigation unit connector B (32P).

78. Turn the ignition switch to ON (II), and read the HDS.

    Does the HDS identify the vehicle?

    YES—Replace the navigation unit (see page 23-255). ■

    NO—
    - With ACC (adaptive cruise control): Go to step 79.
    - With AcuraLink, without ACC: Go to step 83.
    - Without ACC, without AcuraLink: Update the PCM if it does not have the latest software (see page 11-230), or substitute a known-good PCM (see page 11-7), then recheck. If the HDS identifies the vehicle with a known-good PCM, replace the original PCM (see page 11-232). ■

79. Turn the ignition switch to LOCK (0).

80. Reconnect navigation unit connector B (32P).

81. Disconnect the ACC unit 20P connector.

82. Turn the ignition switch to ON (II), and read the HDS.

    Does the HDS identify the vehicle?

    YES—Replace the ACC unit (see page 25-86). ■

    NO—Go to step 83.

83. Turn the ignition switch to LOCK (0).

84. Reconnect the ACC unit 20P connector.

85. Disconnect e-pretensioner unit connector B (14P).

86. Turn the ignition switch to ON (II), and read the HDS.

    Does the HDS identify the vehicle?

    YES—Replace the e-pretensioner unit (see page 24-221). ■

    NO—
    - With AcuraLink: Go to step 87.
    - Without AcuraLink: Update the PCM if it does not have the latest software (see page 11-230), or substitute a known-good PCM (see page 11-7), then recheck. If the HDS identifies the vehicle with a known-good PCM, replace the original PCM (see page 11-232). ■

87. Turn the ignition switch to LOCK (0).

88. Reconnect e-pretensioner unit connector B (14P).

89. Disconnect AcuraLink control unit (XM receiver) connector A (32P).

90. Turn the ignition switch to ON (II), and read the HDS.

    Does the HDS identify the vehicle?

    YES—Replace the AcuraLink control unit (XM receiver) (see page 23-111). ■

    NO—Update the PCM if it does not have the latest software (see page 11-230), or substitute a known-good PCM (see page 11-7), then recheck. If the HDS identifies the vehicle with a known-good PCM, replace the original PCM (see page 11-232). ■

MIL Circuit Troubleshooting

1. Turn the ignition switch to ON (II).
2. Do the gauge self-diagnostic function (see page 22-396).

   Does the MIL indicator flash?

   YES—Go to step 3.

   NO—Substitute a known-good gauge control module, and recheck. If the symptom/indication goes away with a known-good gauge control module, replace the original gauge control module (see page 22-419). ■
3. Connect the HDS to the DLC (see page 11-3).
4. Check the SCS in the DATA LIST with the HDS.

   Is a short indicated?

   YES—Go to step 5.

   NO—Update the PCM if it does not have the latest software (see page 11-230), or substitute a known-good PCM (see page 11-7), then recheck. If the symptom/indication goes away with a known-good PCM, replace the original PCM (see page 11-232). ■
5. Turn the ignition switch to LOCK (0).
6. Disconnect PCM connector E (31P), then disconnect the HDS.
7. Check for continuity between PCM connector terminal E16 and body ground.

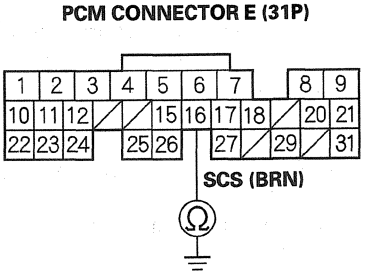

Wire side of female terminals

Is there continuity?

YES—Repair short in the wire between the PCM (E16) and the DLC. ■

NO—Update the PCM if it does not have the latest software (see page 11-230), or substitute a known-good PCM (see page 11-7), then recheck. If the symptom/indication goes away with a known-good PCM, replace the original PCM (see page 11-232). ■

DLC Circuit Troubleshooting

NOTE: If you suspect the HDS or the HDS DLC cable may be the source of the communication problem, verify that they are working properly by connecting them to a known-good, like vehicle and system, and checking for communication problems.

1. Turn the ignition switch to LOCK (0).
2. Connect the HDS to the DLC (see page 11-3).
3. Turn the ignition switch to ON (II), and read the HDS.

   Does the HDS identify the vehicle?

   YES—Go to step 4.

   NO—Go to step 25.
4. Check for Pending or Confirmed DTCs in the PGM-FI system with the HDS.

   Are any Pending or Confirmed DTCs indicated?

   YES—Go to the indicated DTC's troubleshooting. ■

   NO—
   - If the HDS does not communicate with the SRS, go to step 5.
   - If the HDS does not communicate with the VSA system, go to step 7.
   - If the HDS does not communicate with the TPMS, go to step 9.
   - If the HDS does not communicate with the SH-AWD system, go to step 11.
   - If the HDS does not communicate with the ACC system, go to step 13.
   - If the HDS does not communicate with the IMMOBI (immobilizer) system, go to step 15.
   - If the HDS does not communicate with the BODY ELECTRICAL system, go to step 17.
5. Turn the ignition switch to LOCK (0).
6. Turn the ignition switch to ON (II), and watch the SRS indicator.

   Does the SRS indicator stay on?

   YES—Go to the SRS general troubleshooting information (see page 24-23). ■

   NO—Go to step 19.
7. Turn the ignition switch to LOCK (0).
8. Turn the ignition switch to ON (II), and watch the VSA indicator.

   Does the VSA indicator stay on?

   YES—Go to the VSA system's general troubleshooting information (see page 19-46). ■

   NO—Go to step 19.
9. Turn the ignition switch to LOCK (0).
10. Turn the ignition switch to ON (II), and watch the TPMS indicator.

    Does the TPMS indicator stay on?

    YES—Go to the TPMS general troubleshooting information (see page 18-47). ■

    NO—Go to step 19.
11. Turn the ignition switch to LOCK (0).
12. Turn the ignition switch to ON (II), and watch the SH-AWD indicator.

    Does the SH-AWD indicator stay on?

    YES—Go to the SH-AWD general troubleshooting information (see page 15-4). ■

    NO—Go to step 19.

(cont'd)

DLC Circuit Troubleshooting (cont'd)

13. Turn the ignition switch to LOCK (0).

14. Turn the ignition switch to ON (II), and watch the ACC indicator.

    Does the ACC indicator stay on?

    YES—Go to the ACC general troubleshooting information (see page 25-5). ■

    NO—Go to step 19.

15. Turn the ignition switch to LOCK (0).

16. Turn the ignition switch to ON (II), and watch the immobilizer indicator.

    Does the immobilizer indicator stay on or flash?

    YES—Go to the immobilizer system's troubleshooting (see page 22-498). ■

    NO—Go to step 19.

17. Do the gauge self-diagnostic function (see page 22-396).

18. Check the gauge display.

    Is Error 2 indicated?

    YES—Check for B-CAN system DTCs (see page 22-103). ■

    NO—Go to step 19.

19. Turn the ignition switch to LOCK (0) then do the battery terminal disconnection procedure (see page 22-91), and wait at least 3 minutes before starting work.

20. Disconnect the HDS from the DLC.

21. Check for continuity between body ground and DLC terminals No. 1 and No. 7 individually.

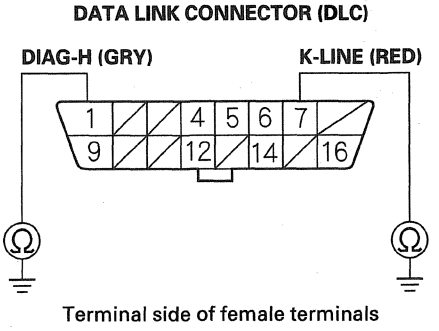

Terminal side of female terminals

    Is there continuity?

    YES—Go to step 22.

    NO—Go to step 23.

22. Continue to check for continuity between body ground and DLC terminals No. 1 and No. 7 individually, while disconnecting these connectors, one at a time:

    - SRS unit connector A (28P)
    - VSA modulator-control unit 47P connector
    - TPMS control unit connector B (20P)
    - Immobilizer-keyless control unit 7P connector
    - SH-AWD control unit connector A (26P)
    - ACC (adaptive cruise control) unit 20P connector
    - Driver's under-dash fuse/relay box connector P (30P)
    - Keyless access control unit connector A (31P)

    Does continuity go away when one of the above connectors is disconnected?

    YES—Replace the part that caused an open when it was disconnected. ■

    NO—Repair short in the wire between the DLC No. 7 (K-line) and the VSA modulator-control unit, the SRS unit, the TPMS control unit, the immobilizer-keyless control unit, the SH-AWD control unit, the ACC unit, and the driver's under-dash fuse/relay box, or between the DLC No. 1 (DIAG-H line) and the immobilizer control unit, or the keyless access control unit. ■

23. Connect DLC terminals No. 1 and No. 7 to body ground with a jumper wire.

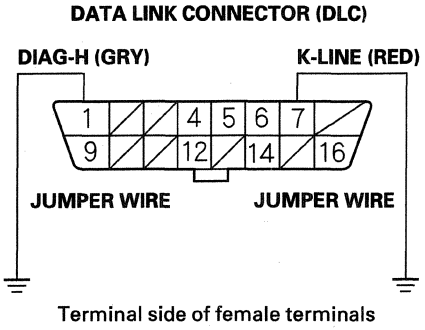

Terminal side of female terminals

24. Check for continuity between body ground and the following connector terminals, with all listed control units disconnected.

Connector	Terminal
SRS unit A (28P)	No. 24 (RED)
VSA modulator-control unit 47P	No. 11 (BLU)
TPMS control unit B (20P)	No. 9 (LT BLU)
Immobilizer-keyless control unit 7P	No. 3 (GRY)
SH-AWD control unit A (26P)	No. 15 (LT BLU)
ACC unit 20P	No. 8 (BLU)
Driver's under-dash fuse/ relay box connector P (30P)	No. 6 (RED)
Keyless access control unit A (31P)	No. 6 (GRY)

Is there continuity between the DLC terminal and each of the terminals in the chart?

YES—Replace the part that does not communicate with the HDS. ■

NO—Repair open in the wire between the DLC (K-line and DIAG-H line) and the appropriate connector. ■

25. Check for B-CAN system DTCs without the HDS (see page 22-103).

Is DTC B1168, B1169, and/or B1178 indicated?

YES—Go to step 37.

NO—Go to step 26.

26. Turn the ignition switch to LOCK (0).

27. Disconnect the HDS from the DLC.

28. Measure the voltage between DLC terminal No. 16 and body ground.

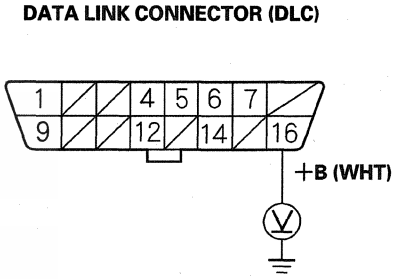

Terminal side of female terminals

Is there battery voltage?

YES—Go to step 29.

NO—Repair open in the wire between DLC terminal No. 16 and the No. 7 BACK UP (10 A) fuse in the driver's under-dash fuse/relay box. ■

(cont'd)

DLC Circuit Troubleshooting (cont'd)

29. Measure the voltage between DLC terminals No. 4 and No. 16.

DATA LINK CONNECTOR (DLC)

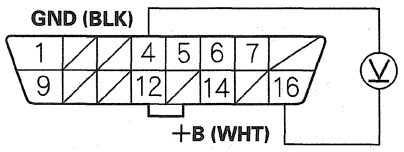

Terminal side of female terminals

Is there battery voltage?

YES—Go to step 30.

NO—Repair open in the wire between DLC terminal No. 4 and body ground (G501) (see page 22-32). ■

30. Connect the HDS to the DLC (see page 11-3).

31. Jump the SCS line with the HDS.

32. Disconnect PCM connector E (31P).

33. Disconnect the HDS from the DLC.

34. Check for continuity between PCM connector terminal E15 and DLC terminal No. 6.

DATA LINK CONNECTOR (DLC)

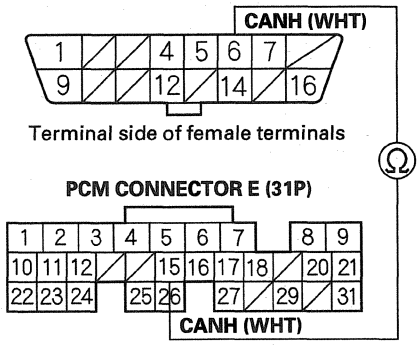

Wire side of female terminals

Is there continuity?

YES—Go to step 35.

NO—Repair open in the wire between the PCM (E15) and DLC terminal No. 6. ■

35. Check for continuity between PCM connector terminal E26 and DLC terminal No. 14.

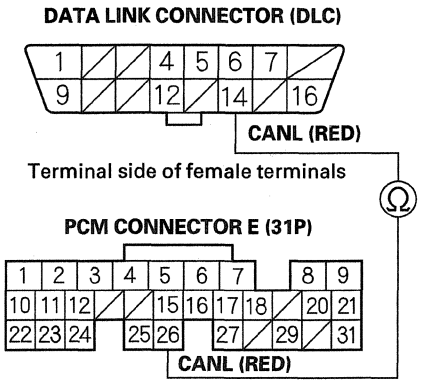

Is there continuity?

YES—Update the PCM if it does not have the latest software (see page 11-230), or substitute a known-good PCM (see page 11-7), then recheck. If the symptom/indication goes away with a known-good PCM, replace the original PCM (see page 11-232). ■

NO—Repair open in the wire between the PCM (E26) and DLC terminal No. 14. ■

36. Try to start the engine.

Does the engine start and idle smoothly?

YES—Go to the F-CAN circuit troubleshooting (see page 11-192). ■

NO—Go to step 37.

37. Turn the ignition switch to LOCK (0).

38. Check the No. 23 +B IG MAIN (50 A) fuse in the under-hood fuse/relay box.

Is the fuse OK?

YES—Repair open in the wire between the No. 23 +B IG MAIN (50 A) fuse and the ignition switch. If the wire is OK, go to step 39.

NO—Repair short in the wire between the No. 23 +B IG MAIN (50 A) fuse and the ignition switch. Also replace the No. 23 +B IG MAIN (50 A) fuse in the under-hood fuse/relay box. ■

39. Inspect the No. 23 IGP (7.5 A) fuse in the driver's under-dash fuse/relay box.

Is the fuse OK?

YES—Go to step 45.

NO—Go to step 40.

40. Remove the blown No. 23 IGP (7.5 A) fuse from the driver's under-dash fuse/relay box.

41. Jump the SCS line with the HDS.

42. Disconnect PCM connector A (31P).

43. Check for continuity between PCM connector terminal A4 and body ground.

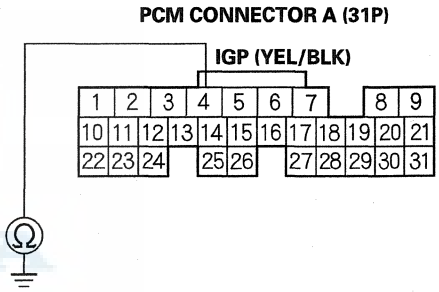

Is there continuity?

YES—Go to step 44.

NO—Update the PCM if it does not have the latest software (see page 11-230), or substitute a known-good PCM (see page 11-7), then recheck. If the symptom/indication goes away with a known-good PCM, replace the original PCM (see page 11-232). Also replace the No. 23 IGP (7.5 A) fuse in the driver's under-hood fuse/relay box. ■

(cont'd)

DLC Circuit Troubleshooting (cont'd)

44. While disconnecting each of the parts or connectors below, one at a time, check for continuity between PCM connector terminal A4 and body ground.

    - Each injector 2P connector
    - Camshaft position (CMP) sensor 3P connector
    - Crankshaft position (CKP) sensor A/B 6P connector
    - Driver's under-dash fuse/relay box connector X (39P)

    Does continuity go away when one of the above parts or connectors is disconnected?

    YES—Replace the part that made the short to body ground go away when disconnected. If the part is the PCM, update the PCM if it does not have the latest software (see page 11-230), or substitute a known-good PCM (see page 11-7), then recheck. If the symptom/indication goes away with a known-good PCM, replace the original PCM (see page 11-232). Also replace the No. 23 IGP (7.5 A) fuse in the driver's under-dash fuse/relay box. ■

    NO—Repair short in the wire between the PCM (A4) and the injector, the CMP sensor, the CKP sensor, or the driver's under-dash fuse/relay box. Also replace the No. 23 IGP (7.5 A) fuse in the driver's under-dash fuse/relay box. ■

45. Inspect the No. 19 FUEL PUMP (20 A) fuse from the driver's under-dash fuse/relay box.

    Is the fuse OK?

    YES—Go to step 55.

    NO—Go to step 46.

46. Remove the blown No. 19 FUEL PUMP (20 A) fuse from the driver's under-dash fuse/relay box.

47. Remove PGM-FI main relay 2 (A) from the driver's under-dash fuse/relay box.

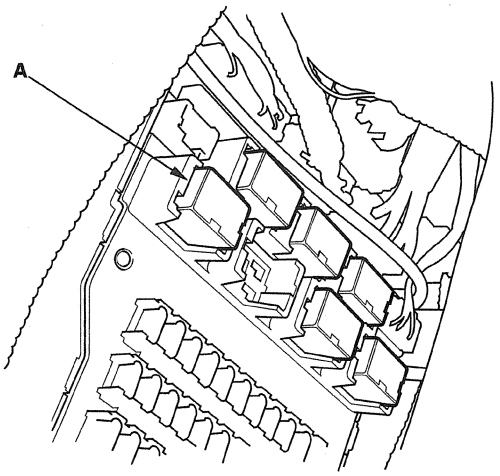

48. Test PGM-FI main relay 2 (FUEL PUMP).

    Is the relay is OK?

    YES—Go to step 49.

    NO—Replace PGM-FI main relay 2 (FUEL PUMP). Also replace the No. 19 FUEL PUMP (20 A) fuse. ■

49. Check for continuity between PGM-FI main relay 2 (FUEL PUMP) 4P connector terminal No. 1 and body ground.

PGM-FI MAIN RELAY 2 (FUEL PUMP) 4P CONNECTOR

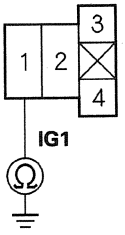

Terminal side of female terminals

Is there continuity?

YES—Go to step 50.

NO—Go to step 53.

50. Jump the SCS line with the HDS.

51. Disconnect PCM connector D (17P).

52. Check for continuity between PCM connector terminal D6 and body ground.

PCM CONNECTOR D (17P)

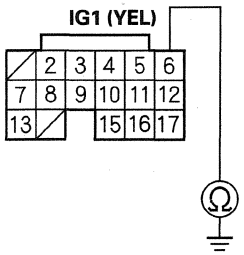

Wire side of female terminals

Is there continuity?

YES—Repair short in the wire between the No. 19 FUEL PUMP (20 A) fuse and the PCM (D6), or between the No. 19 FUEL PUMP (20 A) fuse and PGM-FI main relay 2. Also replace the No. 19 FUEL PUMP (20 A) fuse in the driver's under-dash fuse/relay box. ■

NO—Replace the No. 19 FUEL PUMP (20 A) fuse in the driver's under-dash fuse/relay box, and update the PCM if it does not have the latest software (see page 11-230), or substitute a known-good PCM (see page 11-7), then recheck. If the symptom/indication goes away with a known-good PCM, replace the original PCM (see page 11-232). ■

53. Disconnect the fuel pump control module 10P connector (see page 11-349).

54. Check for continuity between fuel pump control module 10P connector terminal No. 3 and body ground.

FUEL PUMP CONTROL MODULE 10P CONNECTOR

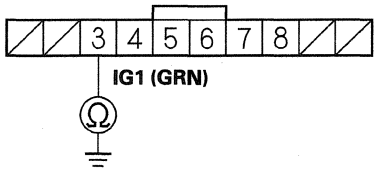

Wire side of female terminals

Is there continuity?

YES—Repair short in the wire between the fuel pump control module and PGM-FI main relay 2 (FUEL PUMP). Also replace the No. 19 FUEL PUMP (20 A) fuse. ■

NO—Check the fuel pump control module, and replace it if needed (see page 11-349). Also replace the No. 19 FUEL PUMP (20 A) fuse. ■

55. Jump the SCS line with the HDS.

56. Disconnect PCM connectors D (17P) and E (31P).

57. Turn the ignition switch to ON (II).

(cont'd)

DLC Circuit Troubleshooting (cont'd)

58. Measure the voltage between PCM connector terminal D6 and body ground.

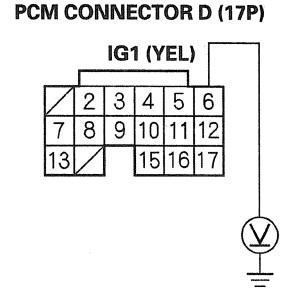

Wire side of female terminals

Is there battery voltage?

YES—Go to step 59.

NO—Repair open in the wire between the No. 19 FUEL PUMP (20 A) fuse and the PCM (D6). ■

59. Measure the voltage between PCM connector terminal E5 and body ground.

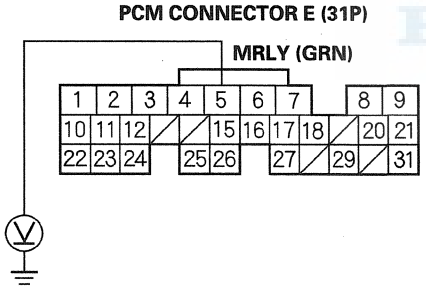

Wire side of female terminals

Is there battery voltage?

YES—Go to step 66.

NO—Go to step 60.

60. Turn the ignition switch to LOCK (0).

61. Disconnect the driver's under-dash fuse/relay box connector X (39P).

62. Check for continuity between PCM connector terminal E5 and driver's under-dash fuse/relay box connector X (39P) terminal No. 1.

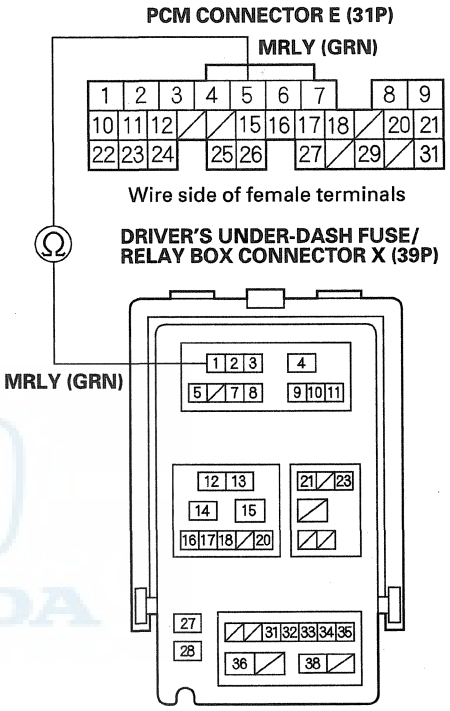

Wire side of female terminals

Is there continuity?

YES—Go to step 62.

NO—Repair open in the wire between the PCM (E5) and the driver's under-dash fuse/relay box. ■

63. Reconnect the driver's under-dash fuse/relay box connector X (39P).

64. Remove PGM-FI main relay 1 (FI MAIN) (A) from the driver's under-dash fuse/relay box connector X (39P).

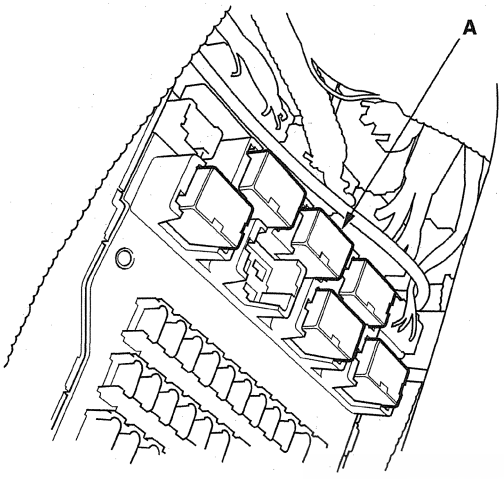

65. Check for continuity between PGM-FI main relay 1 (FI MAIN) 4P connector terminal No. 3 and driver's under-dash fuse/relay box connector X (39P) terminal No. 1.

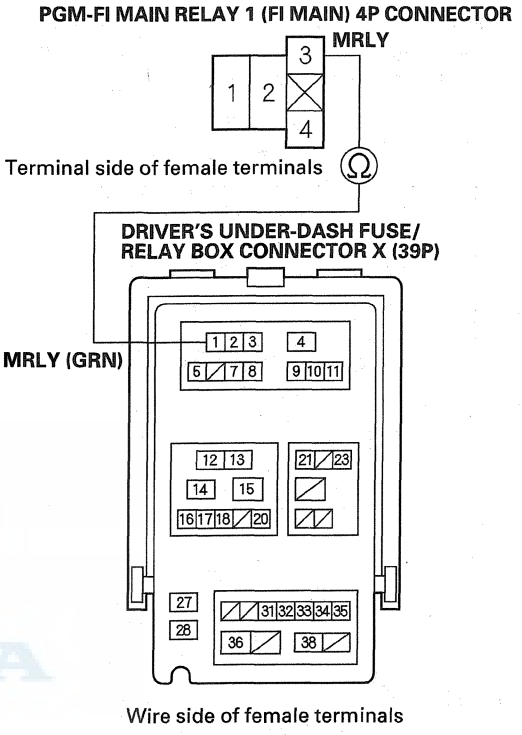

Is there continuity?

YES—Update the PCM if it does not have the latest software (see page 11-230), or substitute a known-good PCM (see page 11-7), then recheck. If the symptom/indication goes away with a known-good PCM, replace the original PCM (see page 11-232). ■

NO—Replace the driver's under-dash fuse/relay box (see page 22-88). ■

(cont'd)

DLC Circuit Troubleshooting (cont'd)

66. Turn the ignition switch to LOCK (0).

67. Disconnect the driver's under-dash fuse/relay box connector X (39P).

68. Check for continuity between PCM connector terminal A4 and driver's under-dash fuse/relay box 39P connector terminal No. 31.

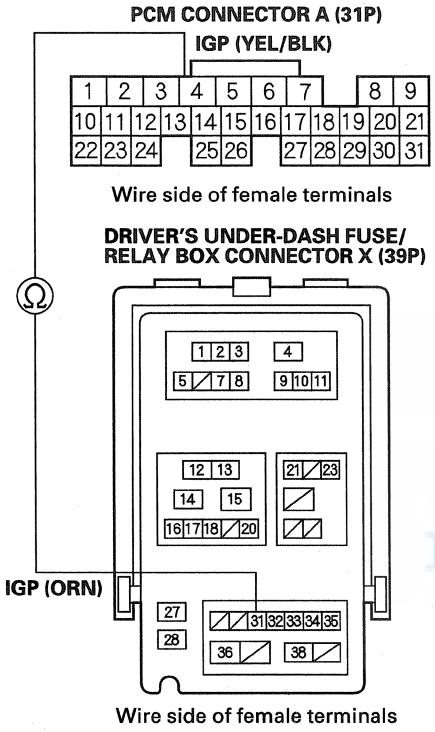

Is there continuity?

YES—Go to step 69.

NO—Repair open in the wire between the PCM (A4) and the driver's under-dash fuse/relay box. ■

69. Test PGM-FI main relay 1 in the driver's under-dash fuse/relay box (see page 22-88).

Is PGM-FI main relay 1 OK?

YES—Go to step 70.

NO—Replace PGM-FI main relay 1. ■

70. Disconnect PCM connector B (24P).

71. Check for continuity between body ground and PCM connector terminals A1, A2, A3, and B15 individually.

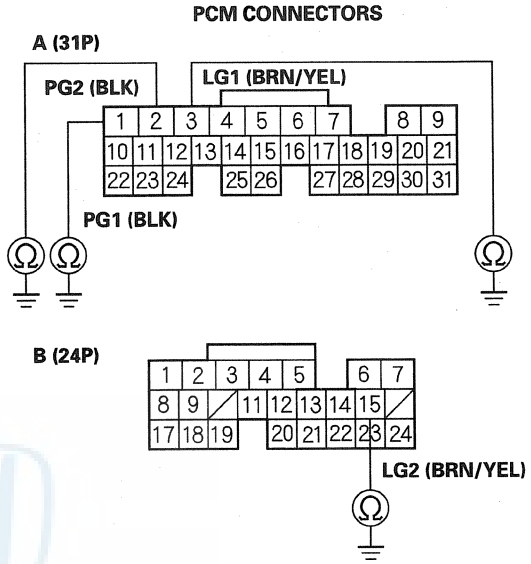

Is there continuity?

YES—Go to step 72.

NO—Repair open in the wire between the PCM (A1, A2, A3, B15) and G101. ■

72. Disconnect PCM connector C (22P).

73. Check for continuity between PCM connector terminal C6 and body ground.

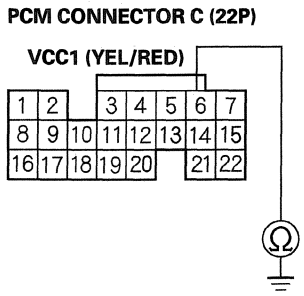

Wire side of female terminals

Is there continuity?

YES—Go to step 74.

NO—Go to step 75.

74. Continue to check for continuity between PCM connector terminal C6 and body ground, while disconnecting these parts, one at a time:

- MAP sensor 3P connector
- Output shaft (countershaft) speed sensor 3P connector

Does continuity go away when one of the above parts is disconnected?

YES—Replace the part that caused an open when it was disconnected. ■

NO—Repair short in the wire between the PCM (C6) and the MAP sensor, or the output shaft (countershaft) speed sensor. ■

75. Check for continuity between PCM connector terminal C14 and body ground.

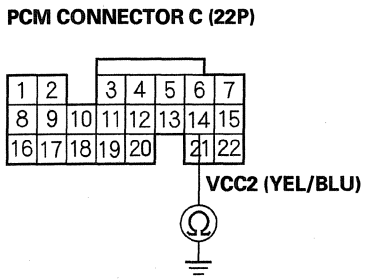

Wire side of female terminals

Is there continuity?

YES—Go to step 76.

NO—Go to step 77.

76. Continue to check for continuity between PCM connector terminal C14 and body ground, while disconnecting these parts, one at a time:

- EGR valve 5P connector
- Input shaft (mainshaft) speed sensor 3P connector
- IMT actuator 5P connector

Does continuity go away when one of the above parts is disconnected?

YES—Replace the part that caused an open when it was disconnected. ■

NO—Repair short in the wire between the PCM (C14) and the EGR valve, the input shaft (mainshaft) speed sensor, or the IMT actuator. ■

(cont'd)

DLC Circuit Troubleshooting (cont'd)

77. Check for continuity between PCM connector terminal D2 and body ground.

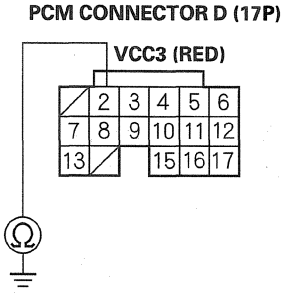

Wire side of female terminals

Is there continuity?

YES—Go to step 78.

NO—Go to step 77.

78. Continue to check for continuity between PCM connector terminal D2 and body ground, while disconnecting the APP sensor 6P connector.

Is there continuity?

YES—Repair short in the wire between the PCM (D2) and APP sensor A. ■

NO—Replace the accelerator pedal module (see page 11-282). ■

79. Check for continuity between PCM connector terminal E12 and body ground.

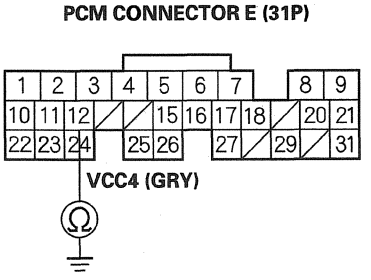

Wire side of female terminals

Is there continuity?

YES—Go to step 80.

NO—Update the PCM if it does not have the latest software (see page 11-230), or substitute a known-good PCM (see page 11-7), then recheck. If the symptom/indication goes away with a known-good PCM, replace the original PCM (see page 11-232). ■

80. Continue to check for continuity between PCM connector terminal E12 and body ground, while disconnecting these connectors, one at a time:

- APP sensor 6P connector
- FTP sensor 3P connector

Does continuity go away when one of the above parts is disconnected?

YES—Replace the part that caused an open when it was disconnected. ■

NO—Repair short in the wire between the PCM (E12) and APP sensor B or the FTP sensor. ■

Injector Replacement

1. Relieve the fuel pressure (see page 11-332).
2. Remove the intake manifold (see page 9-3).
3. Disconnect the quick-connect fitting (A) (see page 11-341).

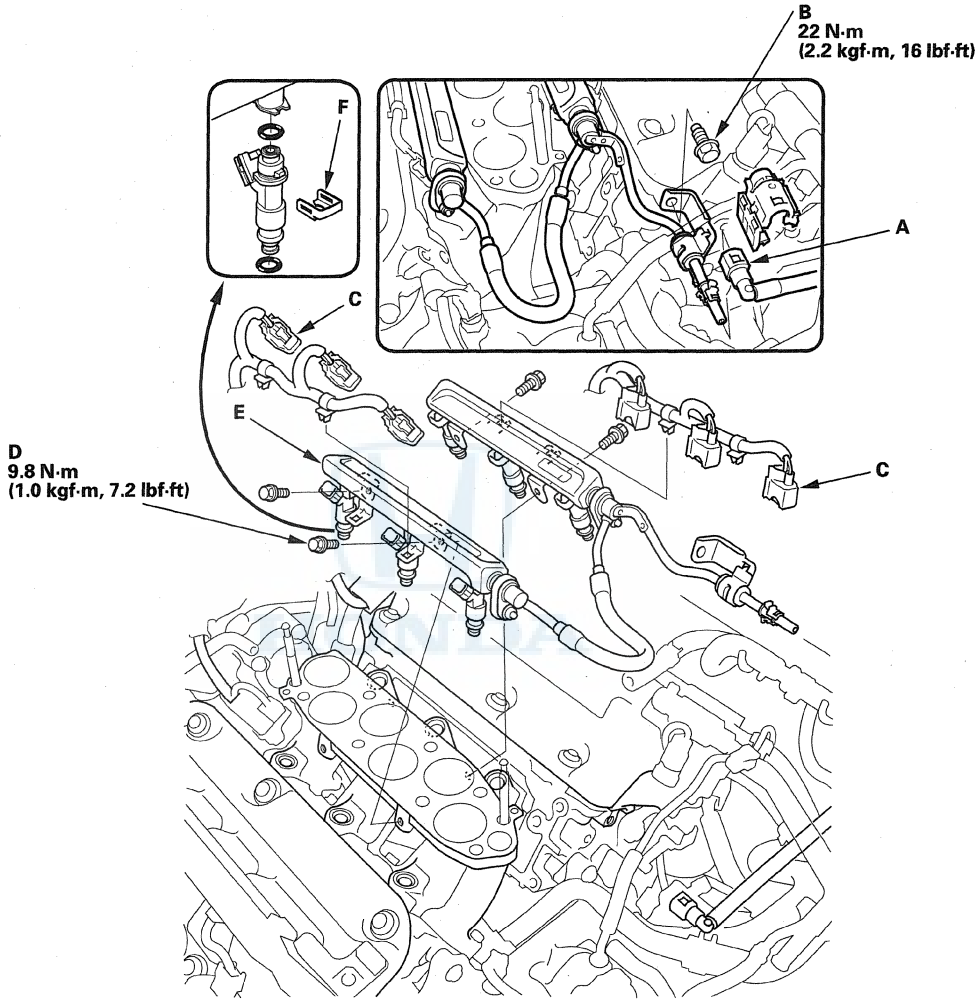

4. Remove the fuel joint hose mounting bolt (B).
5. Disconnect the connectors (C) from the injectors.
6. Remove the fuel rail mounting bolts (D) from the fuel rails (E).
7. Remove the fuel rails and the injectors from the injector base.
8. Remove the injector clips (F) from the fuel rails.
9. Remove the injectors from the fuel rails.

(cont'd)

Injector Replacement (cont'd)

10. Coat the new O-rings (black) (A) with clean engine oil, and insert the injectors (B) into the fuel rails (C).

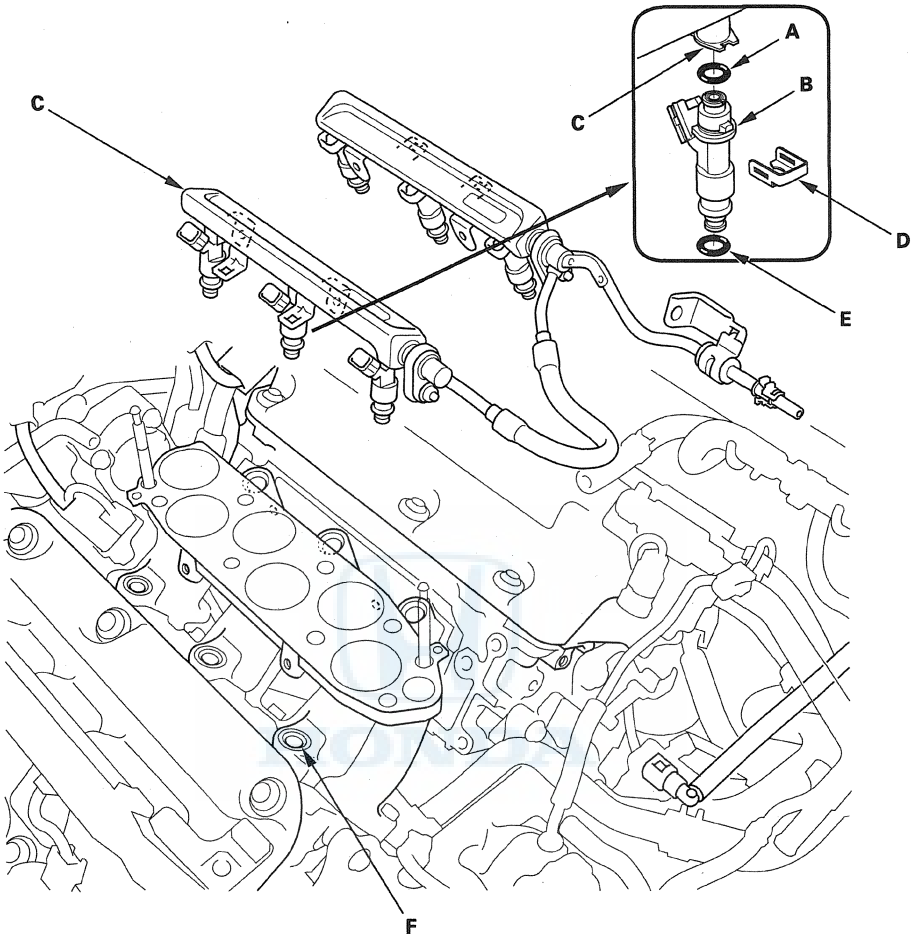

11. Install the injector clips (D).
12. Coat the new injector O-rings (green) (E) with clean engine oil.
13. Install the fuel rails and the injectors in the injector base (F).
14. Install the fuel rail mounting bolts, and connect the injector connectors.
15. Install the fuel joint hose mounting bolt.
16. Connect the quick-connect fitting (see page 11-344).
17. Turn the ignition switch to ON (II), but do not operate the starter. After the fuel pump runs for about 2 seconds, the fuel rail will be pressurized. Repeat this two or three times, then check for fuel leaks.
18. Install the intake manifold with a new gasket (see page 9-4).

MAP Sensor Replacement

1. Remove the engine cover (see step 2 on page 9-3).
2. Disconnect the MAP sensor connector (A).

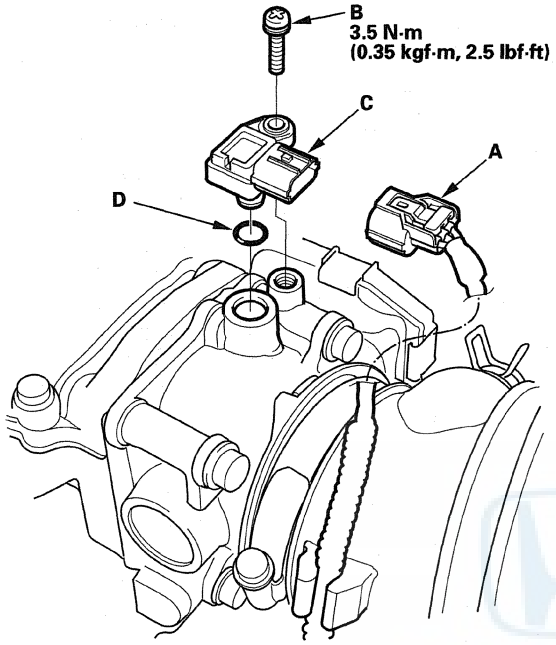

3. Remove the screw (B).
4. Remove the MAP sensor (C).
5. Install the parts in the reverse order of removal with a new O-ring (D).

MAF Sensor/IAT Sensor Replacement

1. Disconnect the MAF sensor/IAT sensor 5P connector (A).

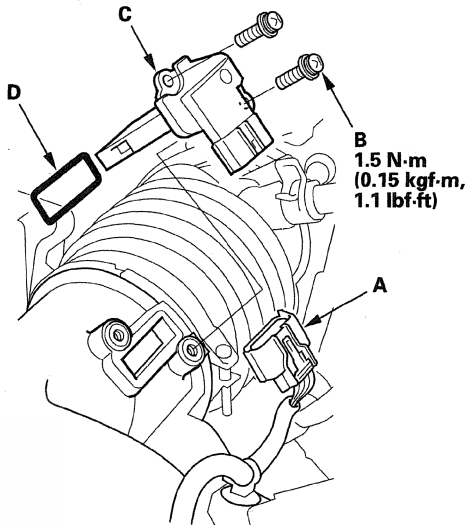

2. Remove the screws (B).
3. Remove the MAF sensor/IAT sensor (C).
4. Install the parts in the reverse order of removal with a new gasket (D).

ECT Sensor 1 Replacement

1. Drain the engine coolant (see page 10-6).
2. Remove the engine cover (see step 2 on page 9-3).
3. Disconnect the ECT sensor 1 2P connector (A).

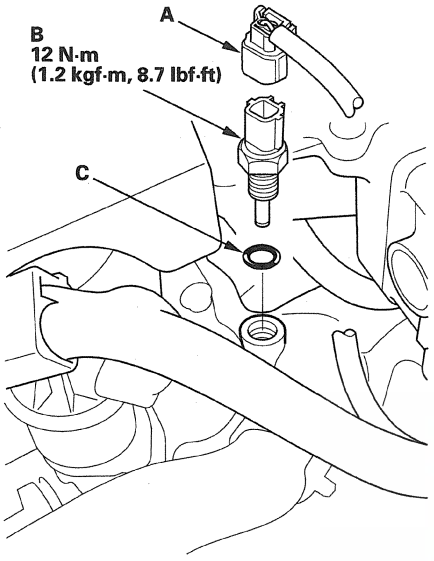

4. Remove ECT sensor 1 (B).
5. Install the parts in the reverse order of removal with a new O-ring (C), then refill the radiator with engine coolant (see page 10-6).

ECT Sensor 2 Replacement

1. Remove the splash shield (see page 20-177).
2. Drain the engine coolant (see page 10-6).
3. Disconnect the ECT sensor 2 2P connector (A).

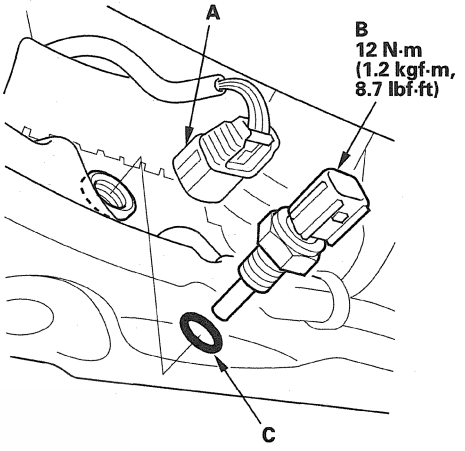

4. Remove ECT sensor 2 (B).
5. Install the parts in the reverse order of removal with a new O-ring (C), then refill the radiator with engine coolant (see page 10-6).

A/F Sensor Replacement

Special Tools Required
O2 sensor wrench, Snap-on YA8875 or SWR2, or equivalent, commercially available

Front Bank (Bank2)

1. Disconnect the front A/F sensor 6P connector (A), then remove the A/F sensor (B).

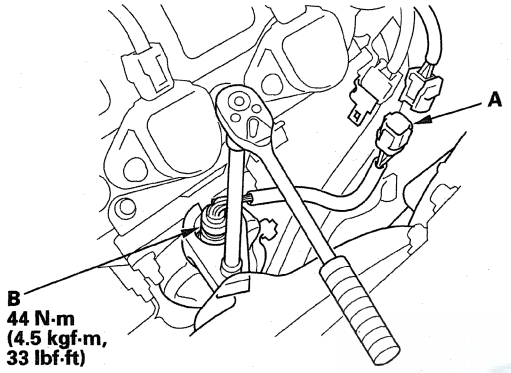

2. Install the parts in the reverse order of removal.

Rear Bank (Bank1)

1. Disconnect the rear A/F sensor 6P connector (A), then remove the A/F sensor (B).

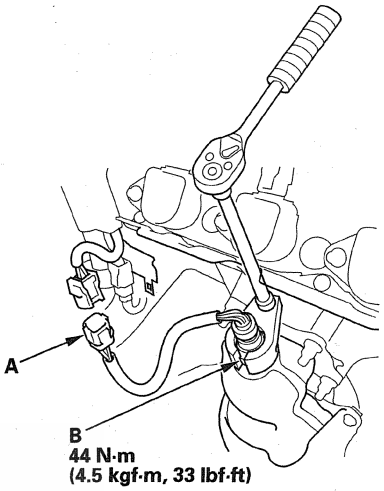

2. Install the parts in the reverse order of removal.

Secondary HO2S Replacement

Special Tools Required
O2 sensor socket wrench, Snap-on YA8875 or SWR2, or equivalent, commercially available

Front Bank (Bank 2)

1. Disconnect the front secondary HO2S 4P connector (A).

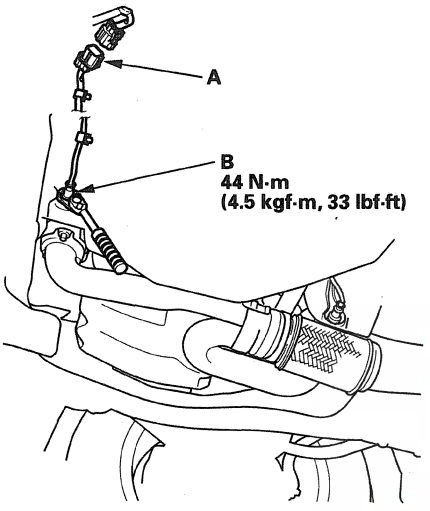

2. Raise the vehicle on a lift, then remove the front secondary HO2S (B) with an O2 sensor socket wrench.
3. Install the parts in the reverse order of removal.

Rear Bank (Bank 1)

1. Raise the vehicle on a lift.
2. Disconnect the rear secondary HO2S 4P connector (A), then remove the rear secondary HO2S (B) with an O2 sensor socket wrench.

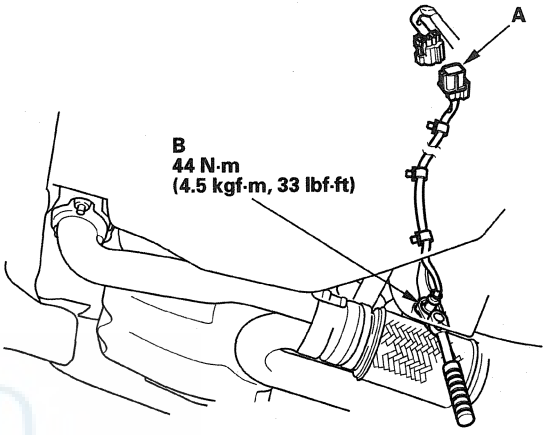

3. Install the parts in the reverse order of removal.

CMP Sensor Replacement

1. Remove the timing belt (see page 6-16).
2. Remove the front camshaft pulley (CMP sensor pulse plate) (A).

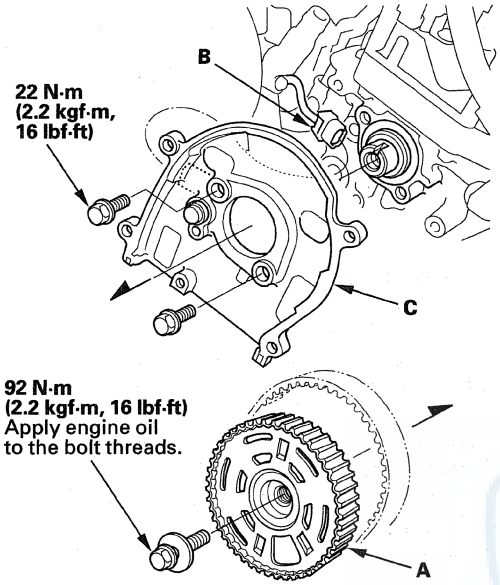

3. Disconnect the CMP sensor connector (B), then remove the back cover (C).
4. Remove the CMP sensor (A) from the back cover.

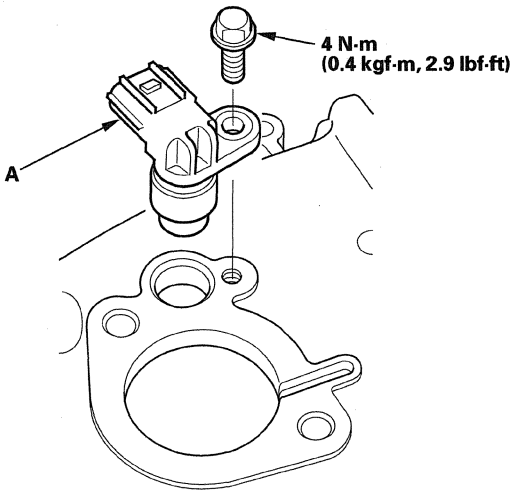

5. Install the parts in the reverse order of removal. Install the timing belt (see page 6-18).
6. Do the CKP pattern clear/CKP pattern learn procedure (see page 11-5).

CKP Sensor Replacement

1. Move the auto-tensioner to remove tension from the drive belt, then remove the belt (see page 6-16).
2. Remove the crankshaft pulley (see page 6-14).
3. Remove the upper and lower timing belt covers from the engine (see page 6-16).
4. Remove CKP sensor A/B (A) from the oil pump.

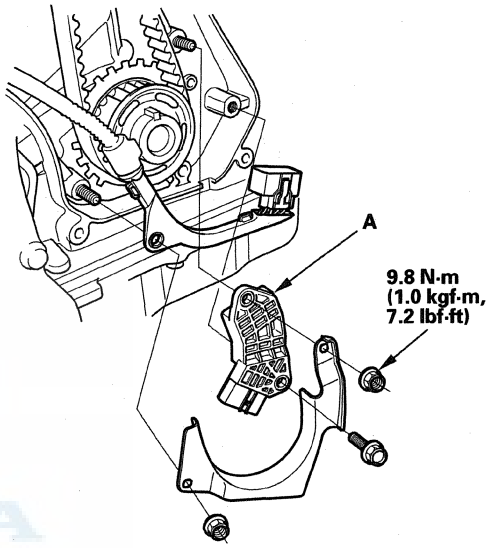

5. Install the parts in the reverse order of removal.
6. Do the CKP pattern clear/CKP pattern learn procedure (see page 11-5).

HONDA

Knock Sensor Replacement

1. Remove the intake manifold (see page 9-3).
2. Remove the injector base (see page 9-6).
3. Disconnect the knock sensor connector (A).

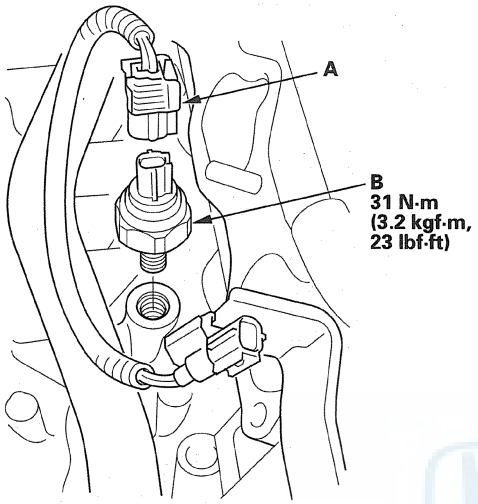

4. Remove the knock sensor (B).
5. Install the parts in the reverse order of removal.

PCM Update

Special Tools Required
- Honda diagnostic system (HDS) tablet tester
- Honda interface module (HIM) and an iN workstation with the latest HDS software version
- HDS pocket tester
- GNA600 and an iN workstation with the latest HDS software version

Any one of the above updating tools can be used.

NOTE:
- Make sure the HDS/iN workstation has the latest software version.
- Before you update the PCM, make sure the battery in the vehicle is fully charged, and connect a jumper battery (not a battery charger) to maintain system voltage.
- Never turn the ignition switch to ACC (I) or to LOCK (0) during the update. If there is a problem with the update, leave the ignition switch in ON (II).
- To prevent PCM damage, do not operate anything electrical (headlights, audio system, brakes, A/C, power windows, door locks, etc.) during the update.
- To ensure the latest program is installed, do a PCM update whenever the PCM is substituted or replaced.
- You cannot update a PCM with a program it already has. It will only accept a new program.
- If you need to diagnose the Honda interface module (HIM) because the HIM's red (#3) light came on or was flashing during the update, leave the ignition switch in ON (II) when you disconnect the HIM from the data link connector (DLC). This will prevent PCM damage.

1. Turn the ignition switch to ON (II), but do not start the engine.

2. Connect the HDS to the data link connector (DLC) (A) located under the driver's side of the dashboard.

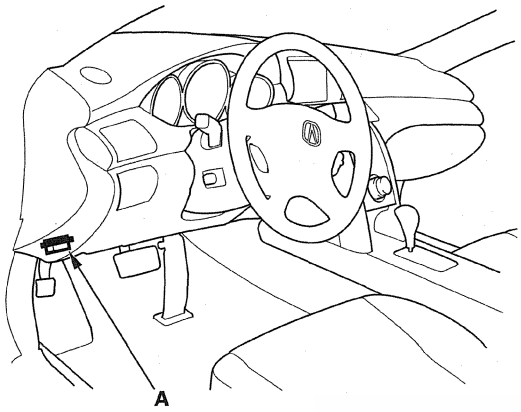

3. Make sure the HDS communicates with the PCM and other vehicle systems. If it doesn't, go to the DLC circuit troubleshooting (see page 11-211). If you are returning from the DLC circuit troubleshooting, skip steps 4 and 5 and clean the throttle body after updating the PCM.

4. Select the INSPECTION MENU with the HDS.

5. Select the ETCS TEST, then select the TP POSITION CHECK, and follow the HDS screen prompts.

   NOTE: If the TP POSITION CHECK indicates FAILED, continue this procedure.

6. Exit the HDS diagnostic system, then select the update mode, and follow the screen prompts to update the PCM.

7. If the software in the PCM is the latest, disconnect the HDS/HIM/GNA600 from the DLC, and go back to the procedure that you were doing. If the software in the PCM is not the latest, follow the instructions on the screen. If prompted to choose the PGM-FI system or the A/T system, make sure you update both.

   NOTE: If the PCM update system requires you to cool the PCM, follow the screen prompts. If there is a problem during the update procedure (programming takes over 15 minutes, status bar goes over 100 %, D or immobilizer indicator flashes, HDS tablet freezes, etc.), follow these steps to minimize the chance of damaging the PCM:

   - Leave the ignition switch in the ON (II) position.
   - Connect a jumper battery (do not connect a battery charger).
   - Shut down the HDS.
   - Disconnect the HDS from the DLC.
   - Reboot the HDS.
   - Reconnect the HDS to the DLC, and try the update procedure again.

8. If the TP POSITION CHECK failed in step 5, clean the throttle body (see page 11-366).

9. Do the PCM idle learn procedure (see page 11-313).

10. Do the CKP pattern learn procedure (see page 11-5).

PCM Replacement

Special Tools Required
- Honda diagnostic system (HDS) tablet tester
- Honda interface module (HIM) and an iN workstation with the latest HDS software version
- HDS pocket tester
- GNA600 and an iN workstation with the latest HDS software version

Any one of the above updating tools can be used.

NOTE:
- Make sure the HDS/iN workstation has the latest software version.
- If you are replacing the PCM after substituting a known-good PCM, reinstall the original PCM, then do this procedure.
- During the procedure, if any READ DATA, WRITE DATA, or other data checks fail, note the failure, then continue.

1. Connect the HDS to the data link connector (DLC) (A) located under the driver's side of the dashboard.

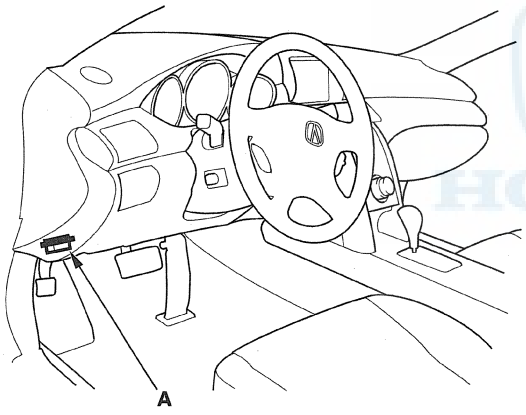

2. Turn the ignition switch to ON (II).
3. Make sure the HDS communicates with the PCM and other vehicle systems. If it doesn't, go to the DLC circuit troubleshooting (see page 11-211). If you are returning from DLC circuit troubleshooting, skip steps 4 through 9, 17 through 19, 22, and 23, then do this after replacing the PCM:
   - Replace the engine oil (see page 8-11) and the engine oil filter (see page 8-12).
   - Clean the throttle body (see page 11-366).
4. Select the PGM-FI system with the HDS.
5. Select the INSPECTION MENU with the HDS.
6. Select the ETCS TEST, then select the TP POSITION CHECK, and follow the screen prompts.

   NOTE: If the TP POSITION CHECK indicates FAILED, continue with this procedure.
7. Select the REPLACE PCM MENU, then select READ DATA, and follow the screen prompts.

   NOTE:
   - Doing this step copies (READS) the engine oil life data from the original PCM so you can later download (WRITE) it into the new PCM.
   - If the READ DATA indicates FAILED, continue with this procedure.
8. Turn the ignition switch to LOCK (0).
9. Do the battery terminal disconnection procedure (see page 22-91).
10. Remove the front console covers (A) (see step 5 on page 20-93), and pull back the carpet.

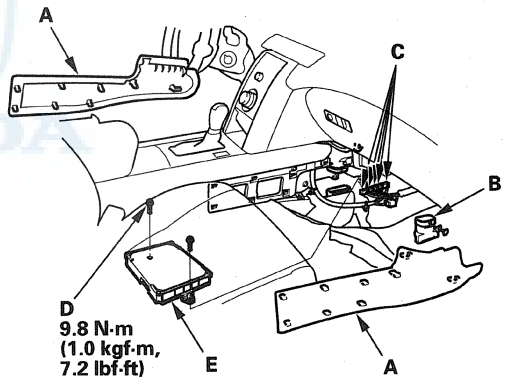

11. Remove the ducts (B).
12. Disconnect the PCM connectors (C).
13. Remove the bolts (D), then remove the PCM (E).
14. Install the parts in the reverse order of removal.
15. Do the battery terminal reconnection procedure (see page 22-91).
16. Turn the ignition switch to ON (II).

17. Manually input the VIN to the PCM with the HDS.

    NOTE: DTC P0630 VIN Not Programmed or Mismatch may be stored because the VIN has not been programmed into the PCM, ignore it, and continue this procedure.

18. If the READ DATA (engine oil life) failed in step 7, go to step 21. Otherwise, go to step 19.

19. Select the PGM-FI system with the HDS.

20. Select the REPLACE PCM MENU, then select WRITE DATA, and follow the screen prompts.

    NOTE: If the WRITE DATA indicates FAILED, continue this procedure.

21. Select IMMOBI system with the HDS.

22. Enter the immobilizer PCM code that you got from the iN, and use the PCM replacement procedure in the HDS; it allows you to start the engine.

23. If the TP POSITION CHECK failed in step 6, clean the throttle body (see page 11-366), then go to step 24.

24. If the READ DATA failed in step 7 or the WRITE DATA failed in step 20, replace the engine oil (see page 8-11) and engine oil filter (see page 8-12), then go to step 25.

25. Select PGM-FI system, and reset the PCM with the HDS.

26. Update the PCM if it does not have the latest software (see page 11-230).

27. Do the PCM idle learn procedure (see page 11-313).

28. Do the CKP pattern learn procedure (see page 11-5).

Component Location Index

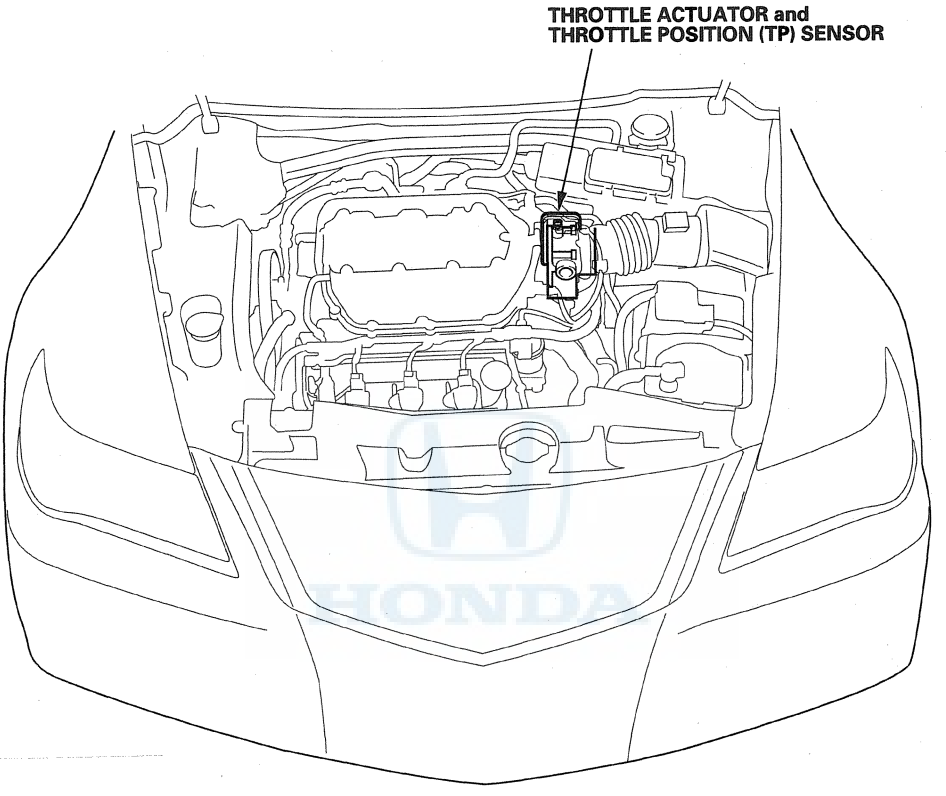

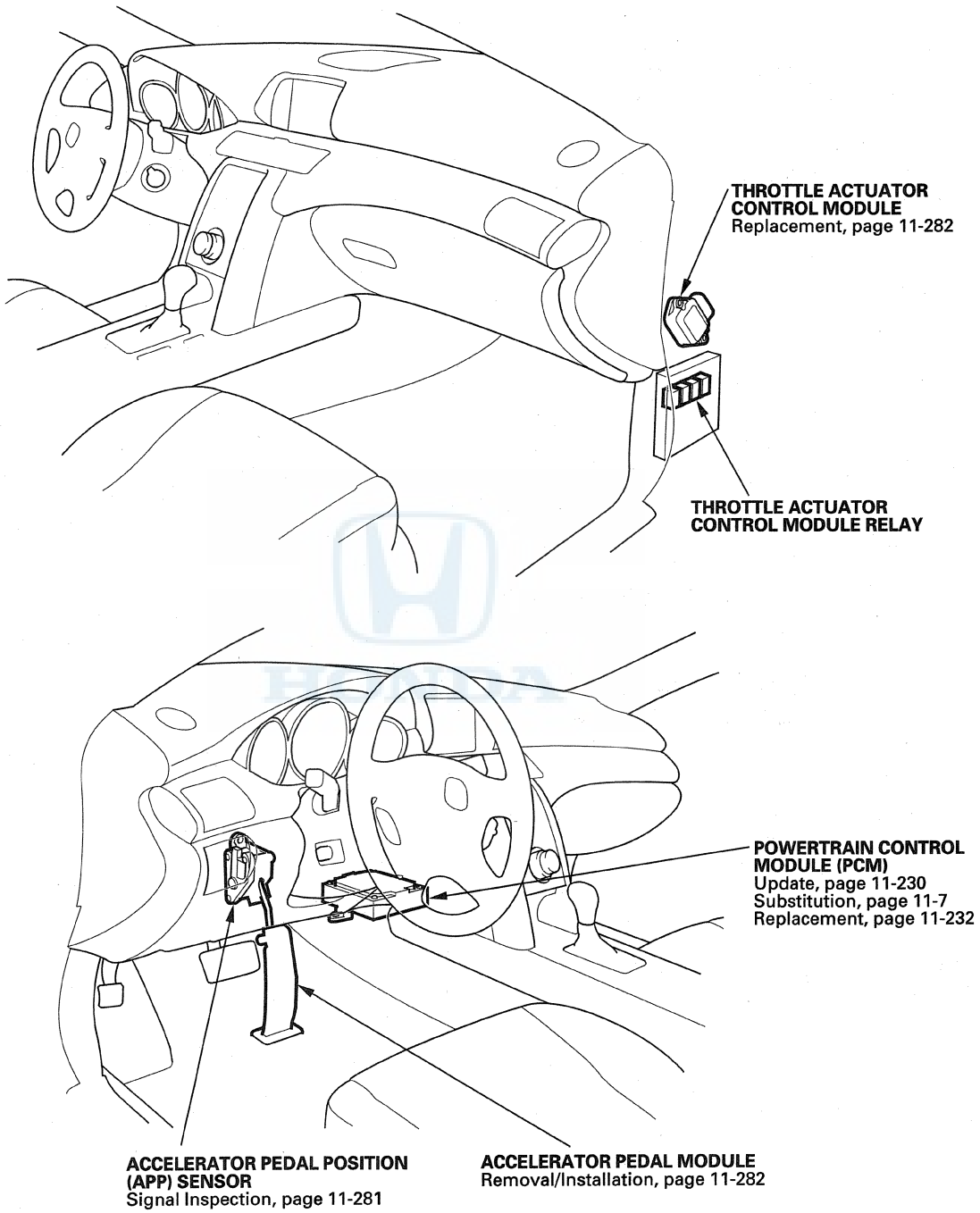
THROTTLE ACTUATOR CONTROL MODULE
Replacement, page 11-282
THROTTLE ACTUATOR CONTROL MODULE RELAY
POWERTRAIN CONTROL MODULE (PCM)
Update, page 11-230
Substitution, page 11-7
Replacement, page 11-232
ACCELERATOR PEDAL POSITION (APP) SENSOR
Signal Inspection, page 11-281
ACCELERATOR PEDAL MODULE
Removal/Installation, page 11-282

DTC Troubleshooting

DTC P0122: TP Sensor A Circuit Low Voltage

NOTE: Before you troubleshoot, record all freeze data and any on-board snapshot, and review the general troubleshooting information (see page 11-3).

1. Turn the ignition switch to ON (II).
2. Clear the DTC with the HDS.
3. Check TP SENSOR A in the DATA LIST with the HDS.

   Is there about 0.3 V or less?

   YES—Go to step 4.

   NO—Intermittent failure, the system is OK at this time. Check for poor connections or loose terminals at the throttle body and the throttle actuator control module. ■
4. Check for Pending or Confirmed DTCs with the HDS.

   Are DTC P0122 and P0222 indicated at the same time?

   YES—Check for, and repair any poor connections or loose terminals at the throttle body, the throttle actuator control module, and the PCM, then go to step 21. If the connections and terminals are OK, go to step 11.

   NO—Go to step 5.
5. Turn the ignition switch to LOCK (0).
6. Disconnect the throttle body 6P connector.
7. Disconnect the C251 connector (13P) between the PCM subharness and the throttle actuator control module subharness.
8. Check for continuity between throttle body 6P connector terminal No. 1 and body ground.

THROTTLE BODY 6P CONNECTOR

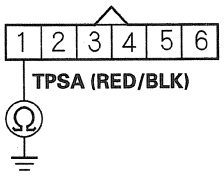

Wire side of female terminals

Is there continuity?

YES—Repair short in the wire between the throttle body and the C251 connector (TPSA line), then go to step 21.

NO—Go to step 9.

9. Disconnect the throttle actuator control module 16P connector.

10. Check for continuity between C251 connector (13P) terminal No. 4 and body ground.

C251 CONNECTOR (13P)

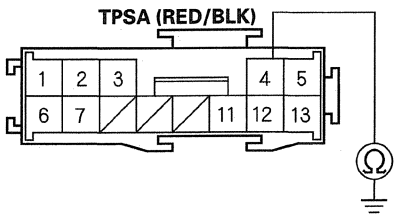

Terminal side of male terminals

Is there continuity?

YES—Repair short in the wire between the throttle actuator control module and the C251 connector (TPSA line), then go to step 21.

NO—Go to step 26.

11. Measure the voltage between throttle body 6P connector terminal No. 2 and body ground.

THROTTLE BODY 6P CONNECTOR

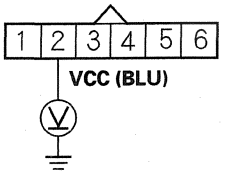

Wire side of female terminals

Is there about 5 V?

YES—Go to step 19.

NO—Go to step 12.

12. Turn the ignition switch to LOCK (0).

13. Disconnect the throttle body 6P connector.

14. Disconnect the C251 connector (13P) between the PCM subharness and the throttle actuator control module subharness.

15. Connect throttle body 6P connector terminal No. 2 to body ground with a jumper wire.

THROTTLE BODY 6P CONNECTOR

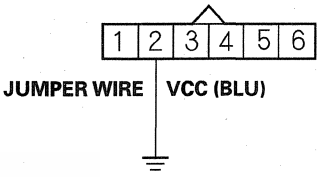

Wire side of female terminals

16. Check for continuity between C251 connector (13P) terminal No. 3 and body ground.

C251 CONNECTOR (13P)

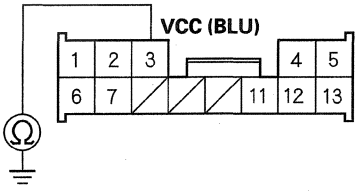

Wire side of female terminals

Is there continuity?

YES—Go to step 17.

NO—Repair open in the wire between the throttle body and the throttle actuator control module (VCC line), then go to step 21.

(cont'd)

DTC Troubleshooting (cont'd)

17. Disconnect the throttle actuator control module 16P connector (see page 11-282).

18. Check for continuity between throttle actuator control module 16P connector terminal No. 11 and C251 connector (13P) terminal No. 3.

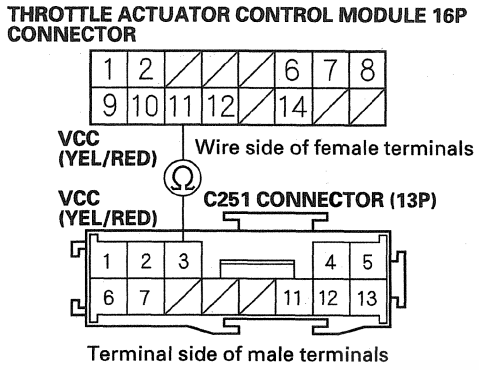

Is there continuity?

YES—Go to step 26.

NO—Repair open in the wire between the throttle actuator control module (VCC line) and the C251 connector, then go to step 21.

19. Turn the ignition switch to LOCK (0).

20. Replace the throttle body (see page 11-369).

21. Reconnect all connectors.

22. Turn the ignition switch to ON (II).

23. Reset the PCM with the HDS.

24. Do the PCM idle learn procedure (see page 11-313).

25. Check for Pending or Confirmed DTCs with the HDS.

Is DTC P0122 indicated?

YES—Check for poor connections or loose terminals at the throttle body and the throttle actuator control module, then go to step 1.

NO—Troubleshooting is complete. If any other Pending or Confirmed DTCs are indicated, go to the indicated DTC's troubleshooting.■

26. Reconnect all connectors.

27. Update the PCM if it does not have the latest software (see page 11-230), or substitute a known-good PCM (see page 11-7).

28. Check for Pending or Confirmed DTCs with the HDS.

Is DTC P0122 indicated?

YES—Check for poor connections or loose terminals at the throttle body and the throttle actuator control module. If the PCM was updated, substitute a known-good PCM (see page 11-7), then recheck. If the PCM was substituted, go to step 1.

NO—If the PCM was updated, troubleshooting is complete. If the PCM was substituted, replace the original PCM (see page 11-232). If any other Pending or Confirmed DTCs are indicated, go to the indicated DTC's troubleshooting.■

DTC P0123: TP Sensor A Circuit High Voltage

NOTE: Before you troubleshoot, record all freeze data and any on-board snapshot, and review the general troubleshooting information (see page 11-3).

1. Turn the ignition switch to ON (II).
2. Clear the DTC with the HDS.
3. Check TP SENSOR A in the DATA LIST with the HDS.

   Is there about 4.8 V or more?

   YES—Go to step 4.

   NO—Intermittent failure, the system is OK at this time. Check for poor connections or loose terminals at the throttle body and the throttle actuator control module. ■
4. Check for Pending or Confirmed DTCs with the HDS.

   Are DTC P0123 and P0223 indicated at the same time?

   YES—Go to step 13.

   NO—Go to step 5.
5. Measure the voltage between throttle body 6P connector terminal No. 1 and body ground.

THROTTLE BODY 6P CONNECTOR

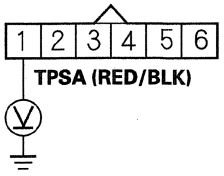

Wire side of female terminals

Is there about 5 V?

YES—Go to step 20.

NO—Go to step 8.

6. Turn the ignition switch to LOCK (0).
7. Disconnect the throttle body 6P connector.
8. Disconnect the C251 connector (13P) between the PCM subharness and the throttle actuator control module subharness.
9. Connect throttle body 6P connector terminal No. 1 to body ground with a jumper wire.

THROTTLE BODY 6P CONNECTOR

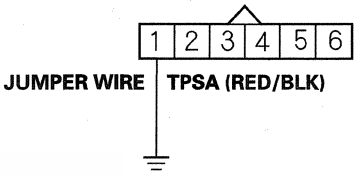

Wire side of female terminals

10. Check for continuity between C251 connector (13P) terminal No. 4 and body ground.

C251 CONNECTOR (13P)

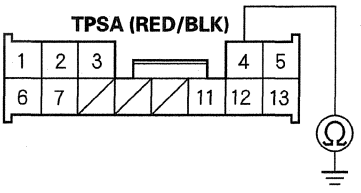

Wire side of female terminals

Is there continuity?

YES—Go to step 11.

NO—Repair open in the wire between the throttle body and the C251 connector (TPSA line), then go to step 22.

(cont'd)

DTC Troubleshooting (cont'd)

11. Disconnect the throttle actuator control module 16P connector (see page 11-282).

12. Check for continuity between throttle actuator control module 16P connector terminal No. 10 and C251 connector (13P) terminal No. 4.

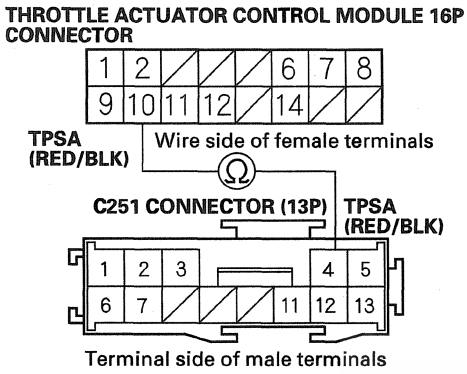

Is there continuity?

YES—Go to step 27.

NO—Repair open in the wire between the throttle actuator control module and the C251 connector (TPSA line), then go to step 22.

13. Turn the ignition switch to LOCK (0).

14. Disconnect the throttle body 6P connector.

15. Disconnect the C251 connector (13P) between the PCM subharness and the throttle actuator control module subharness.

16. Connect throttle body 6P connector terminal No. 4 to body ground with a jumper wire.

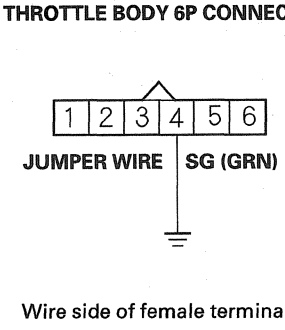

17. Check for continuity between C251 connector (13P) terminal No. 5 and body ground.

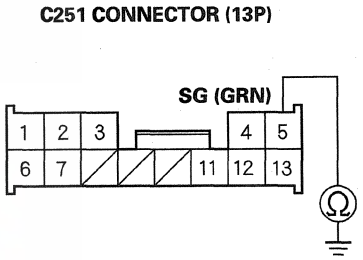

Is there continuity?

YES—Go to step 18.

NO—Repair open in the wire between the throttle body and the C251 connector (SG line), then go to step 22.

18. Disconnect the throttle actuator control module 16P connector (see page 11-282).

19. Check for continuity between throttle actuator control module 16P connector terminal No. 9 and C251 connector (13P) terminal No. 5.

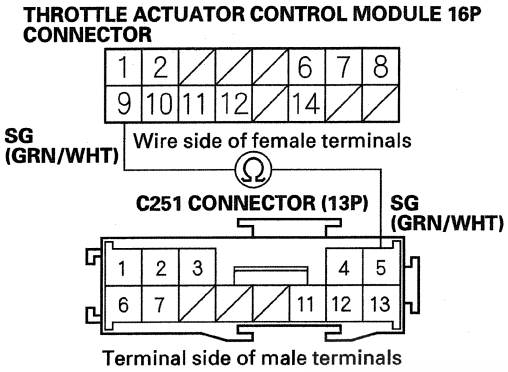

Is there continuity?

YES—Go to step 27.

NO—Repair open in the wire between the throttle actuator control module (SG line) and the C251 connector, then go to step 22.

20. Turn the ignition switch to LOCK (0).

21. Replace the throttle body (see page 11-369).

22. Reconnect all connectors.

23. Turn the ignition switch to ON (II).

24. Reset the PCM with the HDS.

25. Do the PCM idle learn procedure (see page 11-313).

26. Check for Pending or Confirmed DTCs with the HDS.

Is DTC P0123 indicated?

YES—Check for poor connections or loose terminals at the throttle body and the throttle actuator control module, then go to step 1.

NO—Troubleshooting is complete. If any other Pending or Confirmed DTCs are indicated, go to the indicated DTC's troubleshooting. ■

27. Reconnect all connectors.

28. Update the PCM if it does not have the latest software (see page 11-230), or substitute a known-good PCM (see page 11-7).

29. Check for Pending or Confirmed DTCs with the HDS.

Is DTC P0123 indicated?

YES—Check for poor connections or loose terminals at the throttle body and the throttle actuator control module. If the PCM was updated, substitute a known-good PCM (see page 11-7), then recheck. If the PCM was substituted, go to step 1.

NO—If the PCM was updated, troubleshooting is complete. If the PCM was substituted, replace the original PCM (see page 11-232). If any other Pending or Confirmed DTCs are indicated, go to the indicated DTC's troubleshooting. ■

DTC Troubleshooting (cont'd)

DTC P0222: TP Sensor B Circuit Low Voltage

NOTE: Before you troubleshoot, record all freeze data and any on-board snapshot, and review the general troubleshooting information (see page 11-3).

1. Turn the ignition switch to ON (II).
2. Clear the DTC with the HDS.
3. Check TP SENSOR B in the DATA LIST with the HDS.

   Is there about 0.3 V or less?

   YES—Go to step 4.

   NO—Intermittent failure, the system is OK at this time. Check for poor connections or loose terminals at the throttle body and the throttle actuator control module. ■

4. Check for Pending or Confirmed DTCs with the HDS.

   Are DTC P0122 and P0222 indicated at the same time?

   YES—Check for, and repair any poor connections or loose terminals at the throttle body, the throttle actuator control module, and the PCM, then go to step 21. If the connections and terminals are OK, go to step 11.

   NO—Go to step 5.

5. Turn the ignition switch to LOCK (0).
6. Disconnect the throttle body 6P connector.
7. Disconnect the C251 connector (13P) between the PCM subharness and the throttle actuator control module subharness.
8. Check for continuity between throttle body 6P connector terminal No. 3 and body ground.

THROTTLE BODY 6P CONNECTOR

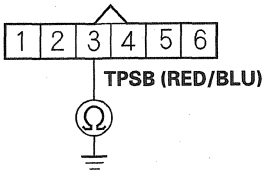

Wire side of female terminals

Is there continuity?

YES—Repair short in the wire between the throttle body and the C251 connector (TPSB line), then go to step 21.

NO—Go to step 9.

9. Disconnect the throttle actuator control module 16P connector.

10. Check for continuity between C251 connector (13P) terminal No. 2 and body ground.

C251 CONNECTOR (13P)

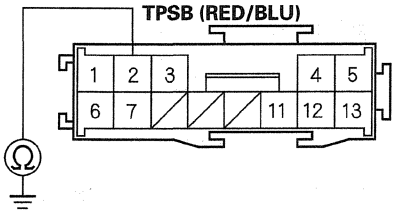

Terminal side of male terminals

Is there continuity?

YES—Repair short in the wire between the throttle actuator control module and the C251 connector (TPSB line), then go to step 21.

NO—Go to step 26.

11. Measure the voltage between throttle body 6P connector terminal No. 2 and body ground.

THROTTLE BODY 6P CONNECTOR

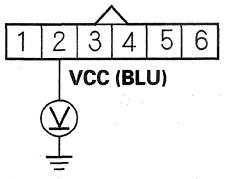

Wire side of female terminals

Is there about 5 V?

YES—Go to step 19.

NO—Go to step 12.

12. Turn the ignition switch to LOCK (0).

13. Disconnect the throttle body 6P connector.

14. Disconnect the C251 connector (13P) between the PCM subharness and the throttle actuator control module subharness.

15. Connect throttle body 6P connector terminal No. 2 to body ground with a jumper wire.

THROTTLE BODY 6P CONNECTOR

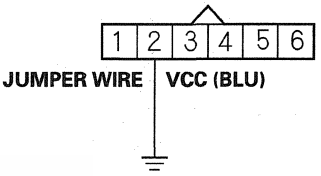

Wire side of female terminals

16. Check for continuity between C251 connector (13P) terminal No. 3 and body ground.

C251 CONNECTOR (13P)

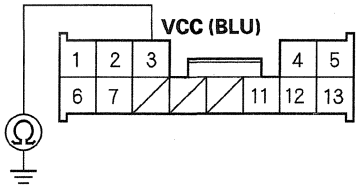

Wire side of female terminals

Is there continuity?

YES—Go to step 21.

NO—Repair open in the wire between the throttle body and the throttle actuator control module (VCC line), then go to step 21.

(cont'd)

DTC Troubleshooting (cont'd)

17. Disconnect the throttle actuator control module 16P connector (see page 11-282).

18. Check for continuity between throttle actuator control module 16P connector terminal No. 11 and C251 connector (13P) terminal No. 3.

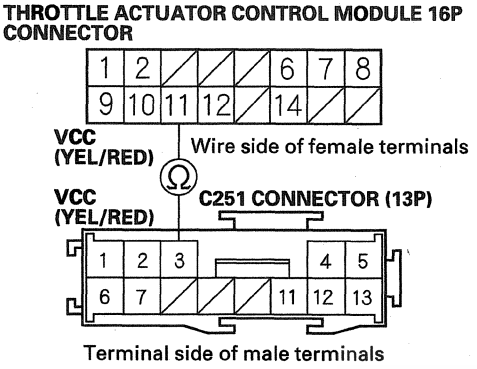

Is there continuity?

YES—Go to step 26.

NO—Repair open in the wire between the throttle actuator control module (VCC line) and the C251 connector, then go to step 21.

19. Turn the ignition switch to LOCK (0).

20. Replace the throttle body (see page 11-369).

21. Reconnect all connectors.

22. Turn the ignition switch to ON (II).

23. Reset the PCM with the HDS.

24. Do the PCM idle learn procedure (see page 11-313).

25. Check for Pending or Confirmed DTCs with the HDS.

Is DTC P0222 indicated?

YES—Check for poor connections or loose terminals at the throttle body and the throttle actuator control module, then go to step 1.

NO—Troubleshooting is complete. If any other Pending or Confirmed DTCs are indicated, go to the indicated DTC's troubleshooting. ■

26. Reconnect all connectors.

27. Update the PCM if it does not have the latest software (see page 11-230), or substitute a known-good PCM (see page 11-7).

28. Check for Pending or Confirmed DTCs with the HDS.

Is DTC P0222 indicated?

YES—Check for poor connections or loose terminals at the throttle body and the throttle actuator control module. If the PCM was updated, substitute a known-good PCM (see page 11-7), then recheck. If the PCM was substituted, go to step 1.

NO—If the PCM was updated, troubleshooting is complete. If the PCM was substituted, replace the original PCM (see page 11-232). If any other Pending or Confirmed DTCs are indicated, go to the indicated DTC's troubleshooting. ■

DTC P0223: TP Sensor B Circuit High Voltage

NOTE: Before you troubleshoot, record all freeze data and any on-board snapshot, and review the general troubleshooting information (see page 11-3).

1. Turn the ignition switch to ON (II).
2. Clear the DTC with the HDS.
3. Check TP SENSOR B in the DATA LIST with the HDS.

   Is there about 4.8 V or more?

   YES—Go to step 4.

   NO—Intermittent failure, the system is OK at this time. Check for poor connections or loose terminals at the throttle body and the throttle actuator control module. ■
4. Check for Pending or Confirmed DTCs with the HDS.

   Are DTC P0123 and P0223 indicated at the same time?

   YES—Go to step 13.

   NO—Go to step 5.
5. Measure the voltage between throttle body 6P connector terminal No. 3 and body ground.

THROTTLE BODY 6P CONNECTOR

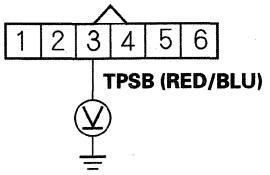

Wire side of female terminals

Is there about 5 V?

YES—Go to step 20.

NO—Go to step 6.

6. Turn the ignition switch to LOCK (0).
7. Disconnect the throttle body 6P connector.
8. Disconnect the C251 connector (13P) between the PCM subharness and the throttle actuator control module subharness.
9. Connect throttle body 6P connector terminal No. 3 to body ground with a jumper wire.

THROTTLE BODY 6P CONNECTOR

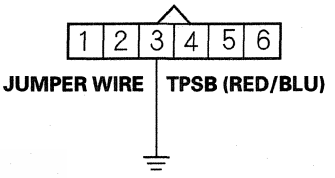

Wire side of female terminals

10. Check for continuity between C251 connector (13P) terminal No. 2 and body ground.

C251 CONNECTOR (13P)

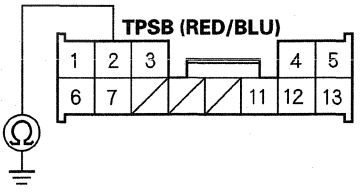

Wire side of female terminals

Is there continuity?

YES—Go to step 11.

NO—Repair open in the wire between the throttle body and the C251 connector (TPSB line), then go to step 22.

(cont'd)

DTC Troubleshooting (cont'd)

11. Disconnect the throttle actuator control module 16P connector (see page 11-282).

12. Check for continuity between throttle actuator control module 16P connector terminal No. 12 and C251 connector (13P) terminal No. 2.

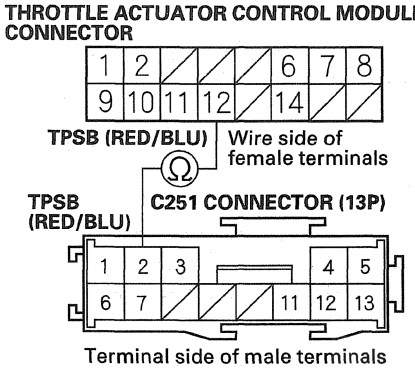

Is there continuity?

YES—Go to step 27.

NO—Repair open in the wire between the throttle actuator control module and the C251 connector (TPSB line), then go to step 22.

13. Turn the ignition switch to LOCK (0).

14. Disconnect the throttle body 6P connector.

15. Disconnect the C251 connector (13P) between the PCM subharness and the throttle actuator control module subharness.

16. Connect throttle body 6P connector terminal No. 4 to body ground with a jumper wire.

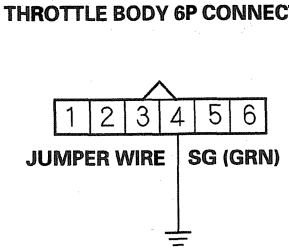

17. Check for continuity between C251 connector (13P) terminal No. 5 and body ground.

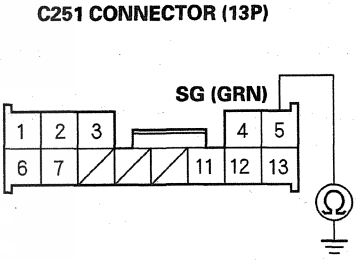

Is there continuity?

YES—Go to step 18.

NO—Repair open in the wire between the throttle body and the C251 connector (SG line), then go to step 22.

18. Disconnect the throttle actuator control module 16P connector (see page 11-282).

19. Check for continuity between throttle actuator control module 16P connector terminal No. 9 and C251 connector (13P) terminal No. 5.

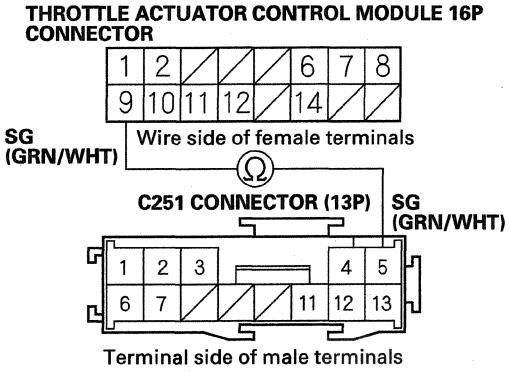

Is there continuity?

YES—Go to step 27.

NO—Repair open in the wire between the throttle actuator control module (SG line) and the C251 connector, then go to step 22.

20. Turn the ignition switch to LOCK (0).

21. Replace the throttle body (see page 11-369).

22. Reconnect all connectors.

23. Turn the ignition switch to ON (II).

24. Reset the PCM with the HDS.

25. Do the PCM idle learn procedure (see page 11-313).

26. Check for Pending or Confirmed DTCs with the HDS.

Is DTC P0223 indicated?

YES—Check for poor connections or loose terminals at the throttle body and the throttle actuator control module, then go to step 1.

NO—Troubleshooting is complete. If any other Pending or Confirmed DTCs are indicated, go to the indicated DTC's troubleshooting. ■

27. Reconnect all connectors.

28. Update the PCM if it does not have the latest software (see page 11-230), or substitute a known-good PCM (see page 11-7).

29. Check for Pending or Confirmed DTCs with the HDS.

Is DTC P0223 indicated?

YES—Check for poor connections or loose terminals at the throttle body and the throttle actuator control module. If the PCM was updated, substitute a known-good PCM (see page 11-7), then recheck. If the PCM was substituted, go to step 1.

NO—If the PCM was updated, troubleshooting is complete. If the PCM was substituted, replace the original PCM (see page 11-232). If any other Pending or Confirmed DTCs are indicated, go to the indicated DTC's troubleshooting. ■

DTC Troubleshooting (cont'd)

DTC P1683: Throttle Valve Default Position Spring Performance Problem

⚠CAUTION

Do not insert your fingers into the installed throttle body when you turn the ignition switch to ON (II) or while the ignition switch is in ON (II). If you do, you will seriously injure your fingers if the throttle valve is activated.

NOTE: Before you troubleshoot, record all freeze data and any on-board snapshot, and review the general troubleshooting information (see page 11-3).

1. Turn the ignition switch to ON (II).
2. Clear the DTC with the HDS.
3. Start the engine. Hold the engine speed at 3,000 rpm without load (in P or N) until the radiator fan comes on, then let it idle.
4. Turn the ignition switch to LOCK (0), and wait 10 seconds.
5. Turn the ignition switch to ON (II).
6. Check for Pending or Confirmed DTCs with the HDS.

   Is DTC P1683 indicated?

   YES—Go to step 7.

   NO—Intermittent failure, the system is OK at this time. Check for poor connections or loose terminals at the throttle body and the throttle actuator control module. ■
7. Turn the ignition switch to LOCK (0).
8. Disconnect the intake air duct from the throttle body.
9. Push the throttle valve closed as shown.

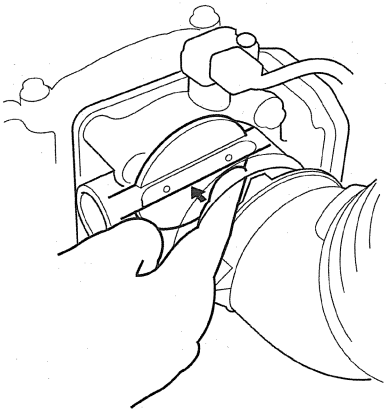

10. Release the throttle valve.

    Does the throttle valve return?

    YES—Clean the throttle body (see page 11-366), then go to step 12 and recheck. If DTC P1683 is indicated, go to step 11.

    NO—Go to step 11.
11. Replace the throttle body (see page 11-369).
12. Turn the ignition switch to ON (II).
13. Reset the PCM with the HDS.
14. Do the PCM idle learn procedure (see page 11-313).
15. Turn the ignition switch to LOCK (0), and wait 10 seconds.
16. Turn the ignition switch to ON (II).
17. Check for Pending or Confirmed DTCs with the HDS.

    Is DTC P1683 indicated?

    YES—Check for poor connections or loose terminals at the throttle body and the throttle actuator control module, then go to step 1.

    NO—Troubleshooting is complete. If any other Pending or Confirmed DTCs are indicated, go to the indicated DTC's troubleshooting. ■

DTC P1684: Throttle Valve Return Spring Performance Problem

⚠CAUTION

Do not insert your fingers into the installed throttle body when you turn the ignition switch to ON (II) or while the ignition switch is in ON (II). If you do, you will seriously injure your fingers if the throttle valve is activated.

NOTE: Before you troubleshoot, record all freeze data and any on-board snapshot, and review the general troubleshooting information (see page 11-3).

1. Turn the ignition switch to ON (II).
2. Clear the DTC with the HDS.
3. Start the engine. Hold the engine speed at 3,000 rpm without load (in P or N) until the radiator fan comes on, then let it idle.
4. Turn the ignition switch to LOCK (0), and wait 10 seconds.
5. Turn the ignition switch to ON (II).
6. Check for Pending or Confirmed DTCs with the HDS.

   Is DTC P1684 indicated?

   YES—Go to step 7.

   NO—Intermittent failure, the system is OK at this time. Check for poor connections or loose terminals at the throttle body and the throttle actuator control module.■
7. Turn the ignition switch to LOCK (0).
8. Disconnect the intake air duct from the throttle body.
9. Push the throttle valve open as shown.

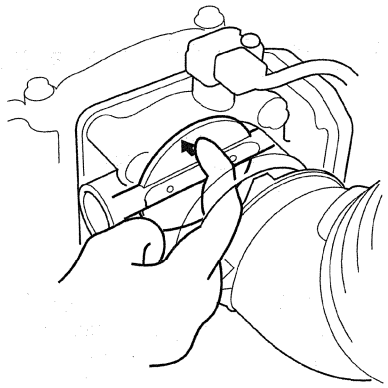

10. Release the throttle valve.

    Does the throttle valve return?

    YES—Clean the throttle body (see page 11-366), then go to step 12 and recheck. If DTC P1684 is indicated, go to step 11.

    NO—Go to step 11.
11. Replace the throttle body (see page 11-369).
12. Turn the ignition switch to ON (II).
13. Reset the PCM with the HDS.
14. Do the PCM idle learn procedure (see page 11-313).
15. Turn the ignition switch to LOCK (0), and wait 10 seconds.
16. Turn the ignition switch to ON (II).
17. Check for Pending or Confirmed DTCs with the HDS.

    Is DTC P1684 indicated?

    YES—Check for poor connections or loose terminals at the throttle body and the throttle actuator control module, then go to step 1.

    NO—Troubleshooting is complete. If any other Pending or Confirmed DTCs are indicated, go to the indicated DTC's troubleshooting.■

DTC Troubleshooting (cont'd)

DTC P2101: Throttle Actuator System Malfunction

⚠CAUTION

Do not insert your fingers into the installed throttle body when you turn the ignition switch to ON (II) or while the ignition switch is in ON (II). If you do, you will seriously injure your fingers if the throttle valve is activated.

NOTE: Before you troubleshoot, record all freeze data and any on-board snapshot, and review the general troubleshooting information (see page 11-3).

1. Turn the ignition switch to ON (II).
2. Clear the DTC with the HDS.
3. Do the ETCS TEST in the INSPECTION MENU with the HDS.
4. Check for Pending or Confirmed DTCs with the HDS.

   Is DTC P2101 indicated?

   YES—Go to step 7.

   NO—Go to step 5.
5. Test-drive the vehicle for several minutes in the range of these recorded freeze data parameters:

   • ENGINE SPEED
   • VSS
   • APP SENSOR
6. Check for Pending or Confirmed DTCs with the HDS.

   Is DTC P2101 indicated?

   YES—Go to step 7.

   NO—Intermittent failure, the system is OK at this time. Check for poor connections or loose terminals at the throttle body and the throttle actuator control module, then clean the throttle body (see page 11-366). ■
7. Turn the ignition switch to LOCK (0).
8. Disconnect the intake air duct from the throttle body.
9. Turn the ignition switch to ON (II).
10. Clear the DTC with the HDS.
11. Do the ETCS TEST in the INSPECTION MENU with the HDS.
12. Visually check the throttle valve operation.

    Does the throttle valve operate smoothly?

    YES—Clean the throttle body (see page 11-366), then go to step 22 and recheck. If DTC P2101 is indicated, go to step 20.

    NO—Go to step 13.
13. Turn the ignition switch to LOCK (0).
14. Disconnect the throttle body 6P connector.
15. Disconnect the C251 connector (13P) between the PCM subharness and the throttle actuator control module subharness.
16. Connect throttle body 6P connector terminals No. 5 and No. 6 with a jumper wire.

THROTTLE BODY 6P CONNECTOR

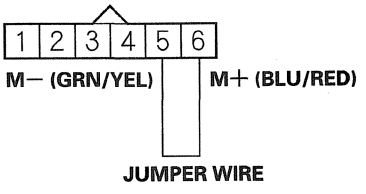

Wire side of female terminals

17. Check for continuity between C251 connector (13P) terminals No. 6 and No. 13.

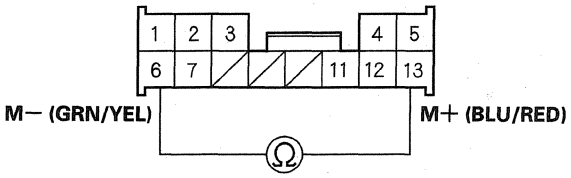

Is there continuity?

YES—Go to step 18.

NO—Repair open in the wire between the throttle body and the C251 connector (motor drive lines), then go to step 22.

18. Disconnect the throttle actuator control module 16P connector (see page 11-282).

19. Check for continuity between throttle actuator control module 16P connector terminal No. 1 and C251 connector (13P) terminal No. 13, and then between throttle actuator control module 16P connector terminals No. 8 and C251 connector (13P) terminal No. 6.

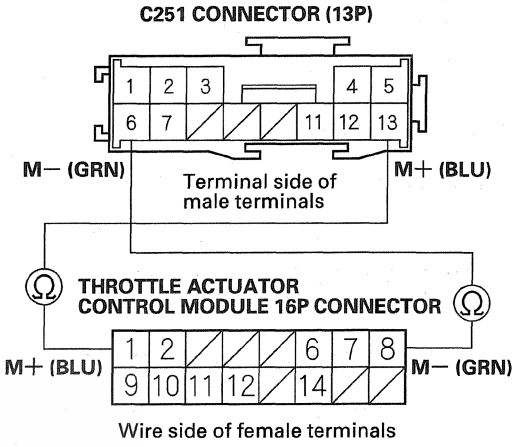

Is there continuity?

YES—Go to step 28.

NO—Repair open in the wires between the throttle actuator control module and the C251 connector (motor drive lines), then go to step 22.

20. Turn the ignition switch to LOCK (0).

21. Replace the throttle body (see page 11-369).

22. Reconnect all connectors.

23. Turn the ignition switch to ON (II).

24. Reset the PCM with the HDS.

25. Do the PCM idle learn procedure (see page 11-313).

26. Test-drive the vehicle for several minutes in the range of these recorded freeze data parameters:

- ENGINE SPEED
- VSS
- APP SENSOR

(cont'd)

DTC Troubleshooting (cont'd)

27. Check for Pending or Confirmed DTCs with the HDS.

    Is DTC P2101 indicated?

    YES—Check for poor connections or loose terminals at the throttle body and the throttle actuator control module, then clean the throttle body (see page 11-366), and go to step 1.

    NO—Troubleshooting is complete. If any other Pending or Confirmed DTCs are indicated, go to the indicated DTC's troubleshooting. ■

28. Reconnect all connectors.

29. Update the PCM if it does not have the latest software (see page 11-230), or substitute a known-good PCM (see page 11-7).

30. Check for Pending or Confirmed DTCs with the HDS.

    Is DTC P2101 indicated?

    YES—Check for poor connections or loose terminals at the throttle body and the throttle actuator control module. If the PCM was updated, substitute a known-good PCM (see page 11-7), then recheck. If the PCM was substituted, go to step 1.

    NO—If the PCM was updated, troubleshooting is complete. If the PCM was substituted, replace the original PCM (see page 11-232). If any other Pending or Confirmed DTCs are indicated, go to the indicated DTC's troubleshooting. ■

DTC P2108: Throttle Actuator Control Module Problem

NOTE: Before you troubleshoot, record all freeze data and any on-board snapshot, and review the general troubleshooting information (see page 11-3).

1. Turn the ignition switch to ON (II).
2. Clear the DTC with the HDS.
3. Turn the ignition switch to LOCK (0).
4. Turn the ignition switch to ON (II).
5. Check for Pending or Confirmed DTCs with the HDS.

   Is DTC P2108 indicated?

   YES—Substitute a known-good throttle actuator control module (see page 11-282), and recheck. If DTC P2108 is not indicated, replace the original throttle actuator control module (see page 11-282). ■

   NO—Intermittent failure, the system is OK at this time. Check for poor connections or loose terminals at the throttle body, the throttle actuator control module, and the PCM. ■

DTC P2118: Throttle Actuator Current Range/ Performance Problem

NOTE: Before you troubleshoot, record all freeze data and any on-board snapshot, and review the general troubleshooting information (see page 11-3).

1. Turn the ignition switch to ON (II).
2. Clear the DTC with the HDS.
3. Slowly press the accelerator pedal to the floor.
4. Check for Pending or Confirmed DTCs with the HDS.

   Is DTC P2118 indicated?

   YES—Go to step 5.

   NO—Intermittent failure, the system is OK at this time. Check for poor connections or loose terminals at the throttle body and the PCM. ■

5. Turn the ignition switch to LOCK (0).
6. Disconnect the C251 connector (13P) between the PCM subharness and the throttle actuator control module subharness.
7. Measure the resistance between C251 connector (13P) terminals No. 6 and No. 13.

C251 CONNECTOR (13P)

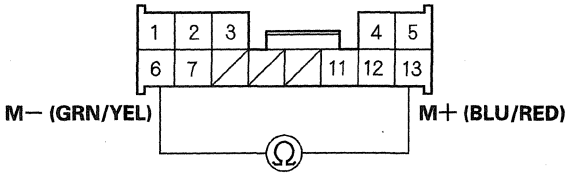

Wire side of female terminals

Is there about 1.0 Ω or less?

YES—Go to step 8.

NO—Go to step 10.

8. Disconnect the throttle body 6P connector.
9. Measure the resistance between throttle body 6P connector terminals No. 5 and No. 6 with the throttle fully closed.

THROTTLE BODY 6P CONNECTOR

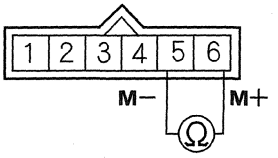

Terminal side of male terminals

Is there about 1.0 Ω or less?

YES—Go to step 12.

NO—Repair short in the wires between the throttle body and the C251 connector (motor drive lines), then go to step 13.

10. Disconnect the throttle actuator control module 16P connector (see page 11-282).

(cont'd)

DTC Troubleshooting (cont'd)

11. Check for continuity between body ground and C251 connector (13P) terminals No. 6 and No. 13 individually.

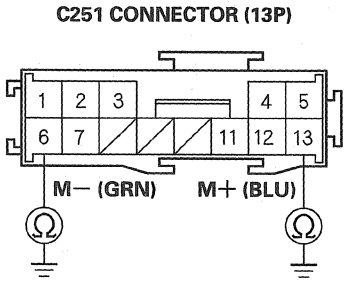

Terminal side of male terminals

Is there continuity?

YES—Repair short in the wires between the throttle actuator control module and the C251 connector (motor drive lines), then go to step 8.

NO—Go to step 21.

12. Replace the throttle body (see page 11-369).
13. Reconnect all connectors.
14. Turn the ignition switch to ON (II).
15. Reset the PCM with the HDS.
16. Do the PCM idle learn procedure (see page 11-313).
17. Turn the ignition switch to LOCK (0).
18. Turn the ignition switch to ON (II).
19. Slowly press the accelerator pedal to the floor.
20. Check for Pending or Confirmed DTCs with the HDS.

Is DTC P2118 indicated?

YES—Check for poor connections or loose terminals at the throttle body and the throttle actuator control module, then go to step 1.

NO—Troubleshooting is complete. If any other Pending or Confirmed DTCs are indicated, go to the indicated DTC's troubleshooting. ■

21. Reconnect all connectors.
22. Update the PCM if it does not have the latest software (see page 11-230), or substitute a known-good PCM (see page 11-7).
23. Turn the ignition switch to LOCK (0).
24. Turn the ignition switch to ON (II).
25. Slowly press the accelerator pedal to the floor.
26. Check for Pending or Confirmed DTCs with the HDS.

Is DTC P2118 indicated?

YES—Check for poor connections or loose terminals at the throttle body and the throttle actuator control module. If the PCM was updated, substitute a known-good PCM (see page 11-7), then recheck. If the PCM was substituted, go to step 1.

NO—If the PCM was updated, troubleshooting is complete. If the PCM was substituted, replace the original PCM (see page 11-232). If any other Pending or Confirmed DTCs are indicated, go to the indicated DTC's troubleshooting. ■

DTC P2122: APP Sensor A (TP Sensor D) Circuit Low Voltage

NOTE: Before you troubleshoot, record all freeze data and any on-board snapshot, and review the general troubleshooting information (see page 11-3).

1. Turn the ignition switch to ON (II).
2. Check APP SENSOR A in the DATA LIST with the HDS.

   Is there about 0.1 V or less?

   YES—Go to step 3.

   NO—Intermittent failure, the system is OK at this time. Check for poor connections or loose terminals at APP sensor A and the PCM. ■
3. Turn the ignition switch to LOCK (0).
4. Disconnect the APP sensor 6P connector.
5. Turn the ignition switch to ON (II).
6. Measure the voltage between APP sensor 6P connector terminals No. 2 and No. 3.

APP SENSOR 6P CONNECTOR

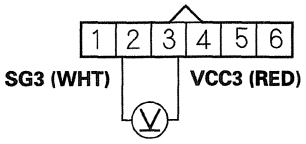

Wire side of female terminals

Is there about 5 V?

YES—Go to step 7.

NO—Go to step 17.

7. Turn the ignition switch to LOCK (0).
8. Jump the SCS line with the HDS.
9. Disconnect PCM connector D (17P).
10. Check for continuity between APP sensor 6P connector terminal No. 1 and body ground.

APP SENSOR 6P CONNECTOR

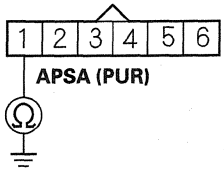

Wire side of female terminals

Is there continuity?

YES—Repair short in the wire between APP sensor A and the PCM (D3), then go to step 20.

NO—Go to step 11.

11. Connect PCM connector terminal D3 to body ground with a jumper wire.

PCM CONNECTOR D (17P)

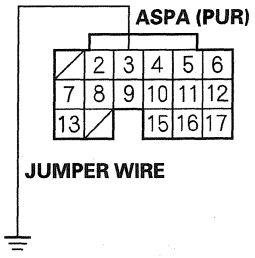

Wire side of female terminals

(cont'd)

DTC Troubleshooting (cont'd)

12. Check for continuity between APP sensor 6P connector terminal No. 1 and body ground.

APP SENSOR 6P CONNECTOR

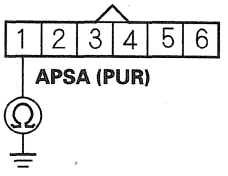

Wire side of female terminals

Is there continuity?

YES—Go to step 13.

NO—Repair open in the wire between APP sensor A and the PCM (D3), then go to step 20.

13. Reconnect PCM connector D (17P).

14. Connect APP sensor 6P connector terminals No. 1 and No. 3 with a jumper wire.

APP SENSOR 6P CONNECTOR

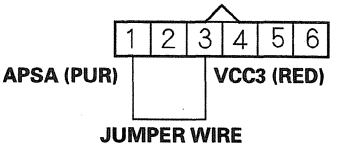

Wire side of female terminals

15. Turn the ignition switch to ON (II).

16. Check APP SENSOR A in the DATA LIST with the HDS.

Is there about 0.1 V or less?

YES—Go to step 25.

NO—Go to step 18.

17. Measure the voltage between PCM connector terminals D2 and D7.

PCM CONNECTOR D (17P)

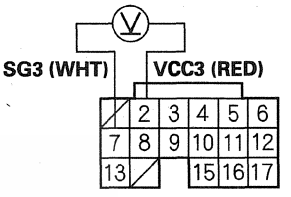

Wire side of female terminals

Is there about 5 V?

YES—Repair open in the wire between the PCM (D22) and APP sensor A, then go to step 20.

NO—Go to step 25.

18. Turn the ignition switch to LOCK (0).

19. Replace the accelerator pedal module (see page 11-282).

20. Reconnect all connectors.

21. Turn the ignition switch to ON (II).

22. Reset the PCM with the HDS.

23. Do the PCM idle learn procedure (see page 11-313).

24. Check for Pending or Confirmed DTCs with the HDS.

    Is DTC P2122 indicated?

    YES—Check for poor connections or loose terminals at APP sensor A and the PCM, then go to step 1.

    NO—Troubleshooting is complete. If any other Pending or Confirmed DTCs are indicated, go to the indicated DTC's troubleshooting. ■

25. Turn the ignition switch to LOCK (0).

26. Reconnect all connectors.

27. Update the PCM if it does not have the latest software (see page 11-230), or substitute a known-good PCM (see page 11-7).

28. Check for Pending or Confirmed DTCs with the HDS.

    Is DTC P2122 indicated?

    YES—Check for poor connections or loose terminals at APP sensor A and the PCM. If the PCM was updated, substitute a known-good PCM (see page 11-7), then recheck. If the PCM was substituted, go to step 1.

    NO—If the PCM was updated, troubleshooting is complete. If the PCM was substituted, replace the original PCM (see page 11-232). If any other Pending or Confirmed DTCs are indicated, go to the indicated DTC's troubleshooting. ■

DTC P2123: APP Sensor A (TP Sensor D) Circuit High Voltage

NOTE: Before you troubleshoot, record all freeze data and any on-board snapshot, and review the general troubleshooting information (see page 11-3).

1. Turn the ignition switch to ON (II).

2. Check APP SENSOR A in the DATA LIST with the HDS.

   Is there about 4.9 V or more?

   YES—Go to step 3.

   NO—Intermittent failure, the system is OK at this time. Check for poor connections or loose terminals at APP sensor A and the PCM. ■

3. Turn the ignition switch to LOCK (0).

4. Disconnect the APP sensor 6P connector.

5. Turn the ignition switch to ON (II).

6. Measure the voltage between APP sensor 6P connector terminals No. 2 and No. 3.

APP SENSOR 6P CONNECTOR

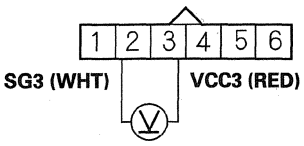

Wire side of female terminals

Is there about 5 V?

YES—Go to step 8.

NO—Go to step 7.

(cont'd)

DTC Troubleshooting (cont'd)

7. Measure the voltage between PCM connector terminals D2 and D7.

PCM CONNECTOR D (17P)

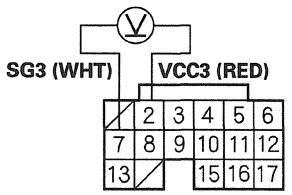

Wire side of female terminals

Is there about 5 V?

YES—Repair open in the wire between the PCM (D7) and APP sensor A, then go to step 10.

NO—Go to step 15.

8. Turn the ignition switch to LOCK (0).
9. Replace the accelerator pedal module (see page 11-282).
10. Reconnect all connectors.
11. Turn the ignition switch to ON (II).
12. Reset the PCM with the HDS.
13. Do the idle learn procedure (see page 11-313).
14. Check for Pending or Confirmed DTCs with the HDS.

Is DTC P2123 indicated?

YES—Check for poor connections or loose terminals at APP sensor A and the PCM, then go to step 1.

NO—Troubleshooting is complete. If any other Pending or Confirmed DTCs are indicated, go to the indicated DTC's troubleshooting. ■

15. Turn the ignition switch to LOCK (0).
16. Reconnect all connectors.
17. Update the PCM if it does not have the latest software (see page 11-230), or substitute a known-good PCM (see page 11-7).
18. Check for Pending or Confirmed DTCs with the HDS.

Is DTC P2123 indicated?

YES—Check for poor connections or loose terminals at APP sensor A and the PCM. If the PCM was updated, substitute a known-good PCM (see page 11-7), then recheck. If the PCM was substituted, go to step 1.

NO—If the PCM was updated, troubleshooting is complete. If the PCM was substituted, replace the original PCM (see page 11-232). If any other Pending or Confirmed DTCs are indicated, go to the indicated DTC's troubleshooting. ■

DTC P2127: APP Sensor B (TP Sensor E) Circuit Low Voltage

NOTE: Before you troubleshoot, record all freeze data and any on-board snapshot, and review the general troubleshooting information (see page 11-3).

1. Turn the ignition switch to ON (II).
2. Check APP SENSOR A in the DATA LIST with the HDS.

   Is there about 0.1 V or less?

   YES—Go to step 3.

   NO—Intermittent failure, the system is OK at this time. Check for poor connections or loose terminals at APP sensor B and the PCM. ■
3. Turn the ignition switch to LOCK (0).
4. Disconnect the APP sensor 6P connector.
5. Turn the ignition switch to ON (II).
6. Measure the voltage between APP sensor 6P connector terminals No. 5 and No. 6.

APP SENSOR 6P CONNECTOR

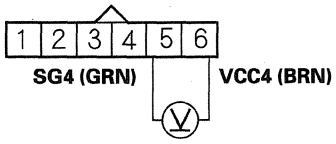

Wire side of female terminals

Is there about 5 V?

YES—Go to step 7.

NO—Go to step 17.

7. Turn the ignition switch to LOCK (0).
8. Jump the SCS line with the HDS.
9. Disconnect PCM connector D (17P).
10. Check for continuity between APP sensor 6P connector terminal No. 4 and body ground.

APP SENSOR 6P CONNECTOR

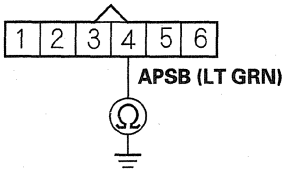

Wire side of female terminals

Is there continuity?

YES—Repair short in the wire between APP sensor B and the PCM (D9), then go to step 20.

NO—Go to step 11.

11. Connect PCM connector terminal D9 to body ground with a jumper wire.

PCM CONNECTOR D (17P)

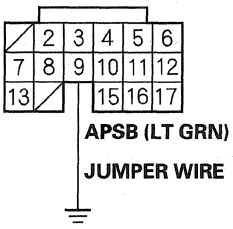

Wire side of female terminals

(cont'd)

DTC Troubleshooting (cont'd)

12. Check for continuity between APP sensor 6P connector terminal No. 4 and body ground.

APP SENSOR 6P CONNECTOR

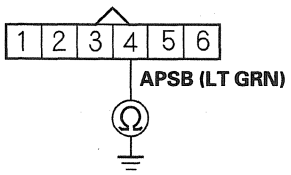

Wire side of female terminals

Is there continuity?

YES—Go to step 13.

NO—Repair open in the wire between APP sensor B and the PCM (D9), then go to step 20.

13. Reconnect PCM connector D (17P).

14. Connect APP sensor 6P connector terminals No. 4 and No. 6 with a jumper wire.

APP SENSOR 6P CONNECTOR

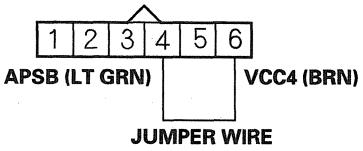

Wire side of female terminals

15. Turn the ignition switch to ON (II).

16. Check APP SENSOR B in the DATA LIST with the HDS.

Is there about 0.1 V or less?

YES—Go to step 25.

NO—Go to step 18.

17. Measure the voltage between PCM connector terminals E1 and E12.

PCM CONNECTOR E (31P)

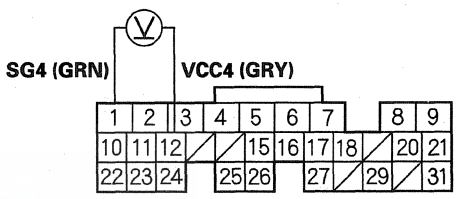

Wire side of female terminals

Is there about 5 V?

YES—Repair open in the wire between the PCM (E12) and APP sensor B, then go to step 20.

NO—Go to step 25.

18. Turn the ignition switch to LOCK (0).

19. Replace the accelerator pedal module (see page 11-282).

20. Reconnect all connectors.

21. Turn the ignition switch to ON (II).

22. Reset the PCM with the HDS.

23. Do the PCM idle learn procedure (see page 11-313).

24. Check for Pending or Confirmed DTCs with the HDS.

    Is DTC P2127 indicated?

    YES—Check for poor connections or loose terminals at APP sensor B and the PCM, then go to step 1.

    NO—Troubleshooting is complete. If any other Pending or Confirmed DTCs are indicated, go to the indicated DTC's troubleshooting. ■

25. Turn the ignition switch to LOCK (0).

26. Reconnect all connectors.

27. Update the PCM if it does not have the latest software (see page 11-230), or substitute a known-good PCM (see page 11-7).

28. Check for Pending or Confirmed DTCs with the HDS.

    Is DTC P2127 indicated?

    YES—Check for poor connections or loose terminals at APP sensor B and the PCM. If the PCM was updated, substitute a known-good PCM (see page 11-7), then recheck. If the PCM was substituted, go to step 1.

    NO—If the PCM was updated, troubleshooting is complete. If the PCM was substituted, replace the original PCM (see page 11-232). If any other Pending or Confirmed DTCs are indicated, go to the indicated DTC's troubleshooting. ■

DTC P2128: APP Sensor B (TP Sensor E) Circuit High Voltage

NOTE: Before you troubleshoot, record all freeze data and any on-board snapshot, and review the general troubleshooting information (see page 11-3).

1. Turn the ignition switch to ON (II).

2. Check APP SENSOR B in the DATA LIST with the HDS.

    Is there about 4.9 V or more?

    YES—Go to step 3.

    NO—Intermittent failure, the system is OK at this time. Check for poor connections or loose terminals at APP sensor B and the PCM. ■

3. Turn the ignition switch to LOCK (0).

4. Disconnect the APP sensor 6P connector.

5. Turn the ignition switch to ON (II).

6. Measure the voltage between APP sensor 6P connector terminals No. 5 and No. 6.

APP SENSOR 6P CONNECTOR

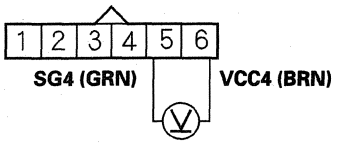

Wire side of female terminals

Is there about 5 V?

YES—Go to step 8.

NO—Go to step 7.

(cont'd)

DTC Troubleshooting (cont'd)

7. Measure the voltage between PCM connector terminals E1 and E12.

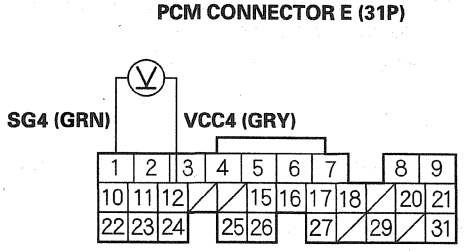

Wire side of female terminals

Is there about 5 V?

YES—Repair open in the wire between the PCM (E1) and APP sensor B, then go to step 10.

NO—Go to step 15.

8. Reconnect all connectors.
9. Turn the ignition switch to ON (II).
10. Replace the accelerator pedal module (see page 11-282).
11. Turn the ignition switch to ON (II).
12. Reset the PCM with the HDS.
13. Do the PCM idle learn procedure (see page 11-313).
14. Check for Pending or Confirmed DTCs with the HDS.

    Is DTC P2128 indicated?

    YES—Check for poor connections or loose terminals at APP sensor B and the PCM, then go to step 1.

    NO—Troubleshooting is complete. If any other Pending or Confirmed DTCs are indicated, go to the indicated DTC's troubleshooting. ■
15. Turn the ignition switch to LOCK (0).
16. Reconnect all connectors.
17. Update the PCM if it does not have the latest software (see page 11-230), or substitute a known-good PCM (see page 11-7).
18. Check for Pending or Confirmed DTCs with the HDS.

    Is DTC P2128 indicated?

    YES—Check for poor connections or loose terminals at APP sensor B and the PCM. If the PCM was updated, substitute a known-good PCM (see page 11-7), then recheck. If the PCM was substituted, go to step 1.

    NO—If the PCM was updated, troubleshooting is complete. If the PCM was substituted, replace the original PCM (see page 11-232). If any other Pending or Confirmed DTCs are indicated, go to the indicated DTC's troubleshooting. ■

DTC P2135: TP Sensor A/B Incorrect Voltage Correlation

⚠CAUTION

Do not insert your fingers into the installed throttle body when you turn the ignition switch to ON (II) or while the ignition switch is in ON (II). If you do, you will seriously injure your fingers if the throttle valve is activated.

NOTE: Before you troubleshoot, record all freeze data and any on-board snapshot, and review the general troubleshooting information (see page 11-3).

1. Turn the ignition switch to ON (II).
2. Clear the DTC with the HDS.
3. Do the ETCS TEST in the INSPECTION MENU with the HDS.
4. Check for Pending or Confirmed DTCs with the HDS.

   Is DTC P2135 indicated?

   YES—Go to step 5.

   NO—Intermittent failure, the system is OK at this time. Check for poor connections or loose terminals at the throttle body and the throttle actuator control module. ■
5. Turn the ignition switch to LOCK (0).
6. Disconnect the intake air duct from the throttle body.
7. Turn the ignition switch to ON (II).
8. Visually check the throttle valve operation while you clear the DTC with the HDS.

   Does the valve temporarily move to its fully closed position?

   YES—Go to step 16.

   NO—Go to step 9.
9. Turn the ignition switch to LOCK (0).
10. Disconnect the C251 connector (13P) between the PCM subharness and the throttle actuator control module subharness.
11. Check for continuity between C251 connector (13P) terminals No. 2 and No. 4.

C251 CONNECTOR (13P)

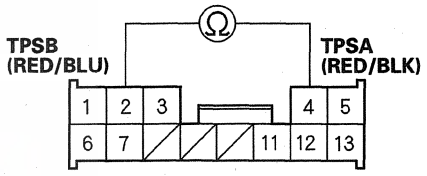

Wire side of female terminals

Is there continuity?

YES—Go to step 12.

NO—Go to step 14.

12. Disconnect the throttle body 6P connector.

(cont'd)

DTC Troubleshooting (cont'd)

13. Check for continuity between C251 connector (13P) terminals No. 2 and No. 4.

C251 CONNECTOR (13P)

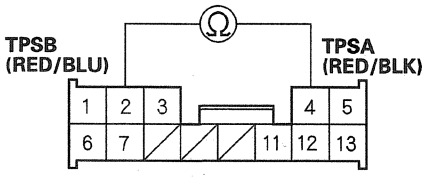

Wire side of female terminals

Is there continuity?

YES—Repair short in the wires between the TPSA line and the TPSB line, then go to step 18.

NO—Go to step 16.

14. Disconnect the throttle actuator control module 16P connector (see page 11-282).

15. Check for continuity between C251 connector (13P) terminals No. 2 and No. 4.

C251 CONNECTOR (13P)

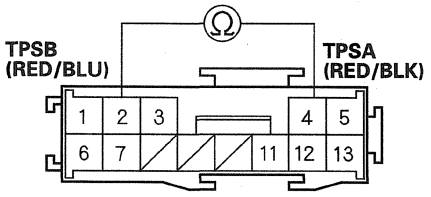

Terminal side of male terminals

Is there continuity?

YES—Repair short in the wires between the TPSA line and the TPSB line of the throttle actuator control module subharness, then go to step 18.

NO—Go to step 23.

16. Turn the ignition switch to LOCK (0).

17. Replace the throttle body (see page 11-369).

18. Reconnect all connectors.

19. Turn the ignition switch to ON (II).

20. Reset the PCM with the HDS.

21. Do the PCM idle learn procedure (see page 11-313).

22. Check for Pending or Confirmed DTCs with the HDS.

Is DTC P2135 indicated?

YES—Check for poor connections or loose terminals at the throttle body and the throttle actuator control module, then go to step 1.

NO—Troubleshooting is complete. If any other Pending or Confirmed DTCs are indicated, go to the indicated DTC's troubleshooting. ■

23. Reconnect all connectors.

24. Update the PCM if it does not have the latest software (see page 11-230), or substitute a known-good PCM (see page 11-7).

25. Check for Pending or Confirmed DTCs with the HDS.

Is DTC P2135 indicated?

YES—Check for poor connections or loose terminals at the throttle body and the throttle actuator control module. If the PCM was updated, substitute a known-good PCM (see page 11-7), then recheck. If the PCM was substituted, go to step 1.

NO—If the PCM was updated, troubleshooting is complete. If the PCM was substituted, replace the original PCM (see page 11-232). If any other Pending or Confirmed DTCs are indicated, go to the indicated DTC's troubleshooting. ■

DTC P2138: APP Sensor A/B (TP Sensor D/E) Incorrect Voltage Correlation

NOTE: Before you troubleshoot, record all freeze data and any on-board snapshot, and review the general troubleshooting information (see page 11-3).

1. Turn the ignition switch to ON (II).
2. Clear the DTC with HDS.
3. Press the accelerator pedal to the floor.
4. Check for Pending or Confirmed DTCs with the HDS.

   Is DTC P2138 indicated?

   YES—Go to step 5.

   NO—Intermittent failure, the system is OK at this time. Check for poor connections or loose terminals at the APP sensor and the PCM. ■
5. Check APP SENSOR A and APP SENSOR B in the DATA LIST with the HDS.

   Are they the same voltage?

   YES—Go to step 6.

   NO—Go to step 12.
6. Turn the ignition switch to LOCK (0).
7. Jump the SCS line with the HDS.
8. Disconnect PCM connector D (17P).
9. Check for continuity between PCM connector terminals D3 and D9.

PCM CONNECTOR D (17P)

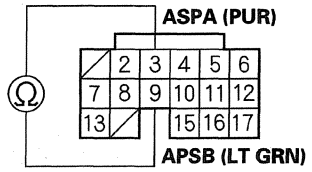

Wire side of female terminals

Is there continuity?

YES—Go to step 10.

NO—Go to step 22.

10. Disconnect the APP sensor 6P connector.
11. Check for continuity between PCM connector terminals D3 and D9.

PCM CONNECTOR D (17P)

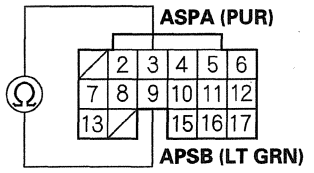

Wire side of female terminals

Is there continuity?

YES—Repair short in the wires between PCM connector terminals D3 (APSA line) and D4 (APSB line), then go to step 14.

NO—Go to step 13.

(cont'd)

DTC Troubleshooting (cont'd)

12. Turn the ignition switch to LOCK (0).
13. Replace the accelerator pedal module (see page 11-282).
14. Reconnect all connectors.
15. Turn the ignition switch to ON (II).
16. Reset the PCM with the HDS.
17. Do the PCM idle learn procedure (see page 11-313).
18. Turn the ignition switch to LOCK (0).
19. Turn the ignition switch to ON (II).
20. Press the accelerator pedal to the floor.
21. Check for Pending or Confirmed DTCs with the HDS.

    Is DTC P2138 indicated?

    YES—Check for poor connections or loose terminals at APP sensor A/B and the PCM, then go to step 1.

    NO—Troubleshooting is complete. If any other Pending or Confirmed DTCs are indicated, go to the indicated DTC's troubleshooting. ■
22. Reconnect all connectors.
23. Update the PCM if it does not have the latest software (see page 11-230), or substitute a known-good PCM (see page 11-7).
24. Turn the ignition switch to LOCK (0).
25. Turn the ignition switch to ON (II).
26. Press the accelerator pedal to the floor.
27. Check for Pending or Confirmed DTCs with the HDS.

    Is DTC P2138 indicated?

    YES—Check for poor connections or loose terminals at APP sensor A/B and the PCM. If the PCM was updated, substitute a known-good PCM (see page 11-7), then go to step 24. If the PCM was substituted, go to step 1.

    NO—If the PCM was updated, troubleshooting is complete. If the PCM was substituted, replace the original PCM (see page 11-232). If any other Pending or Confirmed DTCs are indicated, go to the indicated DTC's troubleshooting. ■

DTC P2176: Throttle Actuator Control System Idle Position Not Learned

⚠CAUTION

Do not insert your fingers into the installed throttle body when you turn the ignition switch to ON (II) or while the ignition switch is in ON (II). If you do, you will seriously injure your fingers if the throttle valve is activated.

NOTE:
- Before you troubleshoot, record all freeze data and any on-board snapshot, and review the general troubleshooting information (see page 11-3).
- If DTC P2135 or P2552 is stored at the same time as DTC P2176, troubleshoot DTC P2135 or P2552 first, then recheck for DTC P2176.

1. Turn the ignition switch to ON (II).
2. Clear the DTC with the HDS.
3. Turn the ignition switch to LOCK (0).
4. Turn the ignition switch to ON (II), and wait 10 seconds.
5. Check for Pending or Confirmed DTCs with the HDS.

   Is DTC P2176 indicated?

   YES—Go to step 6.

   NO—Intermittent failure, the system is OK at this time. Check for poor connections or loose terminals at the throttle body and the throttle actuator control module, then clean the throttle body (see page 11-366). ■
6. Turn the ignition switch to LOCK (0).
7. Disconnect the intake air duct from the throttle body.
8. Turn the ignition switch to ON (II).
9. Clear the DTC with the HDS.
10. Visually check the throttle valve operation while performing the ETCS TEST in the INSPECTION MENU with the HDS.

    Does the throttle valve move to its fully closed position?

    YES—Go to step 11.

    NO—Go to step 12.
11. Check for sludge or carbon on the throttle valve.

    Is there sludge or carbon on the throttle valve?

    YES—Clean the throttle body (see page 11-366), then go to step 22 and recheck.

    NO—Go to step 19.
12. Turn the ignition switch to LOCK (0).
13. Disconnect the throttle body 6P connector.
14. Disconnect the C251 connector (13P) between the PCM subharness and the throttle actuator control module subharness.

(cont'd)

DTC Troubleshooting (cont'd)

15. Connect throttle body 6P connector terminals No. 5 and No. 6 with a jumper wire.

THROTTLE BODY 6P CONNECTOR

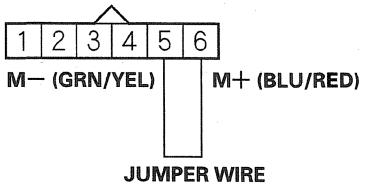

Wire side of female terminals

16. Check for continuity between C251 connector (13P) terminals No. 6 and No. 13.

C251 CONNECTOR (13P)

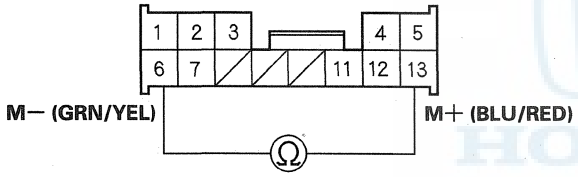

Wire side of female terminals

Is there continuity?

YES—Go to step 17.

NO—Repair open in the wires between the throttle body and the C251 connector (motor drive lines), then go to step 21.

17. Disconnect the throttle actuator control module 16P connector (see page 11-282).

18. Check for continuity between throttle actuator control module 16P connector terminal No. 1 and C251 connector (13P) terminal No. 13, and then between throttle actuator control module 16P connector terminals No. 8 and C251 connector (13P) terminal No. 6.

C251 CONNECTOR (13P)

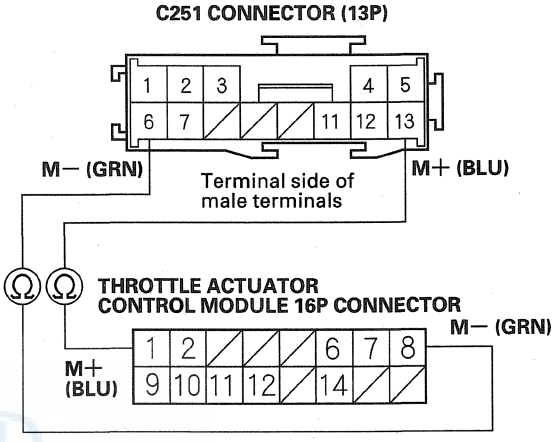

Wire side of female terminals

Is there continuity?

YES—Go to step 28.

NO—Repair open in the wires between the throttle actuator control module and the C251 connector (motor drive lines), then go to step 21.

19. Turn the ignition switch to LOCK (0).
20. Replace the throttle body (see page 11-369).
21. Reconnect all connectors.
22. Turn the ignition switch to ON (II).
23. Reset the PCM with the HDS.
24. Do the PCM idle learn procedure (see page 11-313).
25. Turn the ignition switch to LOCK (0).
26. Turn the ignition switch to ON (II), and wait 10 seconds.
27. Check for Pending or Confirmed DTCs with the HDS.

    Is DTC P2176 indicated?

    YES—Check for poor connections or loose terminals at the throttle body and the throttle actuator control module, then clean the throttle body (see page 11-369), and go to step 1.

    NO—Troubleshooting is complete. If any other Pending or Confirmed DTCs are indicated, go to the indicated DTC's troubleshooting. ■
28. Reconnect all connectors.
29. Update the PCM if it does not have the latest software (see page 11-230), or substitute a known-good PCM (see page 11-7).
30. Check for Pending or Confirmed DTCs with the HDS.

    Is DTC P2176 indicated?

    YES—Check for poor connections or loose terminals at the throttle body and the throttle actuator control module. If the PCM was updated, substitute a known-good PCM (see page 11-7), then recheck. If the PCM was substituted, go to step 1.

    NO—If the PCM was updated, troubleshooting is complete. If the PCM was substituted, replace the original PCM (see page 11-232). If any other Pending or Confirmed DTCs are indicated, go to the indicated DTC's troubleshooting. ■

DTC P2552: Throttle Actuator Control Module Relay Malfunction

NOTE: Before you troubleshoot, record all freeze data and any on-board snapshot, and review the general troubleshooting information (see page 11-3).

1. Turn the ignition switch to ON (II).
2. Clear the DTC with the HDS.
3. Do the ETCS TEST in the INSPECTION MENU with the HDS.

   Is the RELAY circuit OK?

   YES—Intermittent failure, the system is OK at this time. Check for poor connections or loose terminals at the throttle actuator control module relay, the throttle actuator control module, and the PCM. ■

   NO—Go to step 4.
4. Turn the ignition switch to LOCK (0).
5. Remove the throttle actuator control module relay (A) from the passenger's under-dash fuse/relay box.

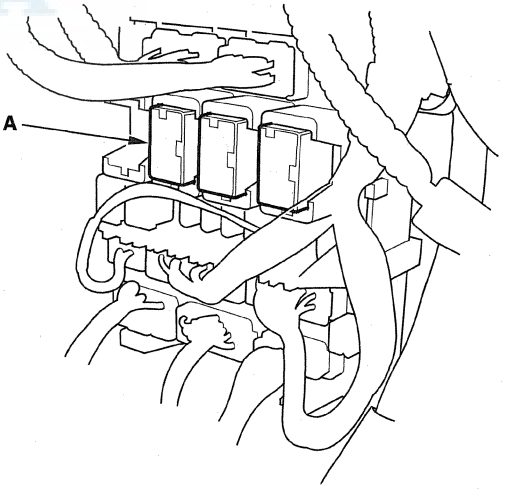

(cont'd)

DTC Troubleshooting (cont'd)

6. Test the throttle actuator control module relay (see page 22-93).

   Is the relay OK?

   YES—Go to step 7.

   NO—Replace the throttle actuator control module relay, then go to step 10.

7. Jump the SCS line with the HDS.

8. Disconnect PCM connector E (31P).

9. Check for continuity between PCM connector terminal E3 and body ground.

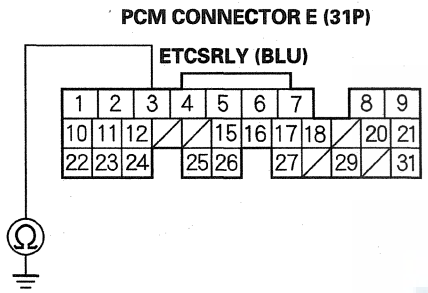

Wire side of female terminals

   Is there continuity?

   YES—Repair short in the wire between the throttle actuator control module relay and the PCM (E3), then go to step 10.

   NO—Go to step 17.

10. Reconnect PCM connector E (31P).

11. Turn the ignition switch to ON (II).

12. Reset the PCM with the HDS.

13. Do the PCM idle learn procedure (see page 11-313).

14. Turn the ignition switch to LOCK (0).

15. Turn the ignition switch to ON (II), and wait 10 seconds.

16. Check for Pending or Confirmed DTCs with the HDS.

    Is DTC P2552 indicated?

    YES—Check for poor connections or loose terminals at the throttle actuator control module, the throttle actuator control module relay, and the PCM, then go to step 1.

    NO—Troubleshooting is complete. If any other Pending or Confirmed DTCs are indicated, go to the indicated DTC's troubleshooting. ■

17. Reconnect all connectors.

18. Update the PCM if it does not have the latest software (see page 11-230), or substitute a known-good PCM (see page 11-7).

19. Check for Pending or Confirmed DTCs with the HDS.

    Is DTC P2552 indicated?

    YES—Check for poor connections or loose terminals at the throttle actuator control module, the throttle actuator control module relay, and the PCM. If the PCM was updated, substitute a known-good PCM (see page 11-7), then recheck. If the PCM was substituted, go to step 1.

    NO—If the PCM was updated, troubleshooting is complete. If the PCM was substituted, replace the original PCM (see page 11-232). If any other Pending or Confirmed DTCs are indicated, go to the indicated DTC's troubleshooting. ■

DTC U0107: Lost Communication With Throttle Actuator Control Module

⚠CAUTION

Do not insert your fingers into the installed throttle body when you turn the ignition switch to ON (II) or while the ignition switch is ON (II). If you do, you will seriously injure your fingers if the throttle valve is activated.

NOTE: Before you troubleshoot, record all freeze data and any on-board snapshot, and review the general troubleshooting information (see page 11-3).

1. Turn the ignition switch to ON (II).
2. Clear the DTC with the HDS.
3. Check for Pending or Confirmed DTCs with the HDS.

   Is DTC U0107 indicated?

   YES—Check for, and repair any poor connections or loose terminals at the throttle body, the throttle actuator control module, and the PCM, then go to step 62. If the connections and terminals are OK, go to step 6.

   NO—Go to step 4.
4. Start the engine.
5. Check for Pending or Confirmed DTCs with the HDS.

   Is DTC U0107 indicated?

   YES—Go to step 48.

   NO—Intermittent failure, the system is OK at this time. Check for poor connections or loose terminals at the throttle body, the throttle actuator control module relay, the throttle actuator control module, and the PCM. ■
6. Clear the DTC with the HDS.
7. Turn the ignition switch to LOCK (0).
8. Disconnect the intake air duct from the throttle body.
9. Press the accelerator pedal to the floor.
10. Turn the ignition switch to ON (II).
11. Check the throttle valve operation.

    Does the throttle valve open after it closes?

    YES—Go to step 12.

    NO—Go to step 13.
12. Check the throttle valve again.

    Does the throttle valve open fully?

    YES—Go to step 42.

    NO—Go to step 36.
13. Turn the ignition switch to LOCK (0).
14. Disconnect the C251 connector (13P) between the PCM subharness and the throttle actuator control module subharness.
15. Check for continuity between C251 connector (13P) terminal No. 7 and body ground.

C251 CONNECTOR (13P)

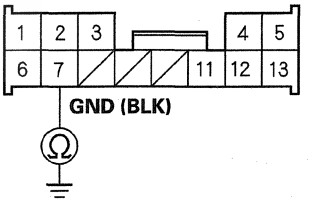

Wire side of female terminals

Is there continuity?

YES—Go to step 16.

NO—Repair open in the wire between the C251 connector and G101, then go to step 63.

(cont'd)

DTC Troubleshooting (cont'd)

16. Remove the throttle actuator control module relay (A) from the passenger's under-dash fuse/relay box.

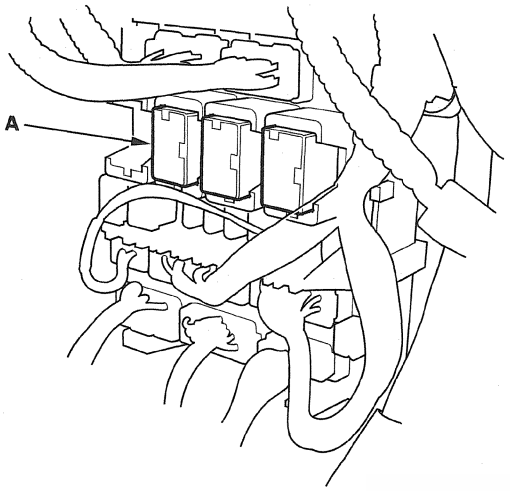

17. Measure the voltage between throttle actuator control module relay 4P connector terminal No. 1 and body ground.

THROTTLE ACTUATOR CONTROL MODULE RELAY 4P CONNECTOR

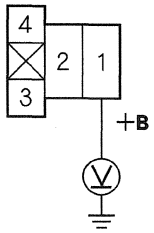

Terminal side of female terminals

Is there battery voltage?

YES—Go to step 19.

NO—Go to step 18.

18. Check the No. 1 THROTTLE ACTUATOR CONTROL (15 A) fuse in the driver's under-dash fuse/relay box.

Is the fuse OK?

YES—Repair open in the wire between the throttle actuator control module relay (+B line) and the No. 1 THROTTLE ACTUATOR CONTROL (15 A) fuse, then replace the fuse, and go to step 63.

NO—Repair short in the wire between the throttle actuator control module relay (+B line) and the No. 1 THROTTLE ACTUATOR CONTROL (15 A) fuse, then go to step 63.

19. Install the throttle actuator control module relay.

20. Turn the ignition switch to ON (II).

21. Measure the voltage between C251 connector (13P) terminal No. 12 and body ground.

C251 CONNECTOR (13P)

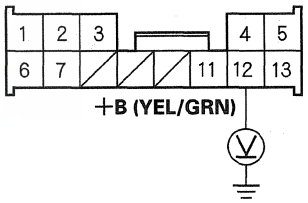

Wire side of female terminals

Is there battery voltage for about 2 seconds?

YES—Go to step 52.

NO—Go to step 22.

22. Turn the ignition switch to LOCK (0).

23. Remove the throttle actuator control module relay (A) from the passenger's under-dash fuse/relay box.

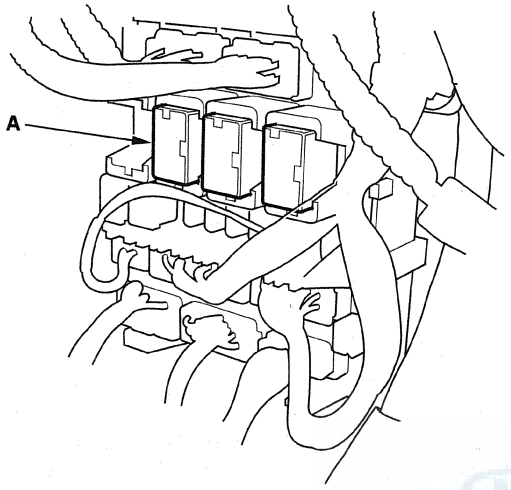

24. Test the throttle actuator control module relay (see page 22-93).

    Is the relay OK?

    YES—Go to step 25.

    NO—Replace the throttle actuator control module relay, then go to step 63.

25. Turn the ignition switch to ON (II).

26. Measure the voltage between throttle actuator control module relay 4P connector terminal No. 4 and body ground.

THROTTLE ACTUATOR CONTROL MODULE RELAY 4P CONNECTOR

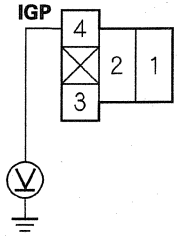

Terminal side of female terminals

Is there battery voltage?

YES—Go to step 27.

NO—Repair open in the wire between the throttle actuator control module relay and PGM-FI main relay 1 (FI MAIN), then go to step 62.

(cont'd)

DTC Troubleshooting (cont'd)

27. Turn the ignition switch to LOCK (0).

28. Jump the SCS line with the HDS.

29. Disconnect PCM connector E (31P).

30. Check for continuity between PCM connector terminal E3 and throttle actuator control module relay 4P connector terminal No. 3.

PCM CONNECTOR E (31P)

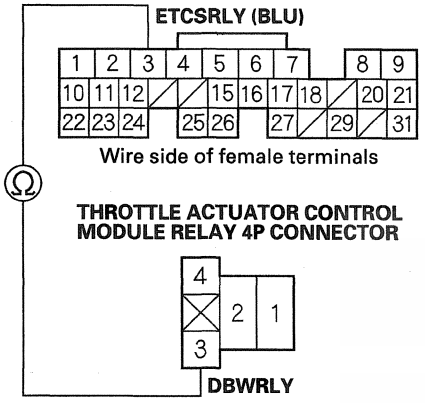

Is there continuity?

YES—Go to step 31.

NO—Repair open in the wire between the PCM (E3) and the throttle actuator control module relay, then go to step 63.

31. Check for continuity between C251 connector (13P) terminal No. 12 and body ground.

C251 CONNECTOR (13P)

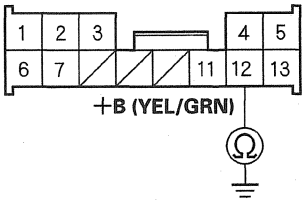

Is there continuity?

YES—Repair short in the wire between the throttle actuator control module and the throttle actuator control module relay (+B line), then go to step 63.

NO—Go to step 32.

32. Check for continuity between throttle actuator control module relay 4P connector terminal No. 2 and C251 connector (13P) terminal No. 12.

THROTTLE ACTUATOR CONTROL MODULE RELAY 4P CONNECTOR

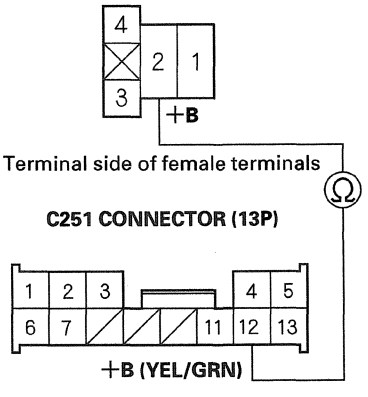

Is there continuity?

YES—Go to step 33.

NO—Repair open in the wire between the throttle actuator control module relay and the C251 connector (+B line), then go to step 63.

33. Disconnect the throttle actuator control module 16P connector (see page 11-282).

34. Check for continuity between C251 connector (13P) terminal No. 12 and body ground.

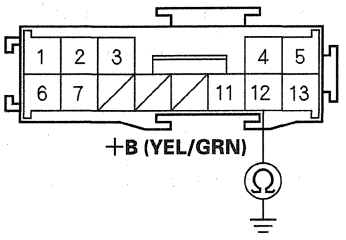

Terminal side of male terminals

Is there continuity?

YES—Repair short in the wire between the throttle actuator control module and the C251 connector, then go to step 63.

NO—Go to step 35.

35. Check for continuity between throttle actuator control module 16P connector terminal No. 2 and C251 connector (13P) terminal No. 12.

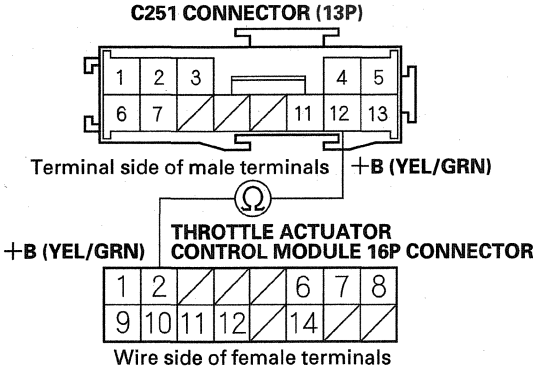

Is there continuity?

YES—Go to step 68.

NO—Repair open in the wire between the throttle actuator control module and the C251 connector, then go to step 63.

36. Turn the ignition switch to LOCK (0).

37. Jump the SCS line with the HDS.

38. Disconnect the C251 connector (13P) between the PCM subharness and the throttle actuator control module subharness.

39. Disconnect PCM connector A (31P).

40. Check for continuity between PCM connector terminals A25 and body ground.

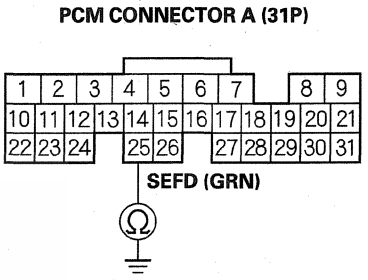

Wire side of female terminals

Is there continuity?

YES—Repair short in the wire between the PCM (A25) and the C251 connector, then go to step 63.

NO—Go to step 41.

(cont'd)

DTC Troubleshooting (cont'd)

41. Check for continuity between PCM connector terminal A25 and C251 connector (13P) terminal No. 11.

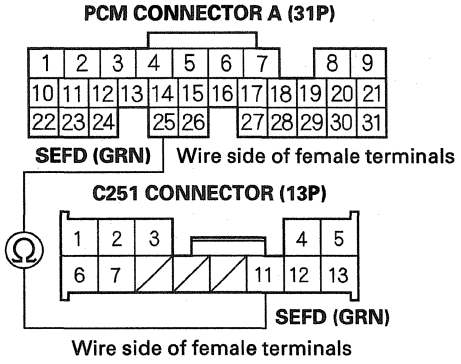

Is there continuity?

YES—Go to step 56.

NO—Repair open in the wire between the PCM (A25) and the C251 connector, then go to step 63.

42. Turn the ignition switch to LOCK (0).

43. Jump the SCS line with the HDS.

44. Disconnect the C251 connector (13P) between the PCM subharness and the throttle actuator control module subharness.

45. Disconnect PCM connector A (31P).

46. Check for continuity between PCM connector terminal A26 and body ground.

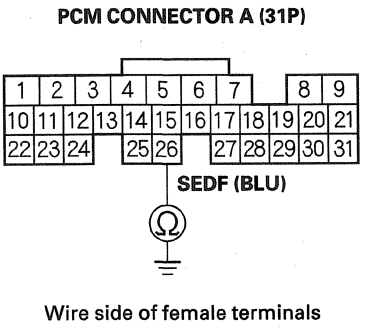

Is there continuity?

YES—Repair short in the wire between the PCM (A26) and the C251 connector, then go to step 63.

NO—Go to step 47.

47. Check for continuity between PCM connector terminal A26 and C251 connector (13P) terminal No. 1.

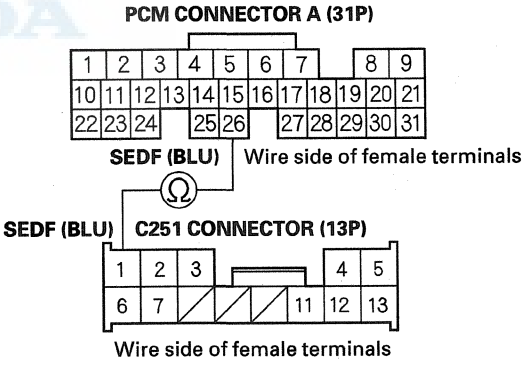

Is there continuity?

YES—Go to step 59.

NO—Repair open in the wire between the PCM (A26) and the C251 connector, then go to step 63.

48. Turn the ignition switch to LOCK (0).

49. Jump the SCS line with the HDS.

50. Disconnect PCM connectors A (31P) and B (24P).

51. Check for continuity between body ground and PCM connector terminals A3 and B15 individually.

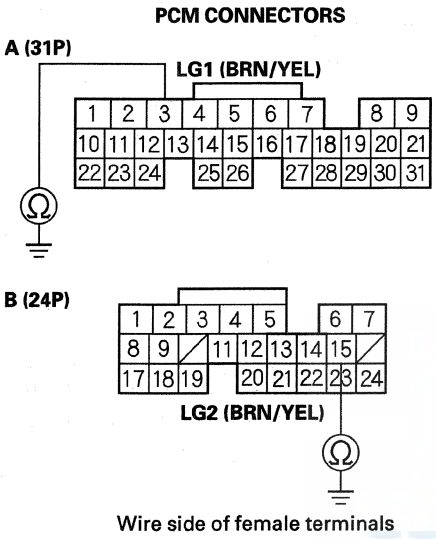

Is there continuity?

YES—Check for poor connections or loose terminals at the throttle body, the throttle actuator control module relay, the throttle actuator control module, and the PCM, then go to step 1.

NO—Repair open in the wire between the PCM (A3, B15) and G101, then go to step 63.

52. Disconnect the throttle actuator control module 16P connector (see page 11-282).

53. Check for continuity between throttle actuator control module 16P connector terminal No. 7 and C251 connector (13P) terminal No. 7.

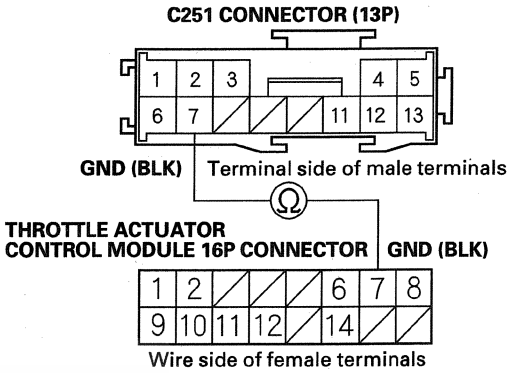

Is there continuity?

YES—Go to step 54.

NO—Repair open in the wire between the throttle actuator control module and the C251 connector, then go to step 63.

54. Check for continuity between C251 connector (13P) terminal No. 12 and body ground.

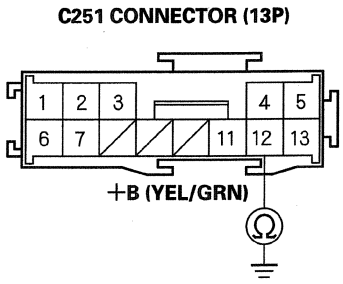

Is there continuity?

YES—Repair short in the wire between the throttle actuator control module and the C251 connector, then go to step 63.

NO—Go to step 55.

(cont'd)

DTC Troubleshooting (cont'd)

55. Check for continuity between throttle actuator control module 16P connector terminal No. 2 and C251 connector (13P) terminal No. 12.

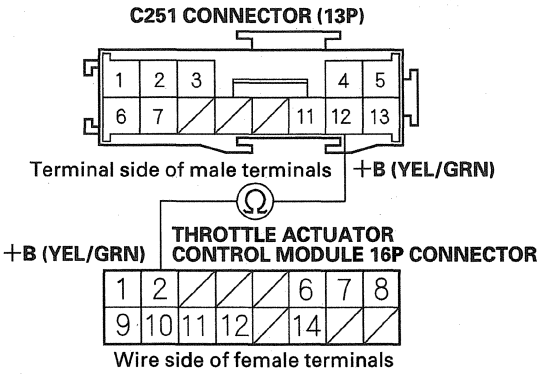

Is there continuity?

YES—Substitute a known-good throttle actuator control module (see page 11-282), then go to step 63 and recheck. If DTC U0107 is not indicated, replace the original throttle actuator control module (see page 11-282), then go to step 63.

NO—Repair open in the wire between the throttle actuator control module and the C251 connector, then go to step 63.

56. Disconnect the throttle actuator control module 16P connector (see page 11-282).

57. Check for continuity between C251 connector (13P) terminals No. 11 and body ground.

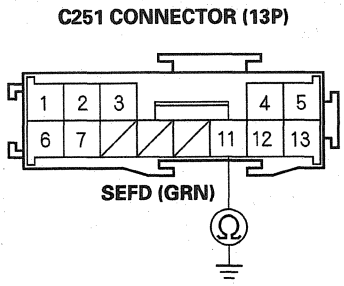

Is there continuity?

YES—Repair short in the wire between the throttle actuator control module and the C251 connector, then go to step 63.

NO—Go to step 58.

58. Check for continuity between throttle actuator control module 16P connector terminal No. 6 and C251 connector (13P) terminal No. 11.

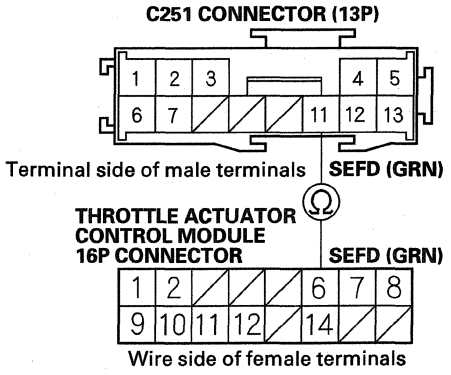

Is there continuity?

YES—Substitute a known-good throttle actuator control module (see page 11-282), then go to step 63 and recheck. If DTC U0107 is not indicated, replace the original throttle actuator control module (see page 11-282), then go to step 63.

NO—Repair open in the wire between the throttle actuator control module and the C251 connector, then go to step 63.

59. Disconnect the throttle actuator control module 16P connector (see page 11-282).

60. Check for continuity between C251 connector (13P) terminals No. 1 and body ground.

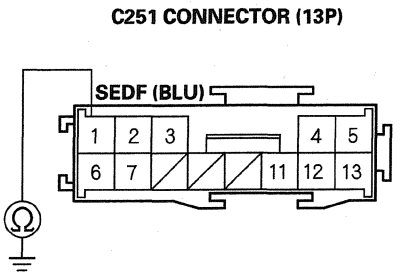

Is there continuity?

YES—Repair short in the wire between the throttle actuator control module and the C251 connector, then go to step 63.

NO—Go to step 61.

(cont'd)

DTC Troubleshooting (cont'd)

61. Check for continuity between throttle actuator control module 16P connector terminal No. 14 and C251 connector (13P) terminal No. 1.

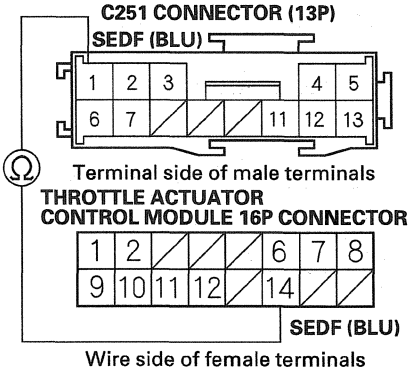

Is there continuity?

YES—Substitute a known-good throttle actuator control module (see page 11-282), then go to step 63 and recheck. If DTC U0107 is not indicated, replace the original throttle actuator control module (see page 11-282), then go to step 63.

NO—Repair open in the wire between the throttle actuator control module and the C251 connector, then go to step 63.

62. Turn the ignition switch to LOCK (0).

63. Reconnect all connectors.

64. Turn the ignition switch to ON (II).

65. Reset the PCM with the HDS.

66. Do the PCM idle learn procedure (see page 11-313).

67. Check for Pending or Confirmed DTCs with the HDS.

Is DTC U0107 indicated?

YES—Check for poor connections or loose terminals at the throttle body, the throttle actuator control module relay, the throttle actuator control module, and the PCM, then go to step 1.

NO—Troubleshooting is complete. If any other Pending or Confirmed DTCs are indicated, go to the indicated DTC's troubleshooting. ■

68. Reconnect all connectors.

69. Update the PCM if it does not have the latest software (see page 11-230), or substitute a known-good PCM (see page 11-7).

70. Check for Pending or Confirmed DTCs with the HDS.

Is DTC U0107 indicated?

YES—Check for poor connections or loose terminals at the throttle body, the throttle actuator control module relay, the throttle actuator control module, and the PCM. If the PCM was updated, substitute a known-good PCM (see page 11-7), then recheck. If the PCM was substituted, go to step 1.

NO—If the PCM was updated, troubleshooting is complete. If the PCM was substituted, replace the original PCM (see page 11-232). If any other Pending or Confirmed DTCs are indicated, go to the indicated DTC's troubleshooting. ■

APP Sensor Signal Inspection

NOTE:
- This procedure checks the APP sensor in its fully closed position. In any other position, the APP sensor stores DTCs which are covered in other troubleshooting procedures.
- Check for Pending or Confirmed DTCs with the HDS before doing this procedure. If any DTCs are indicated, troubleshoot them first, then do this procedure.
- Press the accelerator pedal several times to check its operation. If it does not operate properly, check the pedal. If you find a problem, replace the accelerator pedal module (see page 11-282).

1. Connect the HDS to the data link connector (DLC) (A) located under the driver's side of the dashboard.

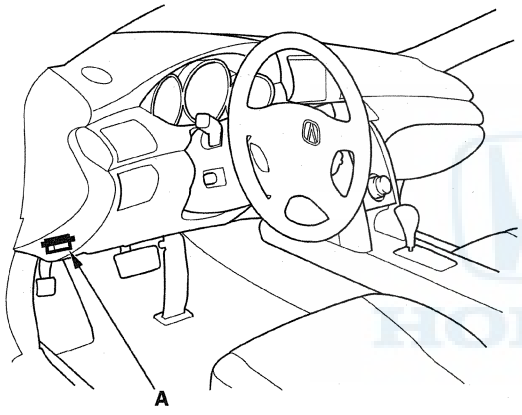

2. Turn the ignition switch to ON (II).

3. Make sure the HDS communicates with the PCM. If it does not, go to the DLC circuit troubleshooting (see page 11-211).

4. Make sure the accelerator pedal is not pressed, then check the APP SENSOR in the DATA LIST with the HDS.

   - If it is 0 %, the APP sensor is OK.
   - If it is not 0 %, update the PCM if it does not have the latest software, or substitute a known-good PCM (see page 11-7), then go to step 5.

5. Make sure the accelerator pedal is not pressed, then check the APP SENSOR in the DATA LIST with the HDS.

   - If it is 0 %, the APP sensor is OK.
   - If it is not 0 %, replace the accelerator pedal module (see page 11-282), then go to step 1.

HONDA

Accelerator Pedal Module Removal/ Installation

1. Disconnect the APP sensor connector (A).

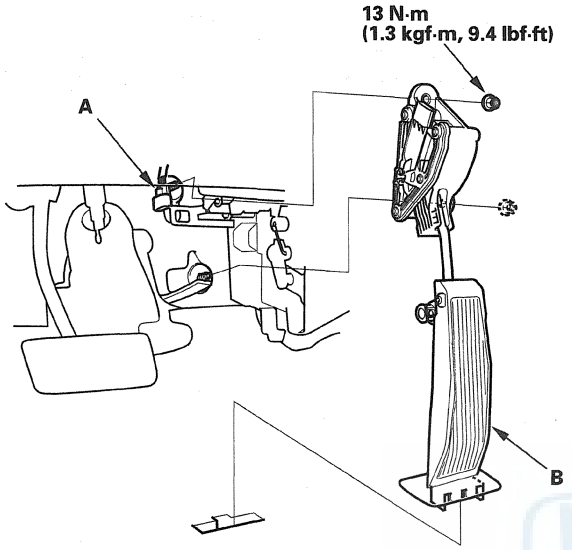

2. Release the lock tab on the base of the accelerator pedal, then remove the accelerator pedal module (B).

3. Install the parts in the reverse order of removal.

Throttle Actuator Control Module Replacement

1. Remove the right kick panel (see step 3 on page 20-67).

2. Remove the glove box (see page 20-103).

3. Remove the HandsFreeLink control unit (see page 23-339) and the adaptive cruise control (ACC) unit and its bracket (if equipped) (see page 25-86).

4. Disconnect the throttle actuator control module 16P connector (A).

With Adaptive Cruise Control (ACC) System

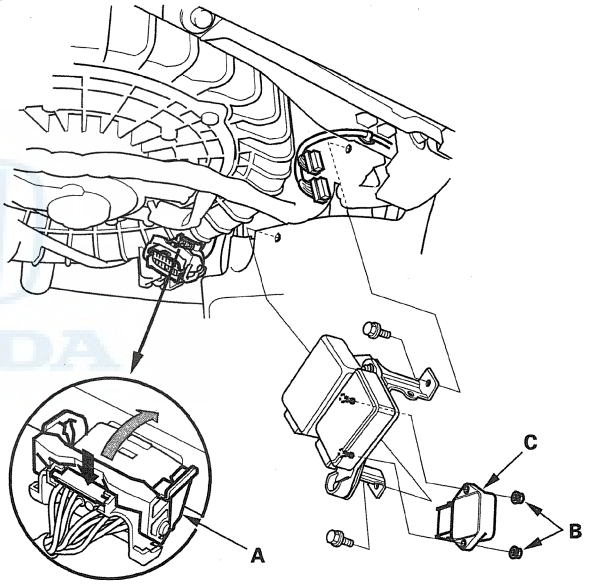

Without Adaptive Cruise Control (ACC) System

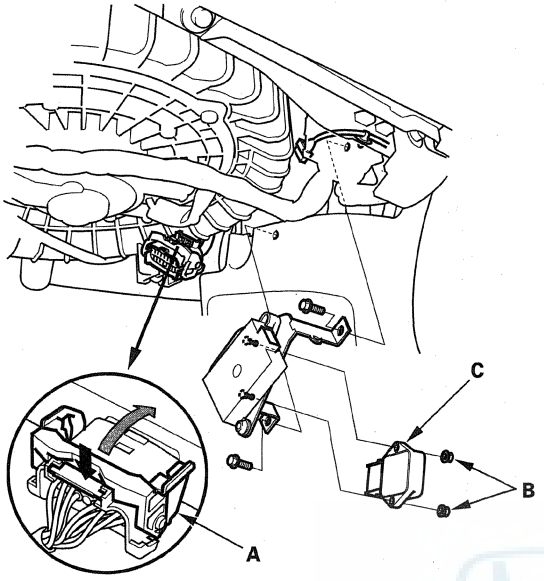

5. Remove the nuts (B) and the throttle actuator control module (C).

6. Install the parts in the reverse order of removal.

Component Location Index

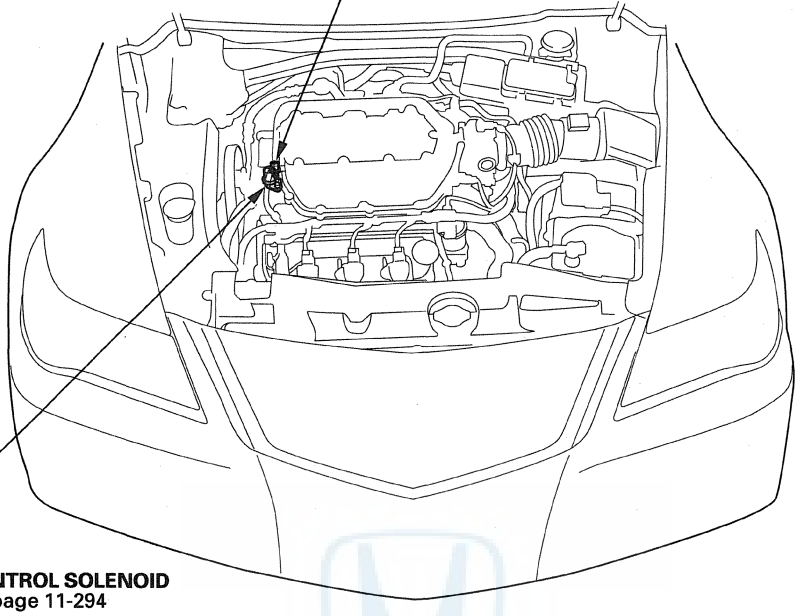

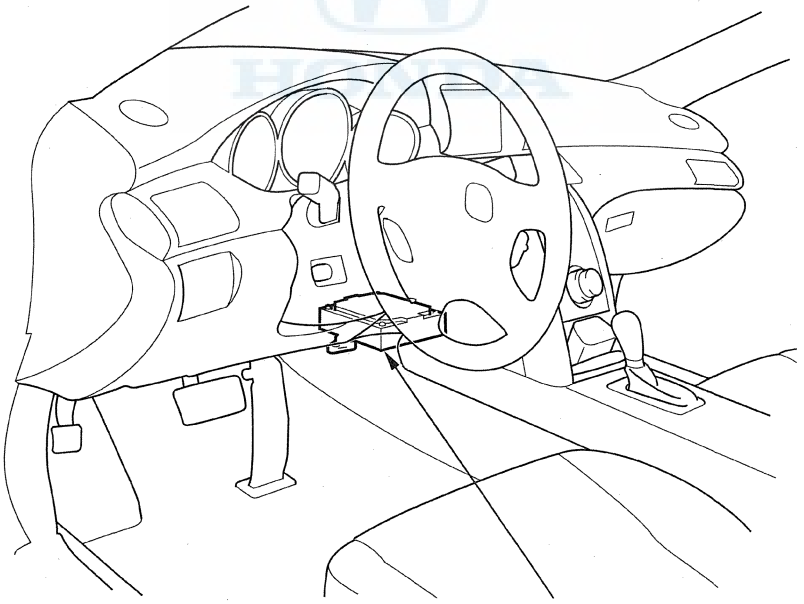

DTC Troubleshooting

DTC P2646: Rocker Arm Oil Pressure Switch Circuit Low Voltage

Special Tools Required
- Pressure gauge adapter 07NAJ-P07010A
- A/T low pressure gauge w/panel 07406-0070301
- A/T pressure hose, 2,210 mm 07MAJ-PY4011A
- A/T pressure adapter 07MAJ-PY40120
- Oil pressure hose 07ZAJ-S5AA200

NOTE: Before you troubleshoot, record all freeze data and any on-board snapshot, and review the general troubleshooting information (see page 11-3).

1. Check the engine oil level.

   Is the engine oil level OK?

   YES—Go to step 2.

   NO—Adjust the engine oil to the proper level, then go to step 20.

2. Turn the ignition switch to ON (II).

3. Clear the DTC with the HDS.

4. Do the VTEC TEST in the INSPECTION MENU with the HDS.

   Is the result OK?

   YES—Intermittent failure, the system is OK at this time. Check for poor connections or loose terminals at the rocker arm oil pressure switch, the rocker arm oil control solenoid, and the PCM. ■

   NO—Go to step 5.

5. Turn the ignition switch to LOCK (0).

6. Disconnect the rocker arm oil pressure switch 2P connector.

7. Turn the ignition switch to ON (II).

8. Check the VTEC PRES SW in the DATA LIST with the HDS.

   Is SWITCH ON indicated?

   YES—Go to step 15.

   NO—Go to step 9.

9. Turn the ignition switch to LOCK (0).

10. Remove the rocker arm oil pressure switch (A), attach the special tools as shown, then attach the rocker arm oil pressure switch to the pressure gauge adapter (B).

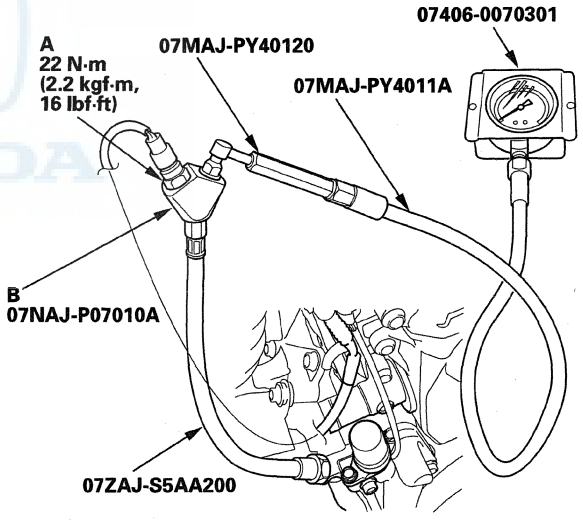

11. Reconnect the rocker arm oil pressure switch 2P connector.

12. Start the engine.

13. Do the VTEC TEST in the INSPECTION MENU with the HDS.

(cont'd)

DTC Troubleshooting (cont'd)

14. Check the oil pressure.

    Does the oil pressure increase to at least 392 kPa (4.0 kgf/cm², 56.9 psi)?

    YES—Replace the rocker arm oil pressure switch (see page 11-294), then go to step 19.

    NO—Inspect the following items. If they are OK, replace the rocker arm oil control solenoid (see page 11-294), then go to step 19.

    - VTEC system's oil line
    - Operation of the rocker arm (see page 6-8)

15. Turn the ignition switch to LOCK (0).

16. Jump the SCS line with the HDS.

17. Disconnect PCM connector A (31P).

18. Check for continuity between PCM connector terminal A23 and body ground.

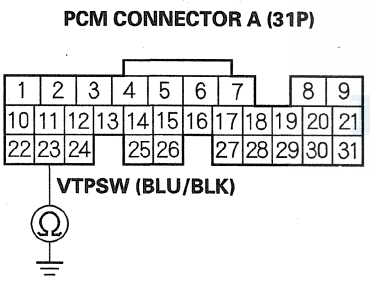

Wire side of female terminals

Is there continuity?

YES—Repair short in the wire between the PCM (A23) and the rocker arm oil pressure switch, then go to step 19.

NO—Go to step 26.

19. Reconnect all connectors.

20. Turn the ignition switch to ON (II).

21. Reset the PCM with the HDS.

22. Do the PCM idle learn procedure (see page 11-313).

23. Do the VTEC TEST in the INSPECTION MENU with the HDS.

24. Check for Pending or Confirmed DTCs with the HDS.

    Is DTC P2646 indicated?

    YES—Check for poor connections or loose terminals at the rocker arm oil pressure switch, the rocker arm oil control valve, and the PCM, then go to step 1.

    NO—Go to step 25.

25. Monitor the OBD STATUS for DTC P2646 in the DTCs MENU with the HDS.

    Does the screen indicate PASSED?

    YES—Troubleshooting is complete. If any other Pending or Confirmed DTCs were indicated in step 24, go to the indicated DTC's troubleshooting. ■

    NO—If the screen indicates FAILED, check for poor connections or loose terminals at the rocker arm oil pressure switch, the rocker arm oil control valve, and the PCM, then go to step 1. If the screen indicates NOT COMPLETED, go to step 23.

26. Reconnect all connectors.

27. Update the PCM if it does not have the latest software (see page 11-230), or substitute a known-good PCM (see page 11-7).

28. Do the VTEC TEST in the INSPECTION MENU with the HDS.

29. Check for Pending or Confirmed DTCs with the HDS.

    Is DTC P2646 indicated?

    YES—Check for poor connections or loose terminals at the rocker arm oil pressure switch, the rocker arm oil control solenoid, and the PCM. If the PCM was updated, substitute a known-good PCM (see page 11-7), then recheck. If the PCM was substituted, go to step 1.

    NO—Go to step 30.

30. Monitor the OBD STATUS for DTC P2646 in the DTCs MENU with the HDS.

    Does the screen indicate PASSED?

    YES—If the PCM was updated, troubleshooting is complete. If the PCM was substituted, replace the original PCM (see page 11-232). If any other Pending or Confirmed DTCs were indicated in step 28, go to the indicated DTC's troubleshooting. ■

    NO—If the screen indicates FAILED, check for poor connections or loose terminals at the rocker arm oil pressure switch, the rocker arm oil control solenoid, and the PCM. If the PCM was updated, substitute a known-good PCM (see page 11-7), then recheck. If the PCM was substituted, go to step 1. If the screen indicates NOT COMPLETED, keep idling until a result comes on.

DTC P2647: Rocker Arm Oil Pressure Switch Circuit High Voltage

NOTE: Before you troubleshoot, record all freeze data and any on-board snapshot, and review the general troubleshooting information (see page 11-3).

1. Check the engine oil level.

   Is the engine oil level OK?

   YES—Go to step 2.

   NO—Adjust the engine oil to the proper level, then go to step 17.

2. Turn the ignition switch to ON (II).

3. Clear the DTC with the HDS.

4. Do the VTEC TEST in the INSPECTION MENU with the HDS.

   NOTE: If a DTC is stored during the VTEC TEST, check the DTC's MENU. If DTC P2647 indicated, go to step 6. If any other Pending or Confirmed DTCs are indicated, go to the indicated DTC's troubleshooting.

   Is the result OK?

   YES—Intermittent failure, the system is OK at this time. Check for poor connections or loose terminals at the rocker arm oil pressure switch and the PCM. ■

   NO—Go to step 5.

5. Check the result of step 4.

   - Rocker arm oil pressure switch Failure
   - Rocker arm oil pressure switch Open
   - Rocker arm oil pressure switch SIG Line Open
   - Rocker arm oil pressure switch GND Line Open

   Is the test result any of the above?

   YES—Go to step 6.

   NO—Check for poor connections or loose terminals at the rocker arm oil pressure switch. If it is OK, replace the rocker arm oil control solenoid (see page 11-294), then go to step 17.

(cont'd)

DTC Troubleshooting (cont'd)

6. Turn the ignition switch to LOCK (0).

7. Disconnect the rocker arm oil pressure switch 2P connector.

8. At the rocker arm oil pressure switch side, check for continuity between rocker arm oil pressure switch 2P connector terminals No. 1 and No. 2.

ROCKER ARM OIL PRESSURE SWITCH 2P CONNECTOR

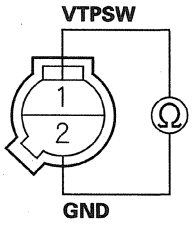

Terminal side of male terminals

Is there continuity?

YES—Go to step 9.

NO—Replace the rocker arm oil pressure switch (see page 11-294), then go to step 16.

9. Turn the ignition switch to ON (II).

10. Measure the voltage between rocker arm oil pressure switch 2P connector terminal No. 1 and body ground.

ROCKER ARM OIL PRESSURE SWITCH 2P CONNECTOR

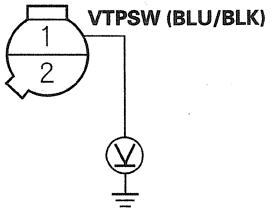

Wire side of female terminals

Is there battery voltage?

YES—Repair open in the wire between the rocker arm oil pressure switch and G101, then go to step 13.

NO—Go to step 11.

11. Measure the voltage between PCM connector terminal A23 and body ground.

PCM CONNECTOR A (31P)

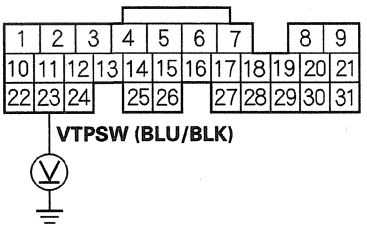

Wire side of female terminals

Is there battery voltage?

YES—Repair open in the wire between the PCM (A23) and the rocker arm oil pressure switch, then go to step 12.

NO—Go to step 19.

12. Turn the ignition switch to LOCK (0).

13. Reconnect the all connectors.

14. Turn the ignition switch to ON (II).

15. Reset the PCM with the HDS.

16. Do the PCM idle learn procedure (see page 11-313).

17. Check for Pending or Confirmed DTCs with the HDS.

    Is DTC P2647 indicated?

    YES—Check for poor connections or loose terminals at the rocker arm oil pressure switch and the PCM, then go to step 1.

    NO—Go to step 18.

18. Monitor the OBD STATUS for DTC P2647 in the DTCs MENU with the HDS.

    Does the screen indicate PASSED?

    YES—Troubleshooting is complete. If any other Pending or Confirmed DTCs were indicated in step 17, go to the indicated DTC's troubleshooting. ■

    NO—If the screen indicates FAILED, check for poor connections or loose terminals at the rocker arm oil pressure switch and the PCM, then go to step 1. If the screen indicates NOT COMPLETED, keep idling until a result comes on.

19. Turn the ignition switch to LOCK (0).

20. Reconnect all connectors.

21. Update the PCM if it does not have the latest software (see page 11-230), or substitute a known-good PCM (see page 11-7).

22. Check for Pending or Confirmed DTCs with the HDS.

    Is DTC P2647 indicated?

    YES—Check for poor connections or loose terminals at the rocker arm oil pressure switch and the PCM. If the PCM was updated, substitute a known-good PCM (see page 11-7), then recheck. If the PCM was substituted, go to step 1.

    NO—Go to step 23.

23. Monitor the OBD STATUS for DTC P2647 in the DTCs MENU with the HDS.

    Does the screen indicate PASSED?

    YES—If the PCM was updated, troubleshooting is complete. If the PCM was substituted, replace the original PCM (see page 11-232). If any other Pending or Confirmed DTCs were indicated in step 22, go to the indicated DTC's troubleshooting. ■

    NO—If the screen indicates FAILED, check for poor connections or loose terminals at the rocker arm oil pressure switch and the PCM. If the PCM was updated, substitute a known-good PCM (see page 11-7), then recheck. If the PCM was substituted, go to step 1. If the screen indicates NOT COMPLETED, keep idling until a result comes on.

DTC Troubleshooting (cont'd)

DTC P2648: Rocker Arm Oil Control Solenoid Circuit Low Voltage

NOTE: Before you troubleshoot, record all freeze data and any on-board snapshot, and review the general troubleshooting information (see page 11-3).

1. Turn the ignition switch to ON (II).
2. Clear the DTC with the HDS.
3. Do the VTEC TEST in the INSPECTION MENU with the HDS.

   Is the result OK?

   YES—Intermittent failure, the system is OK at this time. Check for poor connections or loose terminals at the rocker arm oil control solenoid and the PCM. ■

   NO—Go to step 4.
4. Turn the ignition switch to LOCK (0).
5. Disconnect the rocker arm oil control solenoid 1P connector.
6. At the solenoid side, measure the resistance between the rocker arm oil control solenoid 1P connector terminal and the solenoid valve body.

ROCKER ARM OIL CONTROL SOLENOID 1P CONNECTOR

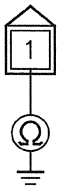

Terminal side of male terminals

Is there 14—30 Ω at room temperature?

YES—Go to step 7.

NO—Go to step 10.

7. Jump the SCS line with the HDS.
8. Disconnect PCM connector A (31P).
9. Check for continuity between PCM connector terminal A22 and body ground.

PCM CONNECTOR A (31P)

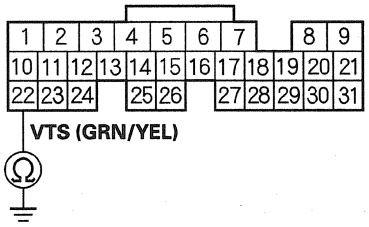

Wire side of female terminals

Is there continuity?

YES—Repair short in the wire between the PCM (A22) and the rocker arm oil control solenoid, then go to step 11.

NO—Go to step 18.

10. Replace the rocker arm oil control solenoid (see page 11-294).
11. Reconnect all connectors.
12. Turn the ignition switch to ON (II).
13. Reset the PCM with the HDS.
14. Do the PCM idle learn procedure (see page 11-313).
15. Do the VTEC TEST in the INSPECTION MENU with the HDS.
16. Check for Pending or Confirmed DTCs with the HDS.

    Is DTC P2648 indicated?

    YES—Check for poor connections or loose terminals at the rocker arm oil control solenoid and the PCM, then go to step 1.

    NO—Go to step 17.

17. Monitor the OBD STATUS for DTC P2648 in the DTCs MENU with the HDS.

    Does the screen indicate PASSED?

    YES—Troubleshooting is complete. If any other Pending or Confirmed DTCs were indicated in step 16, go to the indicated DTC's troubleshooting. ■

    NO—If the screen indicates FAILED, check for poor connections or loose terminals at the rocker arm oil control solenoid and the PCM, then go to step 1. If the screen indicates NOT COMPLETED, go to step 15.

18. Reconnect all connectors.

19. Update the PCM if it does not have the latest software (see page 11-230), or substitute a known-good PCM (see page 11-7).

20. Do the VTEC TEST in the INSPECTION MENU with the HDS.

21. Check for Pending or Confirmed DTCs with the HDS.

    Is DTC P2648 indicated?

    YES—Check for poor connections or loose terminals at the rocker arm oil control solenoid and the PCM. If the PCM was updated, substitute a known-good PCM (see page 11-7), then recheck. If the PCM was substituted, go to step 1.

    NO—Go to step 22.

22. Monitor the OBD STATUS for DTC P2648 in the DTCs MENU with the HDS.

    Does the screen indicate PASSED?

    YES—If the PCM was updated, troubleshooting is complete. If the PCM was substituted, replace the original PCM (see page 11-232). If any other Pending or Confirmed DTCs were indicated in step 21, go to the indicated DTC's troubleshooting. ■

    NO—If the screen indicates FAILED, check for poor connections or loose terminals at the rocker arm oil control solenoid and the PCM. If the PCM was updated, substitute a known-good PCM (see page 11-7), then recheck. If the PCM was substituted, go to step 1. If the screen indicates NOT COMPLETED, go to step 20.

DTC Troubleshooting (cont'd)

DTC P2649: Rocker Arm Oil Control Solenoid Circuit High Voltage

NOTE: Before you troubleshoot, record all freeze data and any on-board snapshot, and review the general troubleshooting information (see page 11-3).

1. Turn the ignition switch to ON (II).
2. Clear the DTC with the HDS.
3. Start the engine. Hold the engine speed at 3,000 rpm without load (in P or N) until the radiator fan comes on, then let it idle.
4. Check for Pending or Confirmed DTCs with the HDS.

   Is DTC P2649 indicated?

   YES—Go to step 5.

   NO—Intermittent failure, the system is OK at this time. Check for poor connections or loose terminals at the rocker arm oil control solenoid and the PCM. ■
5. Turn the ignition switch to LOCK (0).
6. Disconnect the rocker arm oil control solenoid 1P connector.
7. At the solenoid side, measure the resistance between the rocker arm oil control solenoid 1P connector terminal and the solenoid valve body.

ROCKER ARM OIL CONTROL SOLENOID 1P CONNECTOR

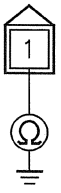

Terminal side of male terminals

Is there 14—30 Ω at room temperature?

YES—Go to step 8.

NO—Go to step 12.

8. Jump the SCS line with the HDS.
9. Disconnect PCM connector A (31P).
10. Connect the rocker arm oil control solenoid 1P connector terminal to body ground with a jumper wire.

ROCKER ARM OIL CONTROL SOLENOID 1P CONNECTOR

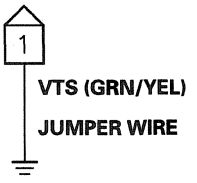

Wire side of female terminals

11. Check for continuity between PCM connector terminal A22 and body ground.

PCM CONNECTOR A (31P)

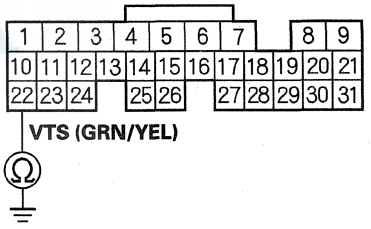

Wire side of female terminals

Is there continuity?

YES—Go to step 20.

NO—Repair open in the wire between the PCM (A22) and the rocker arm oil control solenoid, then go to step 13.

12. Replace the rocker arm oil control solenoid (see page 11-294).

13. Reconnect all connectors.

14. Turn the ignition switch to ON (II).

15. Reset the PCM with the HDS.

16. Do the PCM idle learn procedure (see page 11-313).

17. Start the engine. Hold the engine speed at 3,000 rpm without load (in P or N) until the radiator fan comes on, then let it idle.

18. Check for Pending or Confirmed DTCs with the HDS.

    Is DTC P2649 indicated?

    YES—Check for poor connections or loose terminals at the rocker arm oil control solenoid and the PCM, then go to step 1.

    NO—Go to step 19.

19. Monitor the OBD STATUS for DTC P2649 in the DTCs MENU with the HDS.

    Does the screen indicate PASSED?

    YES—Troubleshooting is complete. If any other Pending or Confirmed DTCs were indicated in step 18, go to the indicated DTC's troubleshooting. ■

    NO—If the screen indicates FAILED, check for poor connections or loose terminals at the rocker arm oil control solenoid and the PCM, then go to step 1. If the screen indicates NOT COMPLETED, keep idling until a result comes on.

20. Reconnect all connectors.

21. Update the PCM if it does not have the latest software (see page 11-230), or substitute a known-good PCM (see page 11-7).

22. Check for Pending or Confirmed DTCs with the HDS.

    Is DTC P2649 indicated?

    YES—Check for poor connections or loose terminals at the rocker arm oil control solenoid and the PCM. If the PCM was updated, substitute a known-good PCM (see page 11-7), then recheck. If the PCM was substituted, go to step 1.

    NO—Go to step 23.

23. Monitor the OBD STATUS for DTC P2649 in the DTCs MENU with the HDS.

    Does the screen indicate PASSED?

    YES—If the PCM was updated, troubleshooting is complete. If the PCM was substituted, replace the original PCM (see page 11-232). If any other Pending or Confirmed DTCs were indicated in step 21, go to the indicated DTC's troubleshooting. ■

    NO—If the screen indicates FAILED, check for poor connections or loose terminals at the rocker arm oil control solenoid and the PCM. If the PCM was updated, substitute a known-good PCM (see page 11-7), then recheck. If the PCM was substituted, go to step 1. If the screen indicates NOT COMPLETED, keep idling until a result comes on.

Rocker Arm Oil Control Solenoid Replacement

1. Disconnect the rocker arm oil control solenoid connector (A).

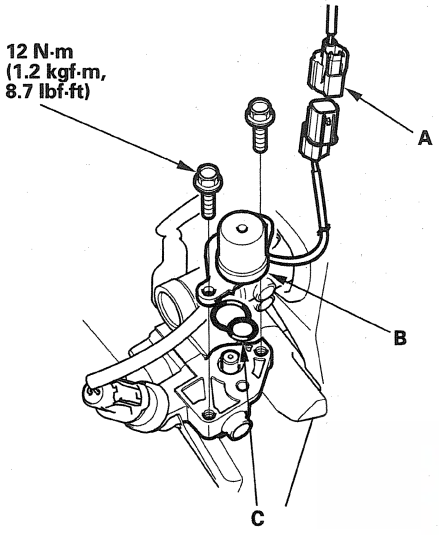

2. Remove the rocker arm oil control solenoid (B).
3. Install the parts in the reverse order of removal with a new O-ring (C).

Rocker Arm Oil Pressure Switch Removal/Installation

1. Disconnect the rocker arm oil pressure switch connector (A), then remove the rocker arm oil pressure switch (B).

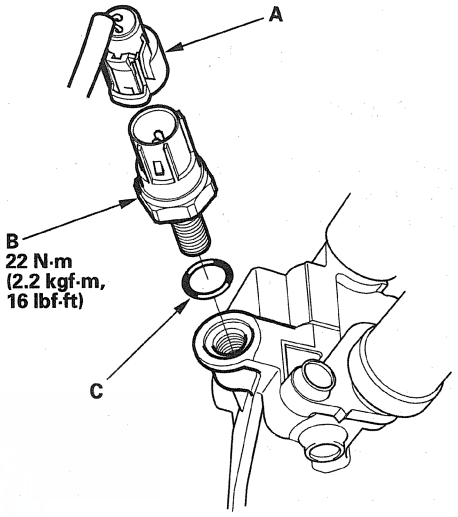

2. Install the parts in the reverse order of removal with a new O-ring (C).

Component Location Index

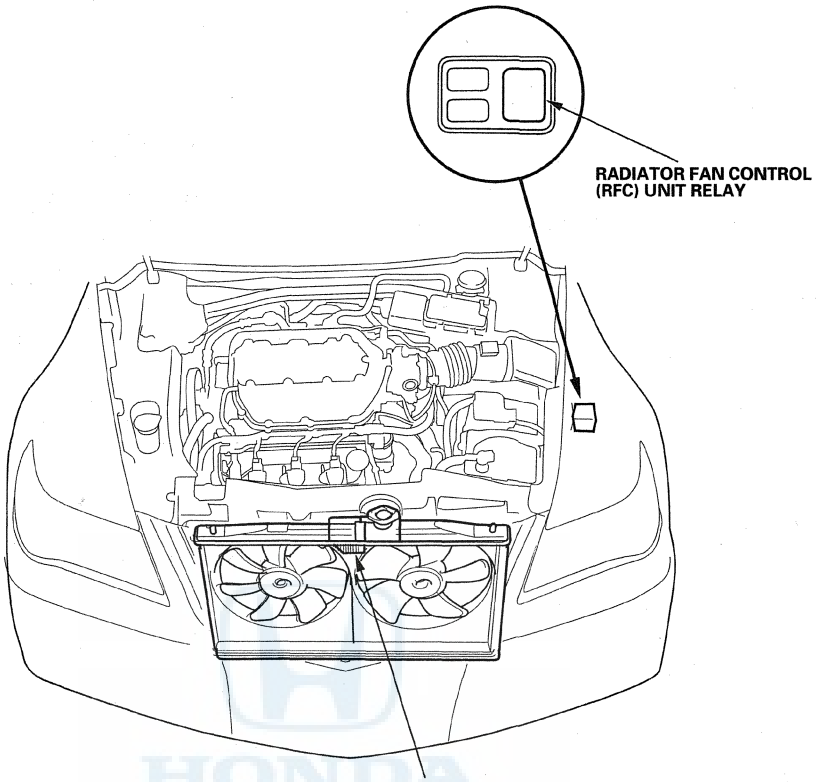

RADIATOR FAN CONTROL (RFC) UNIT
Replacement, page 10-22

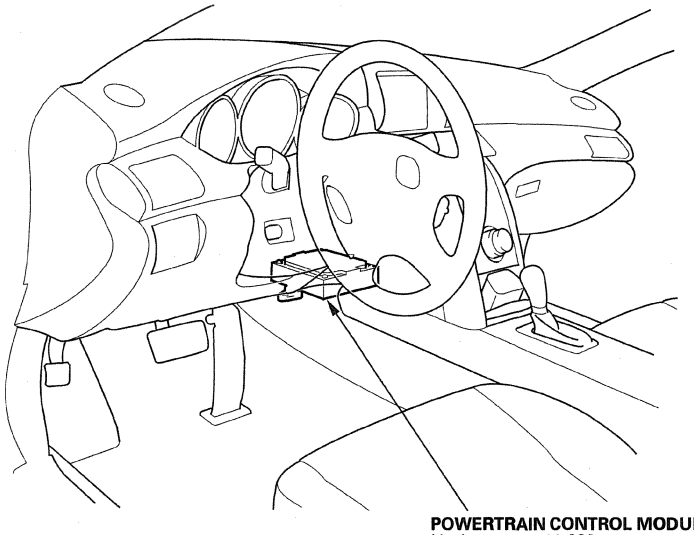

POWERTRAIN CONTROL MODULE (PCM)
Update, page 11-230
Substitution, page 11-7
Replacement, page 11-232

DTC Troubleshooting

DTC P0480: RFC System Malfunction

NOTE: Before you troubleshoot, record all freeze data and any on-board snapshot, and review the general troubleshooting information (see page 11-3).

1. Turn the ignition switch to ON (II).
2. Clear the DTC with the HDS, and wait 3 minutes or more.
3. Check for Pending or Confirmed DTCs with the HDS.

   Is DTC P0480 indicated?

   YES—Go to step 6.

   NO—Go to step 4.
4. Select RADIATOR FAN in the INSPECTION MENU with the HDS.
5. Check for Pending or Confirmed DTCs with the HDS.

   Is DTC P0480 indicated?

   YES—Go to step 6.

   NO—Intermittent failure, the system is OK at this time. Check for poor connections or loose terminals at the RFC unit, the RFC unit relay, the radiator fan motor, the condenser fan motor, and the PCM. ■
6. Check for these conditions at the radiator fan and the condenser fan:

   • Interference with fan shroud
   • Debris in the fan
   • Ice on the fan blades

   Are both fans OK?

   YES—Go to step 7.

   NO—Repair or replace the damaged parts, then go to step 52.
7. Select RADIATOR FAN in the INSPECTION MENU with the HDS.
8. Check the radiator fan and the condenser fan operation.

   Do both fans operate?

   YES—Go to step 9.

   NO—Replace the motor that is not operating, then go to step 52.
9. Turn the ignition switch to LOCK (0).
10. Let the engine cool until the coolant temperature is low.
11. Turn the ignition switch to ON (II), and wait 3 minutes or more.
12. Confirm that the A/C is not switched on.
13. Check the radiator fan and the condenser fan operation.

    Do both fans keep running?

    YES—Go to step 25.

    NO—Go to step 14.
14. Turn the ignition switch to LOCK (0).
15. Check the No. 23 IGP (7.5 A) fuse in the driver's under-dash fuse/relay box.

    Is the fuse OK?

    YES—Go to step 16.

    NO—Repair short in the wire between the RFC unit relay and the No. 23 IGP (7.5 A) fuse. Also replace the No. 23 IGP (7.5 A) fuse, then go to step 52.

16. Check the No. 34 +B RAD FAN (50 A) fuse in the battery terminal fuse box.

Is the fuse OK?

YES—Go to step 17.

NO—Go to step 31.

17. Disconnect the RFC unit 1P connector.

18. Turn the ignition switch to ON (II), and wait 3 minutes or more.

19. Measure the voltage between the RFC unit 1P connector terminal and body ground.

RFC UNIT 1P CONNECTOR

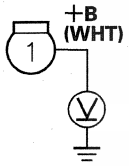

Wire side of female terminals

Is there battery voltage?

YES—Go to step 20.

NO—Go to step 39.

20. Turn the ignition switch to LOCK (0).

21. Check for continuity between PCM connector terminal E6 and body ground.

PCM CONNECTOR E (31P)

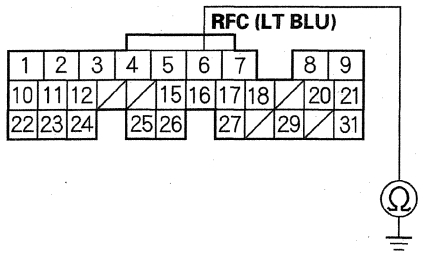

Wire side of female terminals

Is there continuity?

YES—Go to step 22.

NO—Substitute a known-good RFC unit (see page 10-22), then go to step 52 and recheck. If DTC P0480 is not indicated, replace the original RFC unit (see page 10-22), then go to step 52.

22. Jump the SCS line with the HDS.

23. Disconnect PCM connector E (31P).

24. Check for continuity between PCM connector terminal E6 and body ground.

PCM CONNECTOR E (31P)

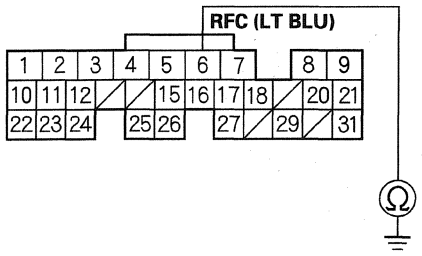

Wire side of female terminals

Is there continuity?

YES—Repair short in the wire between the PCM (E6) and the RFC unit, then go to step 52.

NO—Go to step 58.

(cont'd)

DTC Troubleshooting (cont'd)

25. Measure the voltage between PCM connector terminal E6 and body ground.

PCM CONNECTOR E (31P)

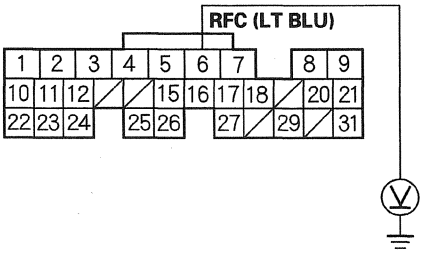

Wire side of female terminals

Is there about 5 V?

YES—Go to step 58.

NO—Go to step 26.

26. Jump the SCS line with the HDS.
27. Disconnect PCM connector E (31P).
28. Disconnect the RFC unit 3P connector.
29. Connect RFC unit 3P connector terminal No. 1 and body ground with a jumper wire.

RFC UNIT 3P CONNECTOR

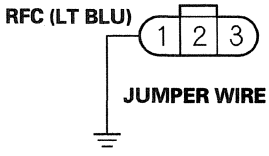

Wire side of female terminals

30. Check for continuity between PCM connector terminal E6 and body ground.

PCM CONNECTOR E (31P)

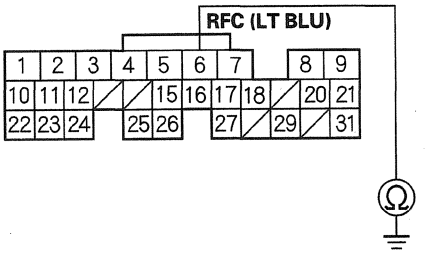

Wire side of female terminals

Is there continuity?

YES—Substitute a known-good RFC unit (see page 10-22), then go to step 52 and recheck. If DTC P0480 is not indicated, replace the original RFC unit (see page 10-22), then go to step 52.

NO—Repair open in the wire between the PCM (E6) and the RFC unit, then go to step 52.

31. Remove the air cleaner (see page 11-366), and remove the RFC unit relay (A).

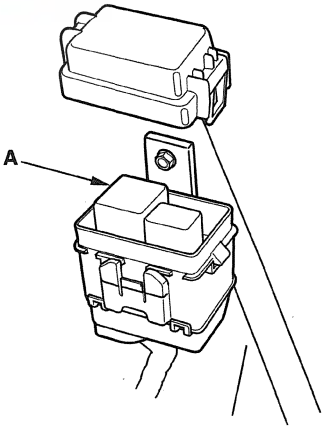

32. Check for continuity between RFC unit relay 4P connector terminal No. 1 and body ground.

RFC UNIT RELAY 4P CONNECTOR

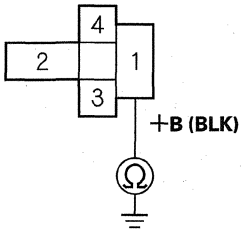

Terminal side of female terminals

Is there continuity?

YES—Repair short in the wire between the RFC unit relay and the No. 34 +B RAD FAN (50 A) fuse. Also replace the No. 34 +B RAD FAN (50 A) fuse, then go to step 52.

NO—Go to step 33.

33. Disconnect the RFC unit 1P connector.

34. Check for continuity between the RFC unit 1P connector terminal and body ground.

RFC UNIT 1P CONNECTOR

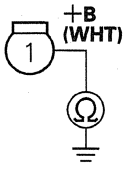

Wire side of female terminals

Is there continuity?

YES—Repair short in the wire between the RFC unit relay (+B line) and the RFC unit. Also replace the No. 34 +B RAD FAN (50 A) fuse, then go to step 52.

NO—Go to step 35.

35. Disconnect the RFC unit 2P connector (connected to radiator fan motor).

36. Check for continuity RFC unit 2P connector terminal No. 1 and body ground.

RFC UNIT 2P CONNECTOR (RADIATOR FAN MOTOR side)

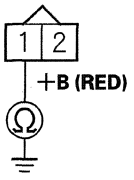

Wire side of female terminals

Is there continuity?

YES—Repair short in the wire between the RFC unit and the radiator fan motor. Also replace the No. 34 +B RAD FAN (50 A) fuse, then go to step 52.

NO—Go to step 37.

(cont'd)

DTC Troubleshooting (cont'd)

37. Disconnect the RFC unit 2P connector (connected to the A/C condenser fan motor).

38. Check for continuity between RFC unit 2P connector terminal No. 1 and body ground.

RFC UNIT 2P CONNECTOR (A/C CONDENSER FAN MOTOR side)

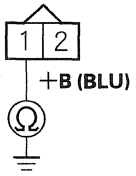

Wire side of female terminals

Is there continuity?

YES—Repair short in the wire between the RFC unit and the condenser fan motor. Also replace the No. 34 +B RAD FAN (50 A) fuse, then go to step 52.

NO—Substitute a known-good RFC unit (see page 10-22), then go to step 52 and recheck. If DTC P0480 is not indicated, replace the original RFC unit (see page 10-22), then go to step 52.

39. Turn the ignition switch to LOCK (0).

40. Remove the air cleaner (see page 11-366), and remove the RFC unit relay (A).

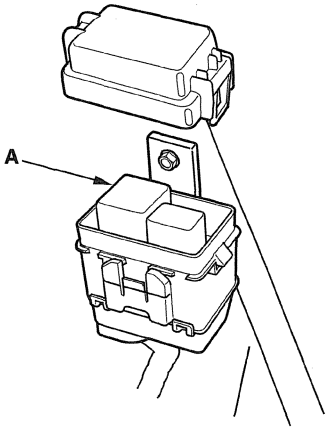

41. Check the RFC unit relay (see page 22-93).

Is the RFC unit relay OK?

YES—Go to step 42.

NO—Replace the RFC unit relay, then go to step 52.

42. Turn the ignition switch to ON (II).

43. Measure the voltage between RFC unit relay 4P connector terminal No. 1 and body ground.

RFC UNIT RELAY 4P CONNECTOR

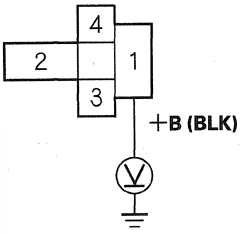

Terminal side of female terminals

Is there battery voltage?

YES—Go to step 44.

NO—Repair open in the wire between the RFC unit relay and the No. 34 +B RAD FAN (50 A) fuse, then go to step 52.

44. Measure the voltage between RFC unit relay 4P connector terminal No. 4 and body ground.

RFC UNIT RELAY 4P CONNECTOR

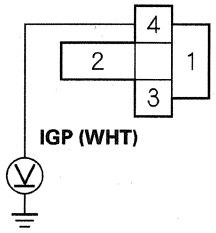

Terminal side of female terminals

Is there battery voltage?

YES—Go to step 45.

NO—Repair open in the wire between the RFC unit relay and the No. 23 IGP (7.5 A) fuse, then go to step 52.

45. Connect RFC unit relay 4P connector terminal No. 2 and body ground with a jumper wire.

RFC UNIT RELAY 4P CONNECTOR

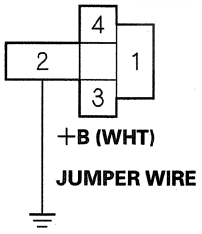

Terminal side of female terminals

46. Check for continuity between the RFC unit 1P connector terminal and body ground.

RFC UNIT 1P CONNECTOR

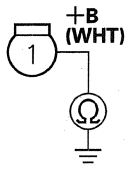

Wire side of female terminals

Is there continuity?

YES—Go to step 47.

NO—Repair open in the wire between the RFC unit relay (+B line) and the RFC unit, then go to step 52.

47. Remove the jumper wire from the RFC unit relay 4P connector.

48. Jump the SCS line with the HDS.

49. Disconnect PCM connector A (31P).

50. Connect RFC unit relay 4P connector terminal No. 3 and body ground with a jumper wire.

RFC UNIT RELAY 4P CONNECTOR

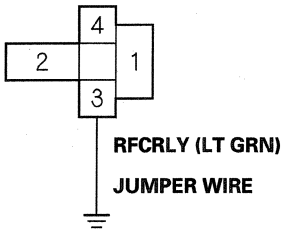

Terminal side of female terminals

(cont'd)

DTC Troubleshooting (cont'd)

51. Check for continuity between PCM connector terminal A13 and body ground.

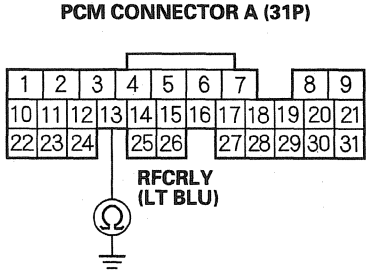

Wire side of female terminals

Is there continuity?

YES—Go to step 58.

NO—Repair open in the wire between the PCM (A13) and the RFC unit relay, then go to step 52.

52. Turn the ignition switch to LOCK (0).
53. Reconnect all connectors.
54. Turn the ignition switch to ON (II).
55. Reset the PCM with the HDS.
56. Do the PCM idle learn procedure (see page 11-313).
57. Check for Pending or Confirmed DTCs with the HDS.

Is DTC P0480 indicated?

YES—Check for poor connections or loose terminals at the RFC unit, the RFC unit relay, the radiator fan motor, the condenser fan motor, and the PCM.

NO—Troubleshooting is complete. If any other Pending or Confirmed DTCs are indicated, go to the indicated DTC's troubleshooting. ■

58. Reconnect all connectors.
59. Update the PCM if it does not have the latest software (see page 11-230), or substitute a known-good PCM (see page 11-7).
60. Check for Pending or Confirmed DTCs with the HDS.

Is DTC P0480 indicated?

YES—Check for poor connections or loose terminals at the RFC unit, the RFC unit relay, the radiator fan motor, the condenser fan motor, and the PCM. If the PCM was updated, substitute a known-good PCM (see page 11-7), then recheck. If the PCM was substituted, go to step 1.

NO—If the PCM was updated, troubleshooting is complete. If the PCM was substituted, replace the original PCM (see page 11-232). If any other Pending or Confirmed DTCs are indicated, go to the indicated DTC's troubleshooting. ■

Component Location Index

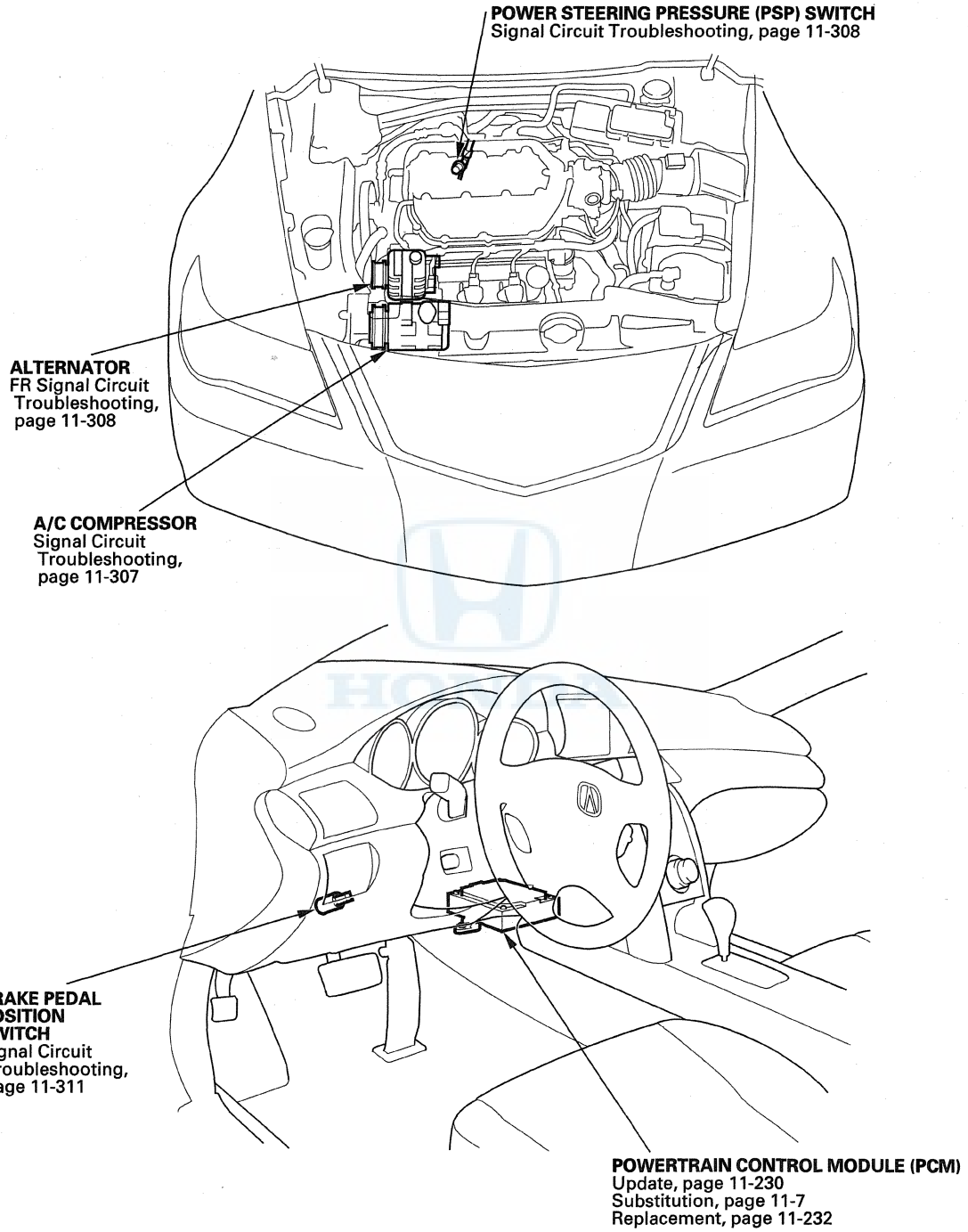

DTC Troubleshooting

DTC P0506: Idle Control System RPM Lower Than Expected

NOTE: Before you troubleshoot, record all freeze data and any on-board snapshot, and review the general troubleshooting information (see page 11-3).

1. Turn the ignition switch to ON (II).
2. Clear the DTC with the HDS.
3. Start the engine. Hold the engine speed at 3,000 rpm without load (in P or N) until the radiator fan comes on, then let it idle for 20 seconds or more.
4. Check for these conditions in the DATA LIST with the HDS:
   - ECT SENSOR 1 above 158 °F (70 °C)
   - IAT SENSOR above 32 °F (0 °C)
   - VSS is 0 mph (0 km/h)
   - ST FUEL TRIM between 0.73 and 1.47
   - FSS is CLOSED
5. Monitor the OBD STATUS for DTC P0506 in the DTCs MENU with the HDS.

   Does the screen indicate FAILED?

   YES—Go to step 6.

   NO—If the screen indicates PASSED, go to step 15. If the screen indicates EXECUTING, keep idling until a result comes on. If the screen indicates OUT OF CONDITION, go to step 4 and recheck.
6. Remove the intake air duct from the throttle body (see page 11-369).
7. Check for dirt, carbon, or damage in the throttle bore.

   Is there dirt, carbon, or damage in the throttle bore?

   YES—If there is dirt or carbon, clean the throttle body (see page 11-366). Also check for damage to the air cleaner element (see page 11-367), then go to step 9. If there is damage in the throttle bore, go to step 8.

   NO—Check the A/C system or the power steering system, then go to step 17.
8. Replace the throttle body (see page 11-369).
9. Reset the PCM with the HDS.
10. Do the PCM idle learn procedure (see page 11-313).
11. Start the engine. Hold the engine speed at 3,000 rpm without load (in P or N) until the radiator fan comes on, then let it idle for 20 seconds or more.
12. Check for these conditions in the DATA LIST with the HDS:
    - ECT SENSOR 1 above 158 °F (70 °C)
    - IAT SENSOR above 32 °F (0 °C)
    - VSS is 0 mph (0 km/h)
    - ST FUEL TRIM between 0.73 and 1.47
    - FSS is CLOSED

13. Check for Pending or Confirmed DTCs with the HDS.

    Is DTC P0506 indicated?

    YES—Go to step 1 and recheck.

    NO—Go to step 14.

14. Monitor the OBD STATUS for DTC P0506 in the DTCs MENU with the HDS.

    Does the screen indicate PASSED?

    YES—Troubleshooting is complete. If any other Pending or Confirmed DTCs were indicated in step 13, go to the indicated DTC's troubleshooting. ■

    NO—If the screen indicates FAILED, check the A/C system and/or the power steering system, then go to step 1. If the screen indicates EXECUTING, keep idling until a result comes on. If the screen indicates OUT OF CONDITION, go to step 12.

15. Remove the intake air duct from the throttle body (see page 11-369).

16. Check for dirt, carbon, or damage in the throttle bore.

    Is there dirt, carbon, or damage in the throttle bore?

    YES—If there is dirt or carbon, clean the throttle body (see page 11-366). Also check for damage to the air cleaner element (see page 11-367), then go to step 9. If there is damage in the throttle bore, go to step 8.

    NO—Go to step 17.

17. Recheck with different load conditions (turn on the headlights, the blower motor, the rear window defogger and/or the A/C, change the gear position, etc.).

18. Monitor the OBD STATUS for DTC P0506 in the DTCs MENU with the HDS.

    Does the screen indicate PASSED?

    YES—Intermittent failure, the system is OK at this time. ■

    NO—If the screen indicates FAILED, check the A/C system and/or the power steering system, then go to step 1. If the screen indicates EXECUTING, keep idling until a result comes on. If the screen indicates OUT OF CONDITION, go to step 12.

DTC Troubleshooting (cont'd)

DTC P0507: Idle Control System RPM Higher Than Expected

NOTE: Before you troubleshoot, record all freeze data and any on-board snapshot, and review the general troubleshooting information (see page 11-3).

1. Turn the ignition switch to ON (II).
2. Clear the DTC with the HDS.
3. Start the engine. Hold the engine speed at 3,000 rpm without load (in P or N) until the radiator fan comes on, then let it idle.
4. Monitor the OBD STATUS for DTC P0507 in the DTCs MENU with the HDS.

   Does the screen indicate FAILED?

   YES—Go to step 5.

   NO—If the screen indicates PASSED, intermittent failure, the system is OK at this time. If the screen indicates EXECUTING, keep idling until a result comes on. If the screen indicates OUT OF CONDITION, recheck with different load conditions (electrical, A/C, change the gear position, etc.), then go to step 3.
5. Check for vacuum leaks at these parts:

   - PCV valve
   - PCV hose
   - EVAP canister purge valve
   - Throttle body
   - Intake manifold
   - Brake booster hose
   - Brake booster

   Are there any leaks?

   YES—Repair or replace the leaking part(s), then go to step 6.

   NO—Go to step 6.
6. Turn the ignition switch to ON (II).
7. Reset the PCM with the HDS.
8. Do the PCM idle learn procedure (see page 11-313).
9. Start the engine. Hold the engine speed at 3,000 rpm without load (in P or N) until the radiator fan comes on, then let it idle.
10. Check for Pending or Confirmed DTCs with the HDS.

    Is DTC P0507 indicated?

    YES—Check for poor connections or loose terminals at the throttle body and the PCM, then go to step 1.

    NO—Go to step 11.
11. Monitor the OBD STATUS for DTC P0507 in the DTCs MENU with the HDS.

    Does the screen indicate PASSED?

    YES—Troubleshooting is complete. If any other Pending or Confirmed DTCs were indicated in step 10, go to the indicated DTC's troubleshooting. ■

    NO—If the screen indicates FAILED, check for poor connections or loose terminals at the throttle body and the PCM, then go to step 1. If the screen indicates EXECUTING, keep idling until a result comes on. If the screen indicates OUT OF CONDITION, recheck with different load conditions (turn on the headlights, the blower motor, or the A/C, change the gear position, etc.), then go to step 9.

A/C Signal Circuit Troubleshooting

1. Start the engine.
2. Turn the blower switch on.
3. Turn the A/C switch on.
4. Check the A/C CLUTCH in the DATA LIST with the HDS.

   Does it indicate ON?

   YES—Go to step 5.

   NO—Do the A/C pressure sensor circuit troubleshooting (see page 21-54). ■
5. Check the A/C system.

   Does the A/C system operate?

   YES—The air conditioning system circuit is OK. ■

   NO—Go to step 6.
6. Turn the ignition switch to LOCK (0).
7. Turn the ignition switch to ON (II).
8. Activate the A/C CLUTCH in the INSPECTION MENU with the HDS.

   Is there a clicking noise from the A/C compressor clutch?

   YES—Do the A/C system test (see page 21-109). ■

   NO—Go to step 9.
9. Momentarily connect PCM connector terminal E27 to body ground with a jumper wire several times.

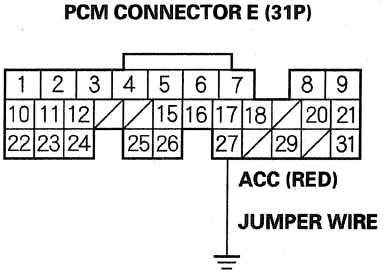

Wire side of female terminals

Is there a clicking noise from the A/C compressor clutch?

YES—Update the PCM if it does not have the latest software (see page 11-230), or substitute a known-good PCM (see page 11-7), then recheck. If the symptom/indication goes away with a known-good PCM, replace the original PCM (see page 11-232). ■

NO—Check for poor connections or loose terminals at the A/C compressor clutch relay in the under-hood fuse/relay box and the PCM. If the connections and the terminals are OK, check the A/C compressor clutch relay (see page 22-93), repair open in the wire between the PCM (E27) and the A/C compressor clutch relay. ■

Alternator FR Signal Circuit Troubleshooting

1. Start the engine, and let it idle.
2. Monitor the ALTERNATOR in the DATA LIST with the HDS.
3. Check if the indicated percentage varies when the headlight switch is turned on.

   Does the percentage vary?

   YES—The alternator signal circuit is OK. ■

   NO—Go to step 4.
4. Turn the headlight switch off, and turn the ignition switch to LOCK (0).
5. Jump the SCS line with the HDS.
6. Disconnect the alternator 4P connector.
7. Disconnect PCM connector A (31P).
8. Check for continuity between body ground and PCM connector terminal A12.

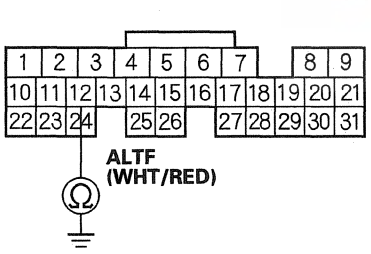

Wire side of female terminals

Is there continuity?

YES—Repair short in the wire between the PCM (A12) and the alternator. ■

NO—Update the PCM if it does not have the latest software (see page 11-230), or substitute a known-good PCM (see page 11-7), then recheck. If the symptom/indication goes away with a known-good PCM, replace the original PCM (see page 11-232). ■

PSP Switch Signal Circuit Troubleshooting

1. Start the engine, and let it idle.
2. Align the steering wheel straight ahead.
3. Check the PSP SWITCH in the DATA LIST with the HDS.

   Does it indicate ON?

   YES—Go to step 4.

   NO—Go to step 14.
4. Turn the steering wheel to the full lock position.
5. Check the PSP SWITCH in the DATA LIST with the HDS.

   Does it change to OFF?

   YES—The PSP switch signal circuit is OK. ■

   NO—Go to step 6.
6. Turn the ignition switch to LOCK (0).
7. Disconnect the PSP switch 2P connector.
8. Start the engine.
9. Check the PSP SWITCH in the DATA LIST with the HDS.

   Does it change to OFF?

   YES—Replace the PSP switch. ■

   NO—Go to step 10.

10. Turn the ignition switch to LOCK (0).
11. Jump the SCS line with the HDS.
12. Disconnect PCM connector E (31P).
13. Check for continuity between PSP switch 2P connector terminal No. 1 and body ground.

PSP SWITCH 2P CONNECTOR

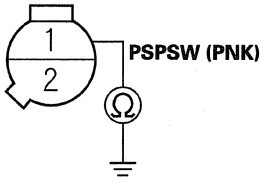

Wire side of female terminals

Is there continuity?

YES—Repair short in the wire between the PCM (E17) and the PSP switch. ■

NO—Update the PCM if it does not have the latest software (see page 11-230), or substitute a known-good PCM (see page 11-7), then recheck. If the symptom/indication goes away with a known-good PCM, replace the original PCM (see page 11-232). ■

14. Turn the ignition switch to LOCK (0).
15. Disconnect the PSP switch 2P connector.
16. Connect PSP switch 2P connector terminals No. 1 and No. 2 with a jumper wire, then turn the ignition switch to ON (II).

PSP SWITCH 2P CONNECTOR

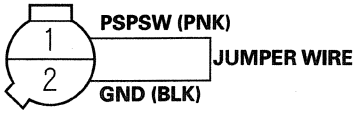

Wire side of female terminals

17. Check the PSP SWITCH in the DATA LIST with the HDS.

Does it change to ON?

YES—Replace the PSP switch. ■

NO—Go to step 18.

(cont'd)

PSP Switch Signal Circuit Troubleshooting (cont'd)

18. Turn the ignition switch to LOCK (0).
19. Remove the jumper wire from the PSP switch 2P connector.
20. Jump the SCS line with the HDS.
21. Disconnect PCM connector E (31P).
22. Connect PSP switch 2P connector terminal No. 1 to body ground with a jumper wire.

PSP SWITCH 2P CONNECTOR

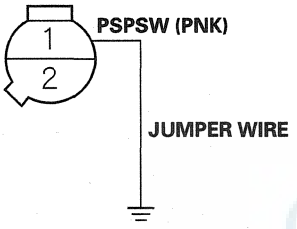

Wire side of female terminals

23. Check for continuity between body ground and PCM connector terminal E17.

PCM CONNECTOR E (31P)

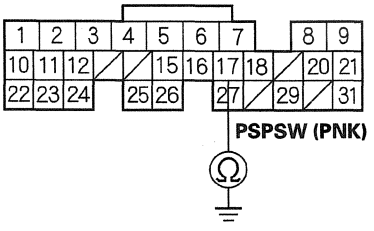

Wire side of female terminals

Is there continuity?

YES—Go to step 24.

NO—Repair open in the wire between the PSP switch and the PCM (E17).■

24. Check for continuity between PSP switch 2P connector terminal No. 2 and body ground.

PSP SWITCH 2P CONNECTOR

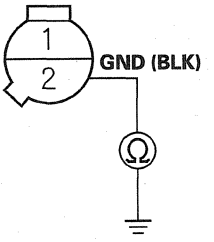

Wire side of female terminals

Is there continuity?

YES—Update the PCM if it does not have the latest software (see page 11-230), or substitute a known-good PCM (see page 11-7), then recheck. If the symptom/indication goes away with a known-good PCM, replace the original PCM (see page 11-232).■

NO—Repair open in the wire between the PSP switch and G401.■

Brake Pedal Position Switch Signal Circuit Troubleshooting

1. Turn the ignition switch to ON (II).
2. Check the BRAKE SWITCH in the DATA LIST with the HDS.

   Does it indicate OFF?

   YES—Go to step 3.

   NO—Inspect the brake pedal position switch (see page 19-6). ■
3. Press the brake pedal, and check the BRAKE SWITCH in the DATA LIST with the HDS.

   Does it change to ON?

   YES—The brake pedal position switch signal circuit (BKSW line) is OK. ■

   NO—Go to step 4.
4. Turn the ignition switch to LOCK (0).
5. Jump the SCS line with the HDS.
6. Disconnect the brake pedal position switch 4P connector.
7. Disconnect PCM connector E (31P).
8. Check for continuity between PCM connector terminal E8 and body ground.

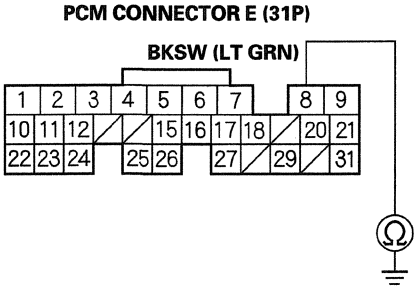

Wire side of female terminals

Is there continuity?

YES—Repair short in the wire between the PCM (E8) and the No. 13 HORN, STOP (15 A) fuse. Also replace the No. 13 HORN, STOP (15 A) fuse. ■

NO—Go to step 9.

9. Check for continuity between PCM connector terminal E8 and brake pedal position switch 4P connector terminal No. 2.

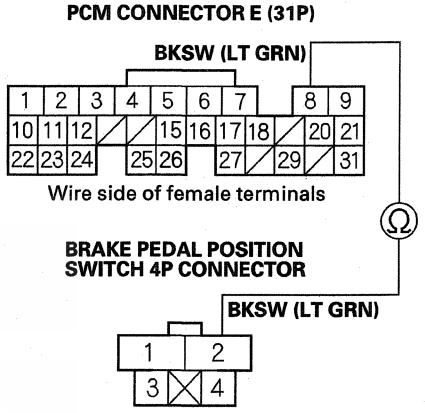

Wire side of female terminals

Wire side of female terminals

Is there continuity?

YES—Repair open in the wire between the brake pedal position switch, and replace the No. 13 HORN, STOP (15 A) fuse. Inspect the brake pedal position switch (see page 19-6). ■

NO—Repair open in the wire between the PCM (E8) and the brake pedal position switch. ■

Idle Speed Inspection

NOTE:
- Before checking the idle speed, check these items:
  - The malfunction indicator lamp (MIL) has not been reported on, and there are no DTCs.
  - Ignition timing
  - Spark plugs
  - Air cleaner
  - PCV system
- Apply the parking brake, and make sure the headlights are off.

1. Disconnect the evaporative emission (EVAP) canister purge valve connector.

2. Connect the HDS to the data link connector (DLC) (A) located under the driver's side of the dashboard.

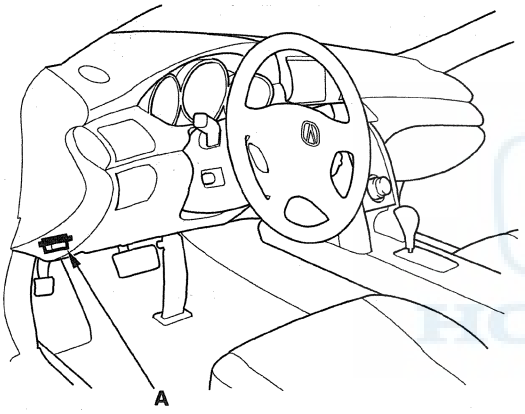

3. Make sure the HDS communicates with the PCM. If it does not, go to the DLC circuit troubleshooting (see page 11-211).

4. Start the engine. Hold the engine speed at 3,000 rpm without load (in P or N) until the radiator fan comes on, then let it idle.

5. Check the idle speed without load conditions: headlights, blower fan, radiator fan, and air conditioner off.

   Idle speed should be:
   680±50 rpm (in Park or neutral)

6. Let the engine idle for 1 minute with high electric load (the A/C switch on, the temperature set to max cool, the blower fan on high, the rear window defogger on, and the headlights on high beam).

   Idle speed should be:
   680±50 rpm (in Park or neutral)

   NOTE: If the idle speed is not within specification, do the PCM idle learn procedure (see page 11-313). If the idle speed is still not within specification, go to the symptom troubleshooting.

7. Reconnect the EVAP canister purge valve connector.

PCM Idle Learn Procedure

The idle learn procedure must be done so the PCM can learn the engine idle characteristics.

Do the idle learn procedure whenever you do any of these actions:

- Replace the PCM.
- Reset the PCM.
- Update the PCM.
- Replace or clean the throttle body.
- Disassemble the engine or the transmission.

NOTE: Clearing the DTCs with the HDS does not require you to do the idle learn procedure.

Procedure

1. Make sure all electrical items (the A/C, the audio, the rear window defogger, the lights, etc.) are off.
2. Reset the PCM with the HDS.
3. Turn the ignition switch to ON (II), and wait 2 seconds.
4. Start the engine. Hold the engine speed at 3,000 rpm without load (in P or N) until the radiator fan comes on, or until the engine coolant temperature reaches 194 °F (90 °C).
5. Let the engine idle for about 5 minutes with the throttle fully closed.

   NOTE: If the radiator fan comes on, do not include its running time in the 5 minutes.

Component Location Index

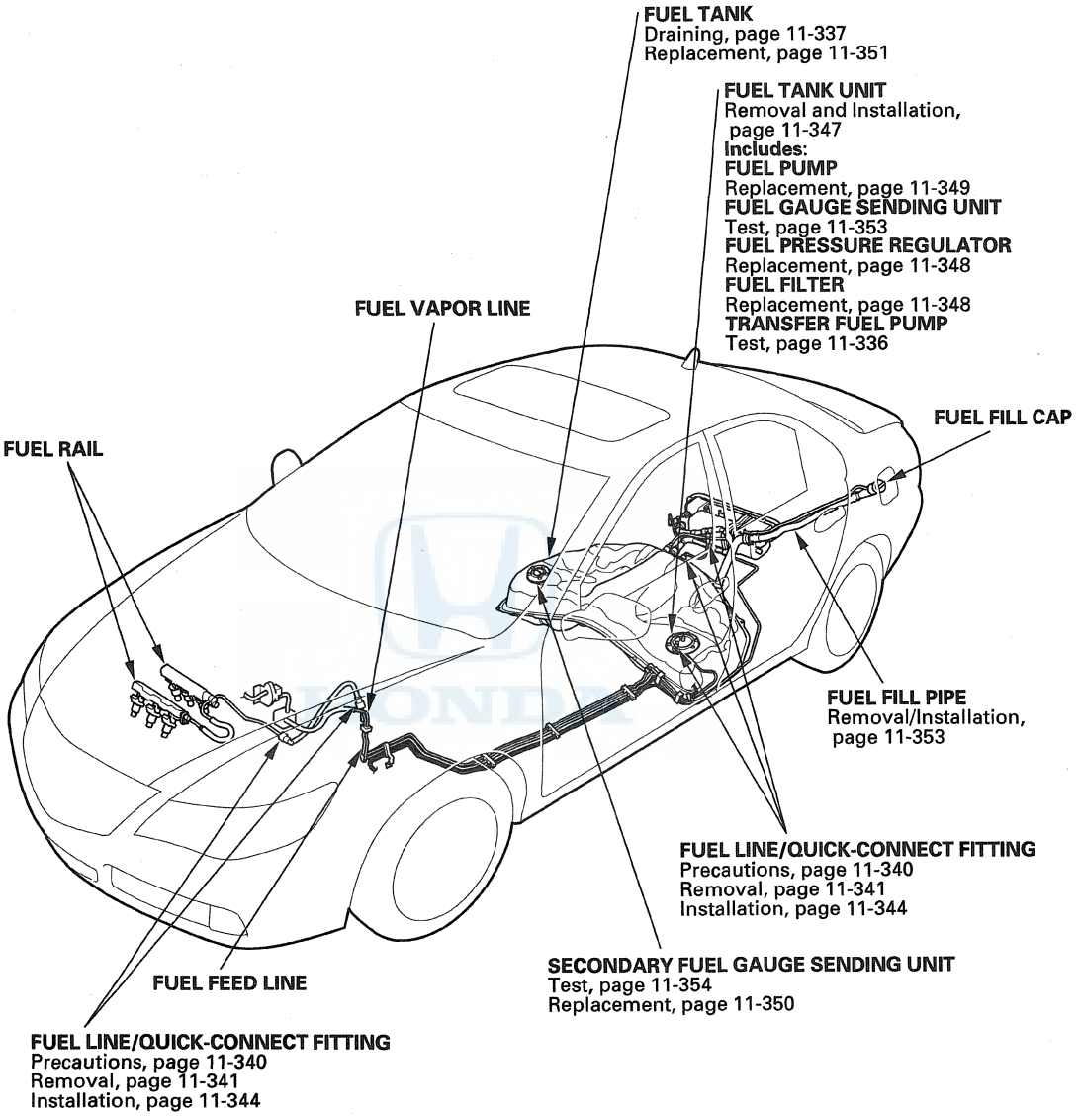

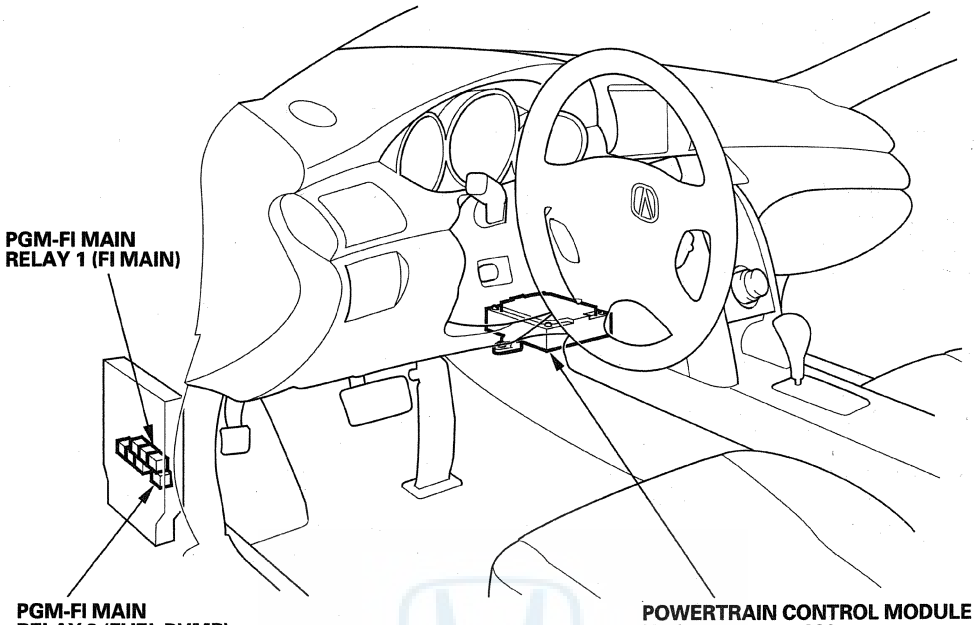
PGM-FI MAIN
RELAY 1 (FI MAIN)
PGM-FI MAIN
RELAY 2 (FUEL PUMP)
POWERTRAIN CONTROL MODULE (PCM)
Update, page 11-230
Substitution, page 11-7
Replacement, page 11-232

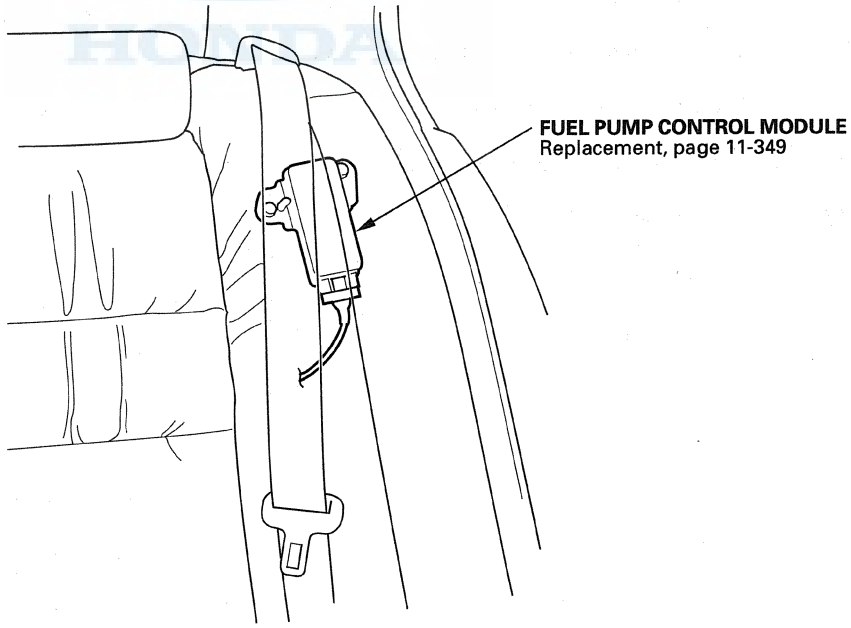
FUEL PUMP CONTROL MODULE
Replacement, page 11-349

DTC Troubleshooting

DTC P0461: Fuel Level Sensor (Fuel Gauge Sending Unit) Circuit Range/Performance Problem

NOTE:
- Before you troubleshoot, record all freeze data and any on-board snapshot, and review the general troubleshooting information (see page 11-3).
- Because it requires 162 miles (260 km) of driving without refueling to complete this diagnosis, DTC P0461 cannot be duplicated during this troubleshooting.

1. Test the fuel gauge sending unit (see page 11-353).

   Is the fuel gauge sending unit OK?

   YES—Check for poor connections or loose terminals at the fuel gauge sending unit and the gauge control module. ■

   NO—Replace the fuel gauge sending unit (see page 11-349), then go to step 2.

2. Turn the ignition switch to ON (II).
3. Reset the PCM with the HDS.
4. Do the PCM idle learn procedure (see page 11-313).
5. Check for Pending or Confirmed DTCs with the HDS.

   Are any Pending or Confirmed DTCs indicated?

   YES—Go to the indicated DTC's troubleshooting.

   NO—Troubleshooting is complete. ■

DTC P0462: Fuel Level Sensor (Fuel Gauge Sending Unit) Circuit Low Voltage

NOTE: Before you troubleshoot, record all freeze data and any on-board snapshot, and review the general troubleshooting information (see page 11-3).

1. Turn the ignition switch to ON (II).
2. Clear the DTC with the HDS, and wait 5 seconds.
3. Check for Pending or Confirmed DTCs with the HDS.

   Is DTC P0462 indicated?

   YES—Go to step 4.

   NO—Intermittent failure, the system is OK at this time. Check for poor connections or loose terminals at the gauge control module, the fuel gauge sending unit, and the secondary fuel gauge sending unit. ■

4. Turn the ignition switch to LOCK (0).
5. Remove the rear seat cushion (see page 20-140).
6. Remove the access panel from the right side of the floor.
7. Disconnect the secondary fuel gauge sending unit 5P connector.
8. Turn the ignition switch to ON (II).
9. Clear the DTC with the HDS, and wait 5 seconds.
10. Check for Pending or Confirmed DTCs with the HDS.

    Is DTC P0463 indicated?

    YES—Check the secondary fuel gauge sending unit (see page 11-354), then go to step 31.

    NO—Go to step 11.

11. Turn the ignition switch to LOCK (0).
12. Remove the access panel from the left side of the floor.

13. Disconnect the fuel pump 5P connector.
14. Turn the ignition switch to ON (II).
15. Clear the DTC with the HDS, and wait 5 seconds.
16. Check for Pending or Confirmed DTCs with the HDS.

    Is DTC P0463 indicated?

    YES—Go to step 17.

    NO—Go to step 21.
17. Turn the ignition switch to LOCK (0).
18. Remove the gauge control module (see page 22-419).
19. Disconnect gauge control module connector A (20P).
20. Check for continuity between fuel tank unit 5P connector terminal No. 2 and body ground.

FUEL PUMP 5P CONNECTOR

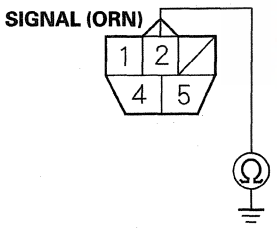

Wire side of female terminals

Is there continuity?

YES—Repair short in the wire between the gauge control module (signal line) and the fuel gauge sending unit, then go to step 31.

NO—Go to step 23.

21. Turn the ignition switch to LOCK (0).
22. Check for continuity between fuel tank unit 5P connector terminal No. 1 and body ground.

FUEL PUMP 5P CONNECTOR

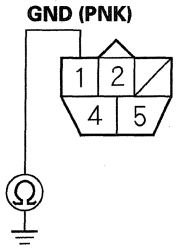

Wire side of female terminals

Is there continuity?

YES—Repair short in the wire between the fuel tank unit and the secondary fuel gauge sending unit, then go to step 31.

NO—Check the fuel gauge sending unit (see page 11-353).
23. Reconnect gauge control module connector A (20P).
24. Remove the fuel tank unit (see page 11-347) and the secondary fuel gauge sending unit (see page 11-350).
25. Connect the fuel tank unit and the secondary fuel gauge sending unit 5P connector.
26. Turn the ignition switch to ON (II).
27. Clear the DTC with the HDS.

(cont'd)

DTC Troubleshooting (cont'd)

28. Set the float (A) to the E position.

Fuel tank unit

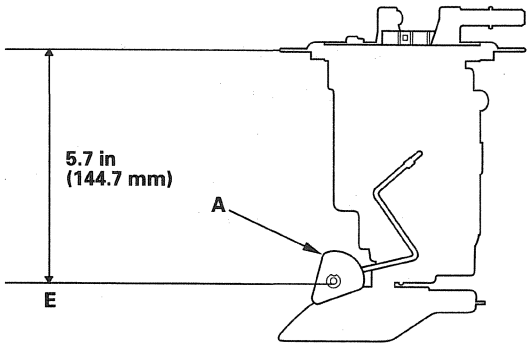

Secondary fuel gauge sending unit

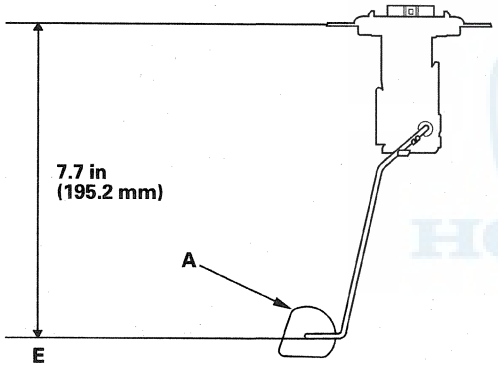

29. Check the fuel gauge.

Does the gauge move to the empty position?

YES—Go to step 37.

NO—Replace the gauge control module (see page 22-419), then go to step 30.

30. Turn the ignition switch to LOCK (0).

31. Install the parts in the reverse order of removal.

32. Reconnect all connectors.

33. Turn the ignition switch to ON (II).

34. Reset the PCM with the HDS.

35. Do the PCM idle learn procedure (see page 11-313).

36. Check for Pending or Confirmed DTCs with the HDS.

Is DTC P0462 indicated?

YES—Check for poor connections or loose terminals at the gauge control module, the fuel gauge sending unit, and the secondary fuel gauge sending unit, then go to step 1.

NO—Troubleshooting is complete. If any other Pending or Confirmed DTCs are indicated, go to the indicated DTC's troubleshooting. ■

37. Turn the ignition switch to LOCK (0).

38. Install the parts in the reverse order of removal.

39. Turn the ignition switch to ON (II).

40. Update the PCM if it does not have the latest software (see page 11-230), or substitute a known-good PCM (see page 11-7).

41. Check for Pending or Confirmed DTCs with the HDS.

Is DTC P0462 indicated?

YES—Check for poor connections or loose terminals at the gauge control module, the fuel gauge sending unit, and the secondary fuel gauge sending unit. If the PCM was updated, substitute a known-good PCM (see page 11-7), then recheck. If the PCM was substituted, go to step 1.

NO—If the PCM was updated, troubleshooting is complete. If the PCM was substituted, replace the original PCM (see page 11-232). If any other Pending or Confirmed DTCs are indicated, go to the indicated DTC's troubleshooting. ■

DTC P0463: Fuel Level Sensor (Fuel Gauge Sending Unit) Circuit High Voltage

NOTE: Before you troubleshoot, record all freeze data and any on-board snapshot, and review the general troubleshooting information (see page 11-3).

1. Turn the ignition switch to ON (II).
2. Clear the DTC with the HDS, and wait 5 seconds.
3. Check for Pending or Confirmed DTCs with the HDS.

   Is DTC P0463 indicated?

   YES—Go to step 4.

   NO—Intermittent failure, the system is OK at this time. Check for poor connections or loose terminals at the gauge control module, the fuel gauge sending unit, and the secondary fuel gauge sending unit. ■
4. Turn the ignition switch to LOCK (0).
5. Remove the rear seat cushion (see page 20-140).
6. Remove the access panel from the left side of the floor.
7. Disconnect the fuel pump 5P connector.
8. Remove the access panel from the right side of the floor.
9. Disconnect the secondary fuel gauge sending unit 5P connector.
10. Check for continuity between the fuel gauge sending unit 5P connector terminal No. 1 and the secondary fuel gauge sending unit 5P connector terminal No. 2.

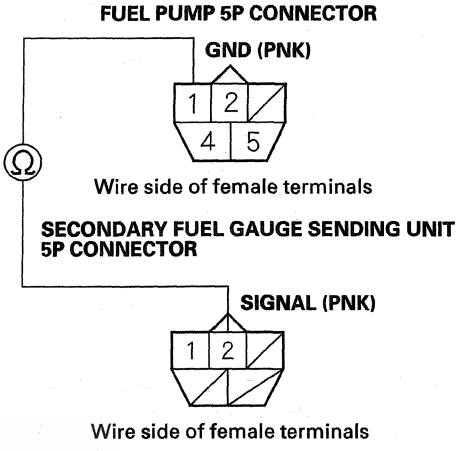

   Is there continuity?

   YES—Go to step 11.

   NO—Repair open in the wire between the fuel gauge sending unit and the secondary fuel gauge sending unit, then go to step 25.
11. Remove the gauge control module (see page 22-419).
12. Disconnect gauge control module connector A (20P).

(cont'd)

DTC Troubleshooting (cont'd)

13. Connect secondary fuel gauge sending unit 5P connector terminal No. 1 to body ground with a jumper wire.

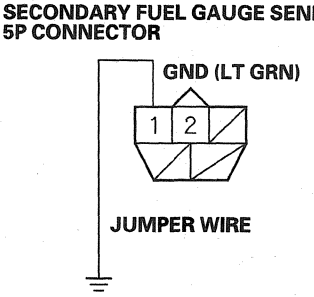

Wire side of female terminals

14. Check for continuity between gauge control module connector A (20P) terminal No. 18 and body ground.

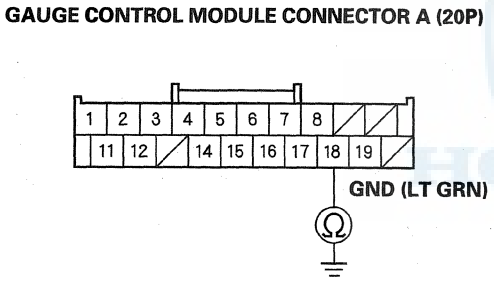

Wire side of female terminals

Is there continuity?

YES—Remove the jumper wire, then go to step 15.

NO—Repair open in the wire between the gauge control module and the secondary fuel gauge sending unit, then go to step 25.

15. Connect fuel pump 5P connector terminal No. 2 to body ground with a jumper wire.

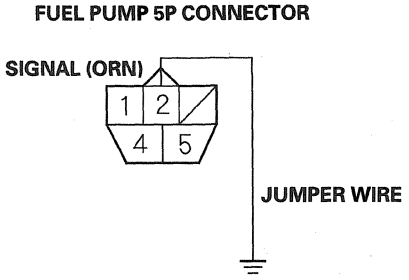

Wire side of female terminals

16. Check for continuity between gauge control module connector A (20P) terminal No. 19 and body ground.

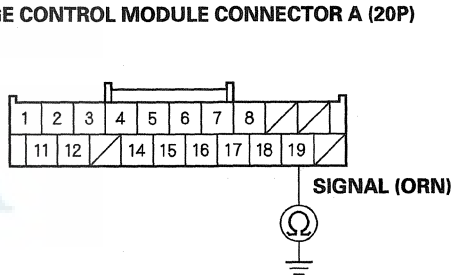

Wire side of female terminals

Is there continuity?

YES—Replace the gauge control module (see page 22-419), then go to step 17.

NO—Repair open in the wire between the gauge control module and the fuel gauge sending unit, then go to step 25.

17. Disconnect the jumper wire from the fuel gauge sending unit 5P connector.

18. Remove the fuel tank unit (see page 11-349).

19. Test the fuel gauge sending unit (see page 11-353).

    Is the fuel gauge sending unit OK?

    YES—Go to step 20.

    NO—Replace the fuel gauge sending unit (see page 11-349), then go to step 25.

20. Remove the secondary fuel gauge sending unit (see page 11-350).

21. Test the secondary fuel gauge sending unit (see page 11-354).

    Is the secondary fuel gauge sending unit OK?

    YES—Go to step 22.

    NO—Replace the secondary fuel gauge sending unit (see page 11-350), then go to step 25.

22. Set the float (A) to the F positions.

Fuel tank unit

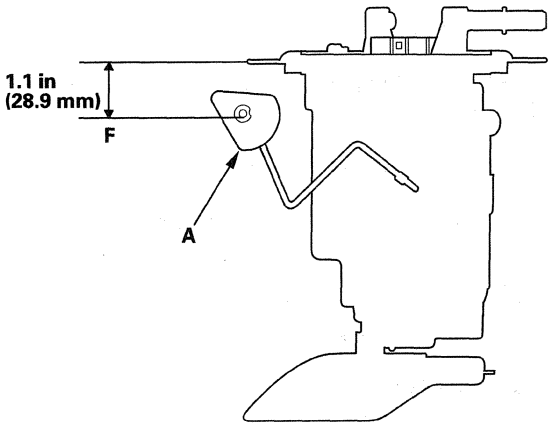

Secondary fuel gauge sending unit

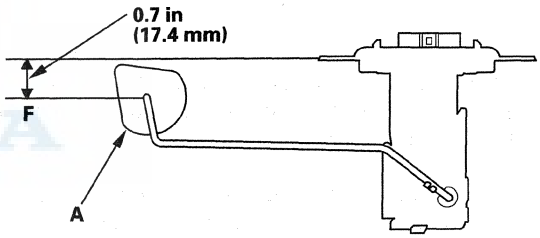

(cont'd)

DTC Troubleshooting (cont'd)

23. Check the fuel gauge.

    Does the gauge move to the full position?

    YES—Go to step 31.

    NO—Replace the gauge control module (see page 22-419), then go to step 24.

24. Turn the ignition switch to LOCK (0).

25. Install the parts in the reverse order of removal.

26. Reconnect all connectors.

27. Turn the ignition switch to ON (II).

28. Reset the PCM with the HDS.

29. Do the PCM idle learn procedure (see page 11-313).

30. Check for Pending or Confirmed DTCs with the HDS.

    Is DTC P0463 indicated?

    YES—Check for poor connections or loose terminals at the gauge control module, the fuel gauge sending unit, and the secondary fuel gauge sending unit, then go to step 1.

    NO—Troubleshooting is complete. If any other Pending or Confirmed DTCs are indicated, go to the indicated DTC's troubleshooting. ■

31. Turn the ignition switch to LOCK (0).

32. Install the parts in the reverse order of removal.

33. Turn the ignition switch to ON (II).

34. Update the PCM if it does not have the latest software (see page 11-230), or substitute a known-good PCM (see page 11-7).

35. Check for Pending or Confirmed DTCs with the HDS.

    Is DTC P0463 indicated?

    YES—Check for poor connections or loose terminals at the gauge control module, the fuel gauge sending unit, and the secondary fuel gauge sending unit. If the PCM was updated, substitute a known-good PCM (see page 11-7), then recheck. If the PCM was substituted, go to step 1.

    NO—If the PCM was updated, troubleshooting is complete. If the PCM was substituted, replace the original PCM (see page 11-232). If any other Pending or Confirmed DTCs are indicated, go to the indicated DTC's troubleshooting. ■

DTC P0627: Fuel Pump Control Module System Malfunction

NOTE: Before you troubleshoot, record all freeze data and any on-board snapshot, and review the general troubleshooting information (see page 11-3).

1. Turn the ignition switch to ON (II).
2. Clear the DTC with the HDS.
3. Turn the ignition switch to the START (III) position.

   NOTE: This vehicle has an auto control mode starting system. It keeps the starter motor running after the ignition switch is released for 15 seconds, or until the engine starts.

4. Check for Pending or Confirmed DTCs with the HDS.

   Is DTC P0627 indicated?

   YES—Go to step 5.

   NO—Intermittent failure, the system is OK at this time. Check for poor connections or loose terminals at the fuel pump control module, PGM-FI main relay 2 (FUEL PUMP), the fuel tank unit, and the PCM. ■

5. Turn the ignition switch to LOCK (0).
6. Disconnect the fuel pump control module 10P connector (see page 11-349).
7. Turn the ignition switch to ON (II), and measure the voltage between fuel pump control module 10P connector terminals No. 3 and No. 8 within 2 seconds.

FUEL PUMP CONTROL MODULE 10P CONNECTOR

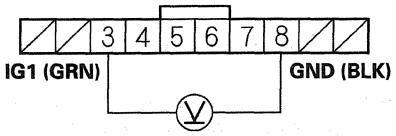

Wire side of female terminals

Is there battery voltage?

YES—Go to step 22.

NO—Go to step 8.

8. Turn the ignition switch to LOCK (0).
9. Remove the left kick panel (see step 3 on page 20-67), then remove PGM-FI main relay 2 (FUEL PUMP) (A) from the driver's under-dash fuse/relay box.

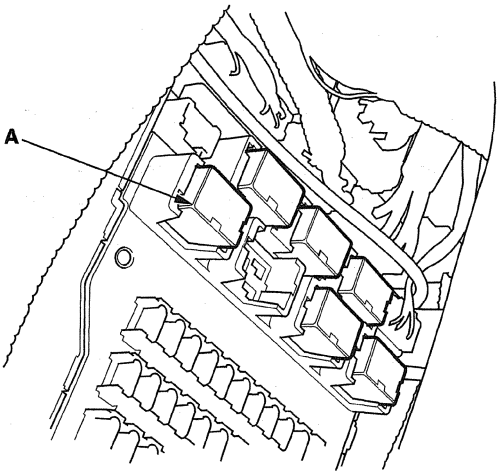

(cont'd)

DTC Troubleshooting (cont'd)

10. Test PGM-FI main relay 2 (FUEL PUMP) (see page 22-93).

    Is PGM-FI main relay 2 (FUEL PUMP) OK?

    YES—Go to step 11.

    NO—Replace PGM-FI main relay 2 (FUEL PUMP), then go to step 67.

11. Turn the ignition switch to ON (II).

12. Measure the voltage between PGM-FI main relay 2 (FUEL PUMP) 4P connector terminal No. 3 and body ground.

PGM-FI MAIN RELAY 2 (FUEL PUMP) 4P CONNECTOR

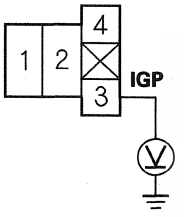

Terminal side of female terminals

Is there battery voltage?

YES—Go to step 13.

NO—
- Replace PGM-FI main relay 1 (FI MAIN), then go to step 67.
- If needed, replace the driver's under-dash fuse/relay box (see page 22-88), then go to step 67.

13. Measure the voltage between PGM-FI main relay 2 (FUEL PUMP) 4P connector terminal No. 1 and body ground.

PGM-FI MAIN RELAY 2 (FUEL PUMP) 4P CONNECTOR

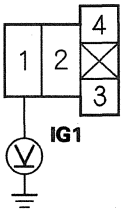

Terminal side of female terminals

Is there battery voltage?

YES—Go to step 14.

NO—Replace the driver's under-dash fuse/relay box (see page 22-88), then go to step 67.

14. Turn the ignition switch to LOCK (0).

15. Connect PGM-FI main relay 2 (FUEL PUMP) 4P connector terminals No. 1 and No. 2 with a jumper wire.

PGM-FI MAIN RELAY 2 (FUEL PUMP) 4P CONNECTOR

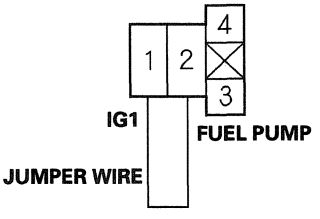

Terminal side of female terminals

16. Turn the ignition switch to ON (II), and measure the voltage between fuel pump control module 10P connector terminal No. 3 and body ground within 2 seconds.

FUEL PUMP CONTROL MODULE 10P CONNECTOR

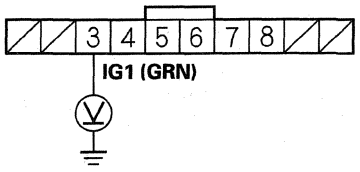

Wire side of female terminals

Is there battery voltage?

YES—Go to step 17.

NO—
- Repair open in the wire between the driver's under-dash fuse/relay box and the fuel pump control module, then go to step 67.
- If needed, replace the driver's under-dash fuse/relay box (see page 22-88), then go to step 67.

17. Turn the ignition switch to LOCK (0).

18. Jump the SCS line with the HDS.

19. Disconnect PCM connector E (31P).

20. Connect PGM-FI main relay 2 (FUEL PUMP) 4P connector terminal No. 4 to body ground with a jumper wire.

PGM-FI MAIN RELAY 2 (FUEL PUMP) 4P CONNECTOR

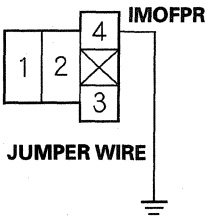

Terminal side of female terminals

21. Check for continuity between PCM connector terminal E2 and body ground.

PCM CONNECTOR E (31P)

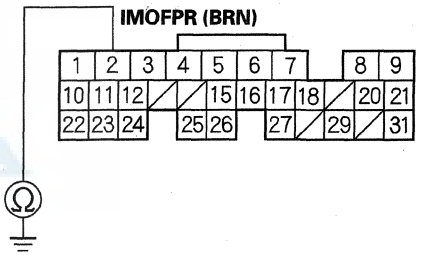

Wire side of female terminals

Is there continuity?

YES—Go to step 73.

NO—Repair open in the wire between the PCM (E2) and PGM-FI main relay 2 (FUEL PUMP), then go to step 67.

(cont'd)

DTC Troubleshooting (cont'd)

22. Turn the ignition switch to LOCK (0).
23. Reconnect the fuel pump control module 10P connector (see page 11-349).
24. Turn the ignition switch to ON (II).
25. Clear the DTC with the HDS.
26. Turn the ignition switch to LOCK (0).
27. Turn the ignition switch to ON (II), and check for sound from the fuel pump within 2 seconds.

    Does the fuel pump operate?

    YES—Go to step 28.

    NO—Go to step 47.
28. Turn the ignition switch to LOCK (0).
29. Disconnect the fuel pump control module 10P connector.
30. Check for continuity between fuel pump control module 10P connector terminal No. 4 and body ground.

FUEL PUMP CONTROL MODULE 10P CONNECTOR

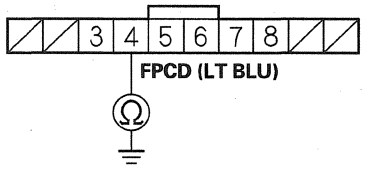

Wire side of female terminals

Is there continuity?

YES—Go to step 31.

NO—Go to step 34.

31. Jump the SCS line with the HDS.
32. Disconnect PCM connector E (31P).
33. Check for continuity between PCM connector terminal E20 and body ground.

PCM CONNECTOR E (31P)

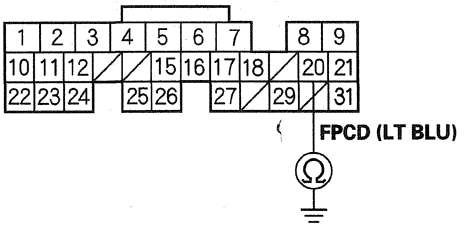

Wire side of female terminals

Is there continuity?

YES—Repair short in the wire between the PCM (E20) and the fuel pump control module, then go to step 67.

NO—Go to step 73.

34. Jump the SCS line with the HDS.
35. Disconnect PCM connector E (31P).
36. Connect fuel pump control module 10P connector terminal No. 4 to body ground with a jumper wire.

FUEL PUMP CONTROL MODULE 10P CONNECTOR

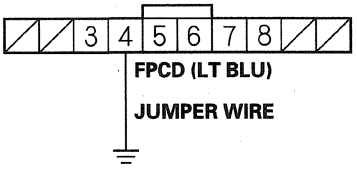

Wire side of female terminals

37. Check for continuity between PCM connector terminal E20 and body ground.

PCM CONNECTOR E (31P)

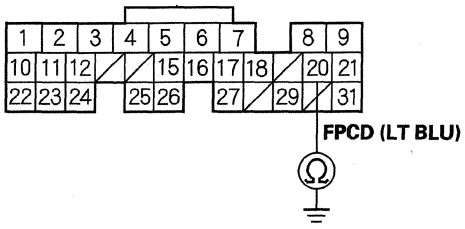

Wire side of female terminals

Is there continuity?

YES—Go to step 38.

NO—Repair open in the wire between the PCM (E20) and the fuel pump control module, then go to step 67.

38. Remove the jumper wire from the fuel pump control module 10P connector.

39. Reconnect the fuel pump control module 10P connector and PCM connector E (31P).

40. Turn the ignition switch to ON (II).

41. Measure the voltage between PCM connector terminal E20 and body ground.

PCM CONNECTOR E (31P)

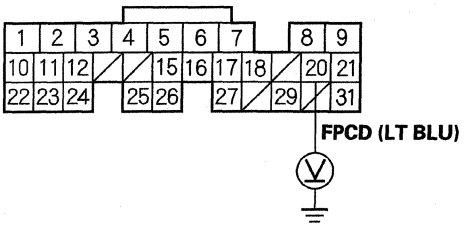

Wire side of female terminals

Is there about 8 V or more?

YES—Go to step 42.

NO—Replace the fuel pump control module (see page 11-349), then go to step 67.

42. Turn the ignition switch to LOCK (0).

43. Remove the rear seat cushion (see page 20-140).

44. Remove the access panel from the floor.

45. Disconnect the fuel pump 5P connector.

(cont'd)

DTC Troubleshooting (cont'd)

46. Check for continuity between fuel pump control module 10P connector terminal No. 7 and body ground.

FUEL PUMP CONTROL MODULE 10P CONNECTOR

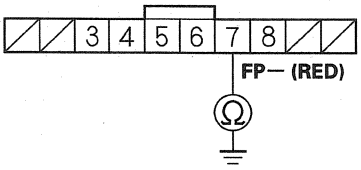

Wire side of female terminals

Is there continuity?

YES—Repair short in the wire between the fuel pump control module (FP— line) and the fuel pump, then go to step 67.

NO—Substitute a known-good fuel pump control module (see page 11-349), then go to step 67 and recheck. If DTC P0627 is not indicated, replace the original fuel pump control module (see page 11-349), then go to step 67. If DTC P0627 is indicated, go to step 73.

47. Turn the ignition switch to LOCK (0).

48. Disconnect the fuel pump control module 10P connector (see page 11-349).

49. Check for continuity between fuel pump control module 10P connector terminal No. 8 and body ground.

FUEL PUMP CONTROL MODULE 10P CONNECTOR

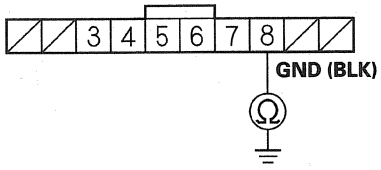

Wire side of female terminals

Is there continuity?

YES—Go to step 50.

NO—Repair open in the wire between the fuel pump control module (GND line) and G603, then go to step 67.

50. Check for continuity between fuel pump control module 10P connector terminal No. 5 and body ground.

FUEL PUMP CONTROL MODULE 10P CONNECTOR

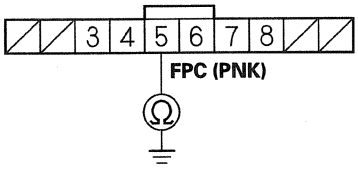

Wire side of female terminals

Is there continuity?

YES—Go to step 51.

NO—Go to step 54.

51. Jump the SCS line with the HDS.

52. Disconnect PCM connector E (31P).

53. Check for continuity between PCM connector terminal E7 and body ground.

PCM CONNECTOR E (31P)

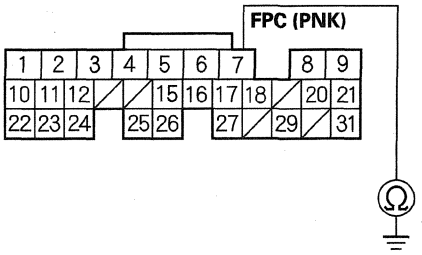

Wire side of female terminals

Is there continuity?

YES—Repair short in the wire between the PCM (E7) and the fuel pump control module, then go to step 67.

NO—Go to step 73.

54. Reconnect the fuel pump control module 10P connector.

55. Turn the ignition switch to ON (II), and measure the voltage between PCM connector terminal E7 and body ground within 2 seconds.

PCM CONNECTOR E (31P)

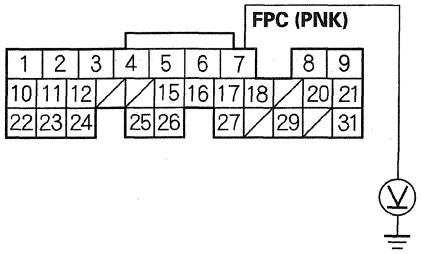

Wire side of female terminals

Is there battery voltage?

YES—Go to step 56.

NO—Replace the fuel pump control module (see page 11-349), then go to step 67.

56. Turn the ignition switch to LOCK (0).

57. Remove the rear seat cushion (see page 20-140).

58. Remove the access panel from the floor.

59. Disconnect the fuel pump 5P connector.

60. Disconnect the fuel pump control module 10P connector (see page 11-349).

61. Connect fuel pump 5P connector terminal No. 5 to body ground with a jumper wire.

FUEL PUMP 5P CONNECTOR

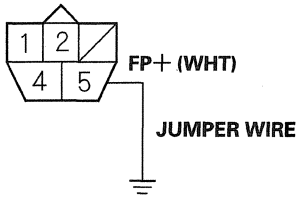

Wire side of female terminals

(cont'd)

DTC Troubleshooting (cont'd)

62. Check for continuity between fuel pump control module 10P connector terminal No. 6 and body ground.

FUEL PUMP CONTROL MODULE 10P CONNECTOR

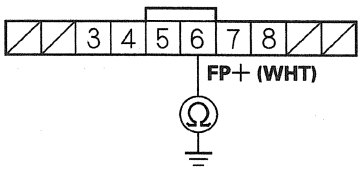

Wire side of female terminals

Is there continuity?

YES—Go to step 63.

NO—Repair open in the wire between the fuel pump control module (FP+ line) and the fuel pump, then go to step 67.

63. Connect fuel pump 5P connector terminal No. 4 to body ground with a jumper wire.

FUEL PUMP 5P CONNECTOR

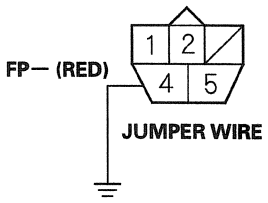

Wire side of female terminals

64. Check for continuity between fuel pump control module 10P connector terminal No. 7 and body ground.

FUEL PUMP CONTROL MODULE 10P CONNECTOR

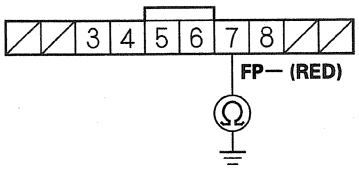

Wire side of female terminals

Is there continuity?

YES—Go to step 65.

NO—Repair open in the wire between the fuel pump control module (FP— line) and the fuel pump, then go to step 67.

65. Reconnect the fuel pump control module 10P connector.

66. Turn the ignition switch to ON (II), and measure the voltage between fuel pump 5P connector terminal No. 5 and body ground within 2 seconds.

FUEL PUMP 5P CONNECTOR

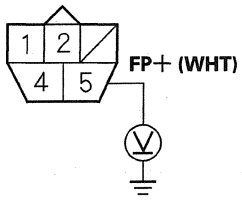

Wire side of female terminals

Is there battery voltage?

YES—Replace the fuel pump (see page 11-349), then go to step 67.

NO—Substitute a known-good fuel pump control module (see page 11-349), then go to step 67 and recheck. If DTC P0627 is not indicated, replace the original fuel pump control module (see page 11-349), then go to step 67. If DTC P0627 is indicated, go to step 73.

67. Turn the ignition switch to LOCK (0).

68. Reconnect all connectors.

69. Turn the ignition switch to ON (II).

70. Reset the PCM with the HDS.

71. Do the PCM idle learn procedure (see page 11-313).

72. Check for Pending or Confirmed DTCs with the HDS.

Is DTC P0627 indicated?

YES—Check for poor connections or loose terminals at the fuel pump control module, PGM-FI main relay 2 (FUEL PUMP), the fuel pump, and the PCM, then go to step 1.

NO—Troubleshooting is complete. If any other Pending or Confirmed DTCs are indicated, go to the indicated DTC's troubleshooting. ■

73. Reconnect all connectors.

74. Update the PCM if it does not have the latest software (see page 11-230), or substitute a known-good PCM (see page 11-7).

75. Check for Pending or Confirmed DTCs with the HDS.

Is DTC P0627 indicated?

YES—Check for poor connections or loose terminals at the fuel pump control module, PGM-FI main relay 2 (FUEL PUMP), the fuel pump, and the PCM. If the PCM was updated, substitute a known-good PCM (see page 11-7), then recheck. If the PCM was substituted, go to step 1.

NO—If the PCM was updated, troubleshooting is complete. If the PCM was substituted, replace the original PCM (see page 11-232). If any other Pending or Confirmed DTCs are indicated, go to the indicated DTC's troubleshooting. ■

Fuel Pressure Relieving

Before disconnecting fuel lines or hoses, relieve pressure from the system by stopping the fuel pump and disconnecting the fuel tube/quick connect fitting in the engine compartment.

With the HDS

1. Turn the ignition switch to LOCK (0).
2. Connect the HDS to the data link connector (DLC) (A) located under the driver's side of the dashboard.

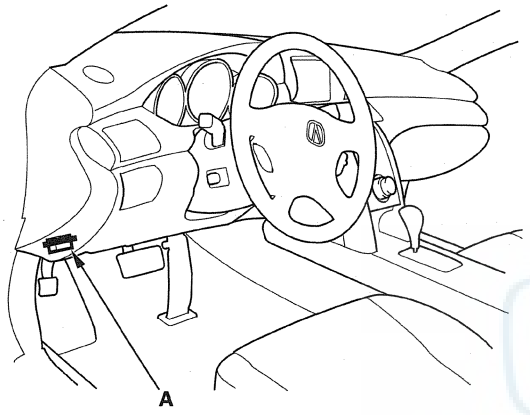

3. Turn the ignition switch to ON (II).
4. Make sure the HDS communicates with the PCM. If it doesn't, go to the DLC circuit troubleshooting (see page 11-211).
5. Turn the ignition switch to LOCK (0).
6. Remove the fuel fill cap to relieve the pressure in the fuel tank.
7. Turn the ignition switch to ON (II).
8. From the INSPECTION MENU of the HDS, select Fuel Pump OFF, then start the engine, and let it idle until it stalls.

   NOTE:
   - Do not allow the engine to idle above 1,000 rpm or the PCM will continue to operate the fuel pump.
   - A Pending or Confirmed DTC may be set during this procedure. Check for DTCs, and clear them as needed (see page 11-4).

9. Turn the ignition switch to LOCK (0).
10. Do the battery terminal disconnection procedure (see page 22-91).
11. Remove the quick-connect fitting cover (A).

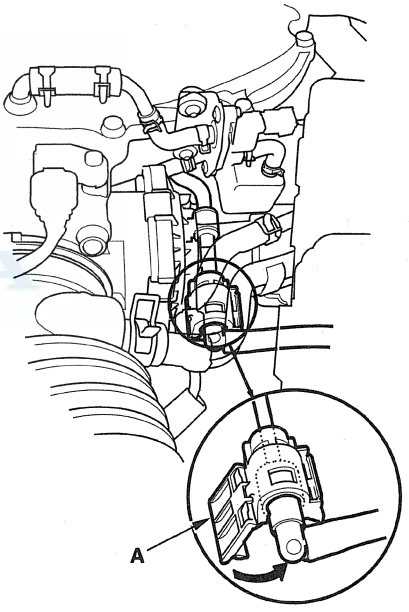

12. Check the fuel quick-connect fitting for dirt, and clean it if needed.

13. Place a rag or a shop towel over the quick-connect fitting (A).

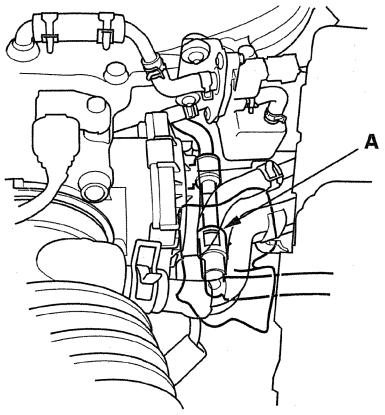

14. Disconnect the quick-connect fitting (A): Hold the connector (B) with one hand, and squeeze the retainer tabs (C) with the other hand to release them from the locking tabs (D). Pull the connector off.

    NOTE:
    - Be careful not to damage the line (E) or other parts.
    - Do not use tools.
    - If the connector does not move, keep the retainer tabs pressed down, and alternately pull and push the connector until it comes off easily.
    - Do not remove the retainer from the line; once removed, the retainer must be replaced with a new one.

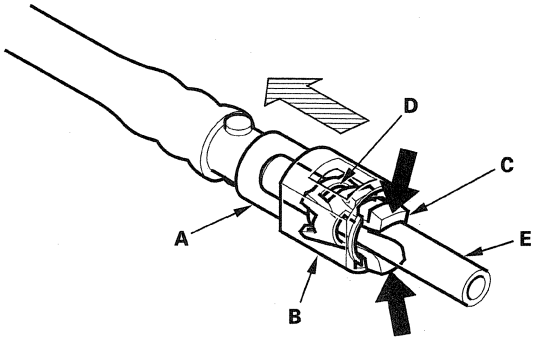

15. After disconnecting the quick-connect fitting, check it for dirt or damage (see step 5 on page 11-343).

16. Do the battery terminal reconnection procedure (see page 22-91).

(cont'd)

Fuel Pressure Relieving (cont'd)

Without the HDS

1. Remove the left kick panel (see step 3 on page 20-67).
2. Remove PGM-FI main relay 2 (FUEL PUMP) (A) from the driver's under-dash fuse/relay box.

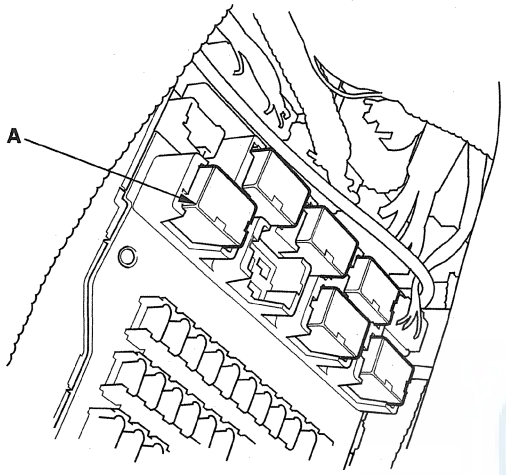

3. Start the engine, and let it idle until it stalls.

   NOTE: If any DTCs are stored, clear and ignore them.

4. Turn the ignition switch to LOCK (0).
5. Remove the fuel fill cap to relieve the pressure in the fuel tank.
6. Do the battery terminal disconnection procedure (see page 22-91).
7. Remove the quick-connect fitting cover (A).

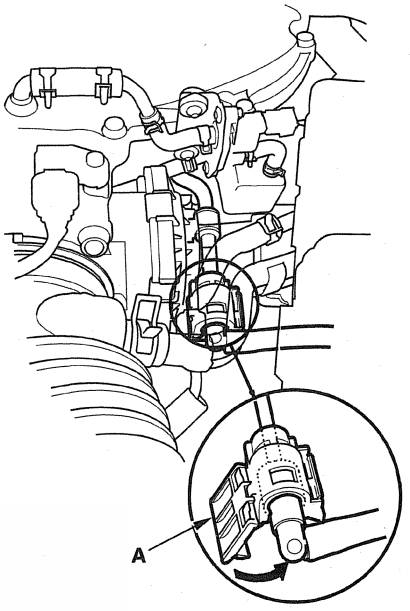

8. Check the fuel quick-connect fitting for dirt, and clean it if needed.
9. Place a rag or a shop towel over the quick-connect fitting (A).

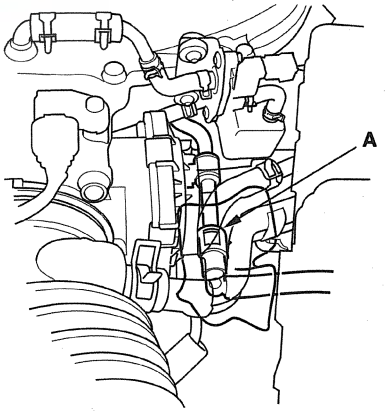

10. Disconnect the quick-connect fitting (A): Hold the connector (B) with one hand, and squeeze the retainer tabs (C) with the other hand to release them from the locking tabs (D). Pull the connector off.

    NOTE:
    - Be careful not to damage the line (E) or other parts.
    - Do not use tools.
    - If the connector does not move, keep the retainer tabs pressed down, and alternately pull and push the connector until it comes off easily.
    - Do not remove the retainer from the line; once removed, the retainer must be replaced with a new one.

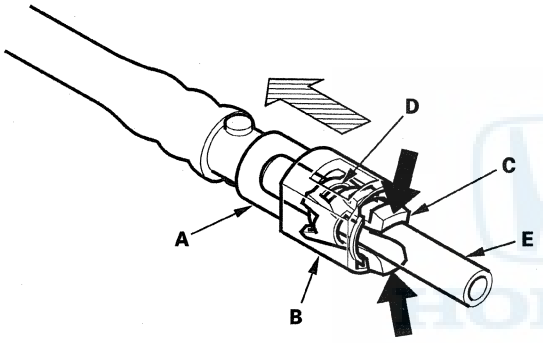

11. After disconnecting the quick-connect fitting, check it for dirt or damage (see step 5 on page 11-343).

12. Do the battery terminal reconnection procedure (see page 22-91).

Fuel Pressure Test

Special Tools Required
- Fuel pressure gauge 07406-004000B
- Fuel pressure gauge attachment set 07AAJ-S6MA150

1. Relieve the fuel pressure (see page 11-332).

2. Attach the fuel pressure gauge set and the fuel pressure gauge.

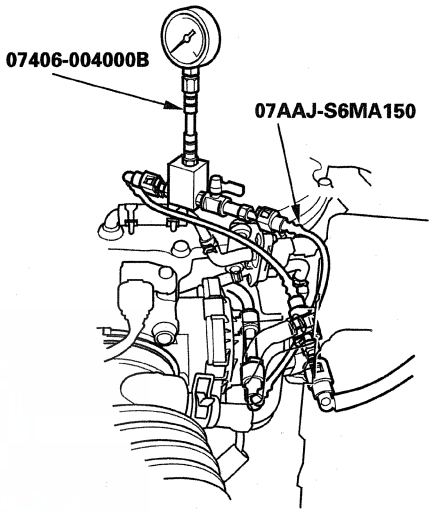

3. Start the engine, and let it idle.

    - If the engine starts, go to step 5.
    - If the engine does not start, go to step 4.

4. Check to see if the fuel pump is running: Listen to the fuel filler port with the fuel fill cap removed. The fuel pump should run for 2 seconds when the ignition switch is first turned to ON (II).

    - If the pump runs, go to step 5.
    - If the pump does not run, refer to the DTC troubleshooting.

5. Read the fuel pressure gauge. The pressure should be 390—440 kPa (4.0—4.5 kgf/cm^2, 57—64 psi).

    - If the pressure is OK, the test is complete.
    - If the pressure is out of specification, replace the fuel pressure regulator (see page 11-348) and the fuel filter (see page 11-348), then recheck the fuel pressure.

Transfer Fuel Pump Test

Special Tools Required
Vacuum pump/gauge, 0—30 in.Hg, Snap-on YA4000A or equivalent, commercially available

NOTE: If the fuel tank is full, drain the fuel (see page 11-337).

1. Remove the fuel tank unit (see page 11-347).
2. Disconnect the transfer tube (A), then connect a vacuum pump/gauge, 0—30 in.Hg, to the fuel tank unit.

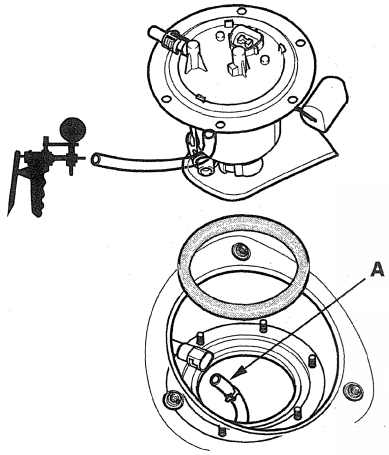

3. Connect the fuel pump 5P connector.
4. Lower the fuel tank unit (A) into the fuel tank until the pick up screen is submerged in the fuel.

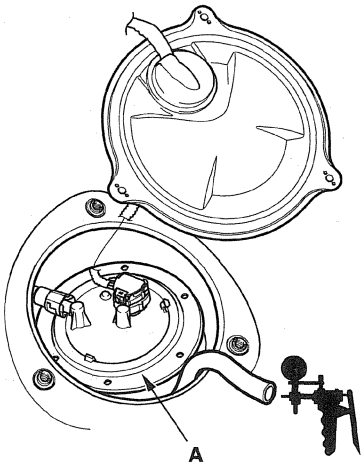

5. Turn the ignition switch to ON (II).
6. From the INSPECTION MENU of the HDS, select Fuel Pump ON.
7. Read the vacuum pump/gauge. The vacuum should be 4.0 kPa (1.2 in.Hg, 30 mmHg).
   - If the vacuum is OK, go to step 8.
   - If the vacuum is out of specification, replace the fuel tank unit (see page 11-347), then recheck the fuel vacuum.
8. Connect the vacuum pump/gauge to the transfer tube.

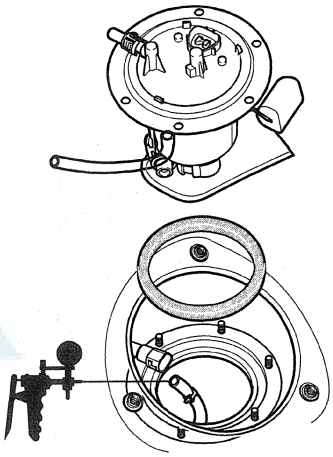

9. Apply vacuum to the transfer tube.
   - If the vacuum holds, replace the fuel tank (see page 11-351).
   - If the vacuum does not hold, the transfer fuel pump and the transfer tube are OK.

Fuel Tank Draining

1. Remove the secondary fuel gauge sending unit (see page 11-350).
2. Using a hand pump, a hose, and a container suitable for fuel, draw the fuel from the secondary fuel gauge sending unit side of the tank.
3. Remove the fuel tank unit (see page 11-347).
4. Using a hand pump, a hose, and a container suitable for fuel, draw the fuel from the fuel tank unit side of the tank.

Fuel Line Inspection

Check the fuel system lines, hoses, and fuel filter for damage, leaks, or deterioration. Replace any damaged parts.

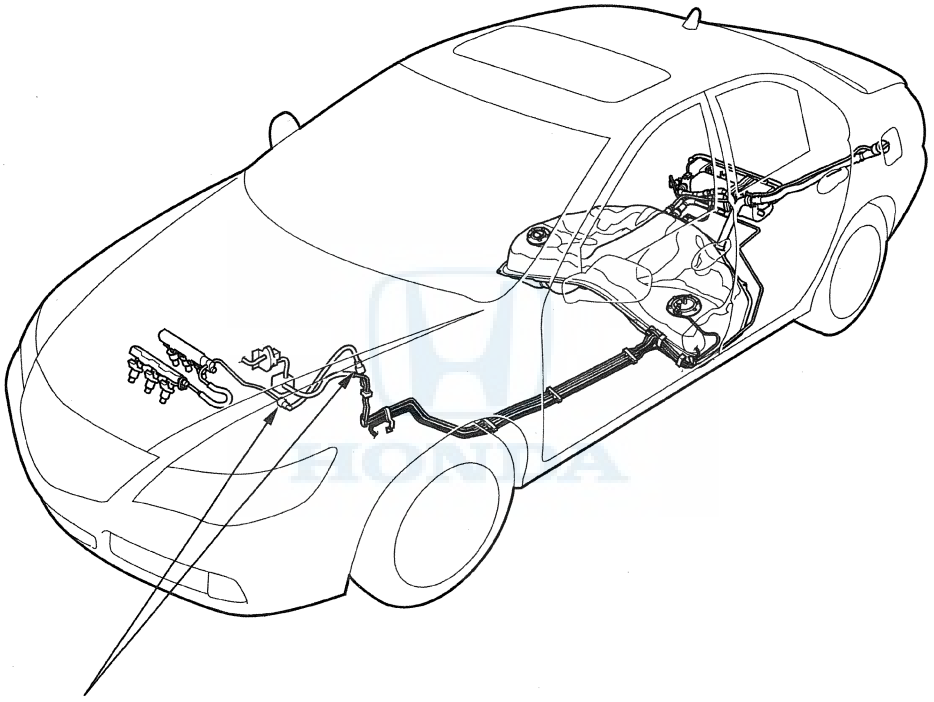

Make sure the connections are secure and the quick-connect fitting covers are firmly locked in place.

Check all clamps, and make sure they are properly positioned and tightened.

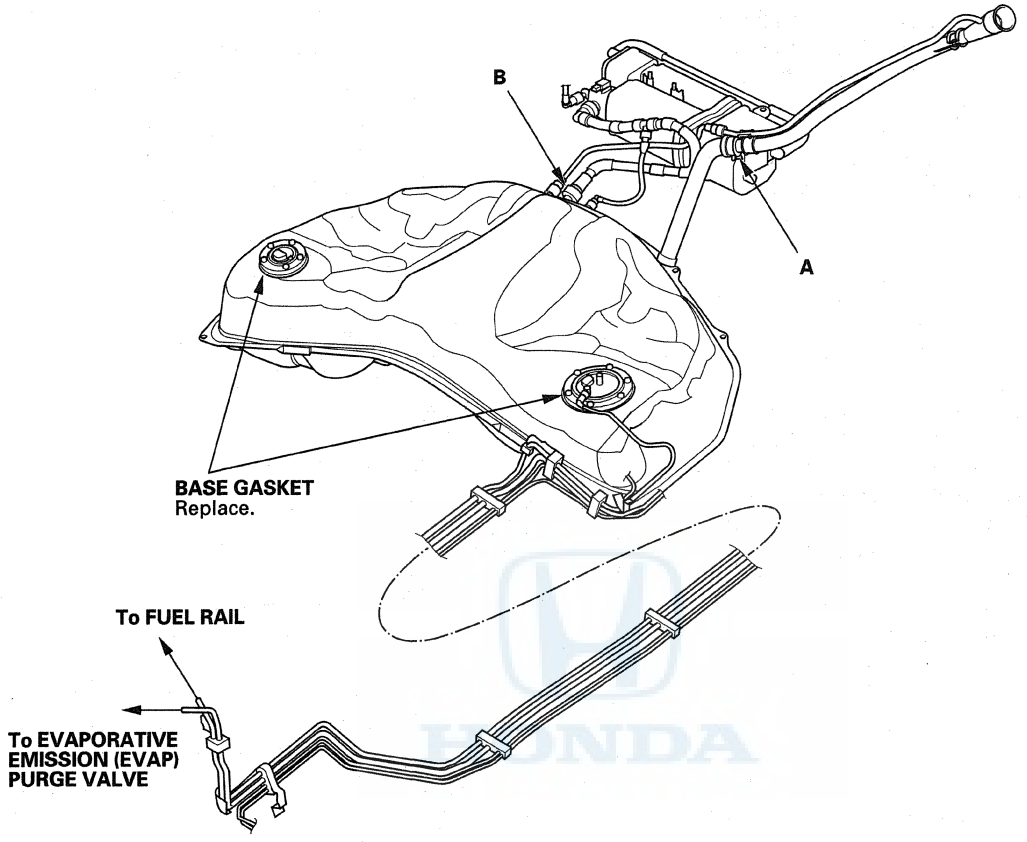

A:

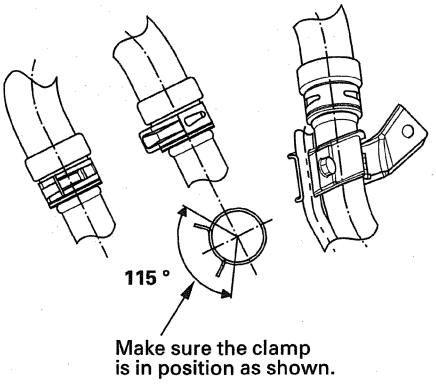

B:

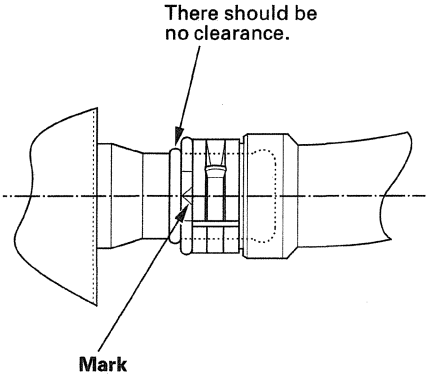

Fuel Line/Quick-Connect Fitting Precautions

The fuel line/quick-connect fittings (A, B, C, D, E, and F) connect the fuel joint hose (G) to the fuel feed hose (H), the fuel feed hose to the fuel hose (I), the fuel line (J) to the fuel tank unit (K), the fuel vapor line (L) to the EVAP canister (M), the fuel tank (N) to the fuel tank vapor recirculation tube (O), the fuel tank vapor recirculation tube to the fuel fill pipe (P), and the fuel tank to the fuel tank vapor control line (Q). When removing or installing the fuel feed hose, the fuel tank unit, or the fuel tank, or when disconnecting or connecting the quick-connect fitting, pay attention to the following:

- The fuel feed hoses, the fuel lines, and the quick-connect fittings are not heat-resistant; be careful not to damage them during welding or other heat-generating procedures.
- The fuel feed hoses, the fuel lines, and the quick-connect fittings are not acid-proof; do not touch them with a shop towel that was used for wiping battery electrolyte. Replace them if they come in contact with electrolyte or something similar.
- When connecting or disconnecting the fuel feed hoses, the fuel lines, and the quick-connect fittings, be careful not to bend or twist them excessively. Replace them if they are damaged.

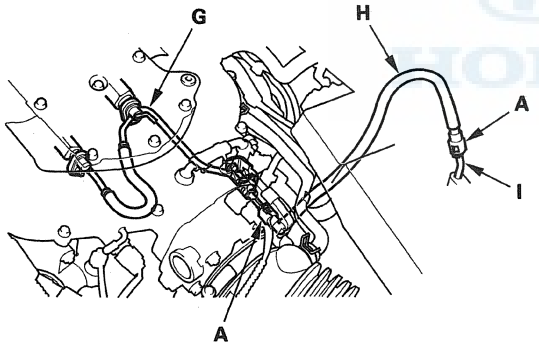

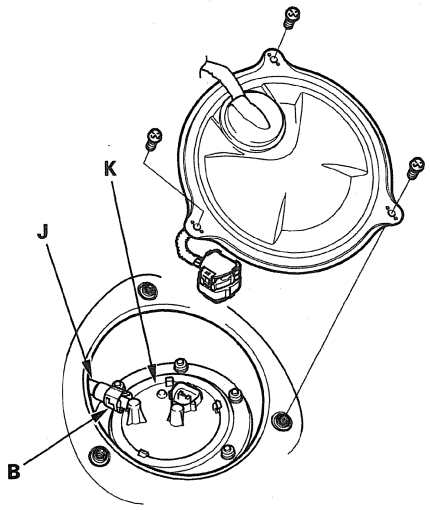

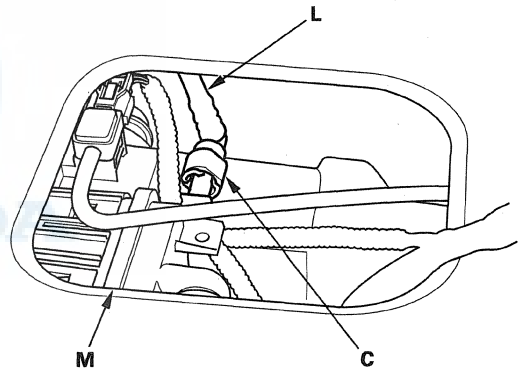

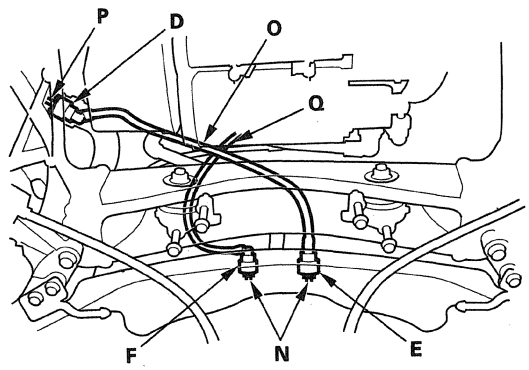

A disconnected quick-connect fitting can be reconnected, but the retainer on the mating line cannot be reused once it has been removed from the line. Replace the retainer when:

- replacing the fuel rail.
- replacing the fuel line.
- replacing the fuel pump.
- replacing the fuel filter.
- replacing the fuel gauge sending unit.
- replacing the EVAP canister.
- replacing the fuel fill pipe.
- replacing the fuel tank.
- it has been removed from the line.
- it is damaged.
- Use the same manufacturer retainer and the same size when replacing the retainer.

Location	Manufacturer	Retainer color	Line diameter
A	Tokai	Blue green	0.3 in (8 mm)
B	Sanoh	White	0.4 in (9.5 mm)
C	Sanoh	White	0.4 in (9.5 mm)
D	Tokai	Natural	0.5 in (11.8 mm)
E	Tokai	Natural	0.5 in (11.8 mm)
F	Tokai	Green	0.2 in (6.3 mm)

Fuel Line/Quick-Connect Fitting Removal

NOTE: Before you work on the fuel lines and fittings, read the Fuel Line/Quick-Connect Fitting Precautions (see page 11-340).

1. If equipped, remove the quick-connect fitting cover from the fuel line. Raise the cover (A) from the fuel line (B), and remove it as shown.

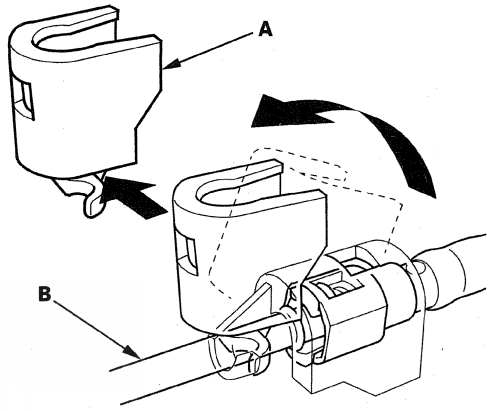

2. Relieve the fuel pressure (see page 11-332).

3. Check the fuel quick-connect fittings (A) for dirt, and clean them if needed.

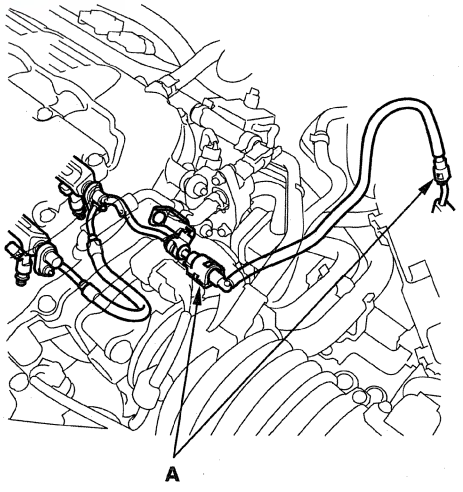

(cont'd)

Fuel Line/Quick-Connect Fitting Removal (cont'd)

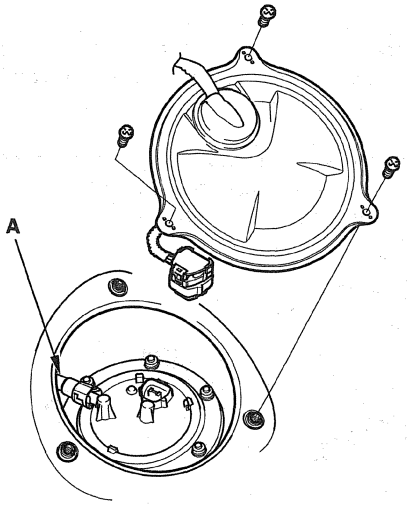

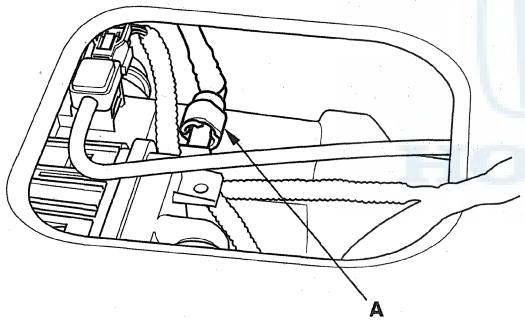

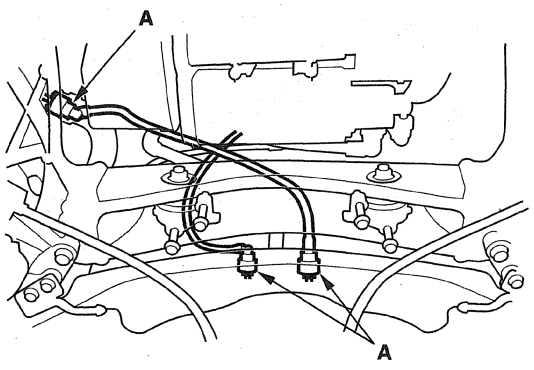

4. Place a rag or a shop towel over the quick-connect fitting. Hold the connector (A) with one hand, and squeeze the retainer tabs (B) with the other hand to release them from the locking tabs (C). Pull the connector off.

   NOTE:
   - Be careful not to damage the line (D) or other parts. Do not use tools.
   - If the connector does not move, keep the retainer tabs pressed down, and alternately pull and push the connector until it comes off easily.
   - Do not remove the retainer from the line; once removed, the retainer must be replaced with a new one.

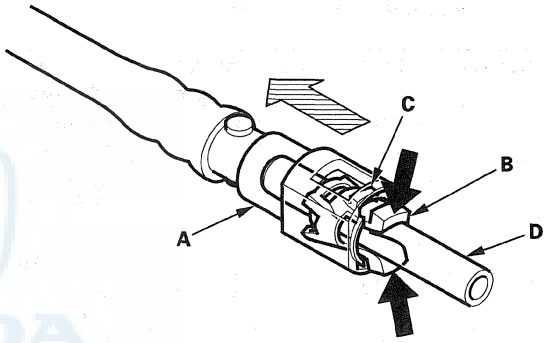

5. Check the contact area (A) of the line (B) for dirt or damage.

   - If it is dirty, clean it, then dry it with compressed air.
   - If it is damaged, replace the fuel filter or the fuel feed line.

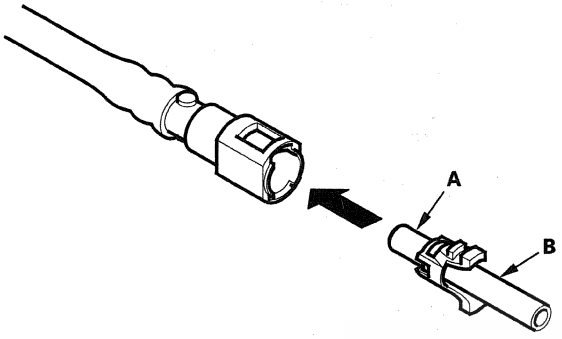

6. To prevent damage and keep foreign matter out, cover the disconnected connector and line ends with plastic bags (A).

   NOTE: The retainer cannot be reused once it has been removed from the line.
   Replace the retainer when:

   - replacing the fuel rail.
   - replacing the fuel line.
   - replacing the fuel pump.
   - replacing the fuel filter.
   - replacing the fuel pressure regulator.
   - replacing the fuel gauge sending unit.
   - replacing the EVAP canister.
   - replacing the fuel fill pipe.
   - replacing the fuel tank.
   - it has been removed from the line.
   - it is damaged.

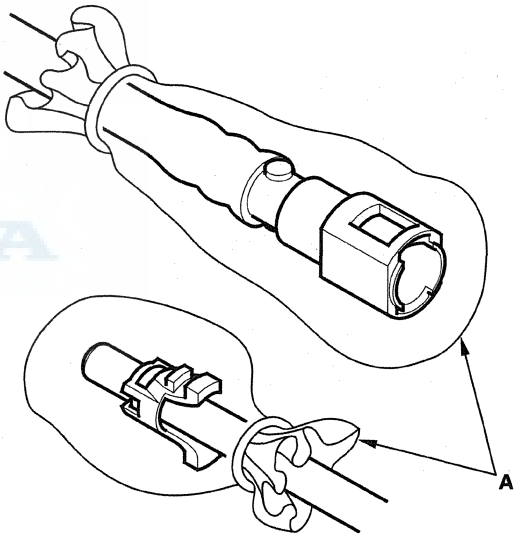

HONDA

Fuel Line/Quick-Connect Fitting Installation

NOTE: Before you work on the fuel lines and fittings, read the Fuel Line/Quick-Connect Fitting Precautions (see page 11-340).

1. Check the contact area (A) of the line (B) for dirt or damage, and clean it if needed.

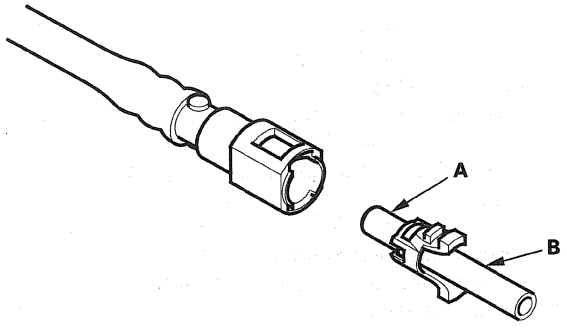

2. Insert a new retainer (A) into the connector (B) if the retainer is damaged, or after:

- replacing the fuel rail.
- replacing the fuel line.
- replacing the fuel pump.
- replacing the fuel filter.
- replacing the fuel pressure regulator.
- replacing the fuel gauge sending unit.
- replacing the EVAP canister.
- replacing the fuel fill pipe.
- replacing the fuel tank.
- removing the retainer from the line.
- Use the same manufacturer retainer and the same size when replacing the retainer (see page 11-340).

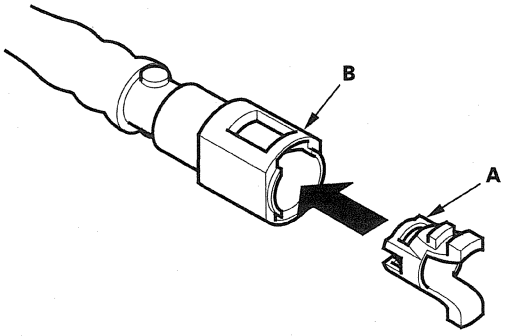

3. Before connecting a new fuel tube/quick-connect fitting assembly (A), remove the old retainer from the mating line.

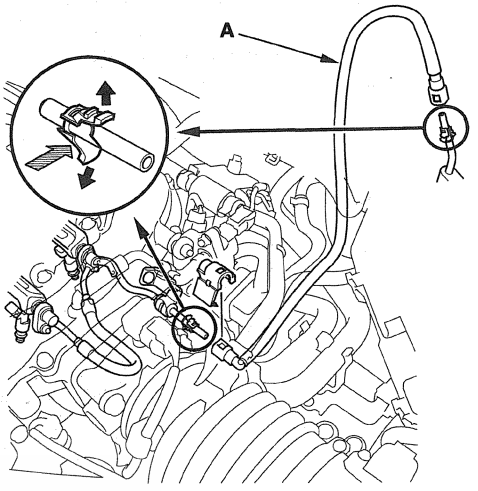

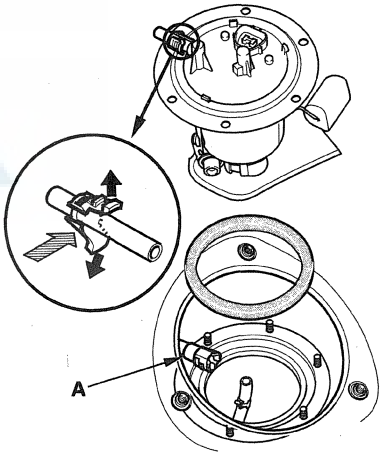

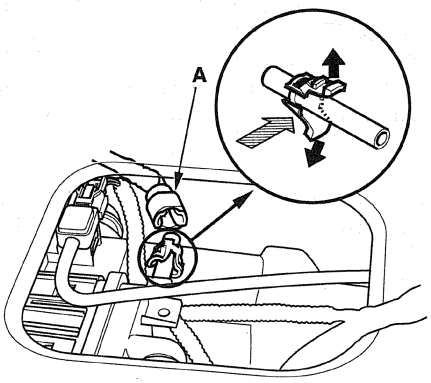

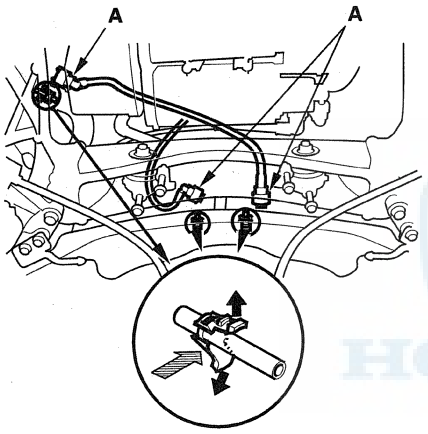

4. Align the quick-connect fittings with the line (A), and align the retainer locking tabs (B) with the connector grooves (C). Then press the quick-connect fittings onto the line until both retainer tabs lock with a clicking sound.

   NOTE: If it is hard to connect, put a small amount of new engine oil on the line end.

Connection with new retainer

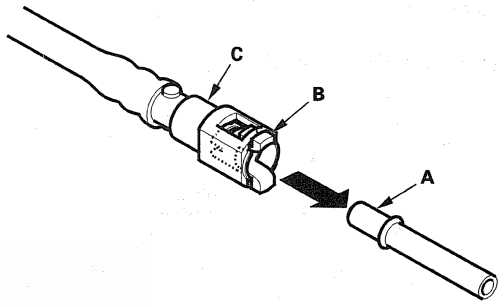

Reconnection to existing retainer

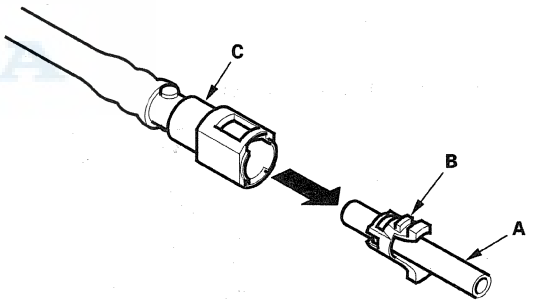

Connection to new fuel line

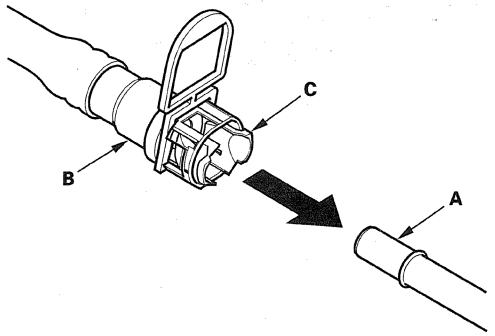

(cont'd)

Fuel Line/Quick-Connect Fitting Installation (cont'd)

5. When you reconnect the connector with the old retainer, make sure the connection is secure and the tabs (A) are firmly locked into place; check visually and also by pulling the connector (B). When you replace the fuel line with a new one, make sure you remove the ring pull (C) upwards after you confirm the connection is secure.

   NOTE: Before you remove the ring pull, make sure the fuel line connection is secure. If the connection is not secure, the ring pull could break when you try to remove it.

Reconnection to existing retainer

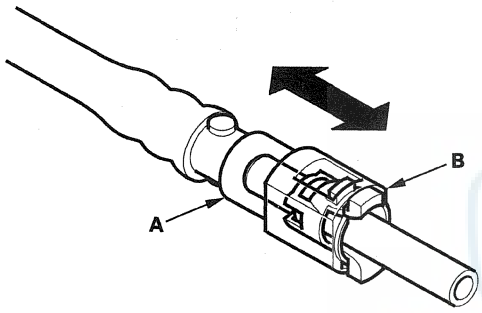

Connection to new fuel line

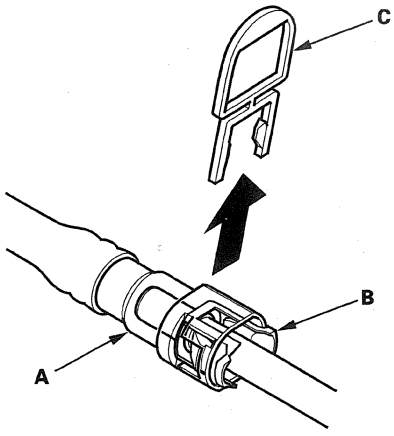

6. Do the battery terminal reconnection procedure (see page 22-91), and turn the ignition switch to ON (II) (but do not operate the starter motor). The fuel pump will run for about 2 seconds, and fuel pressure will rise. Repeat this two or three times, then check for fuel leaks.

7. If equipped, install the quick-connect fitting cover. Set the groove of the cover (A) on the fuel line (B) as shown, then install it. Make sure the cover is firmly locked in place.

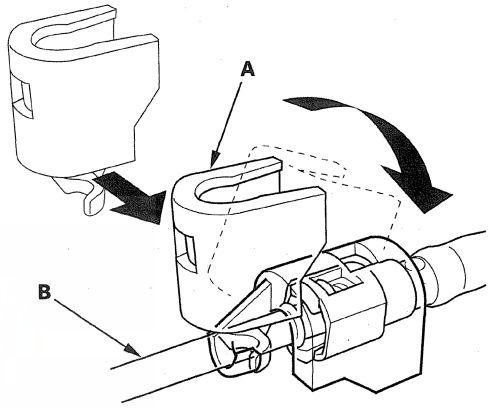

Fuel Tank Unit Removal and Installation

Removal

1. Relieve the fuel pressure (see page 11-332).
2. Remove the fuel fill cap.
3. Remove the rear seat cushion (see page 20-140).
4. Remove the access panel (A) from the left side of the floor.

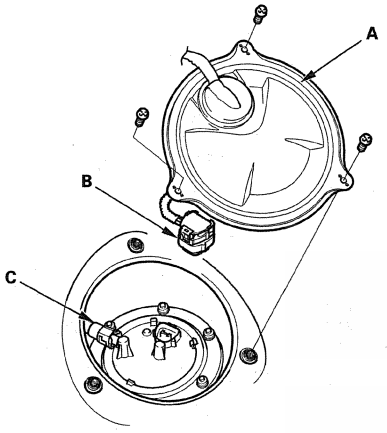

5. Disconnect the fuel tank pump 5P connector (B).
6. Disconnect the quick-connect fitting (C) from the fuel tank unit.
7. Remove the fuel tank unit (A), and disconnect the transfer tube (B).

   NOTE: If the fuel tank is full, drain the fuel (see page 11-337).

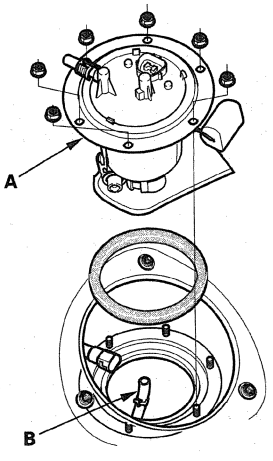

Installation

1. Connect the transfer tube (A).

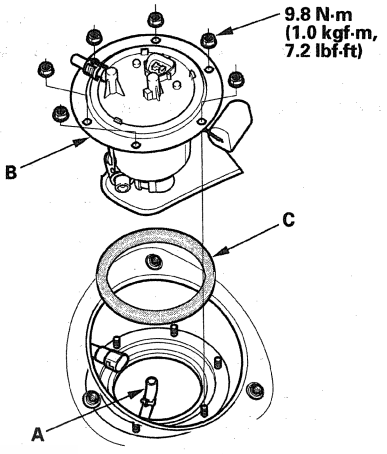

2. Install the fuel tank unit (B) in the reverse order of removal with a new base gasket (C).
3. Connect the fuel tank unit 5P connector (A), then connect the quick-connect fitting (B).

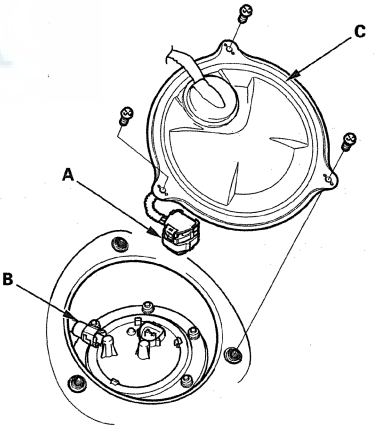

4. Install the fuel fill cap.
5. Turn the ignition switch to ON (II) (but do not operate the starter motor). The fuel pump will run for about 2 seconds, and fuel pressure rises. Repeat this two or three times, then check for fuel leaks.
6. Install the access panel (C).
7. Install the rear seat cushion (see page 20-140).

Fuel Pressure Regulator Replacement

NOTE: If the fuel tank is full, drain the fuel (see page 11-337).

1. Remove the fuel tank unit (see page 11-347).
2. Remove the fuel pressure regulator (A).

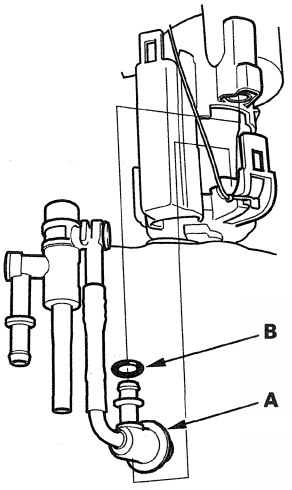

3. Install the parts in the reverse order of removal with a new O-ring (B).

   NOTE:
   - Coat the O-rings with clean engine oil; do not use any other oils or fluids.
   - Do not pinch the O-rings during installation.
   - Use all the new parts supplied in the pressure regulator replacement kit.

Fuel Filter Replacement

The fuel filter should be replaced whenever the fuel pressure drops below the specified value (see page 11-335), after making sure that the fuel pump and the fuel pressure regulator are OK.

NOTE: If the fuel tank is full, drain the fuel (see page 11-337).

1. Remove the fuel tank unit (see page 11-347).
2. Remove the fuel filter set (A).

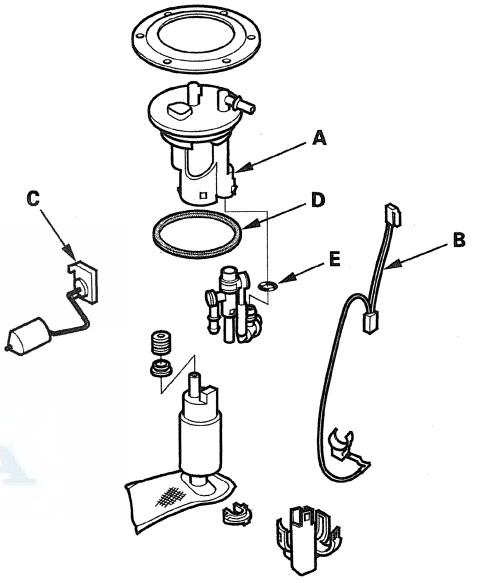

3. Check these items before installing the fuel tank unit:

   - When connecting the wire harness (B), make sure the connection is secure and the connectors are firmly locked into place.
   - When installing the fuel gauge sending unit (C), make sure the connection is secure and the connector is firmly locked into place. Be careful not to bend or twist it excessively.

4. Install the parts in the reverse order of removal with a new base gasket (D) and a new O-ring (E).

   NOTE:
   - Coat the O-rings with clean engine oil; do not use any other oils or fluids.
   - Do not pinch the O-rings during installation.
   - Use all the new parts supplied in the fuel filter replacement kit.

Fuel Pump/Fuel Gauge Sending Unit Replacement

1. Remove the fuel tank unit (see page 11-347).
2. Remove the fuel level sensor (fuel sending unit) (A) from the fuel tank unit (B).

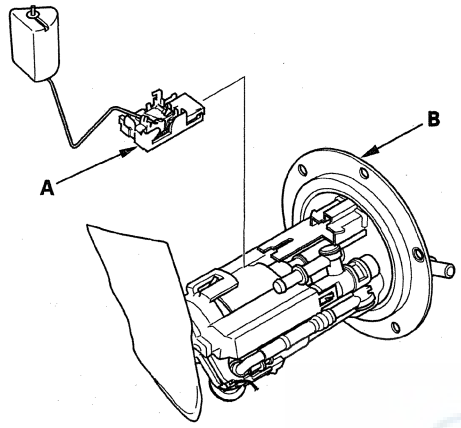

3. Before installing the fuel tank unit. Make sure the connection is secure. Be careful not to bend or twist it excessively.
4. Install the parts in the reverse order of removal. When installing the fuel tank unit, align the marks on the unit and the fuel tank (see page 11-347).

Fuel Pump Control Module Replacement

1. Remove the rear seat-back (see page 20-140).
2. Disconnect the fuel pump control module connector (A).

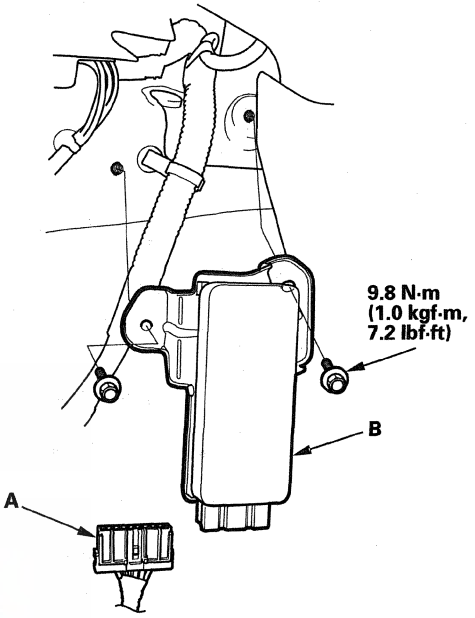

3. Remove the fuel pump control module (B).
4. Install the parts in the reverse order of removal.

Secondary Fuel Gauge Sending Unit Replacement

1. Relieve the fuel pressure (see page 11-332).
2. Remove the fuel cap.
3. Remove the rear seat cushion (see page 20-140).
4. Remove the access panel (A) from the right side of the floor.

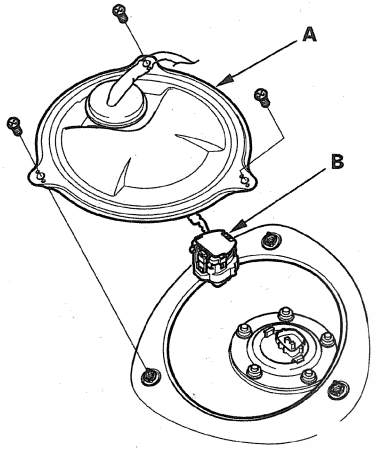

5. Disconnect the secondary fuel gauge sending unit 5P connector (B).
6. Remove the secondary fuel gauge sending unit (A).

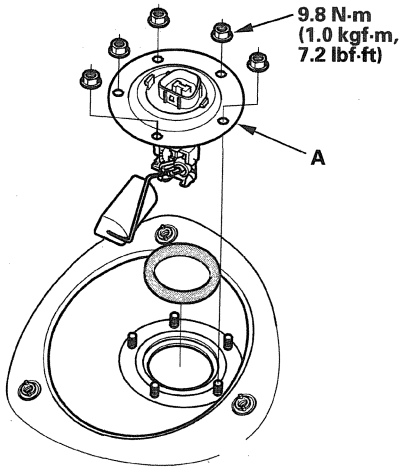

7. Remove the fuel gauge sending unit (A).

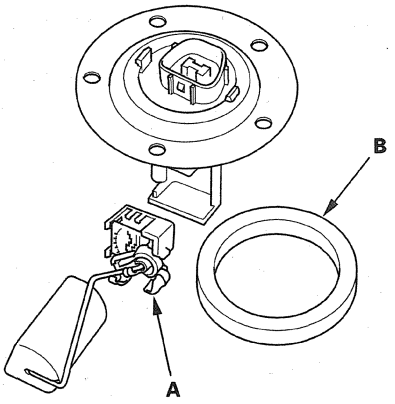

8. Install the parts in the reverse order of removal with a new base gasket (B).

   NOTE: When installing the fuel gauge sending unit, make sure the connection is secure and the connector is firmly locked into place. Be careful not to bend or twist it excessively.

Fuel Tank Replacement

1. Drain the fuel tank (see page 11-337).
2. Reinstall the fuel tank unit and the secondary fuel gauge sending unit without connecting the fuel tank unit 5P connector, the secondary fuel gauge sending unit 5P connector and the quick -connect fitting.
3. Remove the propeller shaft (see page 16-44).
4. Remove the rear differential (see page 15-101).
5. Raise the vehicle on a lift.
6. Remove the fuel tank covers (A) and parking brake cable bolts (B).

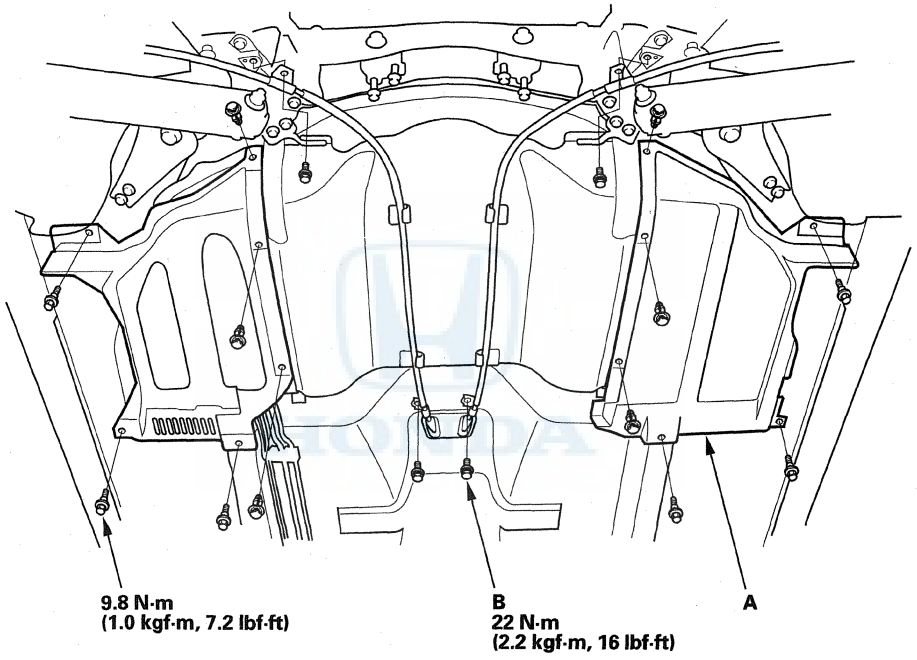

(cont'd)

Fuel Tank Replacement (cont'd)

7. Remove the clip (A) from the EVAP canister bracket.

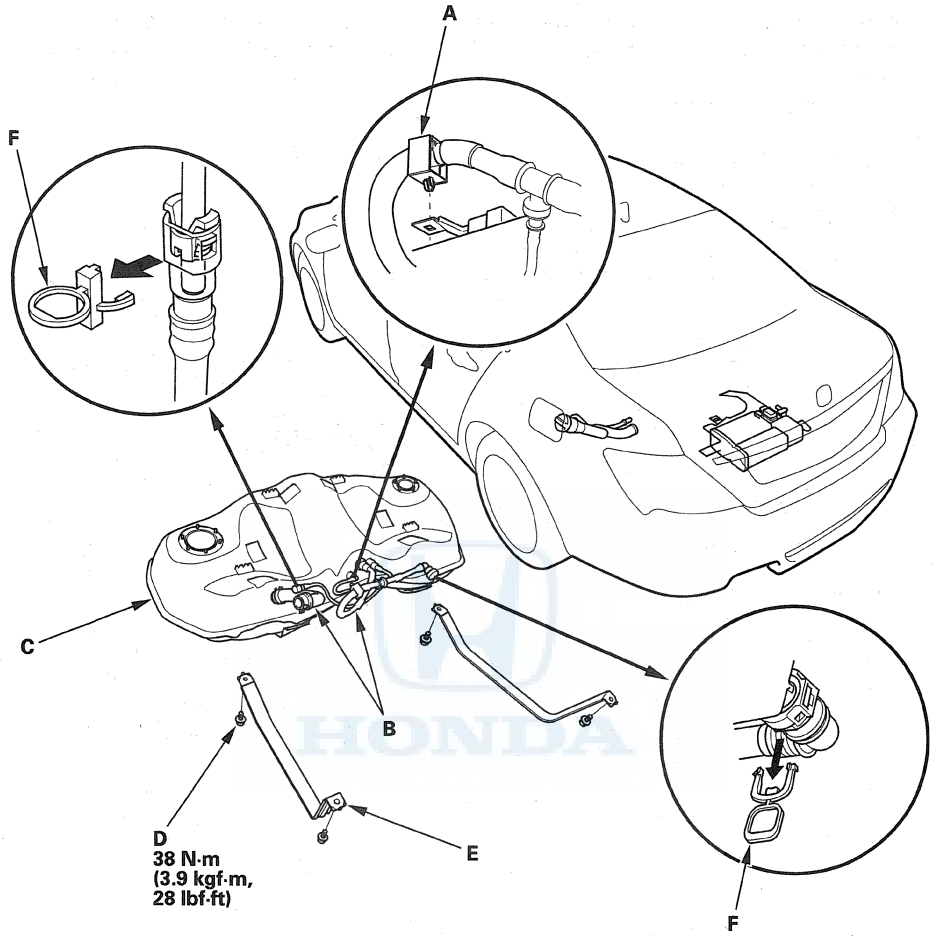

8. Disconnect the hoses (B). Slide back the clamps, then twist the hoses as you pull to avoid damaging them.
9. Place a jack or other support under the tank (C).
10. Remove the strap bolts (D), and the straps (E).
11. Remove the fuel tank. If it sticks to the undercoat on its mount, carefully pry it off the mount.
12. Install the parts in the reverse order of removal.

NOTE:
- The new fuel vent hose and the fuel vent return hose have ring pull (F) at the connectors. When you connect the hoses and confirm that the connections are secure, remove the ring pulls by pulling them down.
- Before connecting the fuel fill pipe and the quick-connect fitting, check for dirt, and clean it if needed, taking care not to damage the fuel fill pipe and other parts.

Fuel Fill Pipe Removal/Installation

1. Drain the fuel tank (see page 11-337).
2. Remove the left rear damper (see page 18-38).
3. Remove the fuel fill cap.
4. Disconnect the fuel fill tubes (A), from the fuel fill pipe (B).

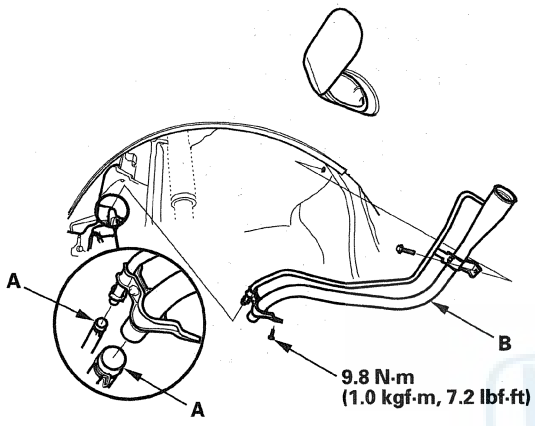

5. Remove the bolts and the fuel fill pipe.
6. Install the parts in the reverse order of removal.

   NOTE: Before connecting the fuel fill pipe and the quick-connect fitting, check for dirt, and clean it if needed, taking care not to damage the fuel fill pipe and other parts.

Fuel Gauge Sending Unit Test

NOTE: For the fuel gauge system circuit diagram, refer to the Gauges Circuit Diagram (see page 22-399).

1. Do multiplex integrated control system troubleshooting test mode A (see page 22-131).

   - If no problem is found, go to step 2.
   - If DTC B1175 is indicated, go to the DTC B1175 troubleshooting (see page 22-413).

2. Check the No. 21 METER (10 A) fuse in the driver's under-dash fuse/relay box.
3. Do the gauge drive circuit check (see page 22-396).

   - If the fuel gauge needle sweeps from the minimum to maximum position and then returns to minimum, the gauge is OK. Go to step 4.
   - If the fuel gauge needle does not sweep correctly, replace the gauge control module and retest.

4. Turn the ignition switch to LOCK (0).
5. Remove the rear seat cushion (see page 20-140).
6. Remove the access panel (A) from the left side of the floor.

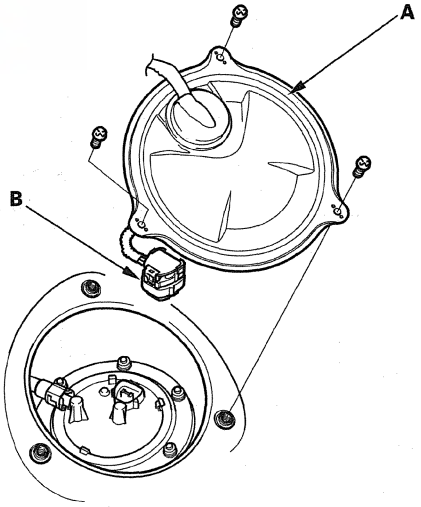

7. Disconnect the fuel pump 5P connector (B).

(cont'd)

Fuel Gauge Sending Unit Test (cont'd)

8. Remove the fuel tank unit from the fuel tank (see page 11-347).

9. Measure the resistance between the No. 1 and No. 2 terminals of the fuel pump 5P connector with the float at E (EMPTY), LOW (LOW FUEL INDICATOR), and F (FULL) positions.

   - If you do not get the following readings, replace the fuel gauge sending unit (see page 11-349).
   - If the fuel gauge sending unit test is OK, do the secondary fuel gauge sending unit test (see page 11-354).

Float Position	F 1.1 in (28.9 mm)	LOW 4.7 in (118.1 mm)	E 5.7 in (144.7 mm)
Resistance (Ω)	9 to 11	217.3 to 243.1	284.1 to 294.1

NOTE: Remove the No. 15 BACK UP (40 A) fuse from the under-hood fuse/relay box for at least 30 seconds after completing troubleshooting, otherwise it may take up to 20 minutes for the fuel gauge to indicate the correct fuel level.

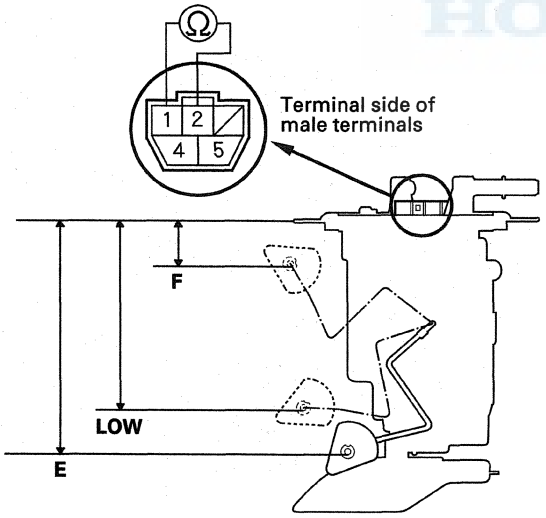

Secondary Fuel Gauge Sending Unit Test

1. Remove the rear seat cushion (see page 20-140).

2. Remove the access panel (A) from the right side of the floor.

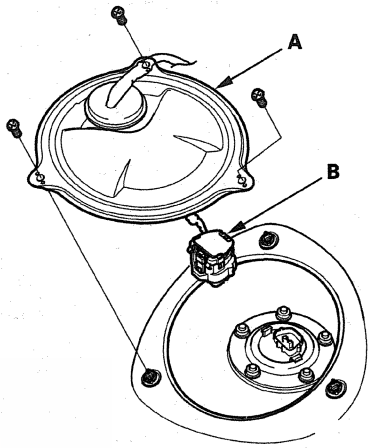

3. Disconnect the secondary fuel gauge sending unit 5P connector (B).

4. Remove the secondary fuel gauge sending unit from the fuel tank (see page 11-350).

5. Measure the resistance between the No. 1 and No. 2 terminals of the fuel pump 5P connector with the float at E (EMPTY), 1/2 (HALF FULL), and F (FULL) positions.

Float Position	F 0.7 in (17.4 mm)	1/2 6.8 in (171.6 mm)	E 7.7 in (195.2 mm)
Resistance (Ω)	9 to 11	445.0 to 455.0	485.9 to 495.9

NOTE: Remove the No. 15 BACK UP (40 A) fuse from the under-hood fuse/relay box for at least 10 seconds after completing troubleshooting, otherwise it may take up to 20 minutes for the fuel gauge to indicate the correct fuel level.

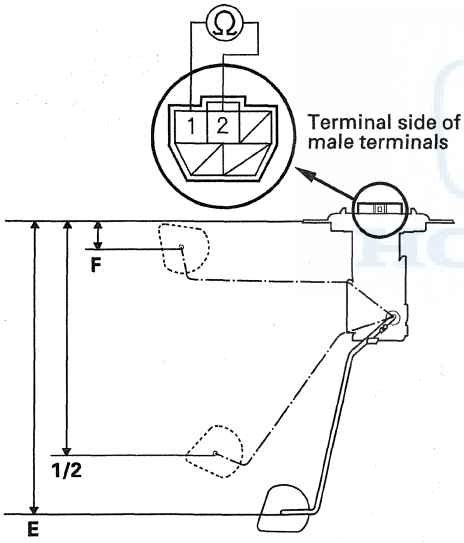

Low Fuel Indicator Test

1. Do the gauge self-diagnostic function (see page 22-396).

   - If the low fuel indicator flashes, go to step 2.
   - If the low fuel indicator does not flash, replace the gauge control module assembly.

2. Check for body electrical system DTCs.

   - If any DTCs are indicated, go to the indicated DTC's troubleshooting.
   - If no DTCs are indicated, go to step 3.

3. Do the fuel gauge sending unit test (see page 11-353), and secondary fuel gauge sending unit test (see page 11-354).

Component Location Index

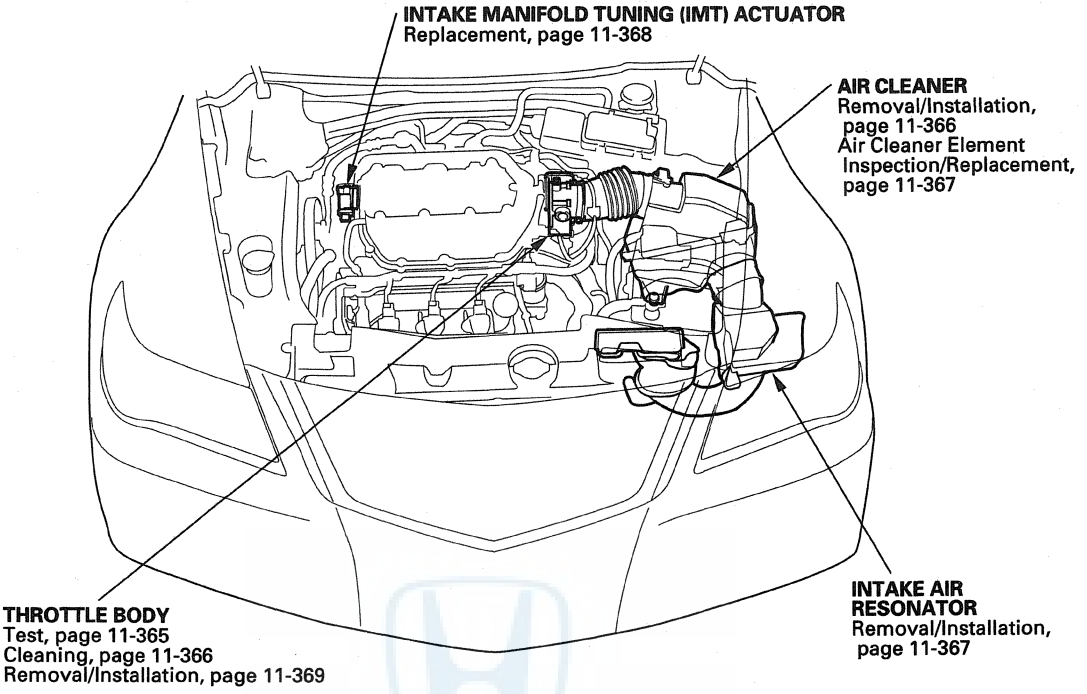

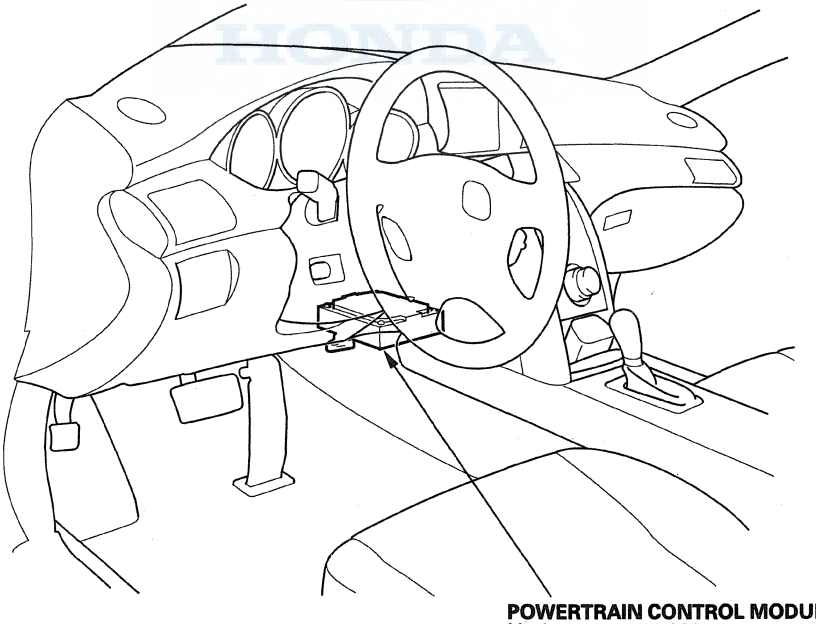

DTC Troubleshooting

DTC P1077: IMT Valve Stuck in High RPM Position

NOTE: Before you troubleshoot, record all freeze data and any on-board snapshot, and review the general troubleshooting information (see page 11-3).

1. Turn the ignition switch to ON (II).
2. Clear the DTC with the HDS.
3. Start the engine, and let it idle.
4. Make sure the IMT VALVE CMD is CLOSED in the DATA LIST with the HDS.

   Is CLOSED indicated?

   YES—Go to step 5.

   NO—Go to step 29.
5. Check the IMT VALVE SW in the DATA LIST with the HDS.

   Is OPEN indicated?

   YES—Go to step 6.

   NO—Intermittent failure, the system is OK at this time. Check for poor connections or loose terminals at the IMT actuator and the PCM. ■
6. Turn the ignition switch to LOCK (0).
7. Disconnect the IMT actuator 5P connector.
8. Turn the ignition switch to ON (II).
9. Check the IMT VALVE SW in the DATA LIST with the HDS.

   Is CLOSED indicated?

   YES—Go to step 14.

   NO—Go to step 10.
10. Turn the ignition switch to LOCK (0).
11. Jump the SCS line with the HDS.
12. Disconnect PCM connector B (24P).
13. Check for continuity between PCM connector terminal B11 and body ground.

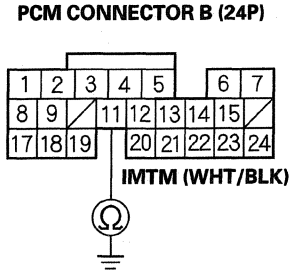

Wire side of female terminals

Is there continuity?

YES—Repair short in the wire between the PCM (B11) and the IMT actuator, then go to step 25.

NO—Go to step 31.

14. Turn the ignition switch to LOCK (0).
15. Jump the SCS line with the HDS.
16. Disconnect PCM connector B (24P).
17. Check for continuity between PCM connector terminal B4 and body ground.

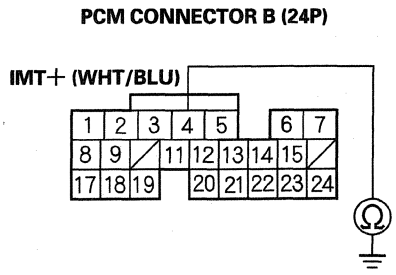

Wire side of female terminals

Is there continuity?

YES—Repair short in the wire between the PCM (B4) and the IMT actuator, then go to step 25.

NO—Go to step 18.

(cont'd)

DTC Troubleshooting (cont'd)

18. Connect IMT actuator 5P connector terminal No. 5 to body ground with a jumper wire.

IMT ACTUATOR 5P CONNECTOR

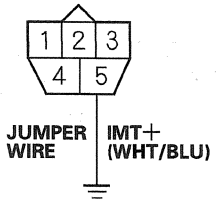

Wire side of female terminals

19. Check for continuity between PCM connector terminal B4 and body ground.

PCM CONNECTOR B (24P)

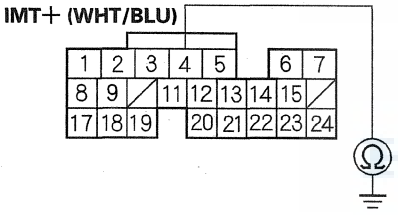

Wire side of female terminals

Is there continuity?

YES—Go to step 20.

NO—Repair open in the wire between the PCM (B4) and the IMT actuator, then go to step 25.

20. Check for continuity between PCM connector terminal B3 and body ground.

PCM CONNECTOR B (24P)

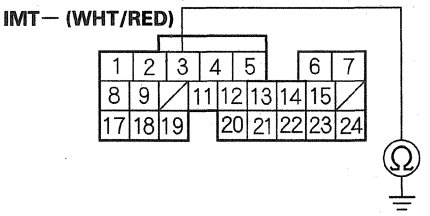

Wire side of female terminals

Is there continuity?

YES—Repair short in the wire between the PCM (B3) and the IMT actuator, then go to step 25.

NO—Go to step 21.

21. Connect IMT actuator 5P connector terminal No. 4 to body ground with a jumper wire.

IMT ACTUATOR 5P CONNECTOR

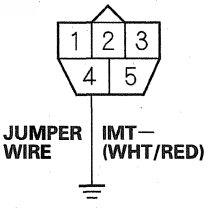

Wire side of female terminals

22. Check for continuity between PCM connector terminal B3 and body ground.

PCM CONNECTOR B (24P)

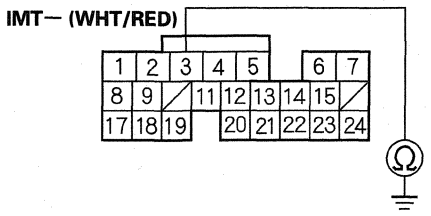

Wire side of female terminals

Is there continuity?

YES—Go to step 23.

NO—Repair open in the wire between the PCM (B3) and the IMT actuator, then go to step 25.

23. Remove the IMT actuator (see page 11-368).

24. Move the IMT valve by hand.

Does it move smoothly?

YES—Substitute a known-good IMT actuator (see page 11-368), then go to step 25 and recheck. If DTC P1077 is not indicated, replace the IMT actuator (see page 11-368), then go to step 25. If DTC P1077 is indicated, go to step 33.

NO—Remove the engine cover (see step 2 on page 9-3), and repair the stuck valve. If needed, replace the intake manifold (see page 9-2), then go to step 25.

25. Reconnect all connectors.

26. Turn the ignition switch to ON (II).

27. Reset the PCM with the HDS.

28. Do the PCM idle learn procedure (see page 11-313).

29. Check for Pending or Confirmed DTCs with the HDS.

Is DTC P1077 indicated?

YES—Check for poor connections or loose terminals at the IMT actuator and the PCM. If the PCM was updated, substitute a known-good PCM (see page 11-7), then recheck. If the PCM was substituted, go to step 1.

NO—Go to step 30.

30. Monitor the OBD STATUS for DTC P1077 in the DTCs MENU with the HDS.

Does the screen indicate PASSED?

YES—If the PCM was updated, troubleshooting is complete. If the PCM was substituted, replace the original PCM (see page 11-232). If any other Pending or Confirmed DTCs were indicated in step 29, go to the indicated DTC's troubleshooting. ■

NO—If the screen indicates FAILED, check for poor connections or loose terminals at the IMT actuator and the PCM. If the PCM was updated, substitute a known-good PCM (see page 11-7), then recheck. If the PCM was substituted, go to step 1. If the screen indicates NOT COMPLETED, keep idling until a result comes on.

31. Turn the ignition switch to LOCK (0).

32. Reconnect all connectors.

33. Update the PCM if it does not have the latest software (see page 11-230), or substitute a known-good PCM (see page 11-7).

(cont'd)

DTC Troubleshooting (cont'd)

34. Check for Pending or Confirmed DTCs with the HDS.

    Is DTC P1077 indicated?

    YES—Check for poor connections or loose terminals at the IMT actuator and the PCM. If the PCM was updated, substitute a known-good PCM (see page 11-7), then recheck. If the PCM was substituted, go to step 1.

    NO—Go to step 35.

35. Monitor the OBD STATUS for DTC P1077 in the DTCs MENU with the HDS.

    Does the screen indicate PASSED?

    YES—If the PCM was updated, troubleshooting is complete. If the PCM was substituted, replace the original PCM (see page 11-232). If any other Pending or Confirmed DTCs were indicated in step 34, go to the indicated DTC's troubleshooting. ■

    NO—If the screen indicates FAILED, check for poor connections or loose terminals at the IMT actuator and the PCM. If the PCM was updated, substitute a known-good PCM (see page 11-7), then recheck. If the PCM was substituted, go to step 1. If the screen indicates NOT COMPLETED, keep idling until a result comes on.

DTC P1078: IMT Valve Stuck in Low RPM Position

NOTE: Before you troubleshoot, record all freeze data and any on-board snapshot, and review the general troubleshooting information (see page 11-3).

1. Turn the ignition switch to ON (II).
2. Clear the DTC with the HDS.
3. Start the engine. Hold the engine speed above 4,000 rpm.
4. Make sure the IMT VALVE CMD is OPEN in the DATA LIST with the HDS.
5. Check the IMT VALVE SW in the DATA LIST with the HDS.

   Is CLOSED indicated?

   YES—Go to step 6.

   NO—Intermittent failure, the system is OK at this time. Check for poor connections or loose terminals at the IMT actuator and the PCM. ■

6. Let the engine idle, then turn the ignition switch to LOCK (0).
7. Disconnect the IMT actuator 5P connector.
8. Turn the ignition switch to ON (II).
9. Measure the voltage between IMT actuator 5P connector terminal No. 1 and body ground.

IMT ACTUATOR 5P CONNECTOR

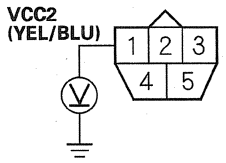

Wire side of female terminals

Is there about 5 V?

YES—Go to step 10.

NO—Repair open in the wire between the PCM (C14) and the IMT actuator, then go to step 27.

10. Measure the voltage between IMT actuator 5P connector terminal No. 3 and body ground.

IMT ACTUATOR 5P CONNECTOR

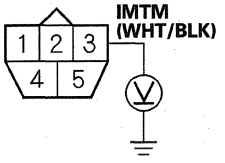

Wire side of female terminals

Is there about 5 V?

YES—Go to step 11.

NO—Go to step 16.

11. Turn the ignition switch to LOCK (0).
12. Jump the SCS line with the HDS.
13. Disconnect PCM connector C (22P).
14. Connect IMT actuator 5P connector terminal No. 2 to body ground with a jumper wire.

IMT ACTUATOR 5P CONNECTOR

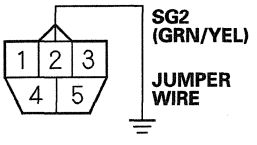

Wire side of female terminals

15. Check for continuity between PCM connector terminal C12 and body ground.

PCM CONNECTOR C (22P)

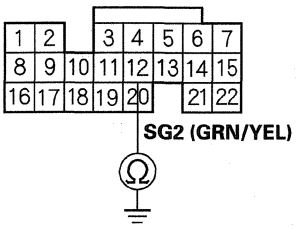

Wire side of female terminals

Is there continuity?

YES—Go to step 21.

NO—Repair open in the wire between the PCM (C12) and the IMT actuator, then go to step 29.

16. Turn the ignition switch to LOCK (0).
17. Jump the SCS line with the HDS.
18. Disconnect PCM connector B (24P).
19. Connect IMT actuator 5P connector terminal No. 3 to body ground with a jumper wire.

IMT ACTUATOR 5P CONNECTOR

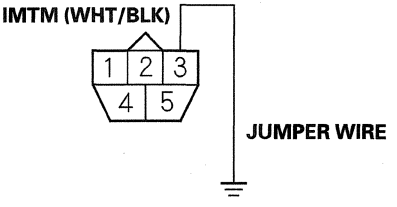

Wire side of female terminals

(cont'd)

DTC Troubleshooting (cont'd)

20. Check for continuity between PCM connector terminal B11 and body ground.

PCM CONNECTOR B (24P)

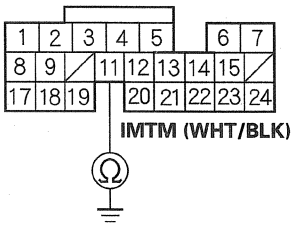

Wire side of female terminals

Is there continuity?

YES—Go to step 36.

NO—Repair open in the wire between the PCM (B11) and the IMT actuator, then go to step 27.

21. Check for continuity between PCM connector terminal B4 and body ground.

PCM CONNECTOR B (24P)

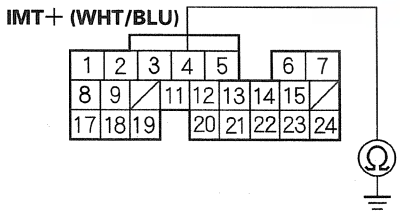

Wire side of female terminals

Is there continuity?

YES—Repair short in the wire between the PCM (B4) and the IMT actuator, then go to step 29.

NO—Go to step 22.

22. Connect IMT actuator 5P connector terminal No. 5 to body ground with a jumper wire.

IMT ACTUATOR 5P CONNECTOR

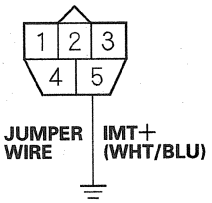

Wire side of female terminals

23. Check for continuity between PCM connector terminal B4 and body ground.

PCM CONNECTOR B (24P)

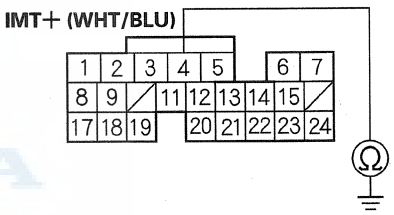

Wire side of female terminals

Is there continuity?

YES—Go to step 24.

NO—Repair open in the wire between the PCM (B4) and the IMT actuator, then go to step 29.

24. Check for continuity between PCM connector terminal B3 and body ground.

PCM CONNECTOR B (24P)

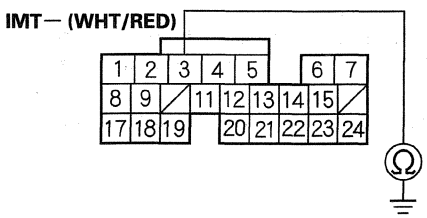

Wire side of female terminals

Is there continuity?

YES—Repair short in the wire between the PCM (B3) and the IMT actuator, then go to step 29.

NO—Go to step 25.

25. Connect IMT actuator 5P connector terminal No. 4 to body ground with a jumper wire.

IMT ACTUATOR 5P CONNECTOR

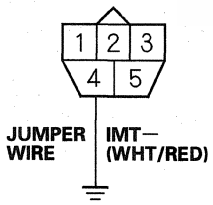

Wire side of female terminals

26. Check for continuity between PCM connector terminal B3 and body ground.

PCM CONNECTOR B (24P)

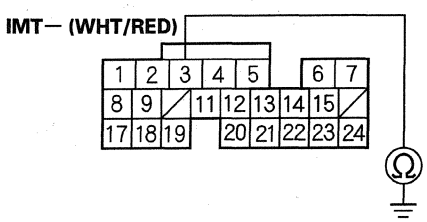

Wire side of female terminals

Is there continuity?

YES—Go to step 27.

NO—Repair open in the wire between the PCM (B3) and the IMT actuator, go to step 29.

27. Remove the IMT actuator (see page 11-368).

28. Move the IMT valve by hand.

Does it move smoothly?

YES—Substitute a known-good IMT actuator (see page 11-368), then go to step 29 and recheck. If DTC P1078 is not indicated, replace the IMT actuator (see page 11-368), then go to step 29. If DTC P1078 is indicated, go to step 37.

NO—Remove the engine cover (see step 2 on page 9-3), and repair the stuck valve. If needed, replace the intake manifold (see page 9-2), then go to step 29.

29. Reconnect all connectors.

30. Turn the ignition switch to ON (II).

31. Reset the PCM with the HDS.

(cont'd)

DTC Troubleshooting (cont'd)

32. Do the PCM idle learn procedure (see page 11-313).

33. Start the engine. Hold the engine speed at 4,000 rpm for 10 seconds, then let it idle.

34. Check for Pending or Confirmed DTCs with the HDS.

    Is DTC P1078 indicated?

    YES—Check for poor connections or loose terminals at the IMT actuator and the PCM, then go to step 1.

    NO—Go to step 35.

35. Monitor the OBD STATUS for DTC P1078 in the DTCs MENU with the HDS.

    Does the screen indicate PASSED?

    YES—Troubleshooting is complete. If any other Pending or Confirmed DTCs were indicated in step 34, go to the indicated DTC's troubleshooting. ■

    NO—If the screen indicates FAILED, check for poor connections or loose terminals at the IMT actuator and the PCM, then go to step 1. If the screen indicates NOT COMPLETED, keep idling until a result comes on.

36. Reconnect all connectors.

37. Update the PCM if it does not have the latest software (see page 11-230), or substitute a known-good PCM (see page 11-7).

38. Start the engine, and hold the engine speed at 4,000 rpm for 10 seconds, then let it idle.

39. Check for Pending or Confirmed DTCs with the HDS.

    Is DTC P1078 indicated?

    YES—Check for poor connections or loose terminals at the IMT actuator and the PCM. If the PCM was updated, substitute a known-good PCM (see page 11-7), then go to step 38. If the PCM was substituted, go to step 1.

    NO—Go to step 40.

40. Monitor the OBD STATUS for DTC P1078 in the DTCs MENU with the HDS.

    Does the screen indicate PASSED?

    YES—If the PCM was updated, troubleshooting is complete. If the PCM was substituted, replace the original PCM (see page 11-232). If any other Pending or Confirmed DTCs were indicated in step 39, go to the indicated DTC's troubleshooting. ■

    NO—If the screen indicates FAILED, check for poor connections or loose terminals at the IMT actuator and the PCM. If the PCM was updated, substitute a known-good PCM (see page 11-7), then go to step 38. If the PCM was substituted, go to step 1. If the screen indicates NOT COMPLETED, go to step 38.

Throttle Body Test

Carbon Accumulation Check

NOTE: If the malfunction indicator lamp (MIL) has been reported on, check for diagnostic trouble codes (DTCs).

1. Connect the HDS to the data link connector (DLC) (A) located under the driver's side of the dashboard.

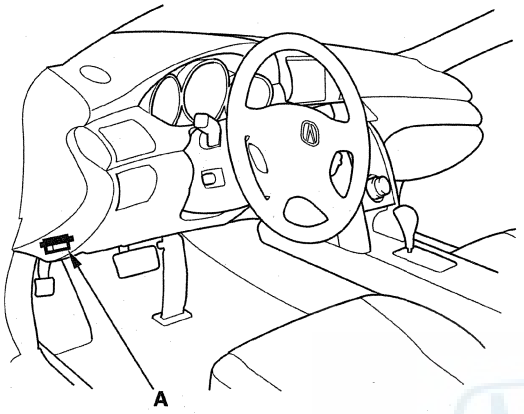

2. Turn the ignition switch to ON (II).
3. Make sure the HDS communicates with the PCM. If it does not, go to the DLC circuit troubleshooting (see page 11-211).
4. Start the engine. Hold the engine speed at 3,000 rpm without load (in P or N) until the radiator fan comes on, then let it idle.
5. Check the REL TP SENSOR in the DATA LIST with the HDS. The reading should be below 2.46 deg. If it is not, clean the throttle body (see page 11-366).

Throttle Position Learning Check

NOTE: If the malfunction indicator lamp (MIL) has been reported on, check for diagnostic trouble codes (DTCs).

1. Connect the HDS to the data link connector (DLC) (A) located under the driver's side of the dashboard.

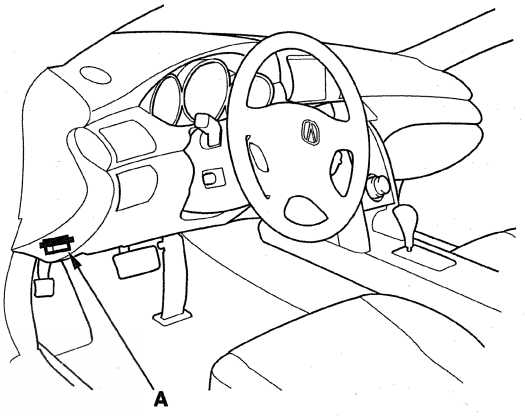

2. Turn the ignition switch to ON (II).
3. Make sure the HDS communicates with the PCM. If it does not, go to the DLC circuit troubleshooting (see page 11-211).
4. Select the INSPECTION MENU with the HDS.
5. Do the TP LEARNING CHECK in the ETCS TEST. If needed, clean the throttle body (see page 11-366).

Throttle Body Cleaning

⚠CAUTION

Do not insert your fingers into the installed throttle body when you turn the ignition switch to ON (II) or while the ignition switch is in ON (II). If you do, you will seriously injure your fingers if the throttle valve is activated.

1. Check for damage to the air cleaner element. If the air cleaner element is damaged, replace it (see page 11-367).
2. Remove the throttle body (see page 11-369).
3. Clean off the carbon from the throttle valve and inside the throttle body with a paper towel soaked in throttle plate cleaner.

   NOTE:
   - Remove the throttle body to clean it.
   - Be careful not to pinch your fingers.
   - To avoid removing the molybdenum coating, do not clean the bearing area of the throttle shaft (A).
   - Do not spray throttle plate cleaner directly on the throttle body.
   - Use Acura genuine throttle plate cleaner.

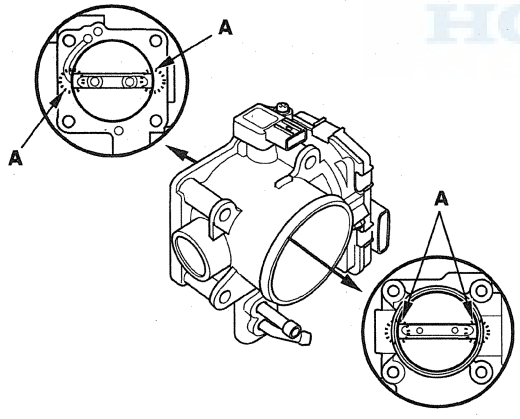

4. Install the throttle body (see page 11-369).
5. Reset the PCM with the HDS.
6. Turn the ignition switch to ON (II), and wait 2 seconds.
7. Do the PCM idle learn procedure (see page 11-313).

Air Cleaner Removal/Installation

1. Remove the battery trim (see step 2 on page 20-162), and the left upper fender trim (see step 3 on page 20-163).
2. Disconnect the MAF sensor/IAT sensor connector.
3. Remove the bolts (A) and the air cleaner (B).

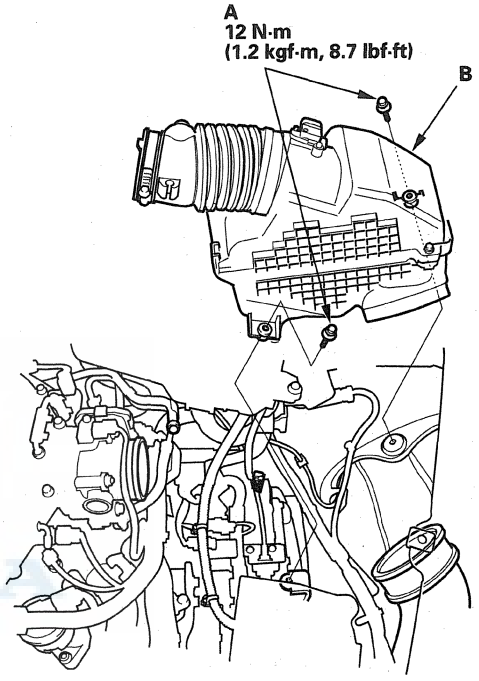

4. Install the parts in the reverse order of removal.

Air Cleaner Element Inspection/ Replacement

1. Remove the battery trim (see step 2 on page 20-162), and the left upper fender trim (see step 3 on page 20-163).
2. Open the air cleaner housing cover (A).

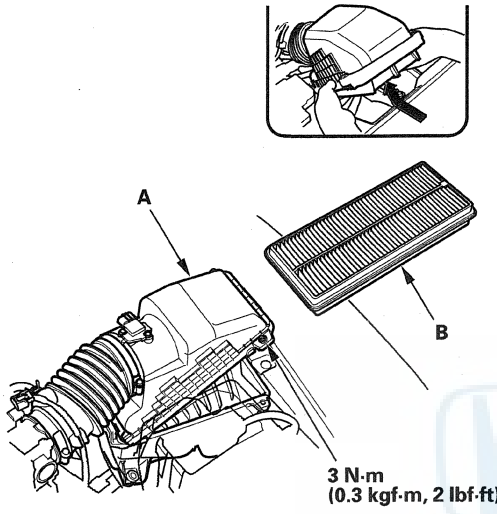

3. Remove the air cleaner element (B) from the air cleaner housing cover.
4. Check the air cleaner element for damage or clogging. If it is damage or clogged, replace it.

   NOTE: Do not use compressed air to clean the air cleaner element.

5. Clean and remove any debris from inside the air cleaner housing.
6. Install the parts in the reverse order of removal.

   - If you did not replace the air cleaner element, this procedure is complete.
   - If the maintenance minder required air cleaner element replacement, reset the maintenance minder (see page 3-4).
   - If you replaced the air cleaner element, reset the PCM (see page 11-4), and do the PCM idle learn procedure (see page 11-313).
   - If the idle speed fluctuates, do the idle speed insection (see page 11-312).

Intake Air Resonator Removal/ Installation

1. Remove the front bumper (see page 20-149).
2. Remove the air cleaner (see page 11-366).
3. Remove the intake air duct (A) and the tube (B).

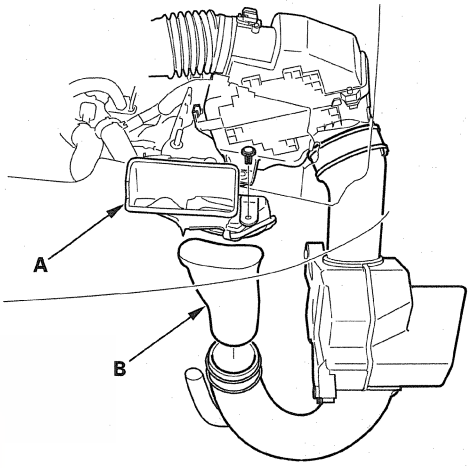

4. Remove the bolts and the intake air resonator (A).

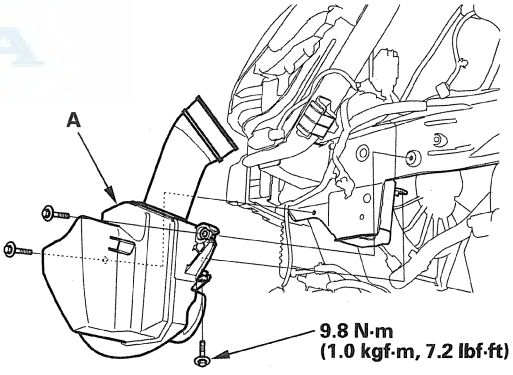

5. Install the parts in the reverse order of removal.

HONDA

IMT Actuator Replacement

1. Remove the engine cover (see step 2 on page 9-3).
2. Disconnect the IMT actuator 5P connector (A).

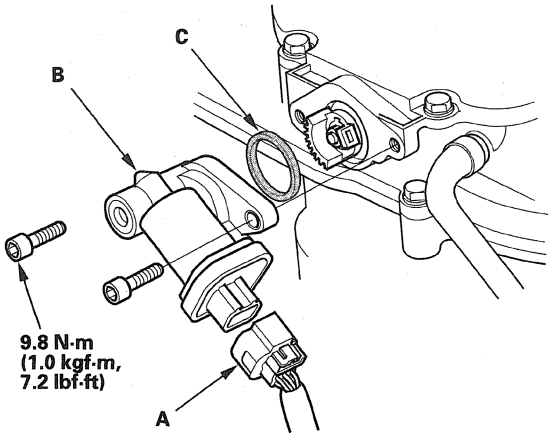

3. Remove the bolts and the IMT actuator (B).
4. Install the parts in the reverse order of removal with a new O-ring (C).

Throttle Body Removal/Installation

⚠CAUTION

Do not insert your fingers into the installed throttle body when you turn the ignition switch to ON (II) or while the ignition switch is ON (II). If you do, you will seriously injure your fingers if the throttle valve is activated.

NOTE: If you are replacing the throttle body, begin at step 1. If you are removing the throttle body temporarily, begin at step 4.

1. Connect the HDS while the engine is stopped.
2. Select the INSPECTION MENU with the HDS.
3. Do the TP POSITION CHECK in the ETCS TEST.
4. Turn the ignition switch to ON (II).
5. Disconnect the MAP sensor connector (A).

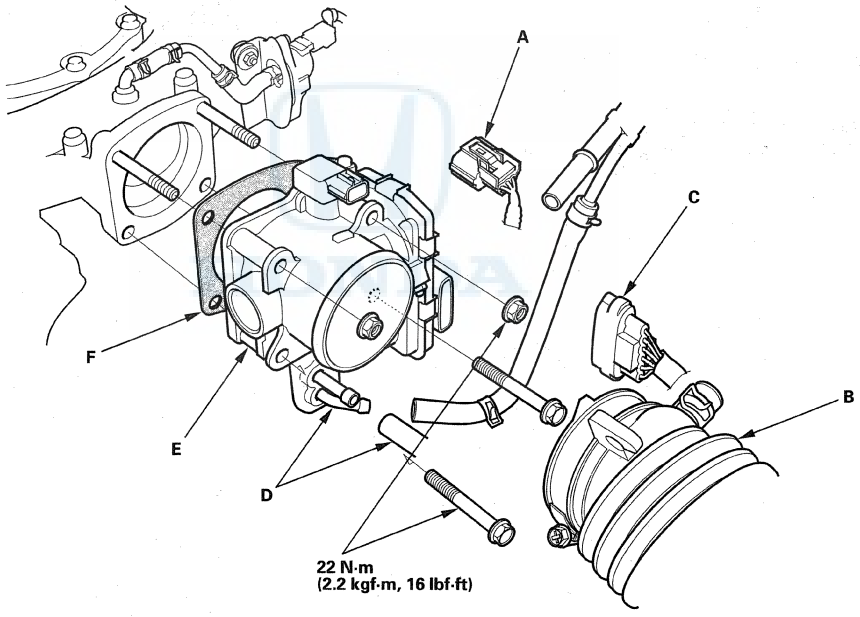

6. Remove the intake air duct (B).
7. Disconnect the throttle body connector (C).
8. Disconnect and plug the water bypass hoses (D).
9. Remove the throttle body (E).
10. Install the parts in the reverse order of removal with a new gasket (F), then do this:
    - Refill the radiator with engine coolant (see page 10-6).
    - Do the PCM idle learn procedure (see page 11-313).

Component Location Index

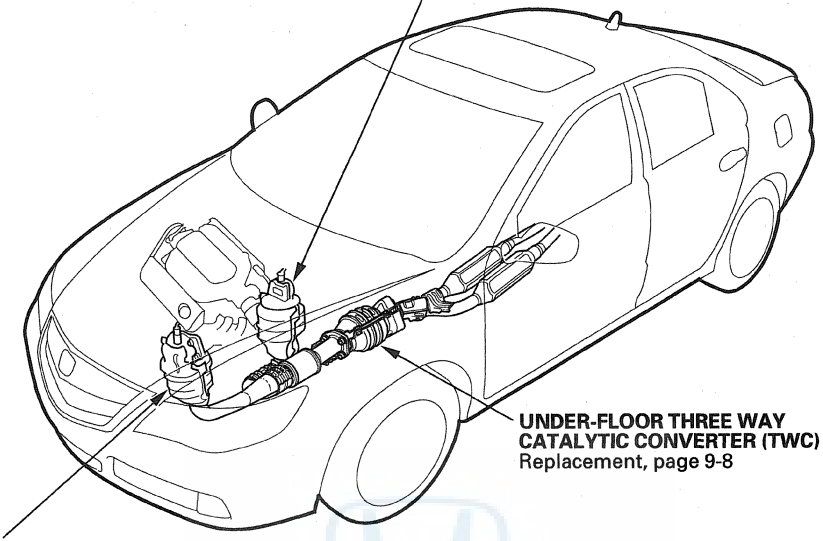

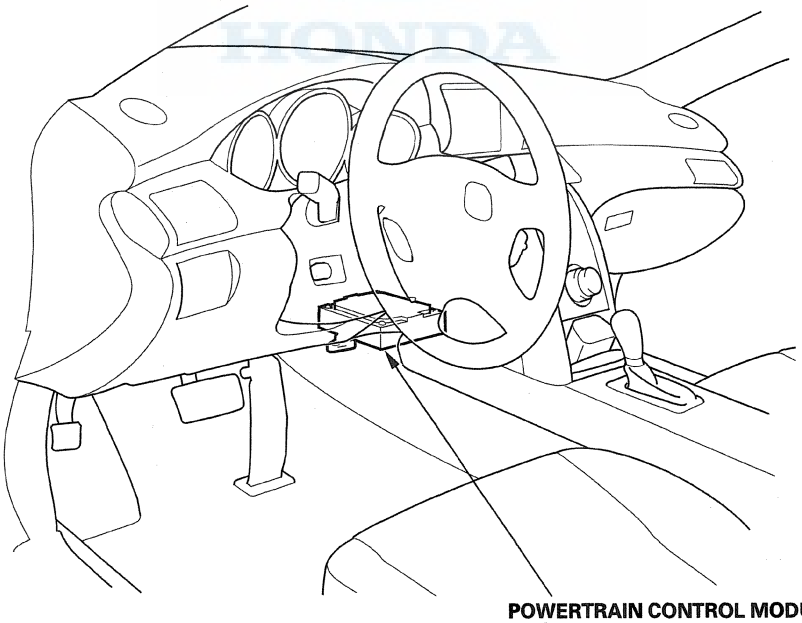

DTC Troubleshooting

DTC P0420: Rear Bank Catalyst System Efficiency Below Threshold (Bank 1)

DTC P0430: Front Bank Catalyst System Efficiency Below Threshold (Bank 2)

NOTE:
- Before you troubleshoot, record all freeze data and any on-board snapshot, and review the general troubleshooting information (see page 11-3). Also, make sure the PCM has the latest update (see page 11-230).
- If some of the DTCs listed below are stored at the same time as DTC P0420 and/or P0430*, troubleshoot those DTCs first, then recheck for DTC P0420 and/or P0430*.
  P0137, P0138, P0157, P0158: Secondary HO2S (Sensor 2)
  P0141, P0161*: Secondary HO2S (Sensor 2) heater
- Poor quality fuel can cause these DTCs.
- Information marked with an asterisk (*) applies to the front bank (Bank 2).

1. Turn the ignition switch to ON (II).
2. Clear the DTC with the HDS.
3. Start the engine. Hold the engine speed at 3,000 rpm without load (in P or N) until the radiator fan comes on, then let it idle.
4. Test-drive under these conditions:
   - Engine coolant temperature (ECT SENSOR 1) above 158 °F (70 °C)
   - Transmission in D
   - Vehicle speed between 45—75 mph (72—120 km/h) for 5 minutes or more with cruise control set
   - Vehicle speed between 55—75 mph (88—120 km/h) for 10 seconds, then decelerate (with throttle fully closed). Repeat this 3 times or more
   - Maintain the vehicle speed at 55 mph (88 km/h) for 5 minutes or more with cruise control set
5. Monitor the OBD STATUS for DTC P0420 and/or P0430* in the DTCs MENU with the HDS.

   Does the screen indicate EXECUTING?

   YES—Go to step 6.

   NO—If the screen indicates OUT OF CONDITION, go to step 4 and recheck. If the screen indicates PASSED, intermittent failure, the system is OK at this time. If the screen indicates FAILED, go to step 8 and recheck.
6. Continue test driving until a result comes on.
7. Monitor the OBD STATUS for DTC P0420 and/or P0430* in the DTCs MENU with the HDS.

   Does the screen indicate FAILED?

   YES—Go to step 8.

   NO—If the screen indicates PASSED, intermittent failure, the system is OK at this time. If the screen indicates EXECUTING, keep driving until a result comes on. If the screen indicates OUT OF CONDITION, go to step 4 and recheck.
8. Turn the ignition switch to LOCK (0).
9. Replace the WU-TWC:
   - For DTC P0420, replace the rear WU-TWC (Bank 1) (see page 11-374).
   - For DTC P0430, replace the front WU-TWC (Bank 2) (see page 11-373).
10. Turn the ignition switch to ON (II).
11. Reset the PCM with the HDS.
12. Do the PCM idle learn procedure (see page 11-313).

(cont'd)

DTC Troubleshooting (cont'd)

13. Start the engine. Hold the engine speed at 3,000 rpm without load (in P or N) until the radiator fan comes on, then let it idle.

14. Test-drive for about 10 minutes, continually changing the vehicle speed.

15. Check the CATA MONITOR CONDITION B1 (B2)* in the DATA LIST with the HDS.

    Is the condition OK?

    YES—Go to step 16.

    NO—Go to step 13 and recheck.

16. Test-drive under these conditions:

    - Engine coolant temperature (ECT SENSOR 1) above 158 °F (70 °C)
    - Transmission in D
    - Vehicle speed between 55—75 mph (88—120 km/h) for 10 seconds, then decelerate (with throttle fully closed). Repeat this 3 times or more
    - Maintain the vehicle speed at 55 mph (88 km/h) for 5 minutes or more with cruise control set

17. Continue test-driving until a result comes on.

18. Check for Pending or Confirmed DTCs with the HDS.

    Is DTC P0420 and/or P0430 indicated?*

    YES—Check the fuel quality, then go to step 1.

    NO—Go to step 19.

19. Monitor the OBD STATUS for DTC P0420 and/or P0430* in the DTCs MENU with the HDS.

    Does the screen indicate PASSED?

    YES—Troubleshooting is complete. If any other Pending or Confirmed DTCs were indicated in step 19, go to the indicated DTC's troubleshooting. ■

    NO—If the screen indicates FAILED, check the fuel quality, then go to step 1. If the screen indicates EXECUTING, keep driving until a result comes on. If the screen indicates OUT OF CONDITION, go to step 16.

Warm Up TWC Removal/Installation

FRONT

1. Remove the engine cover (see step 2 on page 9-3).
2. Remove the condenser fan shroud (see page 10-11).
3. Remove the No. 2 ignition coil and the ignition coil heat insulator.
4. Remove the front A/F sensor (Sensor 1) (see page 11-227) and the front secondary HO2S (Sensor 2) (see page 11-228).
5. Remove the exhaust pipe A mounting nuts (front WU-TWC side) (see page 9-8).
6. Remove the EGR pipe (see page 11-388).
7. Remove the front WU-TWC bracket, then carefully remove the front WU-TWC.

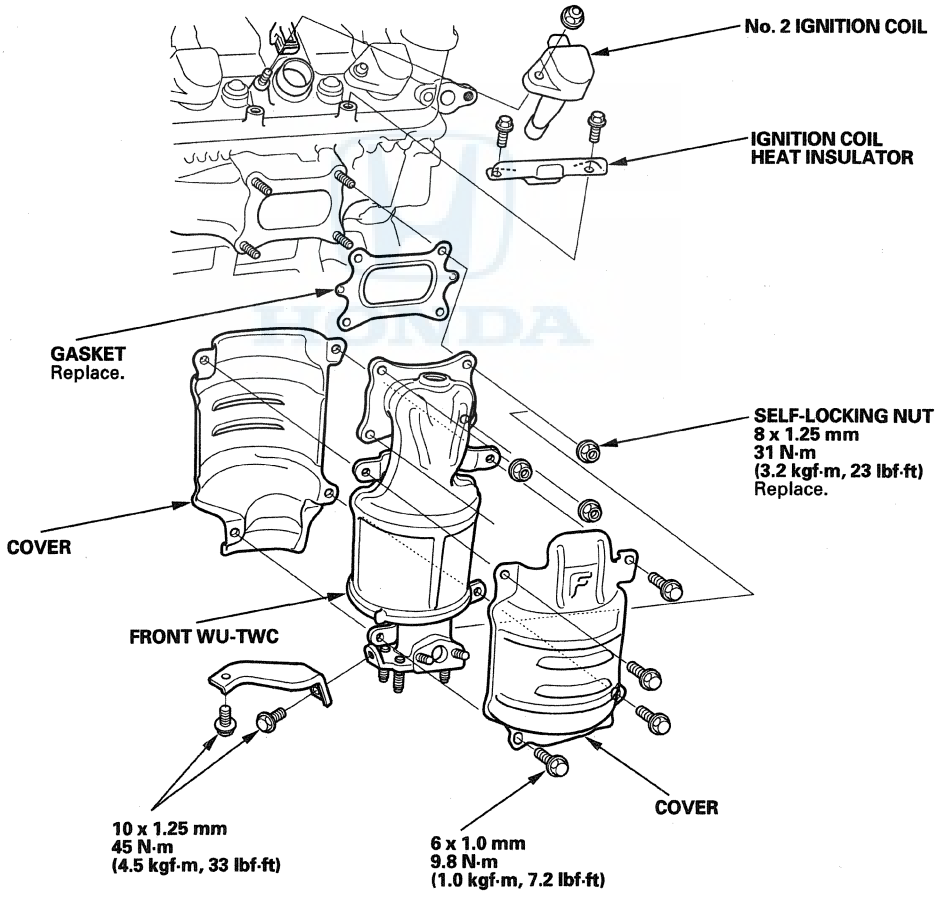

8. Carefully install the front WU-TWC with a new gasket and new self-locking nuts. Tighten the nuts in a crisscross pattern in two or three steps.
9. Install the parts in the reverse order of removal.

(cont'd)

Warm Up TWC Removal/Installation (cont'd)

REAR

1. Raise the vehicle on a lift.
2. Remove the intermediate shaft (see page 16-22).
3. Remove the rear A/F sensor (Sensor 1) (see page 11-227) and the rear secondary HO2S (Sensor 2) (see page 11-228).
4. Remove the exhaust pipe A mounting nuts (rear WU-TWC side) (see page 9-8).
5. Carefully remove the rear WU-TWC.

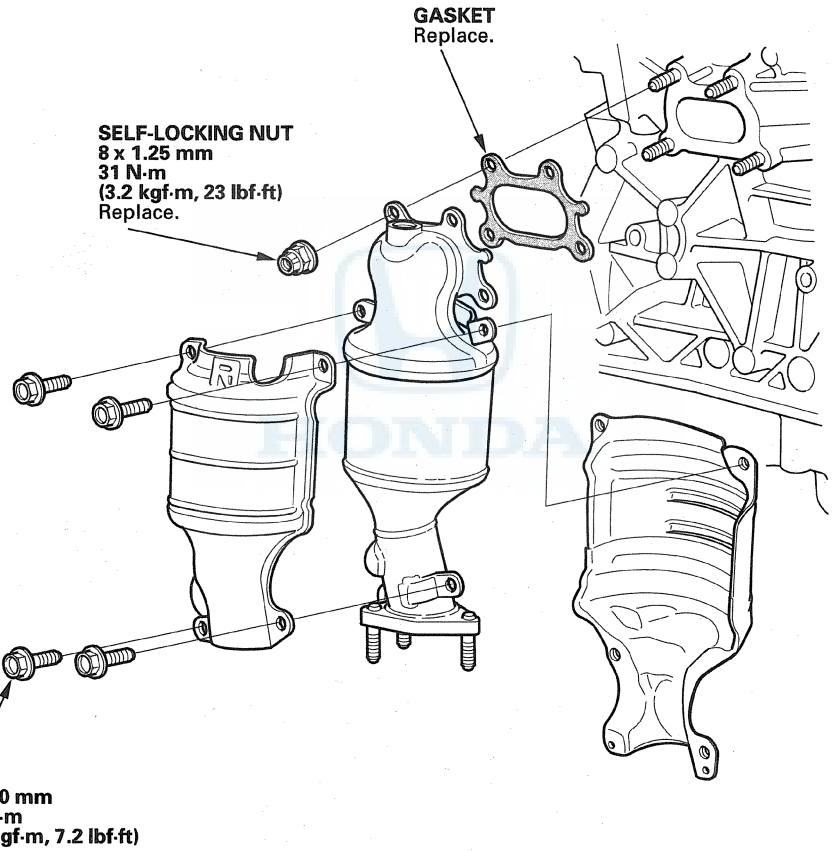

6. Carefully install the rear WU-TWC with a new gasket and new self-locking nuts. Tighten the nuts in a crisscross pattern in two or three steps.
7. Install the parts in the reverse order of removal.

Component Location Index

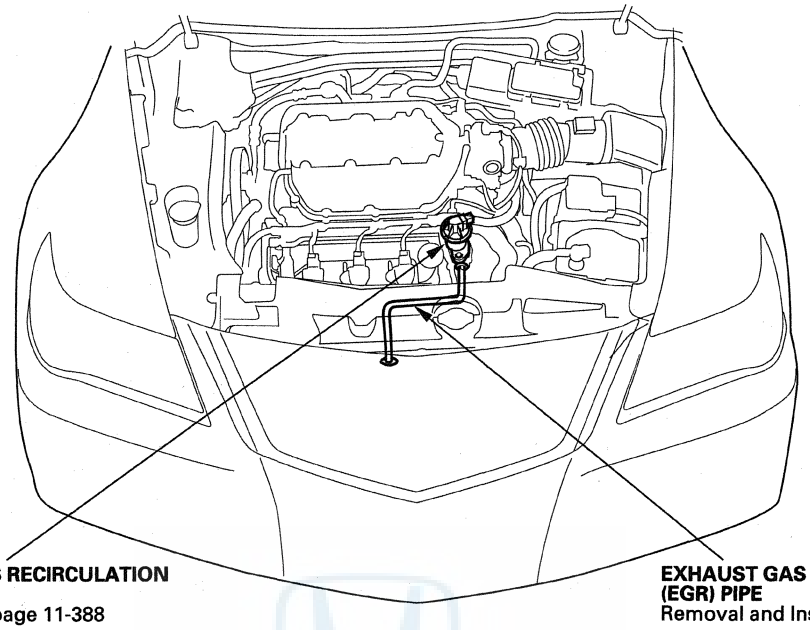

EXHAUST GAS RECIRCULATION (EGR) VALVE
Replacement, page 11-388

EXHAUST GAS RECIRCULATION (EGR) PIPE
Removal and Installation, page 11-388

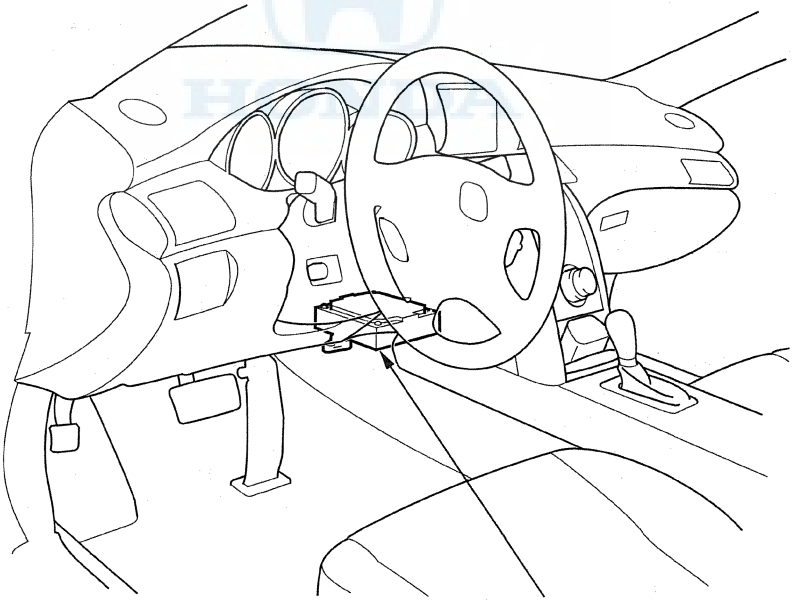

POWERTRAIN CONTROL MODULE (PCM)
Update, page 11-230
Substitution, page 11-7
Replacement, page 11-232

DTC Troubleshooting

DTC P0400: EGR System Leak Detected

NOTE: Before you troubleshoot, record all freeze data and any on-board snapshot, and review the general troubleshooting information (see page 11-3).

1. Check for a loose or damaged EGR pipe.

   Is the EGR pipe OK?

   YES—Go to step 2.

   NO—Reconnect or replace the EGR pipe, then go to step 7.

2. Start the engine. Hold the engine speed at 3,000 rpm without load (in P or N) until the radiator fan comes on, then let it idle.

3. Test-drive under these conditions:

   - Engine coolant temperature (ECT SENSOR 1) above 158 °F (70 °C)
   - Transmission in D
   - Vehicle speed at 25 mph (40 km/h) or less for 5 minutes or more
   - Maintain the vehicle speed at 32 mph (50 km/h) and engine speed between 1,500—3,000 rpm for 1 minute or more

4. Monitor the OBD STATUS for DTC P0400 in the DTCs MENU with the HDS.

   Does the screen indicate FAILED?

   YES—Go to step 5.

   NO—If the screen indicates PASSED, intermittent failure, the system is OK at this time. Check for exhaust gas leakage between the EGR pipe and the EGR valve. If the screen indicates NOT COMPLETED, go to step 3 and recheck.

5. Turn the ignition switch to LOCK (0).

6. Replace the EGR valve (see page 11-388).

7. Turn the ignition switch to ON (II).

8. Reset the PCM with the HDS.

9. Do the PCM idle learn procedure (see page 11-313).

10. Test-drive under these conditions:

    - Engine coolant temperature (ECT SENSOR 1) above 158 °F (70 °C)
    - Transmission in D
    - Vehicle speed at 25 mph (40 km/h) or less for 5 minutes or more
    - Maintain the vehicle speed at 32 mph (50 km/h) and engine speed between 1,500—3,000 rpm for 1 minute or more

11. Check for Pending or Confirmed DTCs with the HDS.

    Is DTC P0400 indicated?

    YES—Check for exhaust gas leakage between the EGR pipe and the EGR valve, then go to step 1.

    NO—Go to step 12.

12. Monitor the OBD STATUS for DTC P0400 in the DTCs MENU with the HDS.

    Does the screen indicate PASSED?

    YES—Troubleshooting is complete. If any other Pending or Confirmed DTCs were indicated in step 11, go to the indicated DTC's troubleshooting. ■

    NO—If the screen indicates FAILED, check for exhaust gas leakage between the EGR pipe and the EGR valve, then go to step 1. If the screen indicates NOT COMPLETED, go to step 10.

DTC P0401: EGR Insufficient Flow

NOTE: Before you troubleshoot, record all freeze data and any on-board snapshot, and review the general troubleshooting information (see page 11-3).

1. Turn the ignition switch to ON (II).
2. Clear the DTC with the HDS.
3. Start the engine. Hold the engine speed at 3,000 rpm without load (in P or N) until the radiator fan comes on, then let it idle.
4. Do the EGR TEST in the INSPECTION MENU with the HDS.

   Is the result OK?

   YES—Go to step 5.

   NO—Go to step 7.
5. Test-drive under these conditions:

   - Engine coolant temperature (ECT SENSOR 1) above 158 °F (70 °C)
   - Transmission in D
   - Drive at a steady speed between 55—75 mph (88—120 km/h) for at least 10 seconds
   - During the drive, decelerate (with the throttle fully closed) for 5 seconds
6. Monitor the OBD STATUS for DTC P0401 in the DTCs MENU with the HDS.

   Does the screen indicate FAILED?

   YES—Clean the intake manifold EGR port and the EGR pipe (see page 11-388) with throttle plate cleaner. Also, clean the passage inside the EGR valve with throttle plate cleaner, then go to step 9.

   NO—If the screen indicates PASSED, intermittent failure, the system is OK at this time. Check for poor connections or loose terminals at the EGR valve and the PCM. If the screen indicates EXECUTING, keep driving until a result comes on. If the screen indicates OUT OF CONDITION, go to step 5 and recheck.
7. Turn the ignition switch to LOCK (0).
8. Replace the EGR valve (see page 11-388).
9. Turn the ignition switch to ON (II).
10. Reset the PCM with the HDS.
11. Do the PCM idle learn procedure (see page 11-313).
12. Test-drive under these conditions:

    - Engine coolant temperature (ECT SENSOR 1) above 158 °F (70 °C)
    - Transmission in D
    - Drive at a steady speed between 55—75 mph (88—120 km/h) for at least 10 seconds
    - During the drive, decelerate (with the throttle fully closed) for 5 seconds
13. Check for Pending or Confirmed DTCs with the HDS.

    Is DTC P0401 indicated?

    YES—Check for poor connections or loose terminals at the EGR valve and the PCM. If the connections and the terminals are OK, go to step 15.

    NO—Go to step 14.
14. Monitor the OBD STATUS for DTC P0401 in the DTCs MENU with the HDS.

    Does the screen indicate PASSED?

    YES—Troubleshooting is complete. If any other Pending or Confirmed DTCs were indicated in step 13, go to the indicated DTC's troubleshooting. ■

    NO—If the screen indicates FAILED, check for poor connections or loose terminals at the EGR valve and the PCM, then go to step 1. If the screen indicates EXECUTING, keep driving until a result comes on. If the screen indicates OUT OF CONDITION, go to step 12.

(cont'd)

DTC Troubleshooting (cont'd)

15. Update the PCM if it does not have the latest software (see page 11-230), or substitute a known-good PCM (see page 11-7).

16. Test-drive under these conditions:

    - Engine coolant temperature (ECT SENSOR 1) above 158 °F (70 °C)
    - Transmission in D
    - Drive at a steady speed between 55—75 mph (88—120 km/h) for at least 10 seconds
    - During the drive, decelerate (with the throttle fully closed) for 5 seconds

17. Check for Pending or Confirmed DTCs with the HDS.

    Is DTC P0401 indicated?

    YES—Check for poor connections or loose terminals at the EGR valve and the PCM. If the PCM was updated, substitute a known-good PCM (see page 11-7), then go to step 16. If the PCM was substituted, go to step 1.

    NO—Go to step 18.

18. Monitor the OBD STATUS for DTC P0401 in the DTCs MENU with the HDS.

    Does the screen indicate PASSED?

    YES—If the PCM was updated, troubleshooting is complete. If the PCM was substituted, replace the original PCM (see page 11-232). If any other Pending or Confirmed DTCs were indicated in step 17, go to the indicated DTC's troubleshooting. ■

    NO—If the screen indicates FAILED, check for poor connections or loose terminals at the EGR valve and the PCM. If the PCM was updated, substitute a known-good PCM (see page 11-7), then go to step 16. If the PCM was substituted, go to step 1. If the screen indicates NOT COMPLETED, go to step 16.

DTC P0404: EGR Valve Circuit Range/ Performance Problem

NOTE: Before you troubleshoot, record all freeze data and any on-board snapshot, and review the general troubleshooting information (see page 11-3).

1. Turn the ignition switch to ON (II).

2. Clear the DTC with the HDS.

3. Start the engine. Hold the engine speed at 3,000 rpm without load (in P or N) until the radiator fan comes on, then let it idle.

4. Do the EGR TEST in the INSPECTION MENU with the HDS.

   Is the result OK?

   YES—Intermittent failure, the system is OK at this time. Clean any carbon build-up on the EGR valve with Acura genuine throttle plate cleaner. ■

   NO—Go to step 5.

5. Turn the ignition switch to LOCK (0).

6. Disconnect the EGR valve 5P connector.

7. At the EGR valve side, measure the resistance between EGR valve 5P connector terminals No. 2 and No. 3.

EGR VALVE 5P CONNECTOR

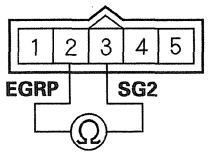

Terminal side of male terminals

Is there 100 kΩ or more?

YES—Go to step 25.

NO—Go to step 8.

8. At the EGR valve side, measure the resistance between EGR valve 5P connector terminals No. 2 and No. 4.

EGR VALVE 5P CONNECTOR

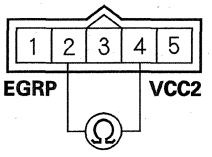

Terminal side of male terminals

Is there 100 kΩ or more?

YES—Go to step 25.

NO—Go to step 9.

9. Check for continuity between EGR valve 5P connector terminal No. 5 and body ground.

EGR VALVE 5P CONNECTOR

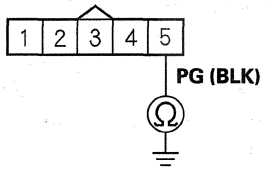

Wire side of female terminals

Is there continuity?

YES—Go to step 10.

NO—Repair open in the wire between the EGR valve and G101, then go to step 26.

10. Jump the SCS line with the HDS.

11. Disconnect PCM connector B (24P).

12. Check for continuity between PCM connector terminal B5 and body ground.

PCM CONNECTOR B (24P)

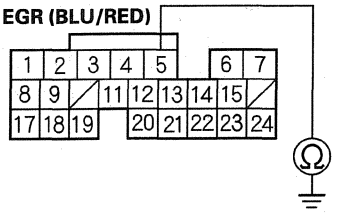

Wire side of female terminals

Is there continuity?

YES—Repair short in the wire between the PCM (B5) and the EGR valve, then go to step 27.

NO—Go to step 13.

13. Connect EGR valve 5P connector terminal No. 1 to body ground with a jumper wire.

EGR VALVE 5P CONNECTOR

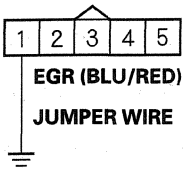

Wire side of female terminals

(cont'd)

DTC Troubleshooting (cont'd)

14. Check for continuity between PCM connector terminal B5 and body ground.

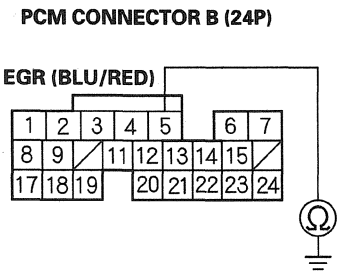

Wire side of female terminals

Is there continuity?

YES—Go to step 15.

NO—Repair open in the wire between the PCM (B5) and the EGR valve, then go to step 27.

15. Remove the EGR valve (see page 11-388).
16. Clean any carbon build-up on the EGR valve with Acura genuine throttle plate cleaner.
17. Install the EGR valve (see page 11-388).
18. Reconnect the EGR valve 5P connector.
19. Reconnect PCM connector B (24P).
20. Turn the ignition switch to ON (II).
21. Reset the PCM with the HDS.
22. Do the PCM idle learn procedure (see page 11-313).
23. Start the engine. Hold the engine speed at 3,000 rpm without load (in P or N) until the radiator fan comes on, then let it idle.
24. Do the EGR TEST in the INSPECTION MENU with the HDS.

Is the result OK?

YES—Go to step 33.

NO—Go to step 25.

25. Turn the ignition switch to LOCK (0).
26. Replace the EGR valve (see page 11-388).
27. Reconnect all connectors.
28. Turn the ignition switch to ON (II).
29. Reset the PCM with the HDS.
30. Do the PCM idle learn procedure (see page 11-313).
31. Start the engine. Hold the engine speed at 3,000 rpm without load (in P or N) until the radiator fan comes on, then let it idle.
32. Do the EGR TEST in the INSPECTION MENU with the HDS.
33. Check for Pending or Confirmed DTCs with the HDS.

Is DTC P0404 indicated?

YES—Check for poor connections or loose terminals at the EGR valve and the PCM, then go to step 1. If the connections and terminals are OK, go to step 34.

NO—Troubleshooting is complete. If any other Pending or Confirmed DTCs are indicated, go to the indicated DTC's troubleshooting. ■

34. Update the PCM if it does not have the latest software (see page 11-230), or substitute a known-good PCM (see page 11-7).
35. Start the engine. Hold the engine speed at 3,000 rpm without load (in P or N) until the radiator fan comes on, then let it idle.

36. Do the EGR TEST in the INSPECTION MENU with the HDS.

37. Check for Pending or Confirmed DTCs with the HDS.

    Is DTC P0404 indicated?

    YES—Check for poor connections or loose terminals at the EGR valve and the PCM. If the PCM was updated, substitute a known-good PCM (see page 11-7), then go to step 35. If the PCM was substituted, go to step 1.

    NO—If the PCM was updated, troubleshooting is complete. If the PCM was substituted, replace the original PCM (see page 11-232). If any other Pending or Confirmed DTCs are indicated, go to the indicated DTC's troubleshooting. ■

DTC P0406: EGR Valve Position Sensor Circuit High Voltage

NOTE: Before you troubleshoot, record all freeze data and any on-board snapshot, and review the general troubleshooting information (see page 11-3).

1. Turn the ignition switch to ON (II).

2. Check the EGR VLS in the DATA LIST with the HDS.

   Is 4.88 V or more indicated?

   YES—Go to step 3.

   NO—Intermittent failure, the system is OK at this time. Check for poor connections or loose terminals at the EGR valve and the PCM. ■

3. Turn the ignition switch to LOCK (0).

4. Disconnect the EGR valve 5P connector.

5. Turn the ignition switch to ON (II).

6. Measure the voltage between EGR valve 5P connector terminals No. 3 and No. 4.

EGR VALVE 5P CONNECTOR

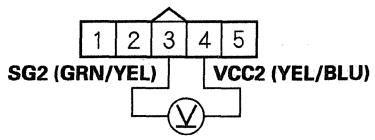

Wire side of female terminals

Is there about 5 V?

YES—Go to step 8.

NO—Go to step 7.

(cont'd)

DTC Troubleshooting (cont'd)

7. Measure the voltage between PCM connector terminals C12 and C14.

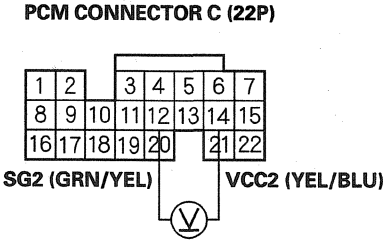

Wire side of female terminals

Is there about 5 V?

YES—Repair open in the wire between the EGR valve and the PCM (C12), then go to step 10.

NO—Go to step 14.

8. Turn the ignition switch to LOCK (0).
9. Replace the EGR valve (see page 11-388).
10. Turn the ignition switch to ON (II).
11. Reset the PCM with the HDS.
12. Do the PCM idle learn procedure (see page 11-313).
13. Check for Pending or Confirmed DTCs with the HDS.

Is DTC P0406 indicated?

YES—Check for poor connections or loose terminals at the EGR valve and the PCM, then go to step 1.

NO—Troubleshooting is complete. If any other Pending or Confirmed DTCs are indicated, go to the indicated DTC's troubleshooting. ■

14. Reconnect all connectors.
15. Update the PCM if it does not have the latest software (see page 11-230), or substitute a known-good PCM (see page 11-7).
16. Check for Pending or Confirmed DTCs with the HDS.

Is DTC P0406 indicated?

YES—Check for poor connections or loose terminals at the EGR valve and the PCM. If the PCM was updated, substitute a known-good PCM (see page 11-7), then recheck. If the PCM was substituted, go to step 1.

NO—If the PCM was updated, troubleshooting is complete. If the PCM was substituted, replace the original PCM (see page 11-232). If any other Pending or Confirmed DTCs are indicated, go to the indicated DTC's troubleshooting. ■

DTC P2413: EGR System Malfunction

NOTE: Before you troubleshoot, record all freeze data and any on-board snapshot, and review the general troubleshooting information (see page 11-3).

1. Turn the ignition switch to ON (II).
2. Clear the DTC with the HDS.
3. Start the engine. Hold the engine speed at 3,000 rpm without load (in P or N) until the radiator fan comes on, then let it idle.
4. Do the EGR TEST in the INSPECTION MENU with the HDS.

   Is the result OK?

   YES—Intermittent failure, the system is OK at this time. Check for poor connections or loose terminals at the EGR valve and the PCM. ■

   NO—Go to step 5.
5. Turn the ignition switch to LOCK (0).
6. Turn the ignition switch to ON (II).
7. Check the EGR VLS in the DATA LIST with the HDS.

   Is about 0 V indicated?

   YES—Go to step 8.

   NO—Go to step 19.
8. Turn the ignition switch to LOCK (0).
9. Disconnect the EGR valve 5P connector.
10. Turn the ignition switch to ON (II).
11. Measure the voltage between EGR valve 5P connector terminal No. 4 and body ground.

EGR VALVE 5P CONNECTOR

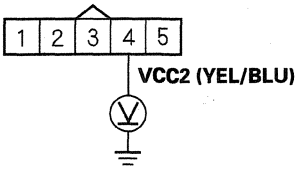

Wire side of female terminals

Is there about 5 V?

YES—Go to step 13.

NO—Go to step 12.

12. Measure the voltage between PCM connector terminal C14 and body ground.

PCM CONNECTOR C (22P)

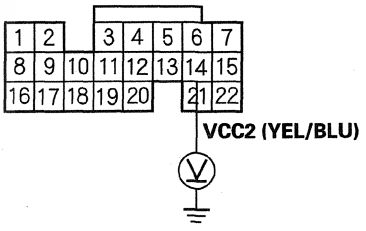

Wire side of female terminals

Is there about 5 V?

YES—Repair open in the wire between the EGR valve and the PCM (C14), then go to step 44.

NO—Go to step 51.

(cont'd)

DTC Troubleshooting (cont'd)

13. Turn the ignition switch to LOCK (0).
14. Jump the SCS line with the HDS.
15. Disconnect PCM connector C (22P).
16. Check for continuity between PCM connector terminal C13 and body ground.

PCM CONNECTOR C (22P)

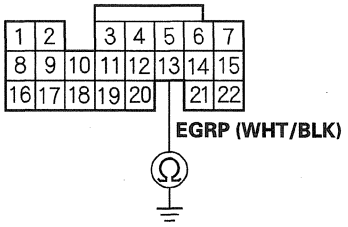

Wire side of female terminals

Is there continuity?

YES—Repair short in the wire between the PCM (C13) and the EGR valve, then go to step 44.

NO—Go to step 17.

17. Connect EGR valve 5P connector terminal No. 2 to body ground with a jumper wire.

EGR VALVE 5P CONNECTOR

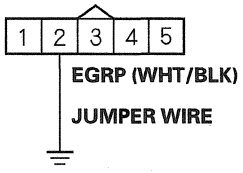

Wire side of female terminals

18. Check for continuity between PCM connector terminal C13 and body ground.

PCM CONNECTOR C (22P)

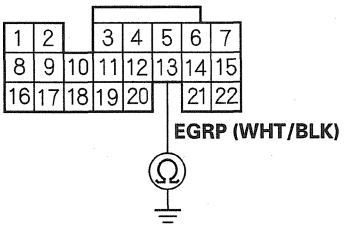

Wire side of female terminals

Is there continuity?

YES—Go to step 19.

NO—Repair open in the wire between the PCM (C13) and the EGR valve, then go to step 44.

19. Turn the ignition switch to LOCK (0).
20. Disconnect the EGR valve 5P connector.
21. At the EGR valve side, measure the resistance between EGR valve 5P connector terminals No. 2 and No. 3.

EGR VALVE 5P CONNECTOR

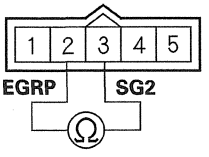

Terminal side of male terminals

Is there 100 kΩ or more?

YES—Go to step 43.

NO—Go to step 22.

22. At the EGR valve side, measure the resistance between EGR valve 5P connector terminals No. 2 and No. 4.

EGR VALVE 5P CONNECTOR

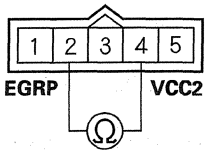

Terminal side of male terminals

Is there 100 kΩ or more?

YES—Go to step 43.

NO—Go to step 23.

23. Jump the SCS line with the HDS.

24. Disconnect PCM connector B (24P) (Skip this step if the connector is already disconnected.).

25. Check for continuity between PCM connector terminal B5 and body ground.

PCM CONNECTOR B (24P)

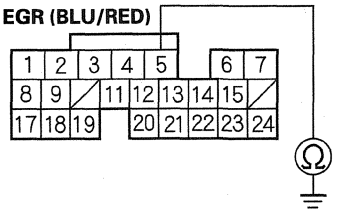

Wire side of female terminals

Is there continuity?

YES—Repair short in the wire between the PCM (B5) and the EGR valve, then go to step 44.

NO—Go to step 26.

26. Connect EGR valve 5P connector terminal No. 1 to body ground with a jumper wire.

EGR VALVE 5P CONNECTOR

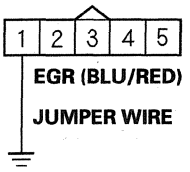

Wire side of female terminals

27. Check for continuity between PCM connector terminal B5 and body ground.

PCM CONNECTOR B (24P)

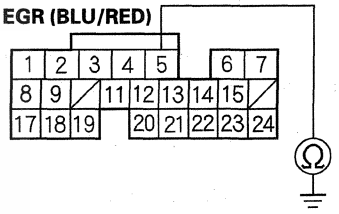

Wire side of female terminals

Is there continuity?

YES—Go to step 28.

NO—Repair open in the wire between the PCM (B5) and the EGR valve, then go to step 44.

(cont'd)

DTC Troubleshooting (cont'd)

28. Remove the jumper wire from the EGR valve 5P connector.

29. Check for continuity between EGR valve 5P connector terminal No. 5 and body ground.

EGR VALVE 5P CONNECTOR

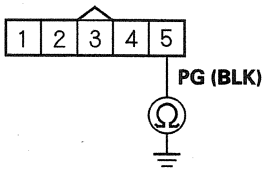

Wire side of female terminals

Is there continuity?

YES—Go to step 30.

NO—Repair open in the wire between the EGR valve and G101, then go to step 44.

30. Reconnect PCM connectors B (24P) and C (22P).

31. Connect the positive battery terminal to EGR valve 5P connector terminal No. 1 with a jumper wire.

EGR VALVE 5P CONNECTOR

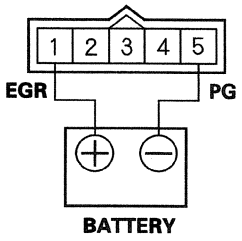

Terminal side of male terminals

32. Start the engine, and let it idle, then connect the negative battery terminal to EGR valve 5P connector terminal No. 5 with a jumper wire.

Does the engine stall or run rough?

YES—Go to step 51.

NO—Go to step 33.

33. Turn the ignition switch to LOCK (0).

34. Remove the EGR valve (see page 11-388).

35. Clean any carbon build-up on the EGR valve with Acura genuine throttle plate cleaner.

36. Install the EGR valve (see page 11-388).

37. Reconnect the EGR valve 5P connector.

38. Turn the ignition switch to ON (II).

39. Reset the PCM with the HDS.

40. Do the PCM idle learn procedure (see page 11-313).

41. Do the EGR TEST in the INSPECTION MENU with the HDS.

Is the result OK?

YES—Go to step 49.

NO—Go to step 42.

42. Turn the ignition switch to LOCK (0).

43. Replace the EGR valve (see page 11-388).

44. Reconnect all connectors.

45. Turn the ignition switch to ON (II).

46. Reset the PCM with the HDS.

47. Do the PCM idle learn procedure (see page 11-313).

48. Do the EGR TEST in the INSPECTION MENU with the HDS.

49. Check for Pending or Confirmed DTCs with the HDS.

    Is DTC P2413 indicated?

    YES—Check for poor connections or loose terminals at the EGR valve and the PCM, then go to step 1.

    NO—Go to step 50.

50. Monitor the OBD STATUS for DTC P2413 in the DTCs MENU with the HDS.

    Does the screen indicate PASSED?

    YES—Troubleshooting is complete. If any other Pending or Confirmed DTCs were indicated in step 49, go to the indicated DTC's troubleshooting. ■

    NO—If the screen indicates FAILED, check for poor connections or loose terminals at the EGR valve and the PCM, then go to step 1. If the screen indicates EXECUTING or OUT OF CONDITION, keep idling until a result comes on.

51. Turn the ignition switch to LOCK (0).

52. Reconnect all connectors.

53. Update the PCM if it does not have the latest software (see page 11-230), or substitute a known-good PCM (see page 11-7).

54. Do the EGR TEST in the INSPECTION MENU with the HDS.

55. Check for Pending or Confirmed DTCs with the HDS.

    Is DTC P2413 indicated?

    YES—Check for poor connections or loose terminals at the EGR valve and the PCM. If the PCM was updated, substitute a known-good PCM (see page 11-7), then recheck. If the PCM was substituted, go to step 1.

    NO—Go to step 56.

56. Monitor the OBD STATUS for DTC P2413 in the DTCs MENU with the HDS.

    Does the screen indicate PASSED?

    YES—If the PCM was updated, troubleshooting is complete. If the PCM was substituted, replace the original PCM (see page 11-232). If any other Pending or Confirmed DTCs were indicated in step 51, go to the indicated DTC's troubleshooting. ■

    NO—If the screen indicates FAILED, check for poor connections or loose terminals at the EGR valve and the PCM. If the PCM was updated, substitute a known-good PCM (see page 11-7), then recheck. If the PCM was substituted, go to step 1. If the screen indicates EXECUTING or OUT OF CONDITION, keep idling until a result comes on.

EGR Valve Replacement

1. Remove the engine cover (see step 2 on page 9-3).
2. Disconnect the EGR valve 5P connector (A).

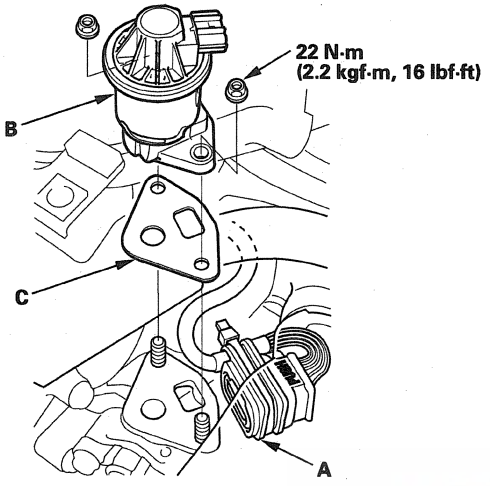

3. Remove the EGR valve (B).
4. Install the parts in the reverse order of removal with a new gasket (C).

EGR Pipe Removal and Installation

Removal

1. Raise the vehicle on a lift.
2. Remove the splash shield (see page 20-177).
3. Remove the EGR pipe mounting bolts (A) and nuts (B).

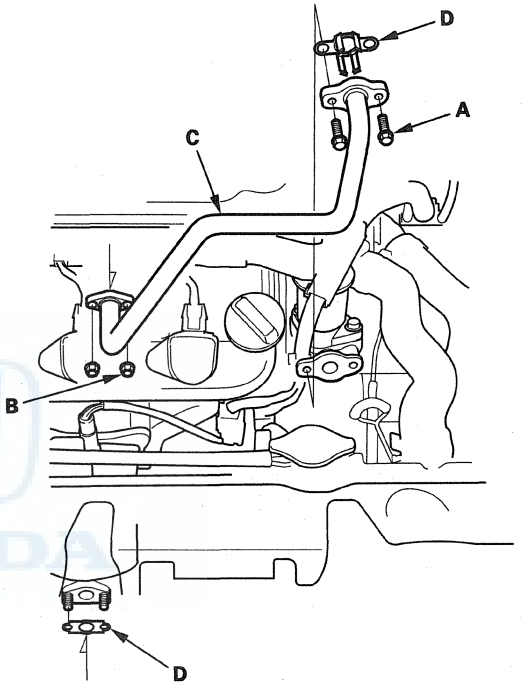

4. Remove the EGR pipe (C) and gaskets (D).

Installation

1. Set the EGR pipe (A) with new gaskets (B).

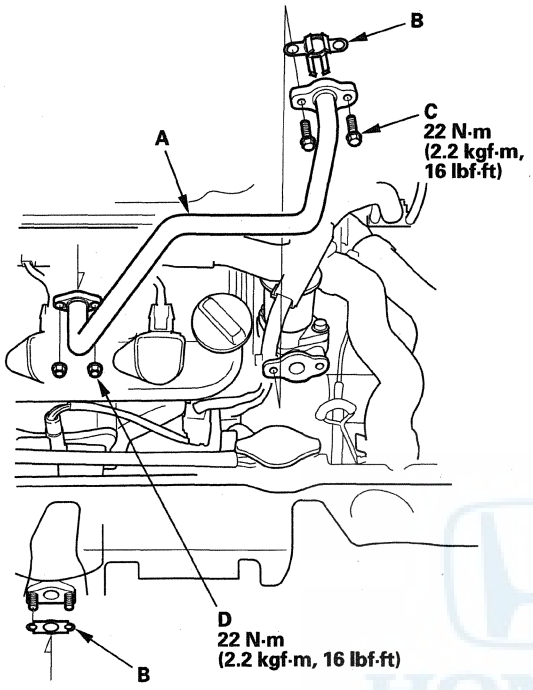

2. Install the EGR pipe with the mounting bolts (C) and nuts (D).

3. Install the splash shield (see page 20-177).

PCV System

Component Location Index

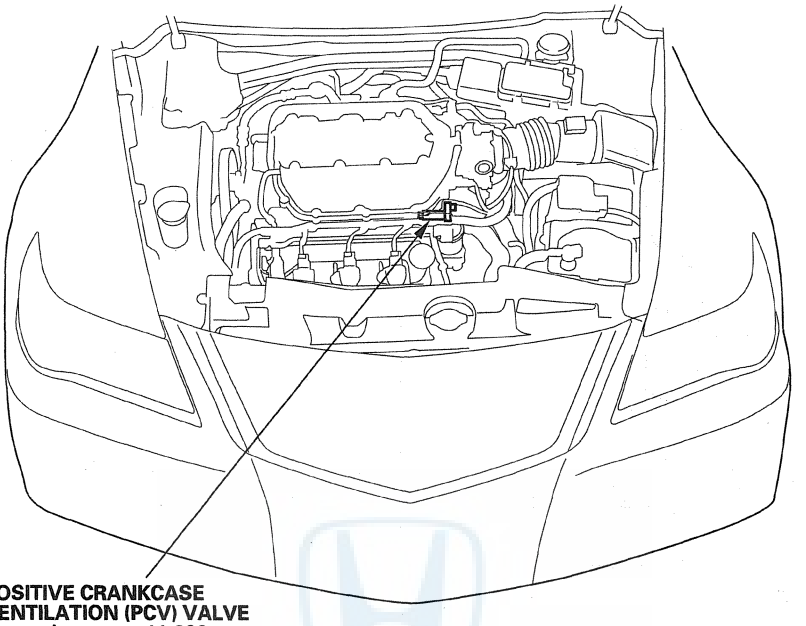

POSITIVE CRANKCASE VENTILATION (PCV) VALVE
Inspection, page 11-392
Replacement, page 11-392

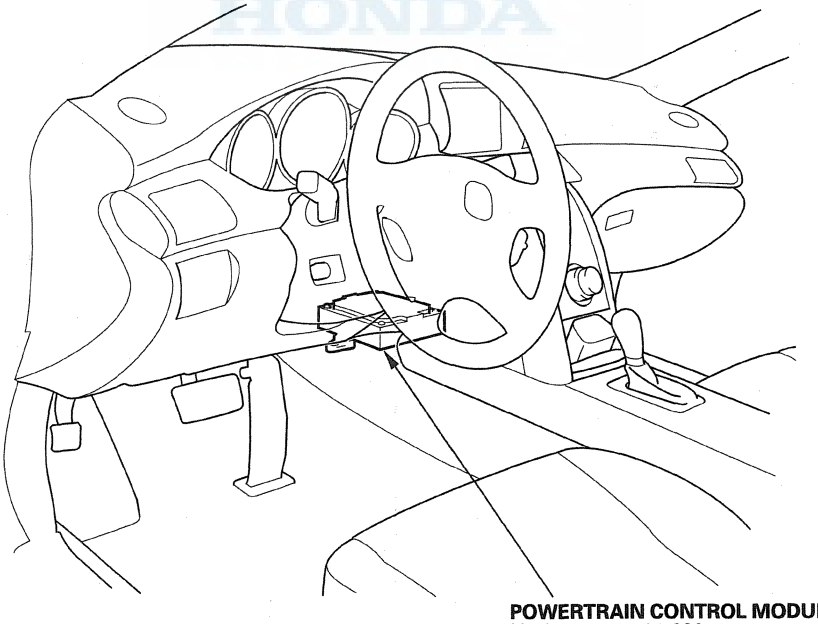

POWERTRAIN CONTROL MODULE (PCM)
Update, page 11-230
Substitution, page 11-7
Replacement, page 11-232

DTC Troubleshooting

DTC P2279: Intake Air System Leak

NOTE:
- Before you troubleshoot, record all freeze data and any on-board snapshot, and review the general troubleshooting information (see page 11-3).
- If DTC P0443 is stored at the same time as DTC P2279, troubleshoot DTC P0443 first, then recheck for DTC P2279.

1. Check for vacuum leaks at these parts:

   - PCV valve
   - PCV hose
   - Purge (PCS) line
   - Throttle body
   - Intake manifold
   - Brake booster
   - Brake booster hose

   Are the parts OK?

   YES—Go to step 2.

   NO—Repair or replace any damaged part(s), then go to step 4.

2. Start the engine. Hold the engine speed at 3,000 rpm without load (in P or N) until the radiator fan comes on, then let it idle for 1 minute.

3. Monitor the OBD STATUS for DTC P2279 in the DTCs MENU with the HDS.

   Does the screen indicate FAILED?

   YES—Check the camshaft timing (see page 6-18), then go to step 4.

   NO—If the screen indicates PASSED, intermittent failure, the system is OK at this time. If the screen indicates NOT COMPLETED, go to step 2 and recheck.

4. Reset the PCM with the HDS.

5. Do the PCM idle learn procedure (see page 11-313).

6. Start the engine. Hold the engine speed at 3,000 rpm without load (in P or N) until the radiator fan comes on, then let it idle for 1 minute.

7. Check for Pending or Confirmed DTCs with the HDS.

   Is DTC P2279 indicated?

   YES—Check for vacuum leaks at the PCV valve, the PCV hose, the purge (PCS) line, the throttle body, the intake manifold, the brake booster, and the brake booster hose, then go to step 1.

   NO—Go to step 8.

8. Monitor the OBD STATUS for DTC P2279 in the DTCs MENU with the HDS.

   Does the screen indicate PASSED?

   YES—Troubleshooting is complete. If any other Pending or Confirmed DTCs were indicated in step 7, go to the indicated DTC's troubleshooting. ■

   NO—If the screen indicates FAILED, go to step 1. If the screen indicates NOT COMPLETED, keep idling until a result comes on.

PCV System

PCV Valve Inspection

1. Remove the engine cover (see step 2 on page 9-3).
2. Check the PCV valve (A), the hoses (B), and the connections for leaks or restrictions.

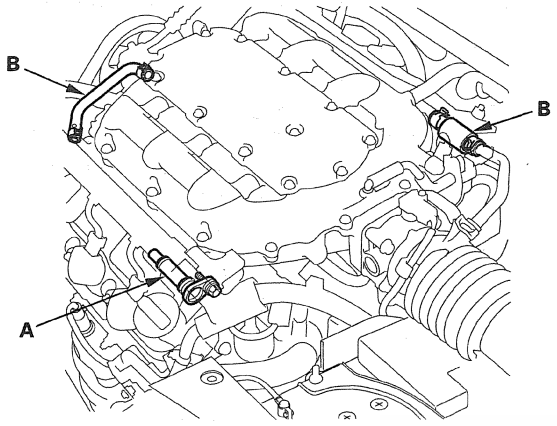

3. At idle, listen to the PCV valve (A) with a stethoscope as you lightly pinch the PCV hose (B) with your fingers or pliers several times. Each time the hose is pinched, the valve should click.

   If there is no clicking sound, check the PCV valve grommet for cracks or damage. If the grommet is OK, replace the PCV valve and recheck.

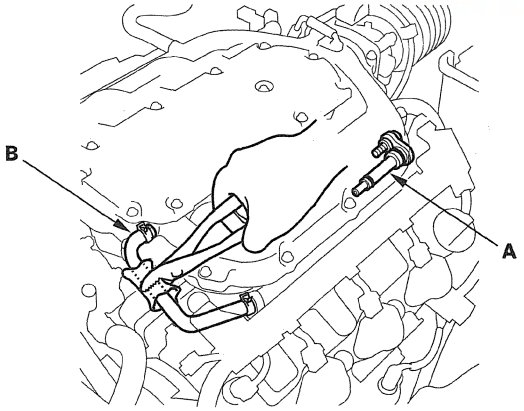

PCV Valve Replacement

1. Remove the engine cover (see step 2 on page 9-3).
2. Remove the bolt (A).

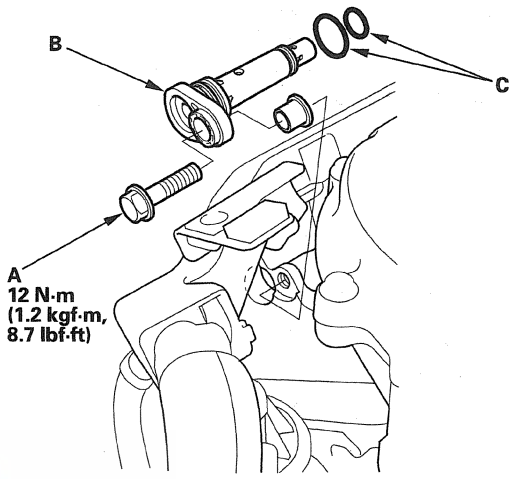

3. Remove the PCV valve (B).

   NOTE: Do not spill oil on the hot exhaust manifold.

4. Install the parts in the reverse order of removal.

   NOTE:
   - When installing a new PCV valve, make sure the O-rings (C) are in place.
   - When installing a used PCV valve, use new O-rings (C).

Component Location Index

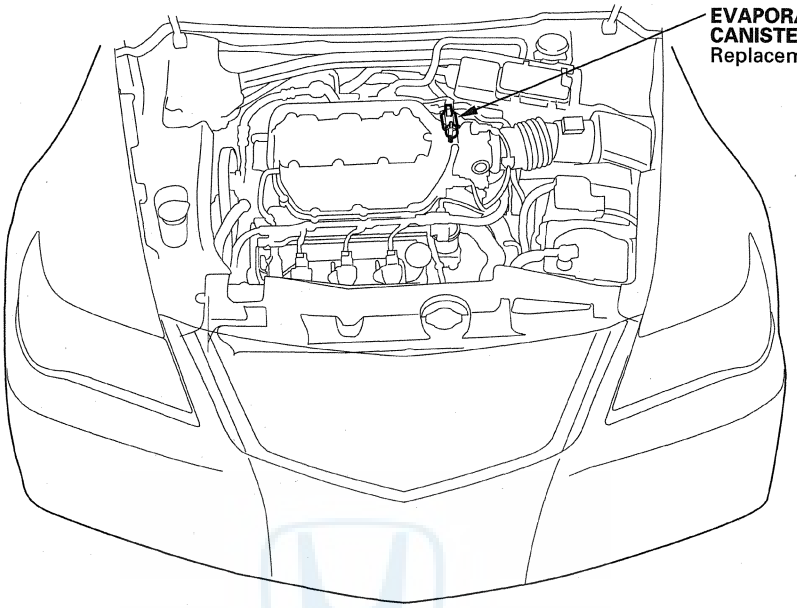

EVAPORATIVE EMISSION (EVAP) CANISTER PURGE VALVE
Replacement, page 11-423

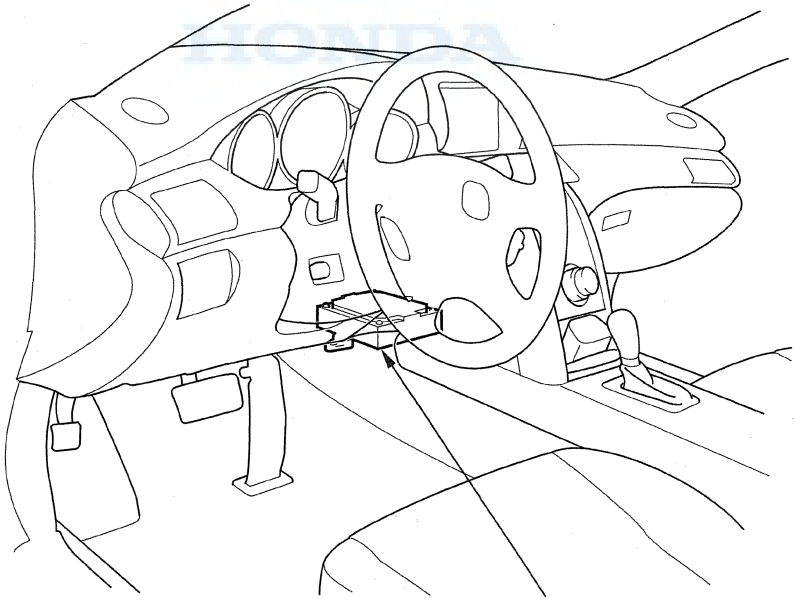

POWERTRAIN CONTROL MODULE (PCM)
Update, page 11-230
Substitution, page 11-7
Replacement, page 11-232

(cont'd)

Component Location Index (cont'd)

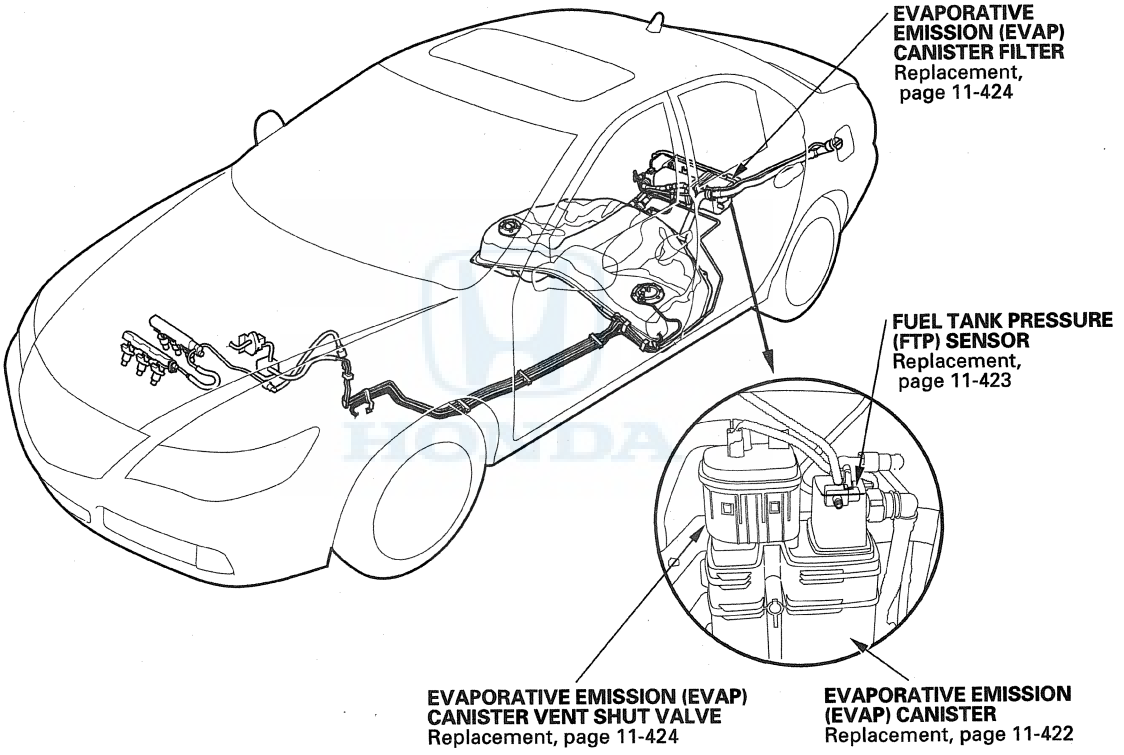

DTC Troubleshooting

DTC P0443: EVAP Canister Purge Valve Circuit Malfunction

Special Tools Required
Vacuum pump/gauge, 0—30 in.Hg, Snap-on YA4000A or equivalent, commercially available

NOTE: Before you troubleshoot, record all freeze data and any on-board snapshot, and review the general troubleshooting information (see page 11-3).

1. Turn the ignition switch to ON (II).
2. Clear the DTC with the HDS.
3. Start the engine. Hold the engine speed at 3,000 rpm without load (in P or N) until the radiator fan comes on, then let it idle.
4. Check for Pending or Confirmed DTCs with the HDS.

   Is DTC P0443 indicated?

   YES—Go to step 5.

   NO—Intermittent failure, the system is OK at this time. Check for poor connections or loose terminals at the EVAP canister purge valve and the PCM. ■
5. Turn the ignition switch to LOCK (0), and allow the engine to cool to below 140 °F (60 °C).
6. Disconnect the vacuum hose (A) from the EVAP canister purge valve joint (B) in the engine compartment, and connect a vacuum pump/gauge, 0—30 in.Hg, to the hose.

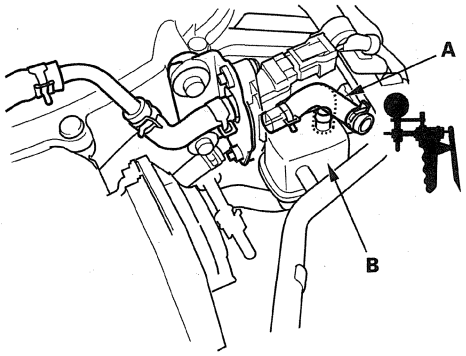

7. Start the engine, and let it idle.

   Is there vacuum?

   YES—Go to step 8.

   NO—Go to step 14.
8. Turn the ignition switch to LOCK (0).
9. Disconnect the EVAP canister purge valve 2P connector.
10. Check for continuity between EVAP canister purge valve 2P connector terminal No. 1 and body ground.

EVAP CANISTER PURGE VALVE 2P CONNECTOR

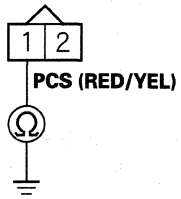

Wire side of female terminals

Is there continuity?

YES—Go to step 11.

NO—Go to step 24.

(cont'd)

DTC Troubleshooting (cont'd)

11. Jump the SCS line with the HDS.
12. Disconnect PCM connector B (24P).
13. Check for continuity between EVAP canister purge valve 2P connector terminal No. 1 and body ground.

EVAP CANISTER PURGE VALVE 2P CONNECTOR

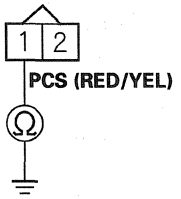

Wire side of female terminals

Is there continuity?

YES—Repair short in the wire between the EVAP canister purge valve and the PCM (B2), then go to step 25.

NO—Go to step 31.

14. Turn the ignition switch to LOCK (0).
15. Disconnect the EVAP canister purge valve 2P connector.
16. Turn the ignition switch to ON (II).
17. Measure the voltage between EVAP canister purge valve 2P connector terminal No. 2 and body ground.

EVAP CANISTER PURGE VALVE 2P CONNECTOR

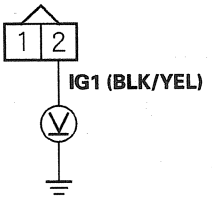

Wire side of female terminals

Is there battery voltage?

YES—Go to step 18.

NO—Repair open in the wire between the EVAP canister purge valve and the No. 18 ACG (15 A) fuse in the driver's under-dash fuse/relay box, then go to step 25.

18. Turn the ignition switch to LOCK (0).
19. Jump the SCS line with the HDS.
20. Disconnect PCM connector B (24P).
21. Connect EVAP canister purge valve 2P connector terminal No. 1 to body ground with a jumper wire.

EVAP CANISTER PURGE VALVE 2P CONNECTOR

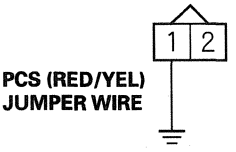

Wire side of female terminals

22. Check for continuity between PCM connector terminal B2 and body ground.

PCM CONNECTOR B (24P)

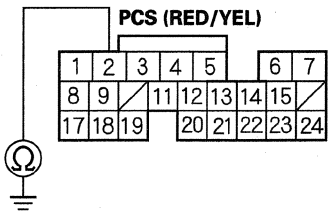

Wire side of female terminals

Is there continuity?

YES—Go to step 23.

NO—Repair open in the wire between the EVAP canister purge valve and the PCM (B2), then go to step 25.

23. At the valve side, measure the resistance between EVAP canister purge valve 2P connector terminals No. 1 and No. 2.

EVAP CANISTER PURGE VALVE 2P CONNECTOR

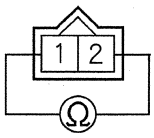

Terminal side of male terminals

Is there about 23—26 Ω at room temperature?

YES—Go to step 31.

NO—Go to step 24.

24. Replace the EVAP canister purge valve (see page 11-423).

25. Reconnect all connectors.

26. Turn the ignition switch to ON (II).

27. Reset the PCM with the HDS.

28. Do the PCM idle learn procedure (see page 11-313).

29. Check for Pending or Confirmed DTCs with the HDS.

Is DTC P0443 indicated?

YES—Check for poor connections or loose terminals at the EVAP canister purge valve and the PCM, then go to step 1.

NO—Go to step 30.

30. Monitor the OBD STATUS for DTC P0443 in the DTCs MENU with the HDS.

Does the screen indicate PASSED?

YES—Troubleshooting is complete. If any other Pending or Confirmed DTCs were indicated in step 29, go to the indicated DTC's troubleshooting. ■

NO—If the screen indicates FAILED, check for poor connections or loose terminals at the EVAP canister purge valve and the PCM, then go to step 1. If the screen indicates NOT COMPLETED, keep idling until a result comes on.

(cont'd)

DTC Troubleshooting (cont'd)

31. Reconnect all connectors.

32. Update the PCM if it does not have the latest software (see page 11-230), or substitute a known-good PCM (see page 11-7).

33. Start the engine, then let it idle.

34. Check for Pending or Confirmed DTCs with the HDS.

    Is DTC P0443 indicated?

    YES—Check for poor connections or loose terminals at the EVAP canister purge valve and the PCM. If the PCM was updated, substitute a known-good PCM (see page 11-7), then go to step 33. If the PCM was substituted, go to step 1.

    NO—Go to step 35.

35. Monitor the OBD STATUS for DTC P0443 in the DTCs MENU with the HDS.

    Does the screen indicate PASSED?

    YES—If the PCM was updated, troubleshooting is complete. If the PCM was substituted, replace the original PCM (see page 11-232). If any other Pending or Confirmed DTCs were indicated in step 34, go to the indicated DTC's troubleshooting. ■

    NO—If the screen indicates FAILED, check for poor connections or loose terminals at the EVAP canister purge valve and the PCM. If the PCM was updated, substitute a known-good PCM (see page 11-7), then go to step 33. If the PCM was substituted, go to step 1. If the screen indicates NOT COMPLETED, keep idling until a result comes on.

DTC P0451: FTP Sensor Circuit Range/ Performance Problem

NOTE:
- Before you troubleshoot, record all freeze data and any on-board snapshot, and review the general troubleshooting information (see page 11-3).
- If DTC P2422 is stored at the same time as DTC P0451, troubleshoot DTC P2422 first, then recheck for DTC P0451.

1. Turn the ignition switch to ON (II).

2. Clear the DTC with the HDS.

3. Start the engine, and let it idle for 1 minute.

4. Monitor the OBD STATUS for DTC P0451 in the DTCs MENU with the HDS.

   Does the screen indicate FAILED?

   YES—Go to step 5.

   NO—If the screen indicates PASSED, intermittent failure, the system is OK at this time. Check for poor connections or loose terminals at the FTP sensor and the PCM. If the screen indicates NOT COMPLETED, keep idling until a result comes on.

5. Turn the ignition switch to LOCK (0).

6. Replace the FTP sensor (see page 11-423).

7. Turn the ignition switch to ON (II).

8. Reset the PCM with the HDS.

9. Do the PCM idle learn procedure (see page 11-313).

10. Start the engine, and let it idle for 1 minute.

11. Check for Pending or Confirmed DTCs with the HDS.

    Is DTC P0451 indicated?

    YES—Check for poor connections or loose terminals at the FTP sensor and the PCM, then go to step 1.

    NO—Go to step 12.

12. Monitor the OBD STATUS for DTC P0451 in the DTCs MENU with the HDS.

    Does the screen indicate PASSED?

    YES—Troubleshooting is complete. If any other Pending or Confirmed DTCs were indicated in step 11, go to the indicated DTC's troubleshooting. ■

    NO—If the screen indicates FAILED, check for poor connections or loose terminals at the FTP sensor and the PCM, then go to step 1. If the screen indicates NOT COMPLETED, keep idling until a result comes on.

DTC P0452: FTP Sensor Circuit Low Voltage

NOTE: Before you troubleshoot, record all freeze data and any on-board snapshot, and review the general troubleshooting information (see page 11-3).

1. Turn the ignition switch to ON (II).
2. Clear the DTC with the HDS.
3. Turn the ignition switch to LOCK (0).
4. Remove the fuel fill cap.
5. Turn the ignition switch to ON (II).
6. Check the FTP SENSOR in the DATA LIST with the HDS.

   Is about −7.3 kPa (−2.16 in.Hg, −55 mmHg), or 0.3 V or less indicated?

   YES—Go to step 10.

   NO—Go to step 7.

7. Install the fuel fill cap.
8. Start the engine.
9. Monitor the OBD STATUS for DTC P0452 in the DTCs MENU with the HDS.

   Does the screen indicate FAILED?

   YES—Go to step 10.

   NO—If the screen indicates PASSED, intermittent failure, the system is OK at this time. Check for poor connections or loose terminals at the FTP sensor and the PCM. If the screen indicates NOT COMPLETED, keep idling until a result comes on.

(cont'd)

DTC Troubleshooting (cont'd)

10. Turn the ignition switch to LOCK (0).
11. Disconnect the FTP sensor 3P connector.
12. Turn the ignition switch to ON (II).
13. Check the FTP SENSOR in the DATA LIST with the HDS.

    Is about −7.3 kPa (−2.16 in.Hg, −55 mmHg), or 0.3 V or less indicated?

    YES—Go to step 20.

    NO—Go to step 14.

14. Measure the voltage between FTP sensor 3P connector terminal No. 1 and body ground.

FTP SENSOR 3P CONNECTOR

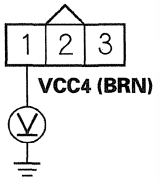

Wire side of female terminals

Is there about 5 V?

YES—Go to step 24.

NO—Go to step 15.

15. Turn the ignition switch to LOCK (0).
16. Jump the SCS line with the HDS.
17. Disconnect PCM connector E (31P).
18. Connect FTP sensor 3P connector terminal No. 1 to body ground with a jumper wire.

FTP SENSOR 3P CONNECTOR

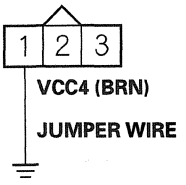

Wire side of female terminals

19. Check for continuity between PCM connector terminal E12 and body ground.

PCM CONNECTOR E (31P)

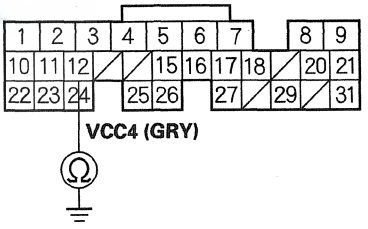

Wire side of female terminals

Is there continuity?

YES—Go to step 32.

NO—Repair open in the wire between the PCM (E12) and the FTP sensor, then go to step 26.

20. Turn the ignition switch to LOCK (0).

21. Jump the SCS line with the HDS.

22. Disconnect PCM connector E (31P).

23. Check for continuity between FTP sensor 3P connector terminal No. 2 and body ground.

FTP SENSOR 3P CONNECTOR

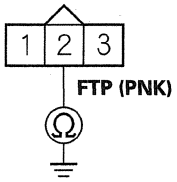

Wire side of female terminals

Is there continuity?

YES—Repair short in the wire between the PCM (E29) and the FTP sensor, then go to step 26.

NO—Go to step 32.

24. Turn the ignition switch to LOCK (0).

25. Replace the FTP sensor (see page 11-423).

26. Reconnect all connectors.

27. Turn the ignition switch to ON (II).

28. Reset the PCM with the HDS.

29. Do the PCM idle learn procedure (see page 11-313).

30. Check for Pending or Confirmed DTCs with the HDS.

Is DTC P0452 indicated?

YES—Check for poor connections or loose terminals at the FTP sensor and the PCM, then go to step 1.

NO—Go to step 31.

31. Monitor the OBD STATUS for DTC P0452 in the DTCs MENU with the HDS.

Does the screen indicate PASSED?

YES—Troubleshooting is complete. If any other Pending or Confirmed DTCs were indicated in step 30, go to the indicated DTC's troubleshooting. ■

NO—If the screen indicates FAILED, check for poor connections or loose terminals at the FTP sensor and the PCM, then go to step 1. If the screen indicates NOT COMPLETED, keep idling until a result comes on.

32. Reconnect all connectors.

33. Update the PCM if it does not have the latest software (see page 11-230), or substitute a known-good PCM (see page 11-7).

34. Start the engine, and let it idle.

35. Check for Pending or Confirmed DTCs with the HDS.

Is DTC P0452 indicated?

YES—Check for poor connections or loose terminals at the FTP sensor and the PCM. If the PCM was updated, substitute a known-good PCM (see page 11-7), then go to step 34. If the PCM was substituted, go to step 1.

NO—Go to step 36.

(cont'd)

DTC Troubleshooting (cont'd)

36. Monitor the OBD STATUS for DTC P0452 in the DTCs MENU with the HDS.

    Does the screen indicate PASSED?

    YES—If the PCM was updated, troubleshooting is complete. If the PCM was substituted, replace the original PCM (see page 11-232). If any other Pending or Confirmed DTCs were indicated in step 35, go to the indicated DTC's troubleshooting. ■

    NO—If the screen indicates FAILED, check for poor connections or loose terminals at the FTP sensor and the PCM. If the PCM was updated, substitute a known-good PCM (see page 11-7), then go to step 34. If the PCM was substituted, go to step 1. If the screen indicates NOT COMPLETED, keep idling until a result comes on.

DTC P0453: FTP Sensor Circuit High Voltage

NOTE: Before you troubleshoot, record all freeze data and any on-board snapshot, and review the general troubleshooting information (see page 11-3).

1. Turn the ignition switch to ON (II).
2. Clear the DTC with the HDS.
3. Turn the ignition switch to LOCK (0).
4. Remove the fuel fill cap.
5. Turn the ignition switch to ON (II).
6. Check the FTP SENSOR in the DATA LIST with the HDS.

   Is about 7.3 kPa (2.16 in.Hg, 55 mmHg), or 4.7 V or more indicated?

   YES—Go to step 10.

   NO—Go to step 7.

7. Install the fuel fill cap.
8. Start the engine.
9. Monitor the OBD STATUS for DTC P0453 in the DTCs MENU with the HDS.

   Does the screen indicate FAILED?

   YES—Go to step 10.

   NO—If the screen indicates PASSED, intermittent failure, the system is OK at this time. Check for poor connections or loose terminals at the FTP sensor and the PCM. If the screen indicates NOT COMPLETED, go to step 6 and recheck.

10. Turn the ignition switch to LOCK (0).
11. Disconnect the FTP sensor 3P connector.

12. Connect FTP sensor 3P connector terminals No. 2 and No. 3 with a jumper wire.

FTP SENSOR 3P CONNECTOR

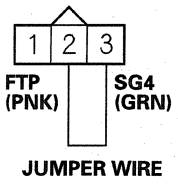

Wire side of female terminals

13. Turn the ignition switch to ON (II).

14. Check the FTP SENSOR in the DATA LIST with the HDS.

Is about 7.3 kPa (2.16 in.Hg, 55 mmHg), or 4.7 V or more indicated?

YES—Go to step 15.

NO—Go to step 25.

15. Measure the voltage between FTP sensor 3P connector terminals No. 1 and No. 3.

FTP SENSOR 3P CONNECTOR

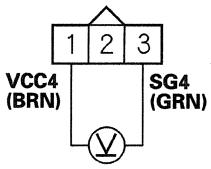

Wire side of female terminals

Is there about 5 V?

YES—Go to step 21.

NO—Go to step 16.

16. Turn the ignition switch to LOCK (0).

17. Jump the SCS line with the HDS.

18. Disconnect PCM connector E (31P).

19. Connect FTP sensor 3P connector terminal No. 3 to body ground with a jumper wire.

FTP SENSOR 3P CONNECTOR

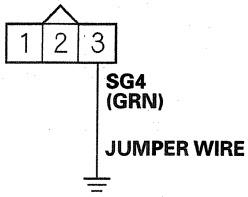

Wire side of female terminals

20. Check for continuity between PCM connector terminal E1 and body ground.

PCM CONNECTOR E (31P)

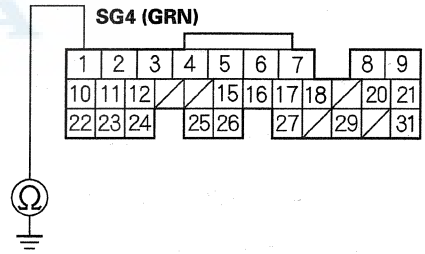

Wire side of female terminals

Is there continuity?

YES—Go to step 33.

NO—Repair open in the wire between the PCM (E1) and the FTP sensor, then go to step 27.

(cont'd)

DTC Troubleshooting (cont'd)

21. Turn the ignition switch to LOCK (0).

22. Connect PCM connector terminals E1 and E29 with a jumper wire.

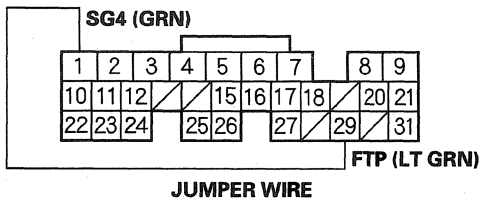

23. Turn the ignition switch to ON (II).

24. Check the FTP SENSOR in the DATA LIST with the HDS.

    Is about 7.3 kPa (2.16 in.Hg, 55 mmHg), or 4.7 V or more indicated?

    YES—Go to step 33.

    NO—Repair open in the wire between the PCM (E29) and the FTP sensor, then go to step 27.

25. Turn the ignition switch to LOCK (0).

26. Replace the FTP sensor (see page 11-423).

27. Reconnect all connectors.

28. Turn the ignition switch to ON (II).

29. Reset the PCM with the HDS.

30. Do the PCM idle learn procedure (see page 11-313).

31. Check for Pending or Confirmed DTCs with the HDS.

    Is DTC P0453 indicated?

    YES—Check for poor connections or loose terminals at the FTP sensor and the PCM, then go to step 1.

    NO—Go to step 32.

32. Monitor the OBD STATUS for DTC P0453 in the DTCs MENU with the HDS.

    Does the screen indicate PASSED?

    YES—Troubleshooting is complete. If any other Pending or Confirmed DTCs were indicated in step 31, go to the indicated DTC's troubleshooting. ■

    NO—If the screen indicates FAILED, check for poor connections or loose terminals at the FTP sensor and the PCM, then go to step 1. If the screen indicates NOT COMPLETED, keep idling until a result comes on.

33. Reconnect all connectors.

34. Update the PCM if it does not have the latest software (see page 11-230), or substitute a known-good PCM (see page 11-7).

35. Start the engine, and let it idle.

36. Check for Pending or Confirmed DTCs with the HDS.

    Is DTC P0453 indicated?

    YES—Check for poor connections or loose terminals at the FTP sensor and the PCM. If the PCM was updated, substitute a known-good PCM (see page 11-7), then go to step 35. If the PCM was substituted, go to step 1.

    NO—Go to step 37.

37. Monitor the OBD STATUS for DTC P0453 in the DTCs MENU with the HDS.

    Does the screen indicate PASSED?

    YES—If the PCM was updated, troubleshooting is complete. If the PCM was substituted, replace the original PCM (see page 11-232). If any other Pending or Confirmed DTCs were indicated in step 36, go to the indicated DTC's troubleshooting. ■

    NO—If the screen indicates FAILED, check for poor connections or loose terminals at the FTP sensor and the PCM. If the PCM was updated, substitute a known-good PCM (see page 11-7), then go to step 35. If the PCM was substituted, go to step 1. If the screen indicates NOT COMPLETED, keep idling until a result comes on.

DTC P0455: EVAP System Large Leak Detected

DTC P0456: EVAP System Very Small Leak Detected

NOTICE

The fuel system is designed to allow specified maximum vacuum and pressure conditions. Do not deviate from the vacuum and pressure tests as indicated in these procedures. Excessive pressure/vacuum would damage the EVAP components or cause eventual fuel tank failure.

Special Tools Required

- Vacuum pump/gauge, 0—30 in.Hg, Snap-on YA4000A or equivalent, commercially available
- Vacuum/pressure gauge, 0—4 in.Hg 07JAZ-001000B

NOTE:

- Before you troubleshoot, record all freeze data and any on-board snapshot, and review the general troubleshooting information (see page 11-3).
- Fresh fuel has a higher volatility that will create greater pressure/vacuum. The best condition for testing is less than a full tank of fresh fuel. If possible, to assist in leak detection, add 1 gallon of fresh fuel to the tank (as long as it will not fill the tank), just before starting these procedures.

1. Check the fuel fill cap (the cap must say TIGHTEN TO CLICK). It should turn 1/4 turn after it's tight, then it clicks.

   Is the correct fuel fill cap installed and properly tightened?

   YES—Go to step 2.

   NO—Replace or tighten the cap, then go to step 29.

(cont'd)

DTC Troubleshooting (cont'd)

2. Check the fuel fill cap seal (A) and the fuel fill pipe mating surface (B). Verify that the fuel fill cap tether cord (C) is not caught under the cap.

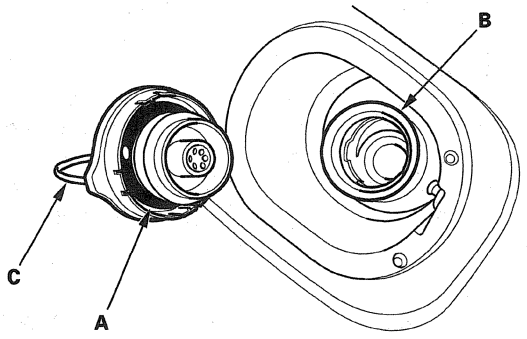

Is the fuel fill cap seal missing or damaged, is the fuel fill pipe damaged, or is the tether cord caught under the cap?

YES—Replace the fuel fill cap or the fuel fill pipe, then go to step 29.

NO—Go to step 3.

3. Turn the ignition switch to ON (II).

4. Clear the DTC with the HDS.

5. Do the EVAP FUNCTION TEST in the INSPECTION MENU with the HDS.

Is the result OK?

YES—Intermittent failure, the system is OK at this time. Check for poor connections or loose terminals at the FTP sensor, the EVAP canister purge valve, the EVAP canister vent shut valve, and the PCM. ■

NO—Go to step 6.

6. Turn the ignition switch to LOCK (0).

7. Check for a poor connection or damage at the fuel tank vapor recirculation tube.

Is the tube OK?

YES—Go to step 8.

NO—
- Replace the fuel tank vapor recirculation tube, then go to step 29.
- If needed, replace the fuel tank (see page 11-351), then go to step 29.

8. Remove the trunk floor trim panel.

9. Remove the EVAP access panel from the floor.

10. Disconnect the fuel tank vapor recirculation tube (A) and the fresh air hose (B) from the EVAP canister (C), and plug the EVAP canister port (D).

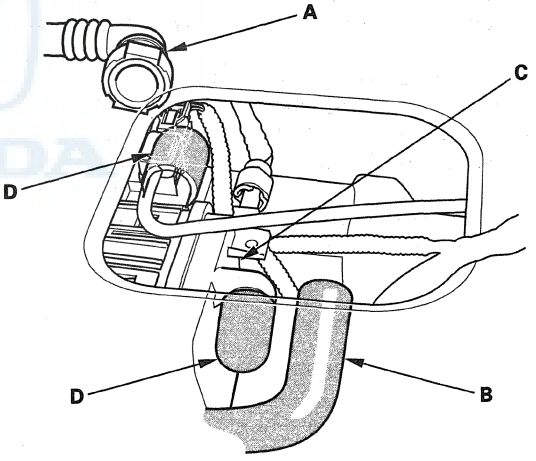

11. Disconnect the vacuum hose (engine side) (A) from the EVAP canister purge valve (B) in the engine compartment, and connect a T-fitting (C) from the vacuum gauge and the vacuum pump/gauge, 0—30 in.Hg, to the hose as shown.

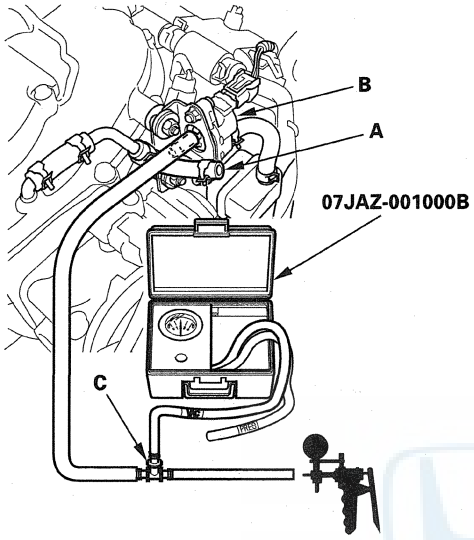

12. Turn the ignition switch to ON (II).

13. Select EVAP PCS ON in the INSPECTION MENU with the HDS.

14. Apply vacuum to the hose until the FTP reads 1.90 V (0.59 in.Hg, —15.1 mmHg).

    NOTE: Be careful not to exceed the vacuum. If you do, the FTP sensor can be damaged.

15. Select EVAP PCS OFF in the INSPECTION MENU with the HDS, then disconnect the vacuum pump/gauge.

16. Monitor the FTP SENSOR in the DATA LIST for 1 minute with the HDS.

    Does the voltage increase more than 0.2 V (0.1 in.Hg, 0.5 mmHg)?

    YES—Go to step 17.

    NO—Go to step 22.

17. Reconnect the vacuum hose (engine side) to the EVAP canister purge valve.

18. Disconnect the vacuum hose (EVAP canister side) from EVAP canister purge valve (A) in the engine compartment, and connect a T-fitting (B) from the vacuum gauge and the vacuum pump/gauge to the hose as shown.

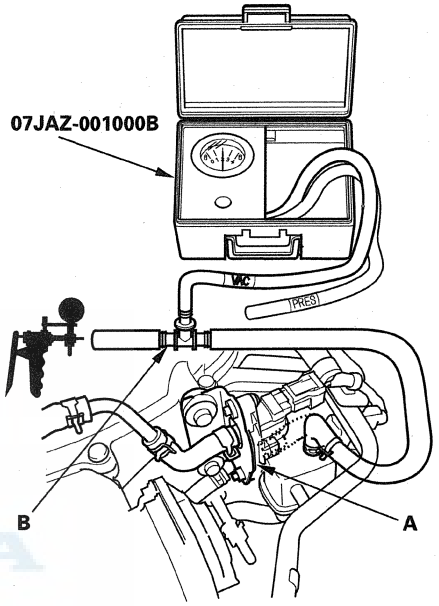

19. Apply vacuum to the hose until the FTP reads 1.90 V (—0.59 in.Hg, —15.1 mmHg).

    NOTE: Be careful not to exceed the vacuum. If you do, the FTP sensor can be damaged.

(cont'd)

DTC Troubleshooting (cont'd)

20. Monitor the FTP SENSOR in the DATA LIST for 1 minute with the HDS.

    Does the voltage increase more than 0.2 V (0.1 in.Hg, 0.5 mmHg)?

    YES—Go to step 21.

    NO—Replace the EVAP canister purge valve (see page 11-423), then go to step 30.

21. Check for a loose or damaged EVAP canister purge line between the EVAP canister and the EVAP canister purge valve, or a leaking EVAP canister purge valve.

    Are the line and the EVAP canister purge valve OK?

    YES—Replace these parts, then go to step 30:

    - FTP sensor O-ring
    - EVAP canister vent shut valve case and O-ring
    - EVAP canister

    NO—Reconnect or repair the EVAP canister purge hose, then go to step 30.

22. Reconnect the fresh air hose (A).

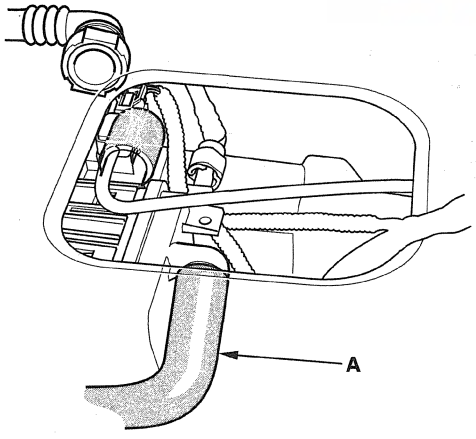

23. Reconnect the vacuum hose (engine side) to the EVAP canister purge valve.

24. Disconnect the vacuum hose (EVAP canister side) from EVAP canister purge valve (A) in the engine compartment, and connect a T-fitting (B) from the vacuum gauge and the vacuum pump/gauge to the hose as shown.

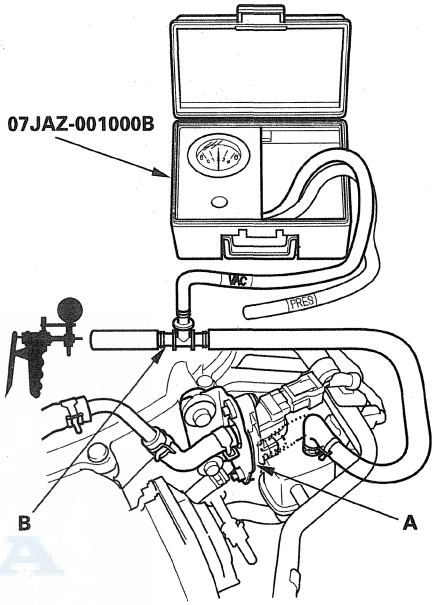

25. Select the CVS ON in the INSPECTION MENU with the HDS.

26. Apply vacuum to the fuel tank vapor recirculation tube (disconnected in step 10) until the FTP reads 1.90 V (−0.59 in.Hg, −15.1 mmHg).

    NOTE: Be careful not to exceed the vacuum. If you do, the FTP sensor can be damaged.

27. Monitor the FTP SENSOR in the DATA LIST for 1 minute with the HDS.

    Does the voltage increase more than 0.2 V (0.1 in.Hg, 2.5 mmHg)?

    YES—Replace the EVAP canister vent shut valve, then go to step 30.

    NO—Go to step 28.

28. Select EVAP CVS OFF in the INSPECTION MENU with the HDS.

29. Check these parts for looseness or damage:

    • Fuel fill pipe
    • Fuel vapor return pipe

    Are the parts OK?

    YES—Check the fuel tank unit base gasket (see page 11-347) and the fuel tank, then go to step 30.

    NO—Repair or replace the damaged part(s), then go to step 30.

30. Reconnect all hoses and connectors.

31. Turn the ignition switch to ON (II).

32. Reset the PCM with the HDS.

33. Do the PCM idle learn procedure (see page 11-313).

34. Do the EVAP FUNCTION TEST in the INSPECTION MENU with the HDS.

    Is the result OK?

    YES—Go to step 35.

    NO—Check for poor connections or loose terminals at the FTP sensor, the EVAP canister purge valve, the EVAP canister vent shut valve, and the PCM, then go to step 1.

35. Check for Pending or Confirmed DTCs with the HDS.

    Is DTC P0455 and/or P0456 indicated?

    YES—Check for poor connections or loose terminals at the FTP sensor, the EVAP canister purge valve, the EVAP canister vent shut valve, and the PCM, then go to step 1.

    NO—Troubleshooting is complete. If any other Pending or Confirmed DTCs are indicated, go to the indicated DTC's troubleshooting. ■

DTC P0496: EVAP System High Purge Flow Detected

NOTE: Before you troubleshoot, record all freeze data and any on-board snapshot, and review the general troubleshooting information (see page 11-3).

1. Turn the ignition switch to ON (II).

2. Clear the DTC with the HDS.

3. Do the EVAP FUNCTION TEST in the INSPECTION MENU with the HDS.

    Is the result OK?

    YES—Intermittent failure, the system is OK at this time. Check for poor connections or loose terminals at the FTP sensor, the EVAP canister purge valve, the EVAP canister vent shut valve, and the PCM. ■

    NO—Go to step 4.

4. Turn the ignition switch to LOCK (0).

5. Replace the EVAP canister purge valve (see page 11-423).

6. Turn the ignition switch to ON (II).

7. Reset the PCM with the HDS.

8. Do the PCM idle learn procedure (see page 11-313).

9. Do the EVAP FUNCTION TEST in the INSPECTION MENU with the HDS.

    Is the result OK?

    YES—Go to step 10.

    NO—Check for poor connections or loose terminals at the FTP sensor, the EVAP canister purge valve, the EVAP canister vent shut valve, and the PCM, then go to step 1.

(cont'd)

DTC Troubleshooting (cont'd)

10. Check for Pending or Confirmed DTCs with the HDS.

    Is DTC P0496 indicated?

    YES—Check for poor connections or loose terminals at the FTP sensor, the EVAP canister purge valve, the EVAP canister vent shut valve, and the PCM, then go to step 1.

    NO—Troubleshooting is complete. If any other Pending or Confirmed DTCs are indicated, go to the indicated DTC's troubleshooting. ■

DTC P0497: EVAP System Low Purge Flow Detected

Special Tools Required
- Vacuum pump/gauge, 0—30 in.Hg, Snap-on YA4000A or equivalent, commercially available
- Vacuum/pressure gauge, 0—4 in.Hg 07JAZ-001000B

NOTE: Before you troubleshoot, record all freeze data and any on-board snapshot, and review the general troubleshooting information (see page 11-3).

1. Turn the ignition switch to ON (II).
2. Clear the DTC with the HDS.
3. Select EVAP FUNCTION TEST in the INSPECTION MENU with the HDS.

   Is the result OK?

   YES—Intermittent failure, the system is OK at this time. Check for poor connections or loose terminals at the EVAP canister purge valve, the FTP sensor, and the PCM. ■

   NO—Go to step 4.

4. Turn the ignition switch to LOCK (0).
5. Check for a poor connection, a blockage, or damage at the EVAP canister purge line between the throttle body and the EVAP canister.

   Is the line OK?

   YES—Go to step 6.

   NO—Reconnect or repair the EVAP canister purge line, then go to step 24.

6. Disconnect the vacuum hose (A) from the EVAP canister purge valve (B).

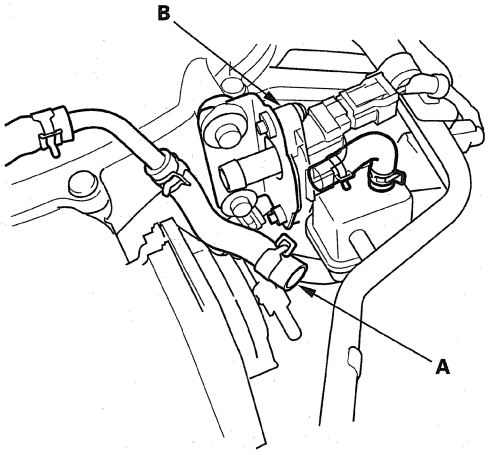

7. Disconnect the vacuum hose (A) from the purge line (at the EVAP canister side), and connect the vacuum pump/gauge, 0—30 in.Hg, to the hose with a T-fitting (B) as shown.

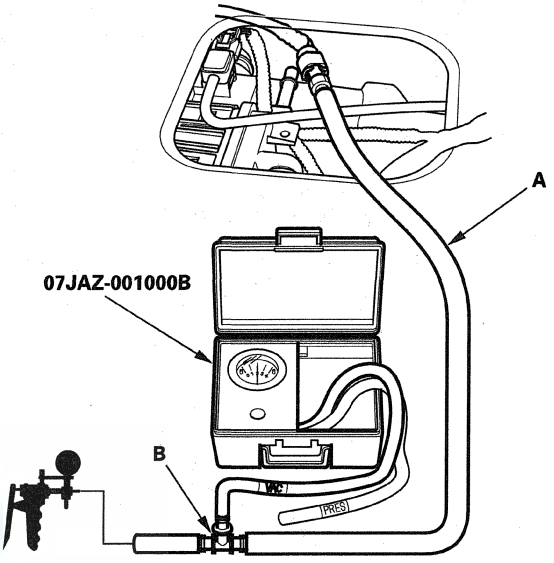

8. Turn the ignition switch to ON (II).
9. Apply about 2 kPa (0.6 in. Hg, 15 mmHg) of vacuum to the hose.
10. Select EVAP PCS ON in the INSPECTION MENU with the HDS.

    Does the vacuum release immediately?

    YES—Go to step 15.

    NO—Go to step 11.

11. Select EVAP PCS OFF in the INSPECTION MENU with the HDS.

(cont'd)

DTC Troubleshooting (cont'd)

12. Disconnect the vacuum hose (A) from the EVAP canister purge valve (B). Connect a T-fitting (C) from the vacuum gauge, and connect the vacuum pump/gauge, 0—30 in.Hg, and EVAP canister purge valve as shown.

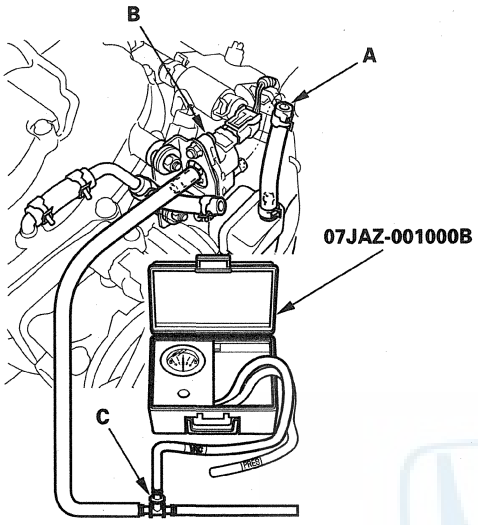

13. Apply about 2 kPa (0.6 in.Hg, 15 mmHg) of vacuum to the hose.

14. Select EVAP PCS ON in the INSPECTION MENU with the HDS.

Does the vacuum release immediately?

YES—Check for a blockage in the vacuum hose between the EVAP canister purge valve and the EVAP canister, then go to step 24.

NO—Replace the EVAP canister purge valve (see page 11-423), then go to step 24.

15. Connect the vacuum pump to the vacuum hose (A) as shown.

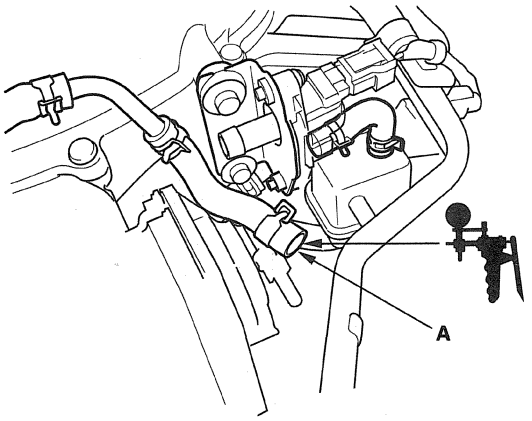

16. Start the engine, and let it idle.

Is there vacuum?

YES—Go to step 17.

NO—Check for a blockage in the vacuum hose between the EVAP canister purge valve and the intake manifold, then go to step 24.

17. Turn the ignition switch to LOCK (0).

18. Remove the FTP sensor with its connector connected (see page 11-423).

19. Connect a T-fitting (A) from the vacuum pump/gauge, 0—30 in.Hg, and connect the vacuum pump to the FTP sensor (B) as shown.

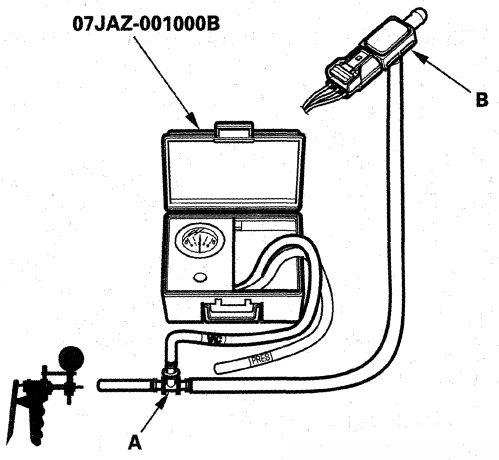

20. Turn the ignition switch to ON (II).

21. Check and record the FTP SENSOR reading in the DATA LIST with the HDS.

22. Slowly apply about 1.3 kPa (0.4 in.Hg, 10 mmHg) of vacuum to the hose.

23. Check the FTP SENSOR in the DATA LIST with the HDS.

    Does the value change?

    YES—Check for debris or a blockage at the EVAP canister port, then go to step 24.

    NO—Replace the FTP sensor (see page 11-423), then go to step 24.

24. Turn the ignition switch to ON (II).

25. Reset the PCM with the HDS.

26. Do the PCM idle learn procedure (see page 11-313).

27. Do the EVAP FUNCTION TEST in the INSPECTION MENU with the HDS.

    Is the result OK?

    YES—Go to step 28.

    NO—Check for poor connections or loose terminals at the EVAP canister purge valve, the FTP sensor, and the PCM, then go to step 1.

28. Check for Pending or Confirmed DTCs with the HDS.

    Is DTC P0497 indicated?

    YES—Check for poor connections or loose terminals at the EVAP canister purge valve, the FTP sensor, and the PCM, then go to step 1.

    NO—Troubleshooting is complete. If any other Pending or Confirmed DTCs are indicated, go to the indicated DTC's troubleshooting. ■

DTC Troubleshooting (cont'd)

DTC P0498: EVAP Canister Vent Shut Valve Circuit Low Voltage

NOTE: Before you troubleshoot, record all freeze data and any on-board snapshot, and review the general troubleshooting information (see page 11-3).

1. Turn the ignition switch to ON (II).
2. Clear the DTC with the HDS.
3. Check for Pending or Confirmed DTCs with the HDS.

   Is DTC P0498 indicated?

   YES—Go to step 6.

   NO—Go to step 4.
4. Select EVAP CVS ON in the INSPECTION MENU with the HDS.
5. Check for Pending or Confirmed DTCs with the HDS.

   Is DTC P0498 indicated?

   YES—Go to step 6.

   NO—Intermittent failure, the system is OK at this time. Check for poor connections or loose terminals at the EVAP canister vent shut valve and the PCM. ■
6. Turn the ignition switch to LOCK (0).
7. Disconnect the EVAP canister vent shut valve 2P connector.
8. Turn the ignition switch to ON (II).
9. Measure the voltage between EVAP canister vent shut valve 2P connector terminal No. 2 and body ground.

EVAP CANISTER VENT SHUT VALVE 2P CONNECTOR

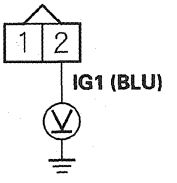

Wire side of female terminals

Is there battery voltage?

YES—Go to step 10.

NO—Repair open in the wire between the EVAP canister vent shut valve and the PGM-FI subrelay, then go to step 18.

10. Turn the ignition switch to LOCK (0).

11. At the valve side, measure the resistance between EVAP canister vent shut valve 2P connector terminals No. 1 and No. 2.

EVAP CANISTER VENT SHUT VALVE 2P CONNECTOR

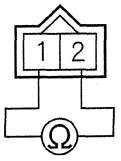

Terminal side of male terminals

Is there about 25—30 Ω at room temperature?

YES—Go to step 12.

NO—Go to step 18.

12. Turn the ignition switch to LOCK (0).
13. Jump the SCS line with the HDS.
14. Disconnect PCM connector E (31P).
15. Check for continuity between PCM connector terminal E10 and body ground.

PCM CONNECTOR E (31P)

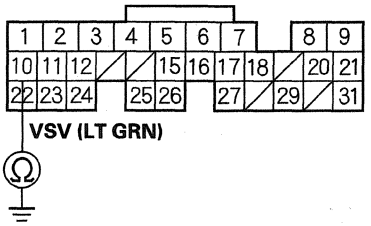

Wire side of female terminals

Is there continuity?

YES—Repair short in the wire between the EVAP canister vent shut valve and the PCM (E10), then go to step 19.

NO—Go to step 16.

16. Connect EVAP canister vent shut valve 2P connector terminal No. 1 to body ground with a jumper wire.

EVAP CANISTER VENT SHUT VALVE 2P CONNECTOR

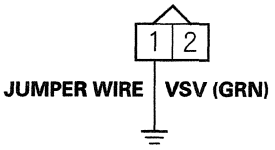

Wire side of female terminals

(cont'd)

DTC Troubleshooting (cont'd)

17. Check for continuity between PCM connector terminal E10 and body ground.

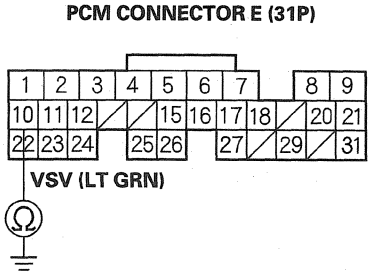

Wire side of female terminals

Is there continuity?

YES—Go to step 26.

NO—Repair open in the wire between the EVAP canister vent shut valve and the PCM (E10), then go to step 19.

18. Replace the EVAP canister vent shut valve (see page 11-424).

19. Reconnect all connectors.

20. Turn the ignition switch to ON (II).

21. Reset the PCM with the HDS.

22. Do the PCM idle learn procedure (see page 11-313).

23. Select EVAP CVS ON in the INSPECTION MENU with the HDS.

24. Check for Pending or Confirmed DTCs with the HDS.

Is DTC P0498 indicated?

YES—Check for poor connections or loose terminals at the EVAP canister vent shut valve and the PCM, then go to step 1.

NO—Go to step 25.

25. Monitor the OBD STATUS for DTC P0498 in the DTCs MENU with the HDS.

Does the screen indicate PASSED?

YES—Troubleshooting is complete. If any other Pending or Confirmed DTCs were indicated in step 24, go to the indicated DTC's troubleshooting. ■

NO—If the screen indicates FAILED, check for poor connections or loose terminals at the EVAP canister vent shut valve and the PCM, then go to step 1. If the screen indicates NOT COMPLETED, go to step 23.

26. Reconnect all connectors.

27. Update the PCM if it does not have the latest software (see page 11-230), or substitute a known-good PCM (see page 11-7).

28. Select EVAP CVS ON in the INSPECTION MENU with the HDS.

29. Check for Pending or Confirmed DTCs with the HDS.

    Is DTC P0498 indicated?

    YES—Check for poor connections or loose terminals at the EVAP canister vent shut valve and the PCM. If the PCM was updated, substitute a known-good PCM (see page 11-7), then go to step 28. If the PCM was substituted, go to step 1.

    NO—Go to step 30.

30. Monitor the OBD STATUS for DTC P0498 in the DTCs MENU with the HDS.

    Does the screen indicate PASSED?

    YES—If the PCM was updated, troubleshooting is complete. If the PCM was substituted, replace the original PCM (see page 11-232). If any other Pending or Confirmed DTCs were indicated in step 29, go to the indicated DTC's troubleshooting. ■

    NO—If the screen indicates FAILED, check for poor connections or loose terminals at the EVAP canister vent shut valve and the PCM. If the PCM was updated, substitute a known-good PCM (see page 11-7), then go to step 28. If the PCM was substituted, go to step 1. If the screen indicates NOT COMPLETED, go to step 28.

DTC P0499: EVAP Canister Vent Shut Valve Circuit High Voltage

NOTE: Before you troubleshoot, record all freeze data and any on-board snapshot, and review the general troubleshooting information (see page 11-3).

1. Turn the ignition switch to ON (II).

2. Clear the DTC with the HDS.

3. Select EVAP CVS ON in the INSPECTION MENU with the HDS.

4. Check for Pending or Confirmed DTCs with the HDS.

    Is DTC P0499 indicated?

    YES—Go to step 5.

    NO—Intermittent failure, the system is OK at this time. Check for poor connections or loose terminals at the EVAP canister vent shut valve and the PCM. ■

5. Update the PCM if it does not have the latest software (see page 11-230), or substitute a known-good PCM (see page 11-7).

6. Select EVAP CVS ON in the INSPECTION MENU with the HDS.

7. Check for Pending or Confirmed DTCs with the HDS.

    Is DTC P0499 indicated?

    YES—Check for poor connections or loose terminals at the EVAP canister vent shut valve and the PCM. If the PCM was updated, substitute a known-good PCM (see page 11-7), then go to step 6. If the PCM was substituted, go to step 1.

    NO—Go to step 8.

(cont'd)

DTC Troubleshooting (cont'd)

8. Monitor the OBD STATUS for DTC P0499 in the DTCs MENU with the HDS.

   Does the screen indicate PASSED?

   YES—If the PCM was updated, troubleshooting is complete. If the PCM was substituted, replace the original PCM (see page 11-232). If any other Pending or Confirmed DTCs were indicated in step 7, go to the indicated DTC's troubleshooting. ■

   NO—If the screen indicates FAILED, check for poor connections or loose terminals at the EVAP canister vent shut valve and the PCM. If the PCM was updated, substitute a known-good PCM (see page 11-7), then go to step 6. If the PCM was substituted, go to step 1. If the screen indicates NOT COMPLETED, go to step 6.

DTC P1454: FTP Sensor Range/Performance Problem

DTC P2422: EVAP Canister Vent Shut Valve Stuck Closed Malfunction

NOTE: Before you troubleshoot, record all freeze data and any on-board snapshot, and review the general troubleshooting information (see page 11-3).

1. Turn the ignition switch to ON (II).
2. Clear the DTC with the HDS.
3. Turn the ignition switch to LOCK (0).
4. Remove the fuel fill cap, and wait 1 minute.
5. Turn the ignition switch to ON (II).
6. Check the FTP SENSOR in the DATA LIST with the HDS.

   Is it between −0.67 and 0.67 kPa (−0.2 and 0.2 in.Hg, −5 and 5 mmHg), or 2.4 and 2.6 V?

   YES—Go to step 7.

   NO—Go to step 18.

7. Install the fuel fill cap.
8. Clear the DTC with the HDS.
9. Start the engine. Hold the engine speed at 3,000 rpm without load (in P or N) until the radiator fan comes on, then let it idle.
10. Monitor the OBD STATUS for DTC P1454 in the DTCs MENU with the HDS.

    Does the screen indicate FAILED?

    YES—Go to step 11.

    NO—If the screen indicates PASSED, intermittent failure, the system is OK at this time. Check for poor connections or loose terminals at the FTP sensor, the EVAP canister vent shut valve, and the PCM. Also check for a blockage in the vent hoses and the drain joint. If the screen indicates NOT COMPLETED, keep idling until a result comes on.

11. Clear the DTC with the HDS.

12. Turn the ignition switch to LOCK (0).

13. Remove the EVAP canister vent shut valve from the EVAP canister (see page 11-424).

14. Connect the 2P connector to the EVAP canister vent shut valve.

15. Turn the ignition switch to ON (II).

16. Select EVAP CVS ON in the INSPECTION MENU with the HDS.

17. Check the EVAP canister vent shut valve (A) operation.

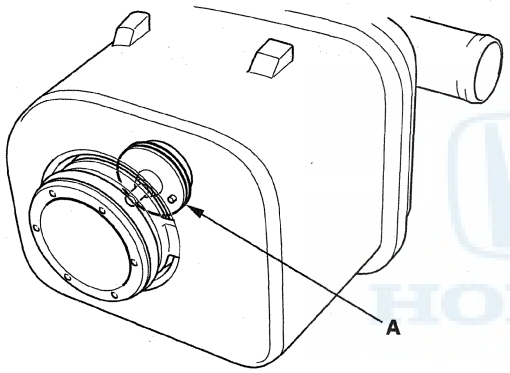

Does the valve operate?

YES—Check for a blockage in the EVAP canister, the vent hoses, and the drain joint, then install the EVAP canister vent shut valve, and go to step 26.

NO—Replace the EVAP canister vent shut valve (see page 11-424), then go to step 26.

18. Remove the trunk front trim panel (see page 20-83).

19. Remove the access panel from the floor (see page 11-423).

20. Disconnect the air tube (A) from the FTP sensor (B).

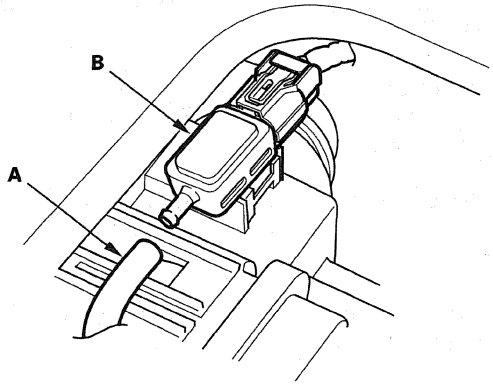

21. Check the FTP SENSOR in the DATA LIST with the HDS.

Is it between −0.67 kPa and 0.67 kPa (−0.2 and 0.2 in.Hg, −5 and 5 mmHg), or 2.4 and 2.6 V?

YES—Check for a blockage in the FTP sensor air tube, then go to step 26.

NO—Go to step 22.

22. Turn the ignition switch to LOCK (0).

23. Remove the FTP sensor (A) from the EVAP canister with its connector connected.

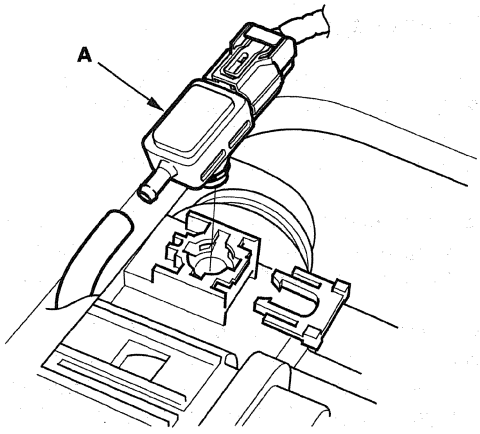

(cont'd)

DTC Troubleshooting (cont'd)

24. Turn the ignition switch to ON (II).

25. Check the FTP SENSOR in the DATA LIST with the HDS.

    Is it between −0.67 kPa and 0.67 kPa (−0.2 and 0.2 in.Hg, −5 and 5 mmHg), or 2.4 and 2.6 V?

    YES—Check for debris or clogging at the EVAP canister and the FTP sensor port, then go to step 26.

    NO—Replace the FTP sensor (see page 11-423), then go to step 26.

26. Turn the ignition switch to ON (II).

27. Reset the PCM with the HDS.

28. Do the PCM idle learn procedure (see page 11-313).

29. Start the engine. Hold the engine speed at 3,000 rpm without load (in P or N) until the radiator fan comes on, then let it idle.

30. Check for Pending or Confirmed DTCs with the HDS.

    Is DTC P1454 and/or P2422 indicated?

    YES—Check for poor connections or loose terminals at the FTP sensor, the EVAP canister vent shut valve, and the PCM, then go to step 1.

    NO—Go to step 31.

31. Monitor the OBD STATUS for DTC P1454 and/or P2422 in the DTCs MENU with the HDS.

    Does the screen indicate PASSED?

    YES—Troubleshooting is complete. If any other Pending or Confirmed DTCs were indicated in step 30, go to the indicated DTC's troubleshooting. ■

    NO—If the screen indicates FAILED, check for poor connections or loose terminals at the FTP sensor, the EVAP canister vent shut valve, and the PCM, then go to step 1. If the screen indicates NOT COMPLETED, keep idling until a result comes on.

DTC P145C: EVAP System Purge Flow Malfunction

NOTE:
- Before you troubleshoot, record all freeze data and any on-board snapshot, and review the general troubleshooting information (see page 11-3).
- If DTC P145C is indicated alone, do the troubleshooting for DTC P0496 and P0497 using the freeze data for P145C.
- If DTC P0497 and P145C are stored at the same time, check for a poor connection, a blockage, or damage at the EVAP canister purge line between the EVAP canister purge valve and the EVAP canister, or a stuck closed EVAP canister purge valve.
- If any of DTCs listed below are indicated at the same time as DTC P145C, troubleshoot those DTCs first, then recheck for P145C.

P0496, P0497: EVAP system purge flow

Fuel Cap Warning Message System Troubleshooting

Special Tools Required
- Vacuum pump/gauge, 0—30 in.Hg, Snap-on YA4000A or equivalent, commercially available
- Vacuum/pressure gauge, 0—4 in.Hg 07JAZ-001000B

Do this procedure if the fuel cap warning message comes on frequently, or if the message does not go off after the fuel fill cap is tightened and the vehicle is driven several days.

1. Check the fuel fill cap (the cap must say TIGHTEN TO CLICK). It should turn 1/4 after it's tight, then it clicks.

   Is the correct fuel fill cap installed and properly tightened?

   YES—Go to step 2.

   NO—Replace or tighten the cap, then go to step 13.

2. Check the fuel fill cap seal (A) and the fuel fill pipe mating surface (B). Verify that the fuel fill cap tether cord (C) is not caught under the cap.

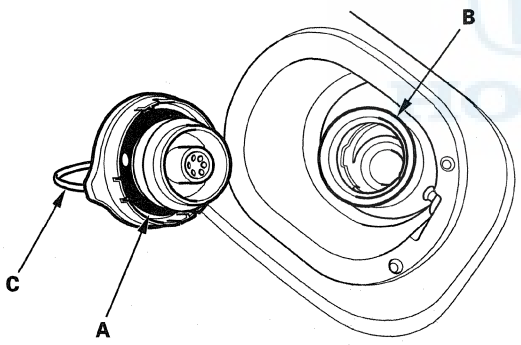

   Is the fuel fill cap seal missing or damaged, is the fuel fill pipe damaged, or is the tether cord caught under the cap?

   YES—Replace the fuel fill cap or the fuel fill pipe, then go to step 13.

   NO—Go to step 3.

3. Reinstall and tighten the fuel fill cap.

4. Clear the DTC with the HDS.

5. Start the engine. Hold the engine speed at 3,000 rpm without load (in P or N) until the radiator fan comes on, then let it idle for 1 minute.

6. Test drive at 45 mph (72 km/h) for 1 minute or more.

   Does the fuel fill cap warning message come on?

   YES—Go to step 7.

   NO—Intermittent failure, the system is OK at this time.

7. Turn the ignition switch to LOCK (0).

8. Disconnect the vacuum hose (A) from the EVAP canister purge valve (B) in the engine compartment, then connect a T-fitting (C) from the vacuum gauge, and connect the vacuum pump/gauge 0—30 in.Hg, to the EVAP canister purge valve as shown.

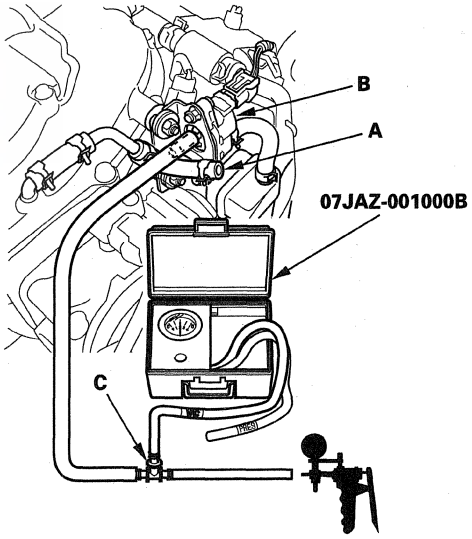

(cont'd)

Fuel Cap Warning Message System Troubleshooting (cont'd)

9. Turn the ignition switch to ON (II).
10. Apply about 2 kPa (0.6 in.Hg, 15 mmHg) of vacuum to the hose.
11. Select EVAP PCS ON in the INSPECTION MENU with the HDS.

    Does the vacuum release immediately?

    YES—Check for a blockage in the vacuum hose between the EVAP canister purge valve and the EVAP canister, then go to step 12.

    NO—Replace the EVAP canister purge valve (see page 11-423), then go to step 12.
12. Install the parts in the reverse order of removal.
13. Turn the ignition switch to ON (II).
14. Reset the PCM with the HDS.
15. Do the PCM idle learn procedure (see page 11-313).
16. Test-drive at 45 mph (72 km/h) for 1 minute or more.

    Does the fuel cap warning message come on?

    YES—Go to step 1 and recheck.

    NO—Troubleshooting is complete.■

EVAP Canister Replacement

1. Remove the propeller shaft (see page 16-44).
2. Remove the rear differential (see page 15-101).
3. Disconnect the connectors (A) and the hoses (B).

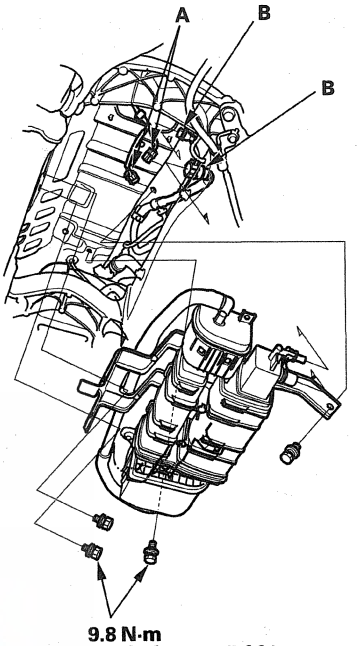

4. Remove the EVAP canister (A).

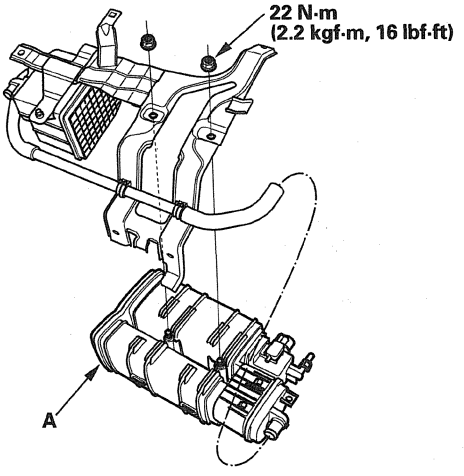

5. Install the parts in the reverse order of removal.

FTP Sensor Replacement

1. Remove the trunk front trim panel (see page 20-83).
2. Remove the access panel (A) from the floor.

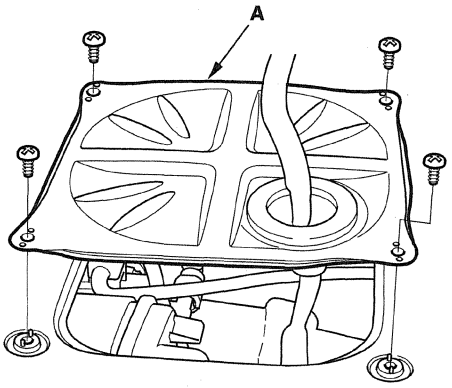

3. Disconnect the hose (A) and the FTP sensor 3P connector (B).

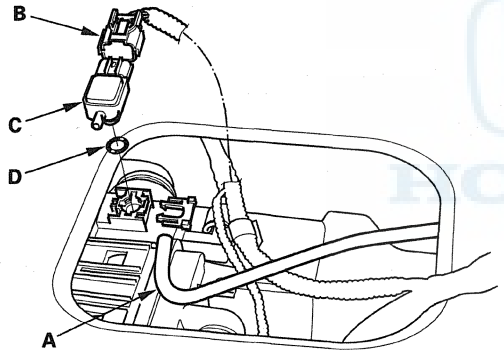

4. Remove the FTP sensor (C).
5. Install the parts in the reverse order of removal with a new O-ring (D).

EVAP Canister Purge Valve Replacement

1. Remove the engine cover (see step 2 on page 9-3).
2. Disconnect the hoses (A) and the EVAP canister purge valve 2P connector (B).

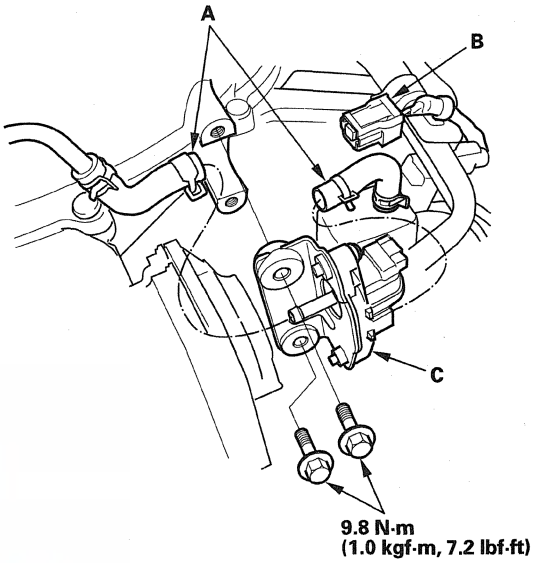

3. Remove the EVAP canister purge valve and the bracket (C).
4. Remove the EVAP canister purge valve (A) from the bracket (B).

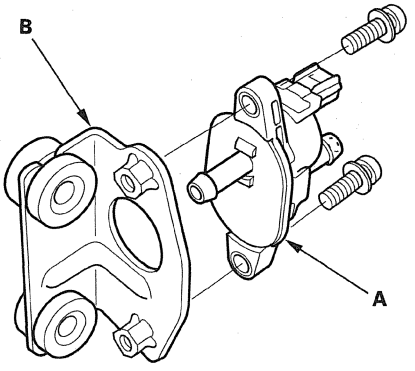

5. Install the parts in the reverse order of removal.

EVAP Canister Vent Shut Valve Replacement

1. Remove the trunk front trim panel (see page 20-83).
2. Remove the access panel (A) from the floor.

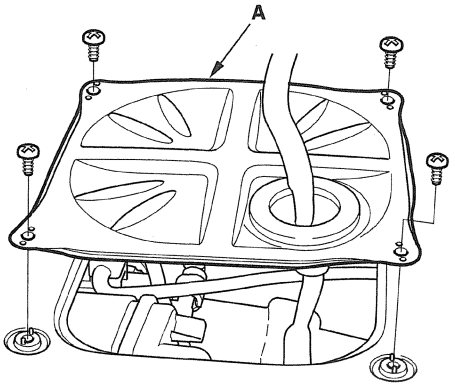

3. Disconnect the EVAP canister vent shut valve 2P connector (A), FTP sensor 3P connector (B), and the hose (C).

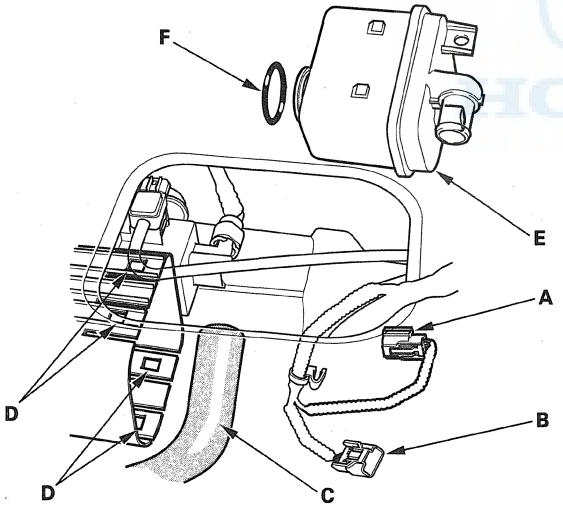

4. Pry the lock tabs (D) outward, and remove the EVAP canister vent shut valve (E).

   NOTE: Be careful not to damage the lock tabs.

5. Install the parts in the reverse order of removal with a new O-ring (F).

   NOTE: Do not coat the new O-ring with oil or other lubricants.

EVAP Canister Filter Replacement

1. Remove the EVAP canister (see page 11-422).
2. Disconnect the hose (A).

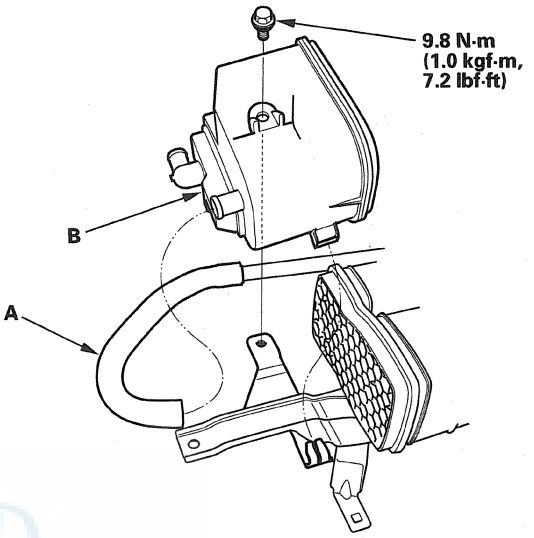

3. Remove the EVAP canister filter (B).
4. Install the parts in the reverse order of removal.

Transaxle

Automatic Transmission 14-1

Rear Differential 15-1

Driveline/Axle 16-1

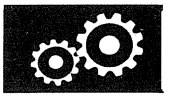

HONDA

SUPPLEMENTAL RESTRAINT SYSTEM (SRS) (If automatic transmission maintenance is required)

The Acura RL SRS includes a driver's airbag in the steering wheel hub, a passenger's airbag in the dashboard above the glove box, seat belt tensioners in the front seat belt retractors, side curtain airbags in the sides of the roof, and side airbags in the front seat-backs. Information necessary to safely service the SRS is included in this Service Manual. Items marked with an asterisk (*) on the contents page include or are located near SRS components. Servicing, disassembling, or replacing these items require special precautions and tools, and should be done by an authorized Acura dealer.

- To avoid rendering the SRS inoperative, which could lead to personal injury or death in the event of a severe frontal or side collision, all SRS service work should be done by an authorized Acura dealer.
- Improper service procedures, including incorrect removal and installation of the SRS, could lead to personal injury caused by unintentional deployment of the airbags, side airbags, and/or side curtain airbags.
- Do not bump or impact the SRS unit, front impact sensors, side impact sensors, or rear safing sensor, especially when the ignition switch is in ON (II), or for at least 3 minutes after the ignition switch is turned to LOCK (0); otherwise, the system may fail in a collision, or the airbags may deploy.
- SRS electrical connectors are identified by yellow color coding. Related components are located in the steering column, center console, dashboard, driver's dashboard lower cover, in the dashboard above the glove box, in the front seats, in the roof side, and around the floor. Do not use electrical test equipment on these circuits.

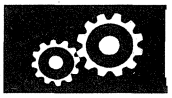

HONDA

Automatic Transmission

Automatic Transmission

Special Tools 14-2
General Troubleshooting Information 14-4
DTC Troubleshooting Index 14-8
Symptom Troubleshooting Index 14-11
Component Location Index 14-23
System Description 14-24
DTC Troubleshooting 14-80
Road Test 14-172
Stall Speed Test 14-173
Pressure Test 14-174
Shift Solenoid Valve Test, Replacement, and Shift Solenoid Wire Harness Replacement 14-178
A/T Clutch Pressure Control Solenoid Valve A and B Test 14-182
A/T Clutch Pressure Control Solenoid Valve A and B Replacement 14-185
A/T Clutch Pressure Control Solenoid Valve C Test 14-187
A/T Clutch Pressure Control Solenoid Valve C Replacement 14-190
Input Shaft (Mainshaft) Speed Sensor Replacement 14-191
Output Shaft (Countershaft) Speed Sensor Replacement 14-192
2nd Clutch Transmission Fluid Pressure Switch Replacement 14-192
3rd Clutch Transmission Fluid Pressure Switch Replacement 14-193
4th Clutch Transmission Fluid Pressure Switch Replacement 14-193
ATF Temperature Sensor Replacement 14-194
ATF Level Check 14-195
ATF Replacement 14-196
Transfer Assembly Fluid Replacement 14-197
Transfer Assembly Inspection 14-198
Transfer Assembly Removal 14-199
Transfer Assembly Installation 14-200
Transmission Removal 14-201
Drive Plate Removal and Installation 14-214
Transmission Installation 14-214
ATF Cooler Cleaning 14-227
ATF Cooler Hose Replacement 14-229
ATF Cooler Replacement 14-230
Shift Lever Removal 14-230
Shift Lever Installation 14-232
Shift Lever Disassembly/Reassembly 14-233
Shift Lever Knob Replacement 14-234
Shift Lever Boot and A/T Gear Position Indicator Panel Replacement 14-234
Shift Cable Replacement 14-235
Shift Cable Adjustment 14-238
Transmission Disassembly 14-264
Transmission Reassembly 14-327

A/T Gear Position Indicator

Component Location Index 14-242
Circuit Diagram 14-243
Transmission Range Switch Test 14-244
Transmission Range Switch Replacement 14-245
* Paddle Shifter + (Upshift Switch) Circuit Troubleshooting 14-248
* Paddle Shifter Illumination Circuit Troubleshooting 14-252
* Paddle Shifter + (Upshift Switch) or Paddle Shifter − (Downshift Switch) Replacement 14-254
* Paddle Shifter − (Downshift Switch) Circuit Troubleshooting 14-250

A/T Interlock System

Component Location Index 14-255
Circuit Diagram 14-256
Shift Lock System Circuit Troubleshooting 14-257
Shift Lock Solenoid Test 14-261
Shift Lock Solenoid Replacement 14-261
Shift Lock Stop, Shift Lock Stop Cushion Replacement 14-262
Shift Lock Release Replacement 14-263
Park Pin Switch Replacement 14-263

Transmission Housing

Reverse Idler Gear Removal/Installation 14-270
Reverse Idler Gear Disassembly/Inspection/Reassembly 14-270
Secondary Shaft ATF Feed Pipe Cap Removal 14-271
Secondary Shaft ATF Feed Pipe Cap Installation 14-271
Secondary Shaft ATF Feed Pipe Cap, Feed Pipe Replacement 14-272
ATF Filter Removal/Inspection/Installation 14-272
Mainshaft Bearing Removal 14-273
Mainshaft Bearing Installation 14-273
Intermediary Shaft Bearing Replacement 14-274
Park Lever Shaft Bearing Replacement 14-274
Selector Control Shaft Bearing Replacement 14-275
Selector Control Shaft Oil Seal Replacement 14-275

Valve Body

Valve Body Repair 14-276
Valve Body Valve Installation 14-277
Main Valve Body Disassembly, Inspection, and Reassembly 14-278
ATF Pump Inspection 14-279
Secondary Valve Body Disassembly, Inspection, and Reassembly 14-280
Regulator Valve Body Disassembly, Inspection, and Reassembly 14-281
Accumulator Body Disassembly, Inspection, and Reassembly 14-282
Shift Solenoid Valve Removal and Installation 14-283

Torque Converter Housing

Mainshaft Bearing and Oil Seal Replacement 14-284
Countershaft Bearing Replacement 14-285
Secondary Shaft Bearing Replacement 14-286
Intermediary Shaft Bearing Replacement 14-288
Park Lever Shaft Bearing Replacement 14-289

Shafts and Clutches

Mainshaft Disassembly, Inspection, and Reassembly 14-290
Mainshaft 4th Gear Replacement 14-291
Countershaft Disassembly 14-292
Countershaft Idler Gear and 4th Gear Axial Clearance Inspection 14-294
Countershaft Reassembly 14-296
Secondary Shaft Disassembly 14-298
Secondary Shaft 1st Gear Axial Clearance Inspection 14-300
1st Gear One-way Clutch Inspection 14-302
1st Clutch Hub Replacement 14-302
Secondary Shaft Reassembly 14-303
Secondary Shaft Installation Height Inspection/Adjustment 14-306
Intermediary Shaft Disassembly, Inspection, and Reassembly 14-307
Intermediary Shaft 4th Gear Removal 14-308
Intermediary Shaft 4th Gear Installation 14-309
Intermediary Shaft 3rd Gear Axial Clearance Inspection 14-309
Intermediary Shaft Installation Height Inspection/Adjustment 14-311
Clutch Disassembly 14-312
Clutch Inspection 14-316
Clutch Wave-plate Phase Difference Inspection 14-317
Clutch Clearance Inspection 14-318
Clutch Reassembly 14-322

A/T Differential

Component Location Index 14-338
Backlash Inspection 14-338
Differential Carrier, Final Driven Gear, and Transfer Drive Gear Replacement 14-339
Carrier Bearing Replacement 14-339
Oil Seal Replacement 14-340
Carrier Bearing Outer Race Replacement 14-341
Carrier Bearing Preload Inspection 14-342

Transfer Output Shaft

Component Location Index 14-345
Transfer Output Shaft Bearing Replacement 14-345
Oil Seal Replacement 14-346
Transmission Housing Bearing Replacement 14-347
Transfer Output Shaft Installation Height Inspection/Adjustment 14-348

Transfer Assembly

Inspection 14-349
Disassembly 14-350
Transfer Hypoid Drive Gear Bearing Replacement 14-353
Transfer Output Shaft (Hypoid Gear) Bearing Removal/Installation 14-353
Transfer Housing Tapered Roller Bearing Outer Race Replacement 14-354
Transfer Cover Tapered Roller Bearing Outer Race Removal/Installation 14-355
Transfer Cover Oil Seal Replacement 14-356
Reassembly 14-357

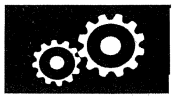

Special Tools

Ref. No.	Tool Number	Description	Qty
①	07GAB-PF50101 or 07GAB-PF50100	Mainshaft Holder	1
②	07GAD-PG40100	Oil Seal Driver Attachment	1
③	07GAD-SD40101	Attachment, 78 x 90 mm	1
④	07HAD-SG00100	Attachment, 83 mm	1
⑤	07JAD-PH80101	Oil Seal Driver Attachment	1
⑥	07JAD-SH30100	Attachment, 65 mm	1
⑦	07LAD-PW50601	Attachment, 40 x 50 mm	1
⑧	07LAE-PX40000	Clutch Spring Compressor Set	1
⑨	07MAD-PR90100	Attachment, 45 x 55 mm	1
⑩	07MAF-SP0011A	Tapered Bearing Race Installer A	1
⑪	07MAF-SP0013A	Installer Shaft	1
⑫	07MAJ-PY4011A	A/T Pressure Hose, 2,210 mm	3
⑬	07MAJ-PY40120	A/T Pressure Hose Adapter	3
⑭	07NAD-PX40100	Attachment, 78 x 80 mm	1
⑮	07SAZ-001000A	Backprobe Set	2
⑯	07XAA-002010A	Wrench, 40 x 42 mm	1
⑰	07XAB-0010101	Companion Flange Holder	1
⑱	07ZAE-PRP0100	Clutch Compressor Attachment	1
⑲	070AG-SJAA10S	Subframe Alignment Pin	1
⑳	070AJ-0020101	Preload Inspection Tool	1

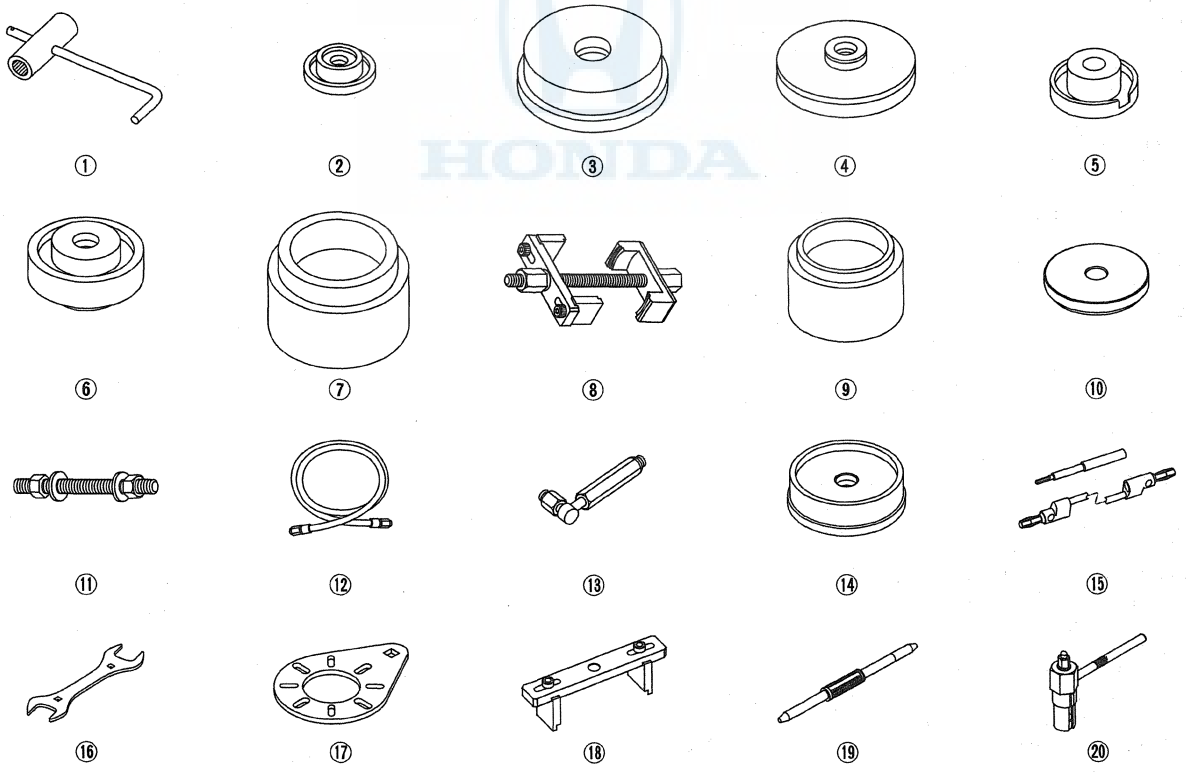

Ref. No.	Tool Number	Description	Qty
㉑	07406-0020400 or 07406-0020401	A/T Pressure Gauge Set	1
㉒	07736-A01000B or 07736-A01000A	Adjustable Bearing Puller, 25—40 mm	1
㉓	07741-0010201	Sliding Hammer Weight	1
㉔	07746-0010200	Attachment, 37 x 40 mm	1
㉕	07746-0010300	Attachment, 42 x 47 mm	1
㉖	07746-0010400	Attachment, 52 x 55 mm	1
㉗	07746-0010500	Attachment, 62 x 68 mm	1
㉘	07746-0010600	Attachment, 72 x 75 mm	1
㉙	07746-0010800	Attachment, 22 x 24 mm	1
㉚	07746-0030100	Driver, 40 mm I.D.	1
㉛	07746-0030300	Attachment, 30 mm I.D.	1
㉜	07749-0010000	Driver	1
㉝	07936-1660101	Bearing Remover Shaft Set, 12 mm	1
㉞	07936-3710100	Bearing Remover Shaft Handle	1
㉟	07936-3710600	Bearing Remover Shaft Set, 20 mm	1
㊱	07936-8890300	Bearing Remover Shaft Set, 30 mm	1
㊲	07936-GE00100	Bearing Remover Shaft, 10 mm	1
㊳	07936-GE00200	Bearing Remover Head, 10 mm	1
㊴	07947-6340500	Driver Attachment	1

07736-A01000B or 07736-A01000A must be used with commercially available 3/8 "-16 slide hammer.

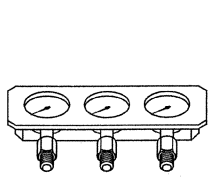

㉑

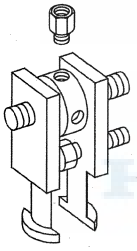

㉒

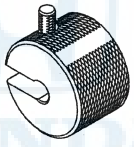

㉓

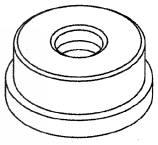

㉔㉕㉖㉗㉘㉙

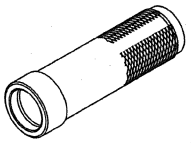

㉚



㉛

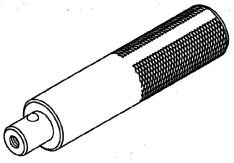

㉜

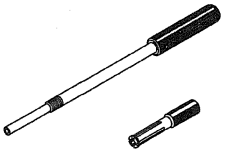

㉝

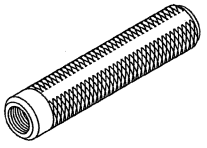

㉞

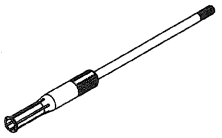

㉟

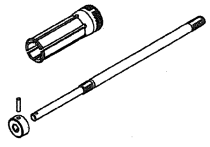

㊱

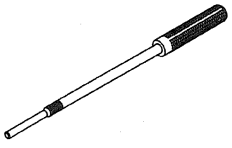

㊲

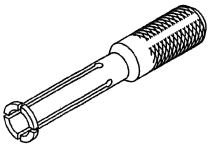

㊳

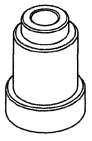

㊴

General Troubleshooting Information

How to Check for DTCs with the Honda Diagnostic System (HDS)

When the powertrain control module (PCM) senses an abnormality in the input or output system, the D indicator (A) in the gauge control module (B) will usually blink.

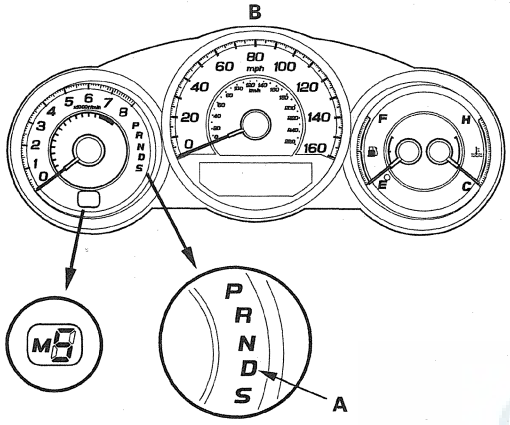

When the Honda Diagnostic System (HDS) is connected to the data link connector (DLC) (A) located under the left side of the dash, it will indicate the diagnostic trouble code (DTC) when the ignition switch is turned to ON (II) and the appropriate menu is selected.

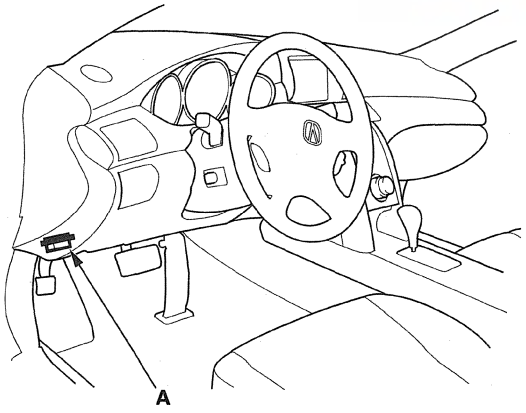

If the D indicator or the malfunction indicator lamp (MIL) has been reported on, or if a driveability problem is suspected, follow this procedure:

1. Connect the HDS to the DLC. (See the HDS user's manual for specific instructions.)
2. Turn the ignition switch to ON (II). Make sure the HDS communicates with the PCM. If it does not, go to the DLC circuit troubleshooting (see page 11-211).
3. Check for Pending of Confirmed DTCs with the HDS.
4. Record the freeze data and on-board snapshots for all fuel and emissions DTC, and A/T DTCs.
5. If there is a fuel and emissions DTC, first check the fuel and emissions system as indicated by the DTC (except for DTC P0700, which means there is one or more A/T DTCs, and no problems were detected in the fuel and emissions circuit of the PCM).
6. Clear the DTC and data.
7. Drive the vehicle for several minutes under the same conditions as those indicated by the freeze data, and then recheck for a DTC. If the A/T DTC returns, go to the indicated DTC's troubleshooting. If the DTC does not return, there was an intermittent problem within the circuit. Make sure all pins and terminals in the circuit are tight.

Symptom Troubleshooting Versus DTC Troubleshooting

Some symptoms will not set DTCs or cause the D indicator to blink. If the MIL was reported ON or the D indicator has been blinking, check for DTCs. If the vehicle has an abnormal symptom, and there are no DTCs stored, do the symptom troubleshooting. Check the list of probable cause(s) for the symptom, in the sequence listed, until you find the problem.

How to Check for DTCs with the SCS Mode (retrieving the flash codes)

NOTE: The preferred method is to use the HDS to retrieve the P-code.

When the PCM senses an abnormality in the input or output system, the D indicator (A) in the gauge control module (B) will usually blink.

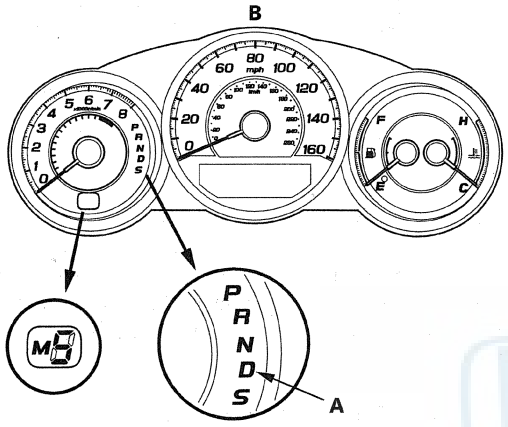

When the D indicator has been reported on, connect the HDS to the DLC (A) located under the left side of the dash. Turn the ignition switch to ON (II), select SCS mode, then the D indicator will indicate (blink) the DTC.

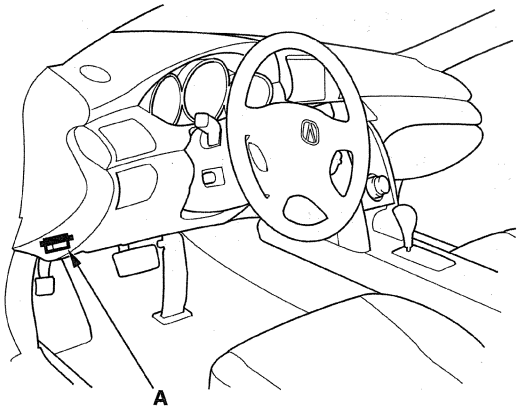

If the D indicator and the MIL come on at the same time, or if a driveability problem is suspected, follow this procedure:

1. Connect the HDS to the DLC. (See the HDS user's manual for specific instructions.)

2. Turn the ignition switch to ON (II). Make sure the HDS communicates with the PCM. If it does not, go to the DLC circuit troubleshooting (see page 11-211).

3. Select SCS mode, then observe the D indicator in the gauge control module. Codes 1 through 9 are indicated by individual short blinks. Code 10 and above are indicated by a series of long and short blinks. One long blink equals 10 short blinks. Add the long and short blinks together to determine the code.

Example: DTC P0705 (5)

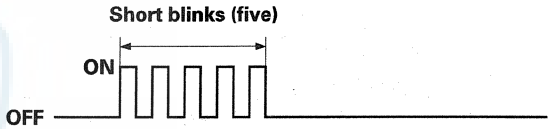

Example: DTC P0717 (15)

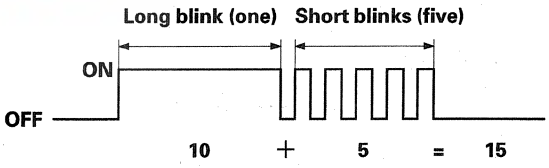

4. Record all fuel and emissions DTCs and A/T DTCs.

5. If there is a fuel and emissions DTC, first check the fuel and emissions system as indicated by the DTC (except DTC 70, which means there is one or more A/T DTCs, and no problems were detected in the fuel and emissions circuit of the PCM).

6. Clear the DTC and data.

7. Drive the vehicle for several minutes under the same conditions as those indicated by the freeze data, and then recheck for DTC. If the A/T DTC returns, go to the indicated DTC's troubleshooting. If the DTC does not return, there was an intermittent problem within the circuit. Make sure all pins and terminals in the circuit are tight.

(cont'd)

General Troubleshooting Information (cont'd)

How to Troubleshoot Circuits at the PCM

Special Tools Required
Backprobe set 07SAZ-001000A (two required)

1. Pull back the carpet, and remove the passenger's front console cover and the rear vent duct (see step 6 on page 20-93).
2. Inspect the circuit on the PCM, according to the DTC troubleshooting, with the special tools and a digital multimeter.
3. Connect the backprobe adapters (A) to the stacking patch cords (B), and connect the cords to a multimeter (C).

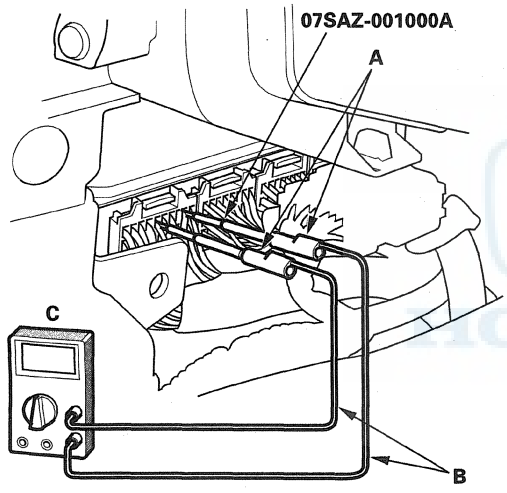

4. Using the wire insulation as a guide for the contoured tip of the backprobe adapter, gently slide the tip into the connector from the wire side until it touches the end of the wire terminal.
5. If you cannot get to the wire side of the connector or the wire side is sealed, disconnect the connector and use the tester probe to probe the connectors from the terminal side. Do not force the probe into the connector.

How to Clear A/T DTCs

1. Connect the HDS to the DLC (A).

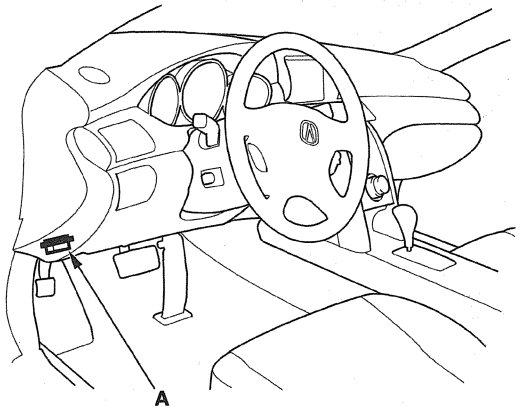

2. Turn the ignition switch to ON (II). Make sure the HDS communicates with the PCM. If it does not, go to the DLC circuit troubleshooting (see page 11-211).
3. Clear the DTC(s) on the HDS screen.

OBD Status

The OBD Status shows the current system status of each DTC and all of the parameters. This function is used to see if the repair was successfully completed. The results of diagnostic tests for the DTC are displayed as:

- PASSED: The on-board diagnosis is successfully finished.
- FAILED: The on-board diagnosis has finished but failed.
- NOT COMPLETED: The on-board diagnosis was running but is out of the enable conditions of the DTC.

PCM/TCM Reset

NOTE: To reset the PCM/TCM, initialize only the automatic transmission memory stored in the PCM or TCM.

1. Select the A/T system with the HDS.
2. Reset the TCM with the HDS while the engine is stopped.
3. Turn the ignition switch to LOCK (0).
4. Turn the ignition switch to ON (II), and wait for 30 seconds.
5. Turn the ignition switch to LOCK (0), and disconnect the HDS from the DLC.

Replacing the PCM
Refer to the PCM replacement (see page 11-232) when replacing the PCM is needed in the DTC troubleshooting.

Updating the A/T Software in the PCM
Refer to the PCM update (see page 11-230) when the A/T software updating is needed in the DTC troubleshooting.

Substituting the PCM

Refer to the PCM substituting (see page 11-7) when substituting a known-good PCM is needed in the DTC troubleshooting.

How to End a Troubleshooting Session (required after any troubleshooting)

NOTE: Reset the PCM/TCM with the HDS while the engine is stopped.

1. Turn the ignition switch to LOCK (0).
2. Turn the ignition switch to ON (II), and wait for 30 seconds.
3. Turn the ignition switch to LOCK (0), and disconnect the HDS from the DLC.
4. Start the engine in P or N, and warm it to normal operating temperature (the radiator fan comes on).
5. To verify that the problem is repaired, test-drive the vehicle for several minutes at speeds over 30 mph (50 km/h) or under the same conditions as those indicated by the freeze data.

DTC Troubleshooting Index

NOTE: Record all freeze data and any on-board snapshot, and review the General Troubleshooting Information (see page 14-4) before you troubleshoot.

DTC *(1)	Two Drive Cycle Detection	D Indicator	MIL	Detection Item	Page
P0705 (5) *(2)	———	Blinks	ON	Transmission Range Switch (Multiple Shift-position Input)	(see page 14-80)
P0706 (6) *(2)	○	OFF	ON	Transmission Range Switch (Open)	(see page 14-81)
P0711 (28) *(2)	○	Blinks	OFF	ATF Temperature Sensor (Range/ Performance)	(see page 14-82)
P0712 (28) *(2)	○	Blinks	OFF	ATF Temperature Sensor (Short)	(see page 14-84)
P0713 (28) *(2)	○	Blinks	OFF	ATF Temperature Sensor (Open)	(see page 14-86)
P0716 (15) *(2)	———	Blinks	ON	Problem in Input Shaft (Mainshaft) Speed Sensor Circuit	(see page 14-89)
P0717 (15) *(2)	———	Blinks	ON	Input Shaft (Mainshaft) Speed Sensor (No Signal Input)	(see page 14-90)
P0718 (15) *(2)	○	Blinks	ON	Input Shaft (Mainshaft) Speed Sensor (Intermittent Failure)	(see page 14-90)
P0721 (9) *(2)	———	Blinks	ON	Problem in Output Shaft (Countershaft) Speed Sensor Circuit	(see page 14-89)
P0722 (9) *(2)	———	Blinks	ON	Output Shaft (Countershaft) Speed Sensor (No Signal Input)	(see page 14-92)
P0723 (9) *(2)	○	Blinks	ON	Output Shaft (Countershaft) Speed Sensor (Intermittent Failure)	(see page 14-92)
P0731 (64)	○	Blinks	OFF	1st Gear Incorrect Ratio	(see page 14-94)
P0732 (64)	○	Blinks	OFF	2nd Gear Incorrect Ratio	(see page 14-95)
P0733 (64)	○	Blinks	OFF	3rd Gear Incorrect Ratio	(see page 14-97)
P0734 (64)	○	Blinks	OFF	4th Gear Incorrect Ratio	(see page 14-98)
P0735 (64)	○	Blinks	OFF	5th Gear Incorrect Ratio	(see page 14-100)
P0741 (40)	○	OFF	ON	Torque Converter Clutch Circuit Performance or Stuck OFF	(see page 14-101)
P0746 (76)	○	Blinks	ON	A/T Clutch Pressure Control Solenoid Valve A Stuck OFF	(see page 14-102)
P0747 (76)	○	Blinks	ON	A/T Clutch Pressure Control Solenoid Valve A Stuck ON	(see page 14-102)
P0751 (70)	○	Blinks	ON	Shift Solenoid Valve A Stuck OFF	(see page 14-103)
P0752 (70)	○	Blinks	ON	Shift Solenoid Valve A Stuck ON	(see page 14-103)
P0756 (71)	○	Blinks	ON	Shift Solenoid Valve B Stuck OFF	(see page 14-104)
P0757 (71)	○	Blinks	ON	Shift Solenoid Valve B Stuck ON	(see page 14-104)
P0761 (72)	○	Blinks	ON	Shift Solenoid Valve C Stuck OFF	(see page 14-105)
P0762 (72)	○	Blinks	ON	Shift Solenoid Valve C Stuck ON	(see page 14-105)
P0766 (73)	○	Blinks	ON	Shift Solenoid Valve D Stuck OFF	(see page 14-106)
P0767 (73)	○	Blinks	ON	Shift Solenoid Valve D Stuck ON	(see page 14-106)

DTC *(1)	Two Drive Cycle Detection	D Indicator	MIL	Detection Item	Page
P0776 (77)	○	Blinks	ON	A/T Clutch Pressure Control Solenoid Valve B Stuck OFF	(see page 14-107)
P0777 (77)	○	Blinks	ON	A/T Clutch Pressure Control Solenoid Valve B Stuck ON	(see page 14-107)
P0796 (78)	○	Blinks	ON	A/T Clutch Pressure Control Solenoid Valve C Stuck OFF	(see page 14-108)
P0797 (78)	○	Blinks	ON	A/T Clutch Pressure Control Solenoid Valve C Stuck ON	(see page 14-109)
P0812 (65) *(2)	○	Blinks	ON	Transmission Range Switch ATP R Switch (Open)	(see page 14-110)
P0842 (25) *(2)	———	Blinks	ON	2nd Clutch Transmission Fluid Pressure Switch (Short or Stuck ON)	(see page 14-113)
P0843 (25)	———	Blinks	ON	2nd Clutch Transmission Fluid Pressure Switch (Open or Stuck OFF)	(see page 14-115)
P0847 (26) *(2)	———	Blinks	ON	3rd Clutch Transmission Fluid Pressure Switch (Short or Stuck ON)	(see page 14-118)
P0848 (26)	———	Blinks	ON	3rd Clutch Transmission Fluid Pressure Switch (Open or Stuck OFF)	(see page 14-120)
P0872 (27) *(2)	———	Blinks	OFF	4th Clutch Transmission Fluid Pressure Switch (Short or Stuck ON)	(see page 14-123)
P0873 (27)	———	Blinks	OFF	4th Clutch Transmission Fluid Pressure Switch (Open or Stuck OFF)	(see page 14-125)
P0962 (16) *(2)	———	Blinks	ON	A/T Clutch Pressure Control Solenoid Valve A (Open)	(see page 14-128)
P0963 (16) *(2)	———	Blinks	ON	A/T Clutch Pressure Control Solenoid Valve A (Short)	(see page 14-131)
P0966 (23) *(2)	———	Blinks	ON	A/T Clutch Pressure Control Solenoid Valve B (Open)	(see page 14-133)
P0967 (23) *(2)	———	Blinks	ON	A/T Clutch Pressure Control Solenoid Valve B (Short)	(see page 14-137)
P0970 (29) *(2)	———	Blinks	ON	A/T Clutch Pressure Control Solenoid Valve C (Open)	(see page 14-139)
P0971 (29) *(2)	———	Blinks	ON	A/T Clutch Pressure Control Solenoid Valve C (Short)	(see page 14-142)
P0973 (7) *(2)	———	Blinks	ON	Shift Solenoid Valve A (Short)	(see page 14-144)
P0974 (7) *(2)	———	Blinks	ON	Shift Solenoid Valve A (Open)	(see page 14-147)
P0976 (8) *(2)	———	Blinks	ON	Shift Solenoid Valve B (Short)	(see page 14-150)
P0977 (8) *(2)	———	Blinks	ON	Shift Solenoid Valve B (Open)	(see page 14-152)
P0979 (22) *(2)	———	Blinks	ON	Shift Solenoid Valve C (Short)	(see page 14-155)
P0980 (22) *(2)	———	Blinks	ON	Shift Solenoid Valve C (Open)	(see page 14-157)

NOTE:

* (1): The DTC in parentheses is the flash code the D indicator indicates when the data link connector (DLC) is connected to the HDS, and in the SCS mode.
* (2): This code is caused by an electrical circuit problem and cannot be caused by a mechanical problem in the transmission.

(cont'd)

DTC Troubleshooting Index (cont'd)

NOTE: Record all freeze data and any on-board snapshot, and review the General Troubleshooting Information (see page 14-4) before you troubleshoot.

DTC *(1)	Two Drive Cycle Detection	D Indicator	MIL	Detection Item	Page
P0982 (60) *(2)	———	Blinks	ON	Shift Solenoid Valve D (Short)	(see page 14-160)
P0983 (60) *(2)	———	Blinks	ON	Shift Solenoid Valve D (Open)	(see page 14-163)
P1717 (62)	———	Blinks	ON	Transmission Range Switch ATP RVS Switch (Open)	(see page 14-165)
P1743 (45)	○	Blinks	OFF	Shift Error	(see page 14-168)
P1744 (45)	○	Blinks	OFF	Shift Error	(see page 14-169)
P1745 (45)	○	Blinks	OFF	Shift Error	(see page 14-170)
P1780 (49)	○	Blinks	ON	Shift Control System (Transmission Default Mode)	(see page 14-171)

NOTE:
* (1): The DTC in parentheses is the flash code the D indicator indicates when the data link connector (DLC) is connected to the HDS, and in the SCS mode.
* (2): This code is caused by an electrical circuit problem and cannot be caused by a mechanical problem in the transmission.

Symptom Troubleshooting Index

NOTE: Check for DTCs with the HDS and troubleshoot those frist before following the repair procedures listed in the index.

Symptom	Probable cause(s)	Notes
HDS does not communicate with the PCM	DLC circuit	Troubleshoot the DLC circuit (see page 11-211).
When you turn the ignition switch to ON (II), the D indicator comes on and stays on in all shift lever positions, or it never comes on at all	• F-CAN communication line error • Gauge control module defective • PCM defective	• Check the F-CAN communication line for a DTC (see page 22-409). • Check the F-CAN communication line by using the gauge control module self-diagnostic function (see page 22-396). • Check the indicator drive circuit in the gauge control module by using the gauge control module self-diagnostic function (see page 22-397).
A/T gear position indicator does not come on while the shift lever is in that position; shift indicator does not work	• F-CAN communication line error • Gauge control module defective • PCM defective • Transmission range switch defective	• Check the F-CAN communication line for a DTC (see page 22-409). • Check the F-CAN communication line by using the gauge control module self-diagnostic function (see page 22-396). • Check the indicator drive circuit in the gauge control module by using the gauge control module self-diagnostic function (see page 22-397). • Inspect the transmission range switch (see page 14-244).
Speedometer does not work	• F-CAN communication line error • Gauge control module defective • PCM defective • Output shaft (countershaft) speed sensor defective	• Check the F-CAN communication line for a DTC (see page 22-409). • Check the F-CAN communication line by using the gauge control module self-diagnostic function (see page 22-396). • Check the speedometer drive circuit in the gauge control module using the HDS. • Inspect the transmission range switch (see page 14-244). • Check for a stored DTC, and check for loose connections. • Check the speed sensor installation. • Inspect the sensor O-ring for wear and damage.
When you press the paddle shifter + (upshift switch) in D and S, the transmission does not upshift	A problem in the paddle shifter + (upshift switch) circuit	Check the paddle shifter + (upshift switch) circuit (see page 14-248).
When you press the paddle shifter − (downshift switch) in D and S, the transmission does not downshift	A problem in the paddle shifter − (downshift switch) circuit	Check the paddle shifter − (downshift switch) circuit (see page 14-250).

(cont'd)

Symptom Troubleshooting Index (cont'd)

Symptom	Probable cause(s)	Notes
M indicator does not come on even when the paddle shifter + (upshift switch) or paddle shifter — (downshift switch) is operated in sequential sportshift mode	• F-CAN communication line error • Gauge control module defective • PCM defective	• Check the F-CAN communication line for a DTC (see page 22-409). • Check the F-CAN communication line by using the gauge control module self-diagnostic function (see page 22-396). • Check the indicator drive circuit in the gauge control module by using the gauge control module self-diagnostic function (see page 22-397).
The paddle shifter + (upshift switch) illumination does not come on when the combination light switch is turned on while the ignition switch is ON (II)	Paddle shifter + (upshift switch) illumination circuit	Check the paddle shifter + (upshift switch) illumination circuit (see page 14-252).
The paddle shifter — (downshift switch) illumination does not come on when the combination light switch is turned on while the ignition switch is ON (II)	Paddle shifter — (downshift switch) illumination circuit	Check the paddle shifter — (downshift switch) illumination circuit (see page 14-252).
Shift lever cannot be moved from P while pressing on the brake pedal	• Accelerator pedal position sensor circuit • Accelerator pedal position sensor defective • Brake pedal position switch circuit • Brake pedal position switch defective • Shift lock solenoid defective • Shift lock solenoid control circuit • Shift lock mechanism defective • Throttle body defective • Transmission range switch ATPP switch stuck OFF • Transmission range switch ATPP switch circuit open • PCM defective	• Inspect the APP sensor signal (see page 11-281). • Troubleshoot the shift lock system circuit (see page 14-257). • Test the shift lock solenoid (see page 14-261). • Inspect the transmission range switch (see page 14-244).
Ignition switch cannot be moved from ACCESSORY (I) to LOCK (0) (key is pushed in, the shift lever in P)	A problem in the key interlock system of the interlock system	Check the interlock system - key interlock system circuit (see page 22-98).

Symptom	Probable cause(s)	Notes
Engine runs, but vehicle does not move in any gear	• Low ATF level • Shift cable broken or out of adjustment • Connection between shift cable and transmission or body is worn • ATF pump worn or binding • Regulator valve stuck or spring worn • ATF strainer clogged • Mainshaft worn or damaged • Final gears worn or damaged • Park mechanism defective • Transmission-to-engine assembly error • Axle disengaged	• Check the ATF level and check the ATF cooler lines for leaks and loose connections. If necessary, clean the ATF cooler lines. • Check for a loose shift cable at the shift lever and the selector control lever. • Improper alignment of the ATF pump and the torque converter housing may cause the ATF pump seizure. The symptoms are mostly an rpm-related ticking noise or a high pitched squeak. • Check the line pressure (see page 14-174). • Check the ATF strainer for debris. If the strainer is clogged, find the damaged components that caused the debris. • Inspect the differential pinion gears for wear. If the differential pinion gears are worn, replace the differential assembly, replace the ATF strainer, thoroughly clean the transmission, and clean the cooler and lines. Replace the torque converter. • Be careful not to damage the torque converter housing when replacing the main ball bearing. You may also damage the ATF pump when you torque down the main valve body. This will result in ATF pump seizure if not detected. Use the proper tools. • Install the main seal flush with the torque converter housing. If you push it into the torque converter housing until it bottoms out, it will block the fluid return passage and result in damage.

(cont'd)

Symptom Troubleshooting Index (cont'd)

Symptom	Probable cause(s)	Notes
Vehicle moves in R, but not in D, or 1st in S	• 1st accumulator defective • Idler gears worn or damaged • 1st clutch defective	• Check the 1st clutch pressure (see page 14-174). • Inspect the secondary shaft and 1st/1st-hold clutch assembly for wear and damage. • Inspect the clutch piston, the clutch piston check valve, and the O-rings. Check the spring retainer for wear and damage. Inspect the clearance between the clutch end-plate and the top disc. If the clearance is out of tolerance, inspect the clutch discs and the plates for wear and damage, and inspect the clutch wave-plate height. If the discs and the flat-plates are worn or damaged, replace the discs and the flat-plates as a set. If the wave-plate height is out of tolerance, replace the wave-plate. If the discs and the plates are OK, adjust the clearance with the clutch end-plate.
Vehicle moves in D and R, but not in 1st in S	• 1st-hold accumulator defective • 1st-hold clutch defective	• Check the 1st-hold clutch pressure (see page 14-174). • Inspect the secondary shaft and 1st/1st-hold clutch assembly for wear and damage. • Inspect the clutch piston, the clutch piston check valve, and the O-rings. Check the spring retainer for wear and damage. Inspect the clearance between the clutch end-plate and the top disc. If the clearance is out of tolerance, inspect the clutch discs and the plates for wear and damage, and inspect the clutch wave-plate height. If the discs and the flat-plates are worn or damaged, replace the discs and the flat-plates as a set. If the wave-plate height is out of tolerance, replace the wave-plate. If the discs and the plates are OK, adjust the clearance with the clutch end-plate.
Vehicle moves in D and R, but not in 2nd in S	• 2nd accumulator defective • 2nd clutch defective	• Check the 2nd clutch pressure (see page 14-174). • Inspect the secondary shaft and 2nd clutch assembly for wear and damage. • Inspect the clutch piston, the clutch piston check valve, and the O-rings. Check the spring retainer for wear and damage. Inspect the clearance between the clutch end-plate and the top disc. If the clearance is out of tolerance, inspect the clutch discs and the plates for wear and damage, and inspect the clutch wave-plate height. If the discs and the flat-plates are worn or damaged, replace the discs and the flat-plates as a set. If the wave-plate height is out of tolerance, replace the wave-plate. If the discs and the plates are OK, adjust the clearance with the clutch end-plate.

Symptom	Probable cause(s)	Notes
Vehicle moves in D and S, but not in R (or moves forward in R)	• Shift fork shaft stuck • Modulator valve defective • Reverse CPC valve defective • 5th accumulator defective • 5th clutch defective • Reverse gears worn or damaged	• Check the line pressure and 5th clutch pressure (see page 14-174). • Check for a missing shift fork bolt on the shift fork shaft. • Inspect the reverse selector gear teeth chamfers, and inspect the engagement teeth chamfers of the countershaft 5th gear and reverse gear. Replace the reverse gears and the reverse selector if they are worn or damaged. If the transmission makes clicking, grinding, or whirring noises, also replace the mainshaft 5th gear, reverse idler gear, and countershaft 5th gear. • Inspect the clutch piston, the clutch piston check valve, and the O-rings. Check the spring retainer for wear and damage. Inspect the clearance between the clutch end-plate and the top disc. If the clearance is out of tolerance, inspect the clutch discs and the plates for wear and damage, and inspect the clutch wave-plate height. If the discs and the flat-plates are worn or damaged, replace the discs and the flat-plates as a set. If the wave-plate height is out of tolerance, replace the wave-plate. If the discs and the plates are OK, adjust the clearance with the clutch end-plate.
Poor acceleration; flares when starting off in D, S, and R	• Low ATF level • Shift cable broken or out of adjustment • ATF pump worn or binding • Regulator valve stuck or spring worn • ATF strainer clogged • Torque converter check valve defective	• Check the ATF level and check the ATF cooler lines for leakage and loose connections. If necessary, clean the ATF cooler lines. • Check for a loose shift cable at the shift lever and the selector control lever. • Check the line pressure (see page 14-174). • Check the ATF strainer for debris. If the strainer is clogged, find the damaged components that caused the debris. • Improper alignment of the ATF pump and the torque converter housing may cause ATF pump seizure. The symptom is mostly an rpm-related ticking noise or a high pitched squeak.
Poor acceleration; flares when starting off in D, S, and R; stall speed high in D	• Low ATF level • 1st accumulator defective • 1st clutch defective	• Check the 1st clutch pressure (see page 14-174). • Inspect the clutch piston, the clutch piston check valve, and the O-rings. Check the spring retainer for wear and damage. Inspect the clearance between the clutch end-plate and the top disc. If the clearance is out of tolerance, inspect the clutch discs and the plates for wear and damage, and inspect the clutch wave-plate height. If the discs and the flat-plates are worn or damaged, replace the discs and the flat-plates as a set. If the wave-plate height is out of tolerance, replace the wave-plate. If the discs and the plates are OK, adjust the clearance with the clutch end-plate.

(cont'd)

Symptom Troubleshooting Index (cont'd)

Symptom	Probable cause(s)	Notes
Poor acceleration; flares when starting off in D, S, and R; stall speed high in R	• Low ATF level • Shift solenoid valve C defective • Shift cable broken or out of adjustment • Reverse CPC valve defective • 5th accumulator defective • 5th clutch defective	• Check for a stored DTC, and check for loose connectors. Inspect the O-ring, and check for a seized shift solenoid valve. • Check for a loose shift cable at the shift lever and the transmission control lever. • Check the 5th clutch pressure (see page 14-174). • Inspect the clutch piston, the clutch piston check valve, and the O-rings. Check the spring retainer for wear and damage. Inspect the clearance between the clutch end-plate and the top disc. If the clearance is out of tolerance, inspect the clutch discs and the plates for wear and damage, and inspect the clutch wave-plate height. If the discs and the flat-plates are worn or damaged, replace the discs and the flat-plates as a set. If the wave-plate height is out of tolerance, replace the wave-plate. If the discs and the plates are OK, adjust the clearance with the clutch end-plate.
Poor acceleration in D, S, and R; stall speed low; engine does not rev to high rpm; transmission does not upshift under hard acceleration	• Shift solenoid valve D defective • Torque converter one-way clutch defective • Engine output low • Torque converter clutch piston defective	• Check the stall speed (see page 14-173). • Check the engine control system. • Check the fuel pressure (see page 11-335). • Check for exhaust restriction. • Check for intake restriction. • Check the VTEC rocker arm. • Replace the torque converter.
Engine idle vibration; engine stalls, idles low or rough	• Worn engine or transmission mounts • Low ATF level • Shift solenoid valve D defective • Engine output low • Torque converter clutch piston defective • Lock-up control valve defective • Lock-up timing valve defective • A/T clutch pressure control solenoid valve C defective	• Check the engine and transmission mounts. • Check the ATF level and check the ATF cooler lines for leakage and loose connections. If necessary, clean the ATF cooler lines. • Check for a stored DTC, and check for loose connectors. Inspect the O-ring, and check for a seized shift solenoid valve. • Replace the torque converter. • Check the lock-up control valve in the regulator valve body for free movement, and check the valve spring for wear and damage. • Check the lock-up timing valve in the main valve body for free movement, and check the valve spring for wear and damage. • Inspect the shift solenoid valve D function with the HDS (see page 14-178). • Check for a seized shift solenoid valve, and inspect the O-rings. • Inspect the A/T clutch pressure control solenoid valve C with the HDS (see page 14-187).

Symptom	Probable cause(s)	Notes
Vehicle moves in N	• Excessive ATF • Foreign material in separator plate orifice • Relief valve defective • Lubrication control valve defective • 1st-hold clutch defective • 1st clutch defective • 2nd clutch defective • 3rd clutch defective • 4th clutch defective • 5th clutch defective • Clutch end-plate clearance incorrect • Needle bearing seized, worn, or damaged	• Check the ATF level, and drain the ATF if necessary. • Check all clutch pressures. • Inspect the clutch piston, the clutch piston check valve, and the O-rings. Check the spring retainer for wear and damage. Inspect the clearance between the clutch end-plate and the top disc. If the clearance is out of tolerance, inspect the clutch discs and the plates for wear and damage, and inspect the clutch wave-plate height. If the discs and the flat-plates are worn or damaged, replace the discs and the flat-plates as a set. If the wave-plate height is out of tolerance, replace the wave-plate. If the discs and the plates are OK, adjust the clearance with the clutch end-plate.
Delayed engagement after shifting from N to D or S, or excessive shock when shifting	• Worn engine or transmission mounts • Shift solenoid valve C defective • A/T clutch pressure control solenoid valve A defective • A/T clutch pressure control solenoid valve B defective • A/T clutch pressure control solenoid valve C defective • Shift cable broken or out of adjustment • Connection between shift cable and transmission or body is worn • Input shaft (mainshaft) speed sensor defective • Output shaft (countershaft) speed sensor defective • ATF temperature sensor defective • CPC valve A defective • CPC valve B defective • CPC valve C stuck • Foreign material in separator plate orifice • Shift valve C defective • Shift valve E defective • Servo control valve defective • 1st accumulator defective • 1st check ball stuck • One-way check ball stuck • 1st clutch defective	• Check the engine and transmission mounts. • Check for a stored DTC, and check for loose connectors. • Inspect the O-ring, and check for a seized shift solenoid valve. • Inspect the A/T clutch pressure control solenoid valve body gasket and the ATF feed pipes for wear and damage. If the A/T clutch pressure control solenoid valve is stuck, inspect the CPC valves. • Check for a loose shift cable at the shift lever and the selector control lever. • Inspect the ATF temperature sensor O-rings. • Check the 1st clutch pressure. • Inspect the clutch piston, the clutch piston check valve, and the O-rings. Check the spring retainer for wear and damage. Inspect the clearance between the clutch end-plate and the top disc. If the clearance is out of tolerance, inspect the clutch discs and the plates for wear and damage, and inspect the clutch wave-plate height. If the discs and the flat-plates are worn or damaged, replace the discs and the flat-plates as a set. If the wave-plate height is out of tolerance, replace the wave-plate. If the discs and the plates are OK, adjust the clearance with the clutch end-plate.

(cont'd)

Symptom Troubleshooting Index (cont'd)

Symptom	Probable cause(s)	Notes
Delayed engagement after shifting from N to R, or excessive shock when shifting	• Worn engine or transmission mounts • Shift solenoid valve C defective • A/T clutch pressure control solenoid valve B defective • A/T clutch pressure control solenoid valve C defective • Shift cable broken or out of adjustment • Connection between shift cable and transmission or body is worn • Input shaft (mainshaft) speed sensor defective • Output shaft (countershaft) speed sensor defective • ATF temperature sensor defective • Shift fork shaft stuck • CPC valve C stuck • Reverse CPC valve defective • Foreign material in separator plate orifice • Shift valve E defective • 5th accumulator defective • 5th clutch defective • Clearance between clutch end-plate and top disc incorrect	• Check the engine and transmission mounts. • Check for a stored DTC, and check for loose connectors. • Inspect the O-ring, and check for a seized shift solenoid valve. • Inspect the A/T clutch pressure control solenoid valve body gasket and ATF feed pipes for wear and damage. If the A/T clutch pressure control solenoid valve is stuck, inspect the CPC valves. • Check for a loose shift cable at the shift lever and the transmission control lever. • Inspect the sensor O-rings. • Check the 5th clutch pressure (see page 14-174). • Inspect the clutch piston, the clutch piston check valve, and the O-rings. Check the spring retainer for wear and damage. Inspect the clearance between the clutch end-plate and the top disc. If the clearance is out of tolerance, inspect the clutch discs and the plates for wear and damage, and inspect the clutch wave-plate height. If the discs and the flat-plates are worn or damaged, replace the discs and the flat-plates as a set. If the wave-plate height is out of tolerance, replace the wave-plate. If the discs and the plates are OK, adjust the clearance with the clutch end-plate.
Transmission does not shift	• Input shaft (mainshaft) speed sensor defective • Output shaft (countershaft) speed sensor defective • Modulator valve defective • Engine output low	• Check for a stored DTC, and check for loose connectors. • Inspect the sensor O-rings. • Check the line pressure (see page 14-174). • Check the fuel pressure (see page 11-335). • Check for exhaust restriction. • Check for intake restriction. • Check the VTEC rocker arm.
Erratic shifting: fails to shift in D and S; starts off in 5th	• Shift solenoid valve B defective • Shift valve B defective	• Check for a stored DTC, and check for loose connectors. • Inspect the O-ring, and check for a seized shift solenoid valve.
Erratic shifting: fails to shift in 2nd in S; starts off in 4th	• Shift solenoid valve B defective • Shift valve B defective	• Check for a stored DTC, and check for loose connectors. • Inspect the O-ring, and check for a seized shift solenoid valve.
Erratic shifting: fails to shift in D, S, and 1st in S; starts off in 3rd	• Shift solenoid valve A defective • Shift valve A defective	• Check for a stored DTC, and check for loose connectors. • Inspect the O-ring, and check for a seized shift solenoid valve.
Erratic shifting: fails to shift in 2nd in S; starts off in 1st	• Shift solenoid valve A defective • Shift valve A defective	• Check for a stored DTC, and check for loose connectors. • Inspect the O-ring, and check for a seized shift solenoid valve.

Symptom	Probable cause(s)	Notes
Excessive shock or flares on all upshifts and downshifts	• Worn engine or transmission mounts • A/T clutch pressure control solenoid valve A defective • Input shaft (mainshaft) speed sensor defective • Output shaft (countershaft) speed sensor defective • ATF temperature sensor defective • CPC valve A defective • Foreign material in separator plate orifice	• Check the engine and transmission mounts. • Check for a stored DTC, and check for loose connectors. • Inspect the A/T clutch pressure control solenoid valve body gasket and the ATF feed pipes for wear and damage. If the A/T clutch pressure control solenoid valve is stuck, inspect the CPC valves. • Inspect the sensor O-rings.
Excessive shock or flares on 1-2 upshift or 2-1 downshift	• Worn engine or transmission mounts • A/T clutch pressure control solenoid valve A defective • A/T clutch pressure control solenoid valve C defective • 2nd clutch transmission fluid pressure switch defective • CPC valve A defective • CPC valve C defective • Foreign material in separator plate orifice • 2nd accumulator defective • 2nd check ball stuck • 2nd clutch defective • Clearance between clutch end-plate and top disc incorrect	• Check the engine and transmission mounts. • Check for a stored DTC, and check for loose connectors. • Inspect the A/T clutch pressure control solenoid valve body gasket and the ATF feed pipes for wear and damage. If the A/T clutch pressure control solenoid valve is stuck, inspect the CPC valves. • Check for a clogged orifice in the transmission fluid pressure switch connector. If the orifice is clogged, remove it and clean the connector. • Check the 1st and 2nd clutch pressures (see page 14-174). • Inspect the clutch piston, the clutch piston check valve, and the O-rings. Check the spring retainer for wear and damage. Inspect the clearance between the clutch end-plate and the top disc. If the clearance is out of tolerance, inspect the clutch discs and the plates for wear and damage, and inspect the clutch wave-plate height. If the discs and the flat-plates are worn or damaged, replace the discs and the flat-plates as a set. If the wave-plate height is out of tolerance, replace the wave-plate. If the discs and the plates are OK, adjust the clearance with the clutch end-plate.

(cont'd)

Symptom Troubleshooting Index (cont'd)

Symptom	Probable cause(s)	Notes
Excessive shock or flares on 2-3 upshift or 3-2 downshift	• Worn engine or transmission mounts • Shift solenoid valve C defective • A/T clutch pressure control solenoid valve B defective • A/T clutch pressure control solenoid valve C defective • 3rd clutch transmission fluid pressure switch defective • CPC valve B defective • CPC valve C defective • Foreign material in separator plate orifice • Shift valve C defective • 2nd accumulator defective • 3rd accumulator defective • 2nd check ball stuck • 2nd clutch defective • 3rd clutch defective • Clearance between clutch end-plate and top disc incorrect	• Check the engine and transmission mounts. • Check for a stored DTC, and check for loose connectors. • Inspect the O-rings, and check for a seized shift solenoid valve. • Inspect the A/T clutch pressure control solenoid valve body gasket and the ATF feed pipes for wear and damage. If the A/T clutch pressure control solenoid valve is stuck, inspect the CPC valves. • Check for a clogged orifice in the transmission fluid pressure switch connector. If the orifice is clogged, remove it and clean the connector. • Check the 2nd and 3rd clutch pressures (see page 14-174). • Inspect the clutch piston, the clutch piston check valve, and the O-rings. Check the spring retainer for wear and damage. Inspect the clearance between the clutch end-plate and the top disc. If the clearance is out of tolerance, inspect the clutch discs and the plates for wear and damage, and inspect the clutch wave-plate height. If the discs and the flat-plates are worn or damaged, replace the discs and the flat-plates as a set. If the wave-plate height is out of tolerance, replace the wave-plate. If the discs and the plates are OK, adjust the clearance with the clutch end-plate.

Symptom	Probable cause(s)	Notes
Excessive shock or flares on 3-4 upshift or 4-3 downshift	• Worn engine or transmission mounts • Shift solenoid valve C defective • A/T clutch pressure control solenoid valve B defective • A/T clutch pressure control solenoid valve A defective • 4th clutch transmission fluid pressure switch defective • CPC valve A defective • CPC valve B defective • Foreign material in separator plate orifice • Shift valve C defective • 3rd accumulator defective • 4th accumulator defective • 3rd clutch defective • 4th clutch defective • Clearance between clutch end-plate and top disc incorrect	• Check the engine and transmission mounts. • Check for a stored DTC, and check for loose connectors. • Inspect the O-rings, and check for a seized shift solenoid valve. • Inspect the A/T clutch pressure control solenoid valve body gasket and the ATF feed pipes for wear and damage. If the A/T clutch pressure control solenoid valve is stuck, inspect the CPC valves. • Check for a clogged orifice in the transmission fluid pressure switch connector. If the orifice is clogged, remove it and clean the connector. • Check the 3rd and 4th clutch pressures (see page 14-174). • Inspect the clutch piston, the clutch piston check valve, and the O-rings. Check the spring retainer for wear and damage. Inspect the clearance between the clutch end-plate and the top disc. If the clearance is out of tolerance, inspect the clutch discs and the plates for wear and damage, and inspect the clutch wave-plate height. If the discs and the flat-plates are worn or damaged, replace the discs and the flat-plates as a set. If the wave-plate height is out of tolerance, replace the wave-plate. If the discs and the plates are OK, adjust the clearance with the clutch end-plate.
Excessive shock or flares on 4-5 upshift or 5-4 downshift	• Shift solenoid valve C defective • A/T clutch pressure control solenoid valve B defective • A/T clutch pressure control solenoid valve C defective • CPC valve B defective • CPC valve C defective • Foreign material in separator plate orifice • Shift valve C defective • Shift valve E defective • Kick-down valve or kick-down short valve defective • 4th accumulator defective • 5th accumulator defective • 4th clutch defective • 5th clutch defective • Clearance between clutch end-plate and top disc incorrect	• Check for a stored DTC, and check for loose connectors. • Inspect the O-rings, and check for a seized shift solenoid valve. • Inspect the A/T clutch pressure control solenoid valve body gasket and ATF feed pipes for wear and damage. If the A/T clutch pressure control solenoid valve is stuck, inspect the CPC valves. • Check the 4th and 5th clutch pressures (see page 14-174). • Inspect the clutch piston, the clutch piston check valve, and the O-rings. Check the spring retainer for wear and damage. Inspect the clearance between the clutch end-plate and the top disc. If the clearance is out of tolerance, inspect the clutch discs and the plates for wear and damage, and inspect the clutch wave-plate height. If the discs and the flat-plates are worn or damaged, replace the discs and the flat-plates as a set. If the wave-plate height is out of tolerance, replace the wave-plate. If the discs and the plates are OK, adjust the clearance with the clutch end-plate.

(cont'd)

Symptom Troubleshooting Index (cont'd)

Symptom	Probable cause(s)	Notes
Noise from transmission in all shift lever positions	• ATF pump worn or binding • Idler gears worn or damaged • Thrust washer seized up, worn, or damaged	Improper alignment of the ATF pump and the torque converter housing may cause the ATF pump seizure. The symptoms are mostly an rpm-related ticking noise or a high pitched squeak.
Vehicle does not accelerate above 31 mph (50 km/h)	Torque converter one-way clutch defective	Replace torque converter.
Vibration in all shift lever positions	Drive plate defective or transmission misassembled	• Check for a misinstalled/damaged drive plate. • Adjust the engine and transmission mounts. • Check the stall speed.
Shift lever does not operate smoothly	• Transmission range switch defective or out of adjustment • Shift cable broken or out of adjustment • Connection between shift cable and transmission or body is worn	• Check for a stored DTC, and check for loose connectors. • Inspect the transmission range switch. If the transmission range switch is faulty, replace it. If the transmission range switch is out of adjustment, adjust it and the shift cable. • Check for a loose shift cable at the shift lever and the transmission control lever.
Transmission does not shift into P	• Shift cable broken or out of adjustment • Connection between shift cable and transmission or body is worn • Park mechanism defective	• Check for a loose shift cable at the shift lever and the transmission control lever. • Check the park pawl, the control shaft, and the park lever link for wear and damage. Check if the control shaft lever pin is disengaged from the manual valve guide.
Torque converter clutch does not operate smoothly; torque converter clutch does not engage or disengage	• Shift solenoid valve D defective • A/T clutch pressure control solenoid valve C defective • Torque converter clutch piston defective • Torque converter check valve defective • Lock-up shift valve defective • Lock-up control valve defective • Lock-up timing valve defective	• Check for a stored DTC, and check for loose connectors. • Inspect the O-rings, and check for a seized shift solenoid valve. • Inspect the A/T clutch pressure control solenoid valve C body gasket for wear and damage. If the A/T clutch pressure control solenoid valve C is stuck, inspect the CPC valves. • Center all engine mounts. • Replace the torque converter.
A/T gear position indicator does not indicate shift lever positions	• Transmission range switch defective or out of adjustment • Shift cable broken or out of adjustment • Connection between shift cable and transmission or body is worn	• Check for a stored DTC, and check for loose connectors. • Inspect the transmission range switch. If the transmission range switch is faulty, replace it. If the transmission range switch is out of adjustment, adjust it and the shift cable. • Check for a loose shift cable at the shift lever and the transmission control lever.

Component Location Index

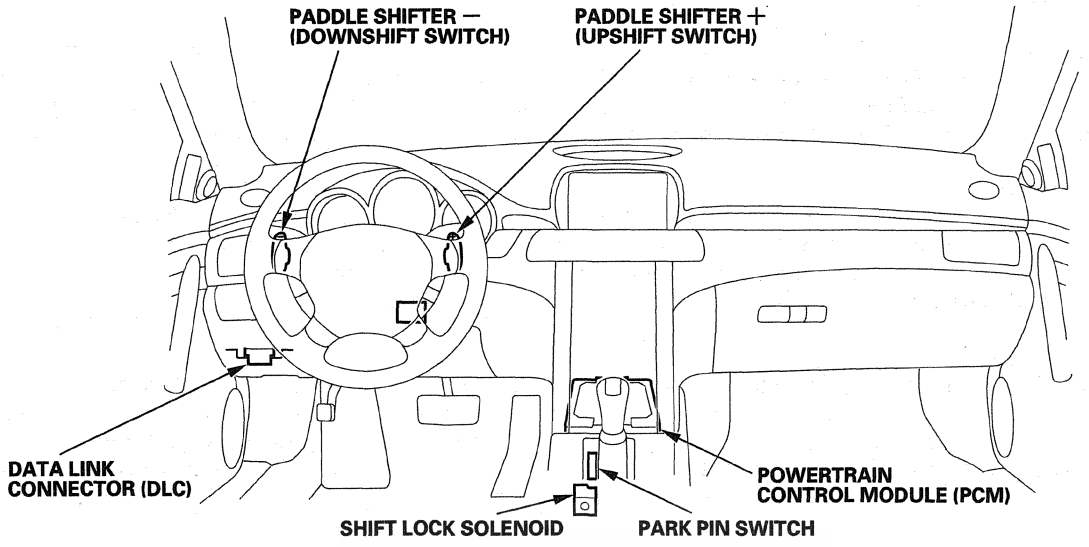

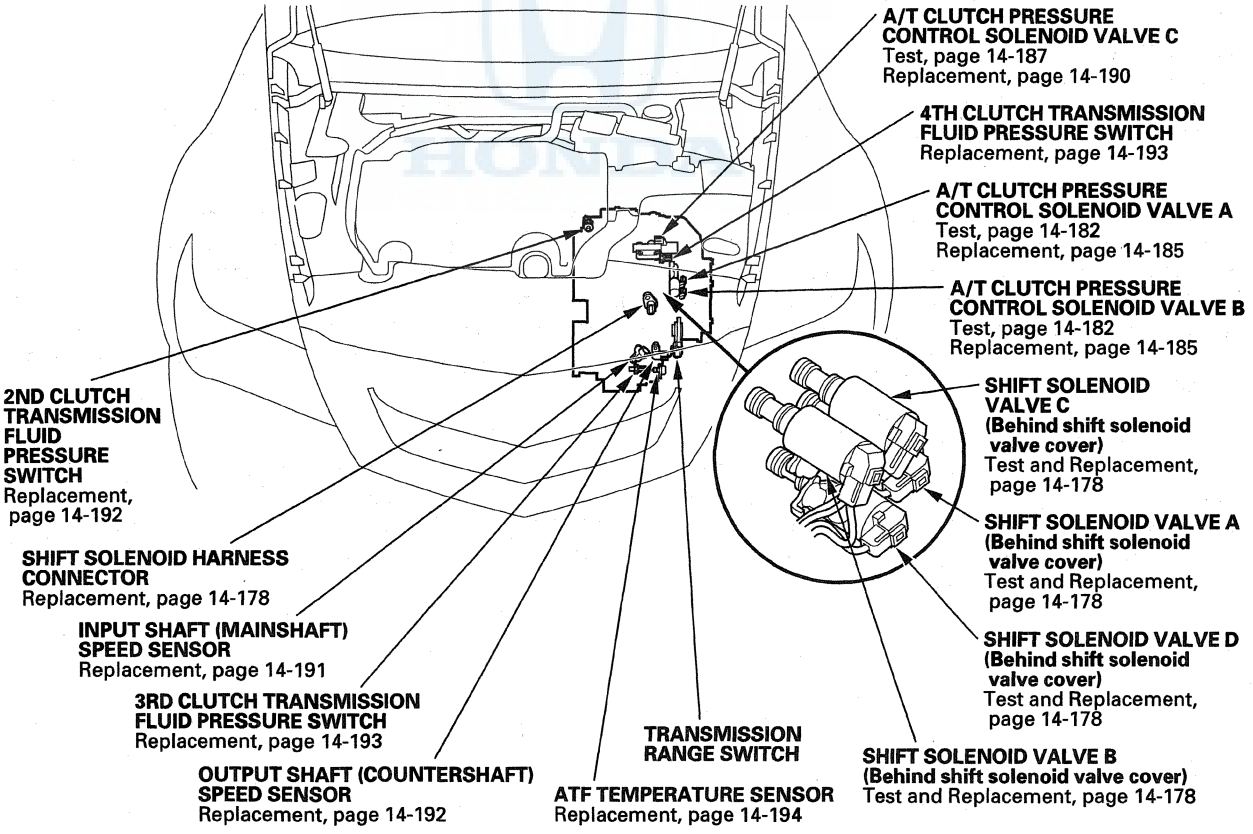

System Description

General description

The automatic transmission is a transversally mounted four-shaft design, implementing an electronically controlled hydraulic circuit that provides five forward speeds and one in reverse. Engine power is transmitted through the torque converter, a combination of shafts which hold gears and clutches and a differential that transmits power to the driving wheels. SH-AWD equipped models also have a transfer assembly which transmits power to the SH-AWD differential.

Shaft, Gears and Clutches
Four parallel shafts hold gears and clutches. The gears on the input shaft (mainshaft), secondary shaft and intermediary shaft are in constant mesh with those on the output shaft (countershaft). When specific gears are engaged by the clutches, power is transmitted through the mainshaft, to the secondary shaft, the intermediary shaft, and/or the countershaft, then to the final drive gear of the differential to provide drive.

Shift Control Mechanism
To shift gears, the PCM controls shift solenoid valves A, B, C and D, and automatic transmission (A/T) clutch pressure control solenoid valves A, B, and C. The shift solenoid valves change the positions of the shift valves in the valve body which open and close ports to sending hydraulic pressure to the appropriate clutch. A/T clutch pressure control solenoid valves A, B, and C change the position of CPC valves A and B, and the reverse CPC valve, to control hydraulic pressure going to the clutches, which allows smooth shifts between gears.

Electronic Control
Shifting and lock-up is achieved by a system of solenoid valves driven by the PCM to control ATF flow through various valves in the valve bodies to select the appropriate gears for all driving conditions.

Hydraulic Control
The valve bodies include the main valve body, the regulator valve body, the secondary valve body, and the accumulator body. They are mounted to the torque converter housing. Fluid from the regulator valve passes through the manual valve to the various control valves. All the clutches receive fluid from the internal hydraulic circuit.

Torque Converter
The torque converter is a fluid coupling, which allows the engine to spin independently of the transmission yet connects them together as needed. It is an assembly that consists of an impeller (pump), turbine, stator and lock-up clutch, which uses automatic transmission fluid (ATF) to transmit engine power to the input shaft (mainshaft), and acts as a flywheel to help the engine run smoothly. During certain conditions the lock-up clutch is engaged by the PCM to mechanically connect the engine's crankshaft with the input shaft (mainshaft) which improves fuel economy. Around the outside of the torque converter housing is a ring gear which meshes with the starter ring gear, used by the starter to start the engine.

Lock-up Mechanism
The lock-up mechanism causes the input shaft (mainshaft) to rotate at the same speed as the engine crankshaft. Pressurized ATF is drained from between the torque converter cover and the torque converter clutch piston through a fluid passage, causing the torque converter clutch piston to be held against the torque converter housing. Together with the hydraulic control, the PCM optimizes the timing and degree of lock-up. The lock-up mechanism operates in D (2nd, 3rd, 4th, and 5th gears) and S (2nd, 3rd, and 4th gears).

Gear Selection
The shift lever has five positions; P: PARK, R: REVERSE, N: NEUTRAL, D: DRIVE 1st through 5th gear, and S: DRIVE 1st through 4th gear with automatic shift mode and 1st through 5th with sequential sportshift mode.

Position		Description
P: PARK		Front wheels locked; park pawl engaged with park gear on secondary shaft. All clutches are released.
R: REVERSE		Reverse; reverse selector engaged with countershaft reverse gear and 5th clutch engaged.
N: NEUTRAL		All clutches are released.
D: DRIVE (1st through 5th)		General driving; starts off in 1st, shifts automatically to 2nd, 3rd, 4th, then 5th, depending on vehicle speed and accelerator pedal position. Downshifts through 4th, 3rd, 2nd, and 1st on deceleration to stop. D-paddle shift mode is also equipped; the transmission can be shifted manually with the paddle shifter + (upshift switch) and paddle shifter — (downshift switch) under certain particular conditions. The lock-up mechanism operates in 2nd, 3rd, 4th, and 5th gears.
S: DRIVE	Automatic shift mode (1st through 4th)	Used for rapid acceleration at highway speeds and general driving, up-hill and down-hill driving; starts off in 1st, shifts automatically to 2nd, 3rd then 4th, depending on vehicle speed and accelerator pedal position. Downshifts through 3rd, 2nd and 1st on deceleration to stop. The lock-up mechanism operates in 3rd and 4th gears.
	Sequential sportshift mode (1st through 5th)	Manual gear shift driving; vehicle can start off in 1st gear, and does not upshift automatically. Vehicle can also start off in 2nd gear, and does not upshift and downshift automatically. Downshifts automatically to 1st on deceleration to stop. The lock-up mechanism operates in 2nd, 3rd, 4th, and 5th gears.

Starting is possible only in P and N because of a neutral-safety switch.

Automatic Transmission (A/T) Gear Position Indicator
The A/T gear position indicator in the gauge control module shows which shift lever position has been selected.

Shift Indicator and M Indicator
When the transmission is switched into the sequential sportshift mode, the shift indicator in the gauge control module displays the gear selected, and the M indicator next to the shift indicator comes on. The shift indicator also displays the gear selected in the D-paddle shift mode, but the M indicator does not come on.

Transfer Assembly
The transfer assembly consists of the transfer drive gear on the differential, the transfer output shaft in the transmission, the transfer drive gear (hypoid gear), the transfer shaft, the transfer output shaft (hypoid gear), and the companion flange. The transfer assembly is on the rear side of the transmission, beside the differential. The transfer drive gear on the differential drives the transfer output shaft in the transmission. The transfer output shaft in the transmission is connected to the transfer drive gear (hypoid gear) by splines. Power is transmitted from the transfer drive gear on the differential to the rear differential via the transfer assembly and the propeller shaft.

System Description (cont'd)

Clutches and Gears

The five-speed automatic transmission uses hydraulically-actuated clutches to engage or disengage the transmission gears. When hydraulic pressure is introduced into the clutch drum, the clutch piston moves. This presses the friction discs and steel plates together, locking them so they don't slip. Power is then transmitted through the engaged clutch pack to its hub-mounted gear. Likewise, when the hydraulic pressure is bled from the clutch pack, the piston releases the friction discs and the steel plates, and they are free to slide past each other. This allows the gear to spin independently on its shaft, transmitting no power.

1st Clutch
The 1st clutch engages/disengages 1st gear, and is located at the left end of the secondary shaft. The 1st clutch is supplied hydraulic pressure by its ATF feed pipe within the secondary shaft.

1st-hold Clutch
The 1st-hold clutch engages/disengages 1st-hold in 1st gear in S, and in the D-paddle shift mode. The 1st-hold clutch is located in the 1st clutch drum, and is supplied hydraulic pressure by its ATF feed pipe within the secondary shaft.

2nd Clutch
The 2nd clutch engages/disengages 2nd gear, and is located at the right end of the secondary shaft. The 2nd clutch is supplied hydraulic pressure through the secondary shaft by a circuit connected to the internal hydraulic circuit.

3rd Clutch
The 3rd clutch engages/disengages 3rd gear, and is located at the end of the intermediary shaft. The 3rd clutch is supplied hydraulic pressure through the intermediary shaft by a circuit connected to the internal hydraulic circuit.

4th Clutch
The 4th clutch engages/disengages 4th gear, and is located at the middle of the mainshaft. The 4th clutch is joined back-to-back to the 5th clutch. The 4th clutch is supplied hydraulic pressure through the mainshaft by a circuit connected to the internal hydraulic circuit.

5th Clutch
The 5th clutch engages/disengages 5th gear, as well as reverse gear, and is located at the middle of the mainshaft. The 5th clutch is joined back-to-back to the 4th clutch. The 5th clutch is supplied hydraulic pressure through the mainshaft by a circuit connected to the internal hydraulic circuit.

One-way Clutch
The one-way clutch is positioned between the 1st clutch hub and the secondary shaft 1st gear. The secondary shaft 1st gear is splined to the 1st-hold clutch hub, with the 1st-hold clutch hub splined to the secondary shaft. The secondary shaft 1st gear provides the outer race surface, and the 1st clutch hub provides the inner race surface. The one-way clutch locks when power is transmitted from the secondary shaft 1st gear to the countershaft 1st gear. The 1st clutch and gears remain engaged in 1st, 2nd, 3rd, 4th, and 5th gear ranges in D or S.
However, the one-way clutch disengages when the 2nd, 3rd, 4th, or 5th clutches and gears are applied in D or S. This is because the increased rotational speed of the gears on the secondary shaft causes the one-way clutch to free-wheel with the 1st clutch still engaged.

Transmission Cutaway View

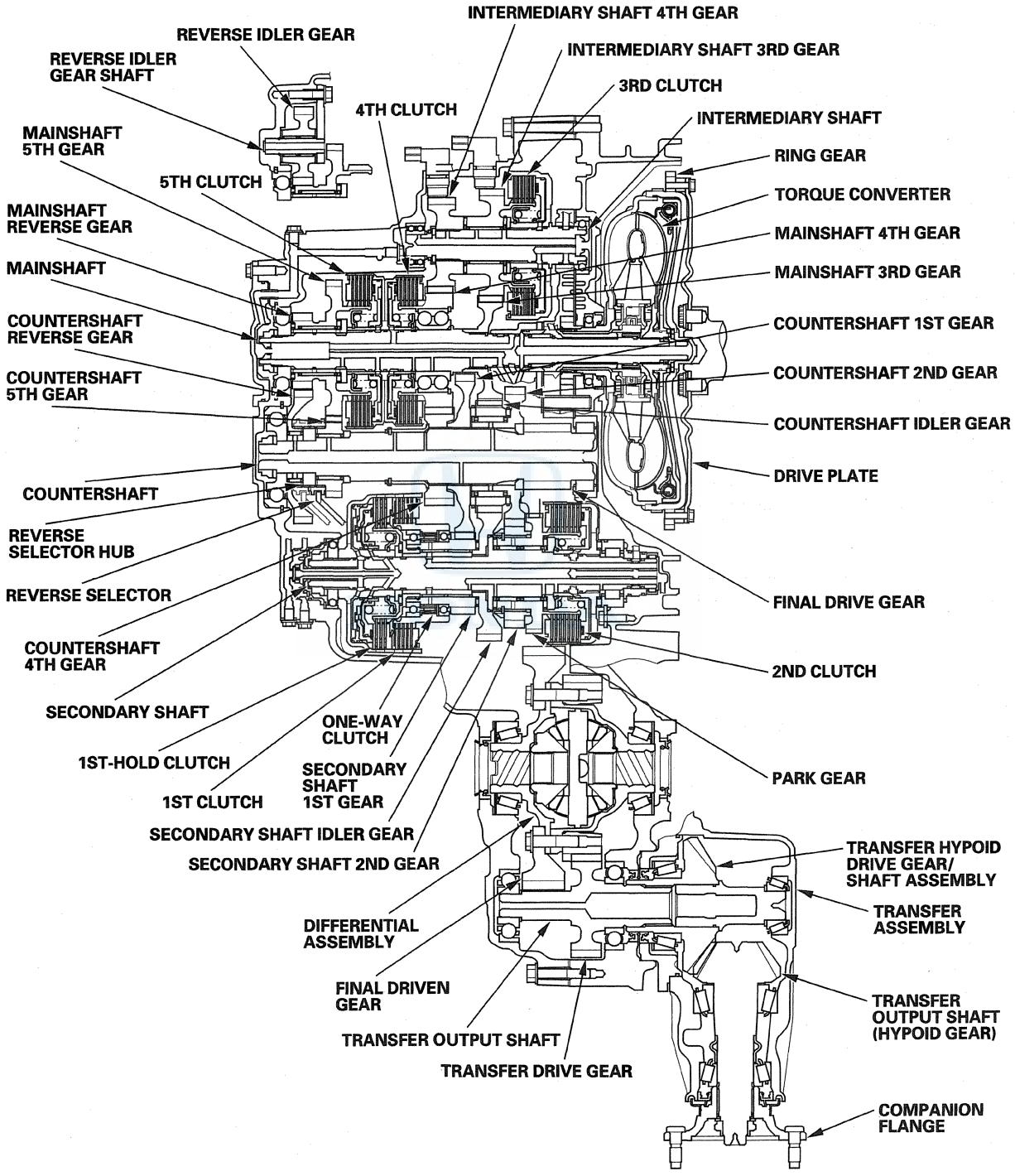

(cont'd)

System Description (cont'd)

Clutches and Gears (cont'd)

Gear Operation

Gears on the mainshaft:
- 4th gear is engaged/disengaged with the mainshaft by the 4th clutch.
- 5th gear is engaged/disengages with the mainshaft by the 5th clutch.
- Reverse gear is engaged/disengaged with the mainshaft by the 5th clutch.
- 3rd gear is splined with the mainshaft and rotates with the mainshaft.

Gears on the countershaft:
- Final drive gear is integral with the countershaft.
- 1st gear, 2nd gear, and 4th gear are splined with the countershaft, and rotate with the countershaft.
- 5th gear and reverse gear rotate freely from the countershaft. The reverse selector engages 5th gear and reverse gear with the reverse selector hub. The reverse selector hub is splined to the countershaft so 5th gear and reverse gear engage with the countershaft.
- Idler gear is located over 2nd gear, and rotates freely from the countershaft.

Gears on the secondary shaft:
- 1st gear is engaged with the secondary shaft by the 1st clutch and the one-way clutch when accelerating, and 1st gear is disengaged from the 1st clutch at the one-way clutch when decelerating. 1st gear is engaged with the secondary shaft by the 1st-hold clutch when decelerating for engine braking.
- 2nd gear is engaged/disengaged with the secondary shaft by the 2nd clutch.
- Idler gear is splined with the secondary shaft, and rotates with the secondary shaft.
- Park gear is integral with the 2nd gear.

Gears on the intermediary shaft:
- 3rd gear is engaged/disengaged with the intermediary shaft by the 3rd clutch.
- 4th gear is splined with the intermediary shaft.

Power Flow

P Position
Hydraulic pressure is not applied to the clutches. Power is not transmitted to the countershaft. The countershaft is locked by the park pawl interlocking the park gear.

N Position
Engine power transmitted from the mainshaft drives the mainshaft 3rd gear, the intermediary shaft 3rd gear, but hydraulic pressure is not applied to the clutches. Power is not transmitted to the countershaft. In this position, the position of the reverse selector differs according to whether the shift lever shifted from D or R:

- When shifted from D, the reverse selector engages with the countershaft 5th gear and the reverse selector hub, and the 5th gear engages with the countershaft.
- When shifted from R, the reverse selector engages with the countershaft reverse gear and the reverse selector hub, and the reverse gear engages with the countershaft.

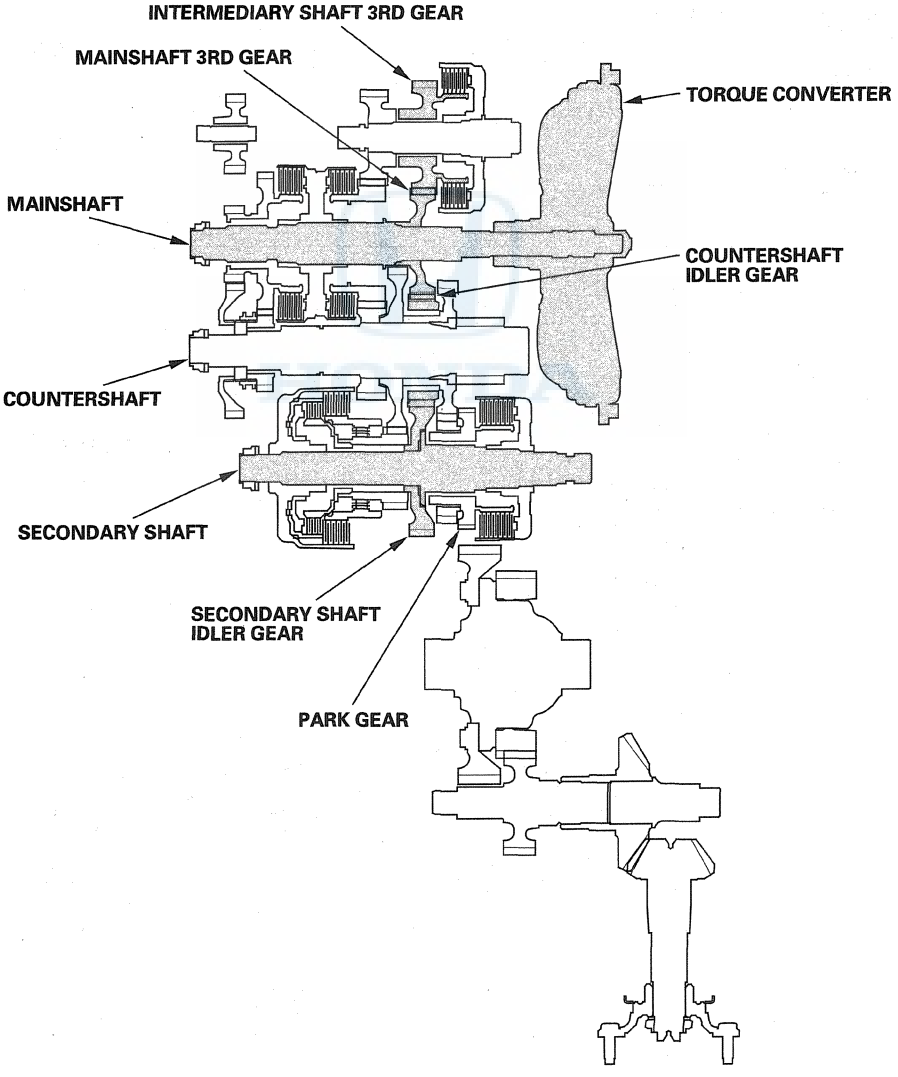

(cont'd)

System Description (cont'd)

Power Flow (cont'd)

D Position and S Position with Automatic Shift Mode
In D, the optimum gear is automatically selected from the 1st, 2nd, 3rd, 4th, and 5th gears; and 1st, 2nd, 3rd and 4th gears in S with automatic shift mode according to conditions such as the balance between the accelerator pedal opening (engine loading) and vehicle speed.

In 1st gear
- Hydraulic pressure is applied to the 1st clutch, then the 1st clutch engages the secondary shaft 1st gear with the secondary shaft by the one-way clutch.
- The mainshaft 3rd gear drives the secondary shaft via the countershaft idler gear and secondary shaft idler gear.
- The secondary shaft 1st gear drives the countershaft 1st gear and the countershaft.
- Power is transmitted to the final drive gear, which in turn drives the final driven gear and the transfer drive gear.
- The transfer output shaft drives the transfer hypoid drive gear/shaft and the transfer output shaft (hypoid gear).

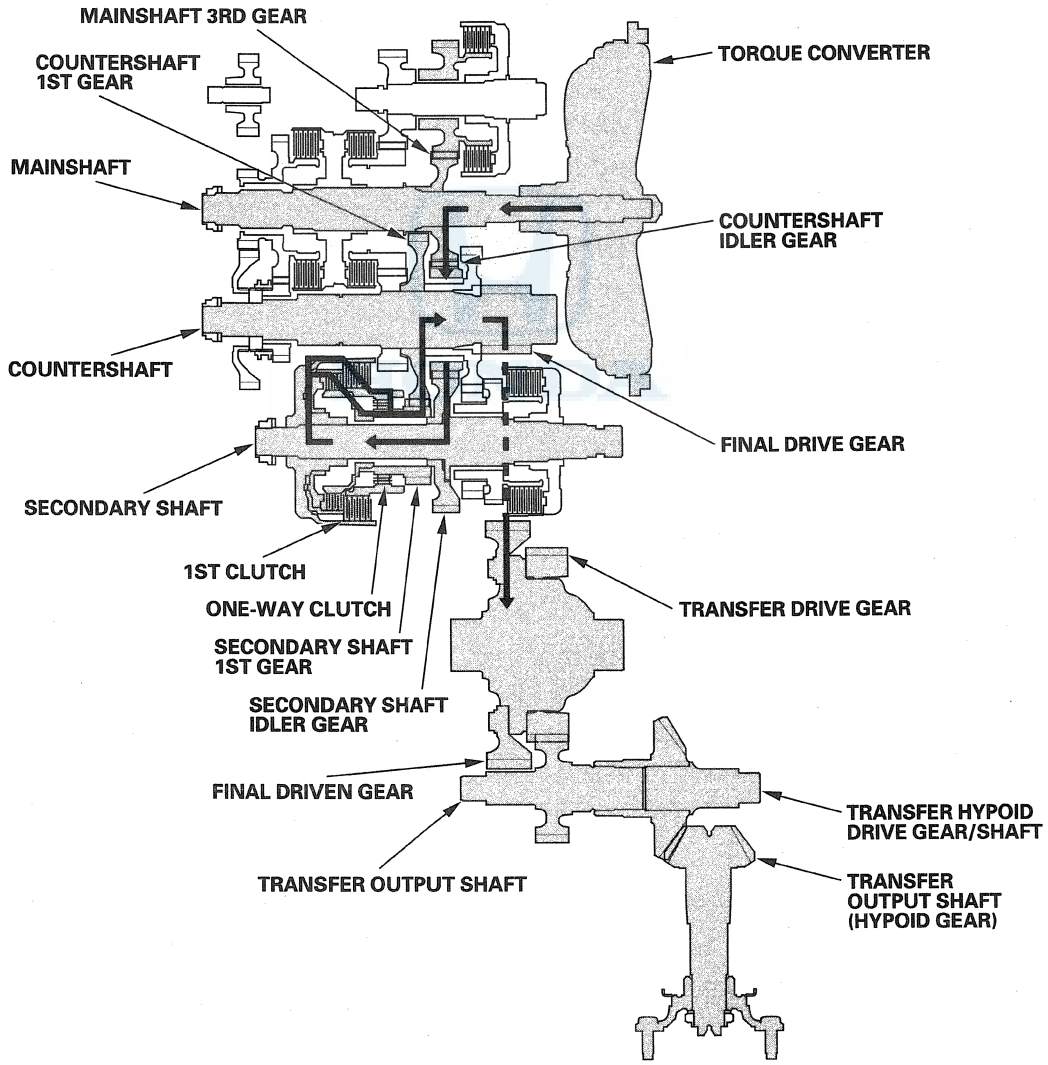

In 2nd gear

- Hydraulic pressure is applied to the 2nd clutch, then the 2nd clutch engages the secondary shaft 2nd gear with the secondary shaft.
- The mainshaft 3rd gear drives the secondary shaft via the countershaft idler gear and secondary shaft idler gear.
- The secondary shaft 2nd gear drives the countershaft 2nd gear and the countershaft.
- Power is transmitted to the final drive gear, which in turn drives the final driven gear and the transfer drive gear.
- The transfer output shaft drives the transfer hypoid drive gear/shaft and the transfer output shaft (hypoid gear).
- Hydraulic pressure is also applied to the 1st clutch, but since the rotation speed of 2nd gear exceeds that of 1st gear, power from 1st gear is cut off at the one-way clutch.

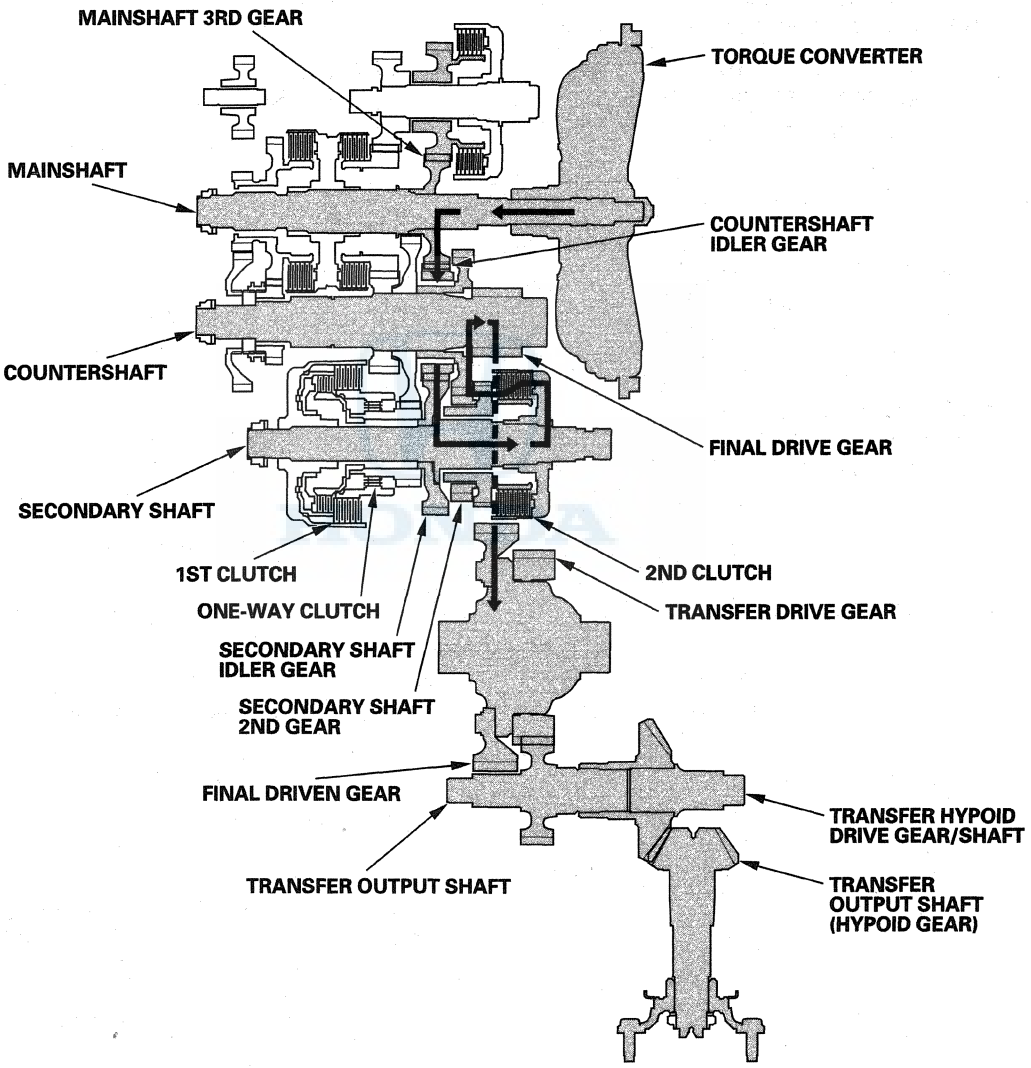

(cont'd)

System Description (cont'd)

Power Flow (cont'd)

In 3rd gear

- Hydraulic pressure is applied to the 3rd clutch, then the 3rd clutch engages the intermediary shaft 3rd gear with the intermediary shaft.
- The mainshaft 3rd gear drives the intermediary shaft 4th gear via the intermediary shaft 3rd gear and the 3rd clutch.
- The intermediary shaft 4th gear drives the countershaft 4th gear and the countershaft via the mainshaft 4th gear.
- Power is transmitted to the final drive gear, which in turn drives the final driven gear and the transfer drive gear.
- The transfer output shaft drives the transfer hypoid drive gear/shaft and the transfer output shaft (hypoid gear).
- Hydraulic pressure is also applied to the 1st clutch, but since the rotation speed of 3rd gear exceeds that of 1st gear, power from 1st gear is cut off at the one-way clutch.

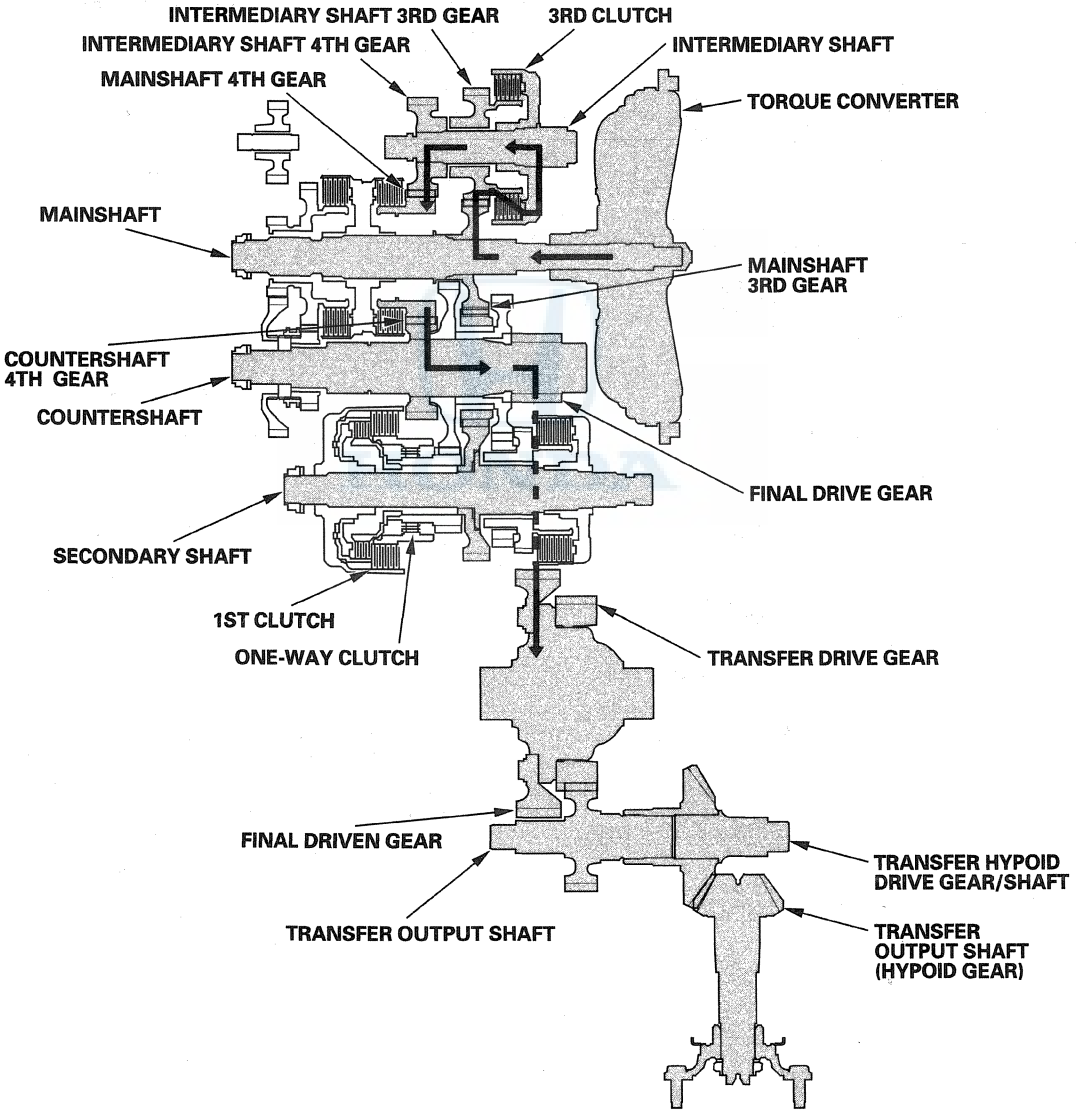

In 4th gear

- Hydraulic pressure is applied to the 4th clutch, then the 4th clutch engages the mainshaft 4th gear with the mainshaft.
- The mainshaft 4th gear drives the countershaft 4th gear and the countershaft.
- Power is transmitted to the final drive gear, which in turn drives the final driven gear and the transfer drive gear.
- The transfer output shaft drives the transfer hypoid drive gear/shaft and the transfer output shaft (hypoid gear).
- Hydraulic pressure is also applied to the 1st clutch, but since the rotation speed of 4th gear exceeds that of 1st gear, power from 1st gear is cut off at the one-way clutch.

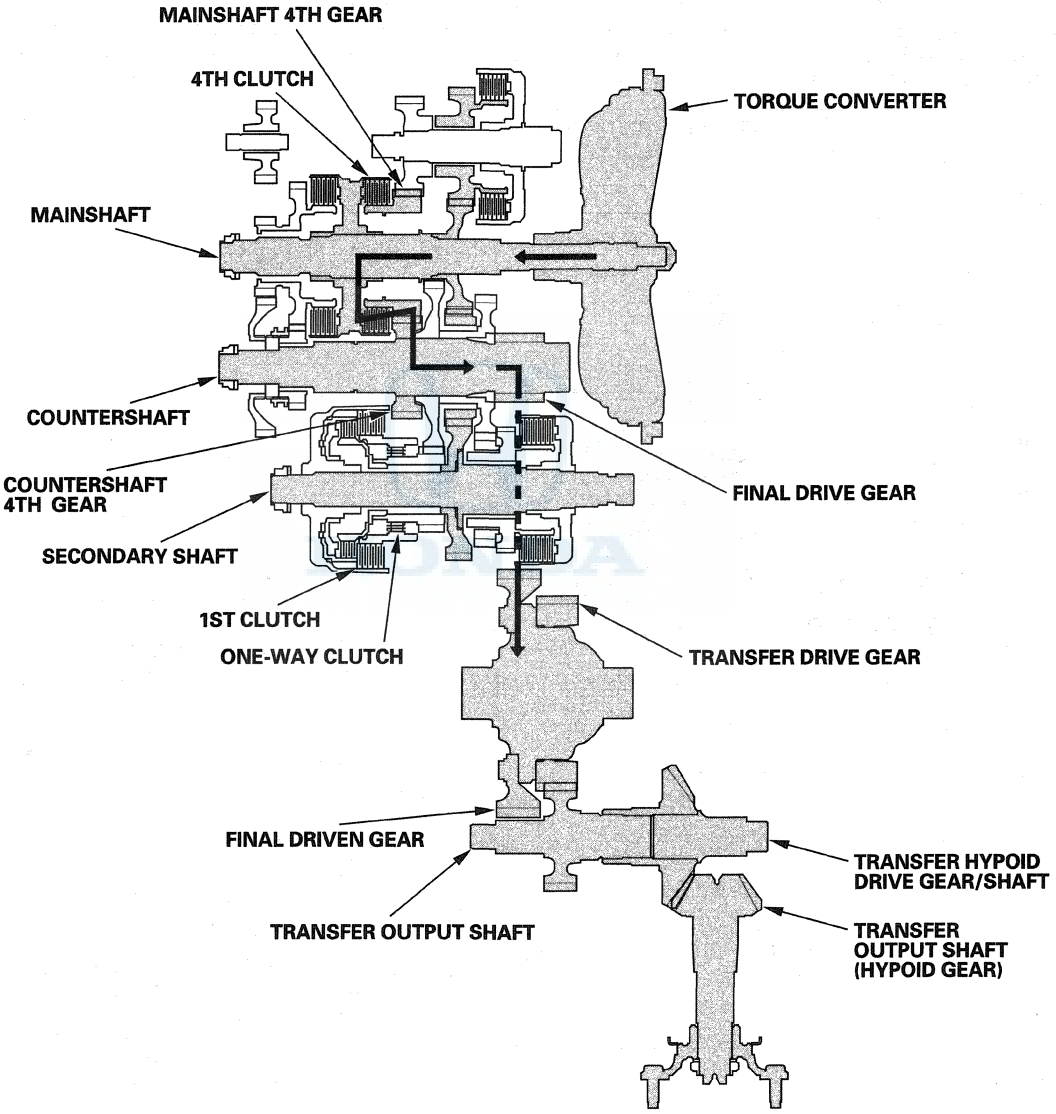

(cont'd)

System Description (cont'd)

Power Flow (cont'd)

In 5th gear

- Hydraulic pressure is applied to the servo valve to engage the reverse selector with the countershaft 5th gear while the shift lever in the forward range (D and S).
- Hydraulic pressure is applied to the 5th clutch, then the 5th clutch engages the mainshaft 5th gear with the mainshaft.
- The mainshaft 5th gear drives the countershaft 5th gear, which drives the reverse selector hub and the countershaft.
- Power is transmitted to the final drive gear, which in turn drives the final driven gear and the transfer drive gear.
- The transfer output shaft drives the transfer hypoid drive gear/shaft and the transfer output shaft (hypoid gear).
- Hydraulic pressure is also applied to the 1st clutch, but since the rotation speed of 5th gear exceeds that of 1st gear, power from 1st gear is cut off at the one-way clutch.

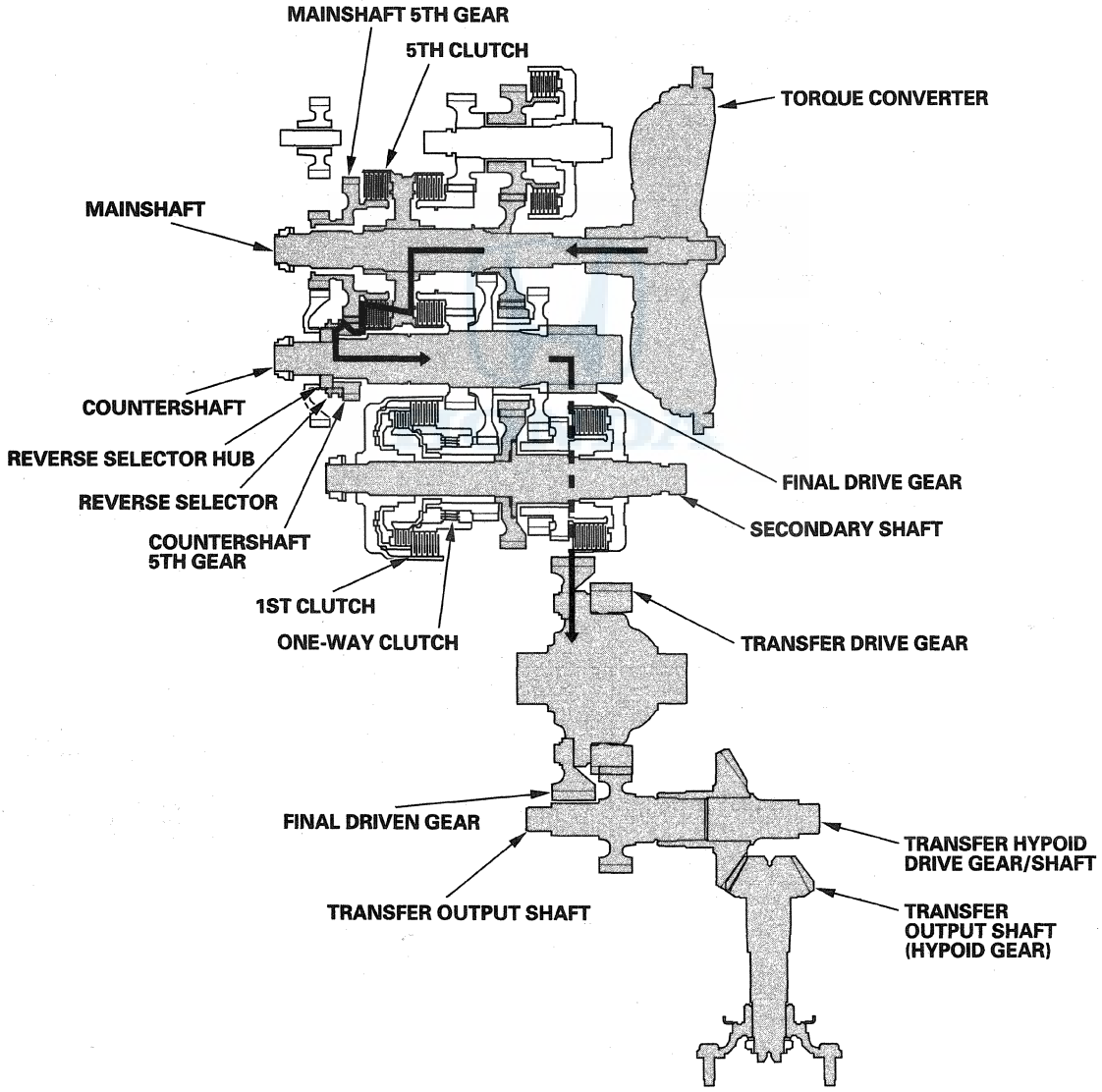

Acceleration in 1st gear in S with sequential sportshift mode, and in D with D-paddle shift mode

In S with sequential sportshift mode, and in D with D-paddle shift mode under an acceleration, hydraulic pressure is applied to the 1st clutch and the 1st-hold clutch. The power flow when accelerating is as follows:

- Hydraulic pressure is applied to the 1st clutch, then the 1st clutch engages the secondary shaft 1st gear with the secondary shaft by the one-way clutch.
- The mainshaft 3rd gear drives the secondary shaft via the countershaft idler gear and secondary shaft idler gear.
- The secondary shaft 1st gear drives the countershaft 1st gear and the countershaft.
- Hydraulic pressure is also applied to the 1st-hold clutch, and the 1st-hold clutch engages the secondary shaft 1st gear with the secondary shaft.
- Power is transmitted to the final drive gear, which in turn drives the final driven gear and the transfer drive gear.
- The transfer output shaft drives the transfer hypoid drive gear/shaft and the transfer output shaft (hypoid gear).

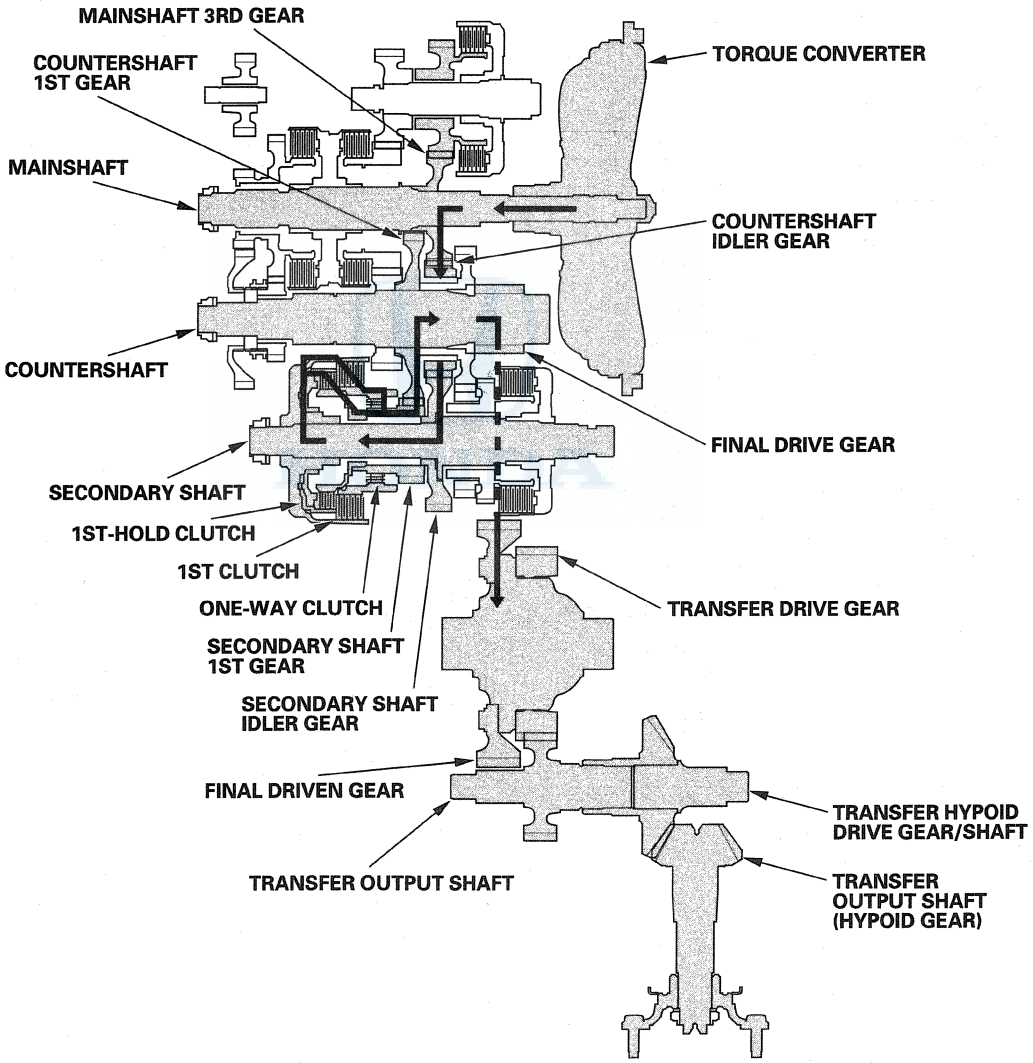

(cont'd)

System Description (cont'd)

Power Flow (cont'd)

Deceleration in 1st gear in S with sequential sportshift mode, and in D with D-paddle shift mode
The power flow in 1st gear in S with sequential sportshift mode, and in D with D-paddle shift mode when decelerating is as follows:

- Hydraulic pressure is applied to the 1st clutch and the 1st-hold clutch.
- Rolling resistance from the road surface goes through the front wheels to the final driven gear, then to the countershaft idler gear.
- The one-way clutch disengages because the application of torque is reversed.
- The force conveyed to the secondary shaft idler gear turns the mainshaft 3rd gear via the countershaft idler gear. As a result, engine braking can be obtained with 1st gear.

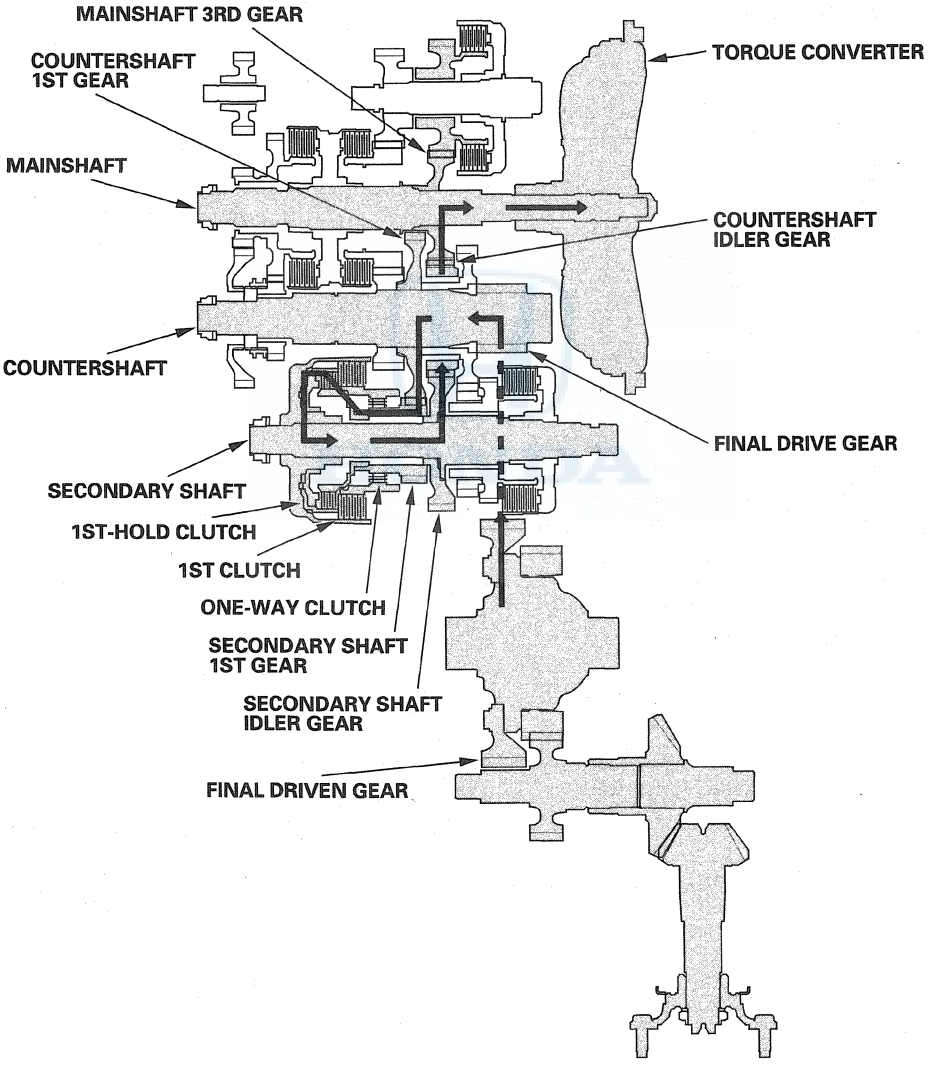

R Position

- Hydraulic pressure is applied to the servo valve to engage the reverse selector with the countershaft reverse gear while the shift lever is in R.
- Hydraulic pressure is applied to the 5th clutch, then the 5th clutch engages the mainshaft reverse gear with the mainshaft.
- The mainshaft reverse gear drives the countershaft reverse gear via the reverse idler gear.
- The countershaft reverse gear drives the countershaft via the reverse selector which drives the reverse selector hub.
- The rotation direction of the countershaft is changed by the reverse idler gear.
- Power is transmitted to the final drive gear, which in turn drives the final driven gear and the transfer drive gear.
- The transfer output shaft drives the transfer hypoid drive gear/shaft and the transfer output shaft (hypoid gear).

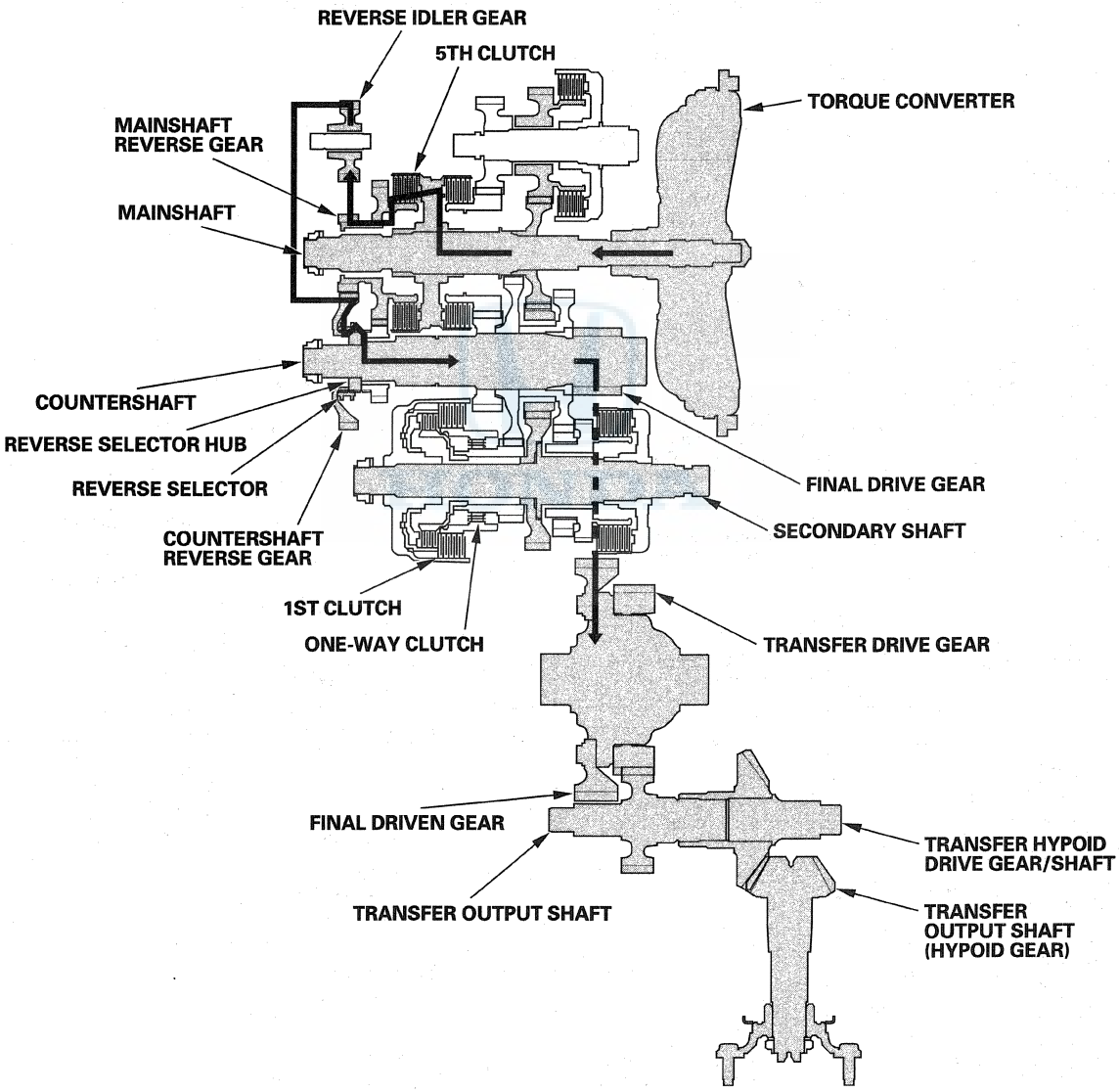

System Description (cont'd)

Electronic Control System

Electronic Control
The electronic control system consists of the powertrain control module (PCM), the sensors, and the seven solenoid valves. Shifting and lock-up are electronically controlled for comfortable driving under all conditions.

Functional Diagram
The PCM receives input signals from the sensors, the switches, and other control units then processes the data, and sends output signals to the engine control system and the A/T control system. The A/T control system includes shift control, clutch pressure control, and lock-up control. The PCM switches the shift solenoid valves and the A/T clutch pressure control solenoid valves on and off to control gear selection and torque converter clutch lock-up.

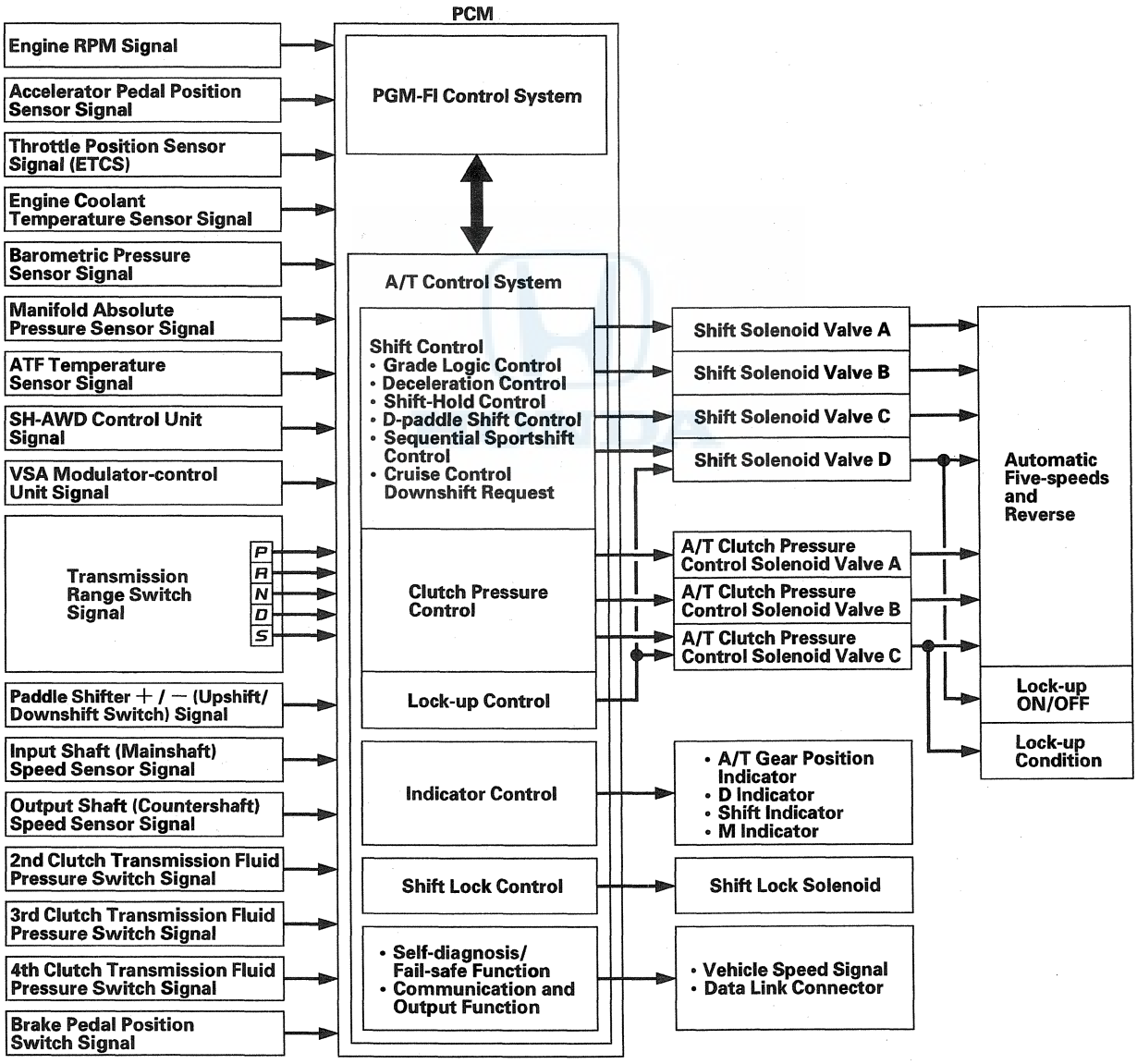

Shift Control

The PCM instantly determines which gear should be selected by various signals sent from the sensors and the switches, and it actuates the shift solenoid valves A, B, C, and D to control gear selection.

There are two types of shift solenoid valves:

- Shift solenoid valves A and D use the ON-OPEN/OFF-CLOSE type; the shift solenoid valve opens the port of shift solenoid valve pressure while the shift solenoid valve is turned ON by the PCM, and closes the port when shift solenoid valve is OFF.
- Shift solenoid valves B and C use the ON-CLOSE/OFF-OPEN type; the shift solenoid valve closes the port of shift solenoid valve pressure while the shift solenoid valve is turned ON by the PCM, and opens the port when shift solenoid valve is OFF.

The combination of driving signals to shift solenoid valves A, B, C, and D are shown in the table.

Position	Gear position	Shift solenoid valves			
		A	B	C	D
D and S	Shifting from N	OFF	ON	OFF	OFF
	Stays in 1st	OFF	ON	ON	OFF or ON
	Shifting gears between 1st and 2nd	ON	ON	ON	OFF or ON
	Stays in 2nd	ON	ON	OFF	OFF or ON
	Shifting gears between 2nd and 3rd	ON	ON	ON	OFF or ON
	Stays in 3rd	ON	OFF	ON	OFF or ON
	Shifting gears between 3rd and 4th	ON	OFF	OFF	OFF or ON
	Stays in 4th	OFF	OFF	OFF	OFF or ON
D	Shifting gears between 4th and 5th	OFF	OFF	ON	OFF or ON
	Stays in 5th	OFF	ON	ON	OFF or ON
S with sequential sportshift mode	1st	OFF	ON	ON	OFF or ON
	2nd	ON	ON	OFF	OFF or ON
	3rd	ON	OFF	ON	OFF or ON
	4th	OFF	OFF	OFF	OFF or ON
	5th	OFF	ON	ON	OFF or ON
N	Neutral	OFF	ON	OFF	OFF
R	Shifting from P and N	OFF	ON	ON	ON
	Stays in reverse	ON	ON	OFF	ON
	Reverse inhibit control	OFF	ON	OFF	OFF
P	Park	OFF	ON	OFF	ON

(cont'd)

System Description (cont'd)

Electronic Control System (cont'd)

Shift Control - Grade Logic Control

The grade logic control system is used to control shifting in D, and in S with automatic shift mode. The PCM compares actual driving conditions with programmed driving conditions, based on the input from the throttle position sensor, the engine coolant temperature sensor, the barometric pressure sensor, the brake pedal position switch signal, and the shift lever position signal, to control shifting while the vehicle is ascending or descending a slope.

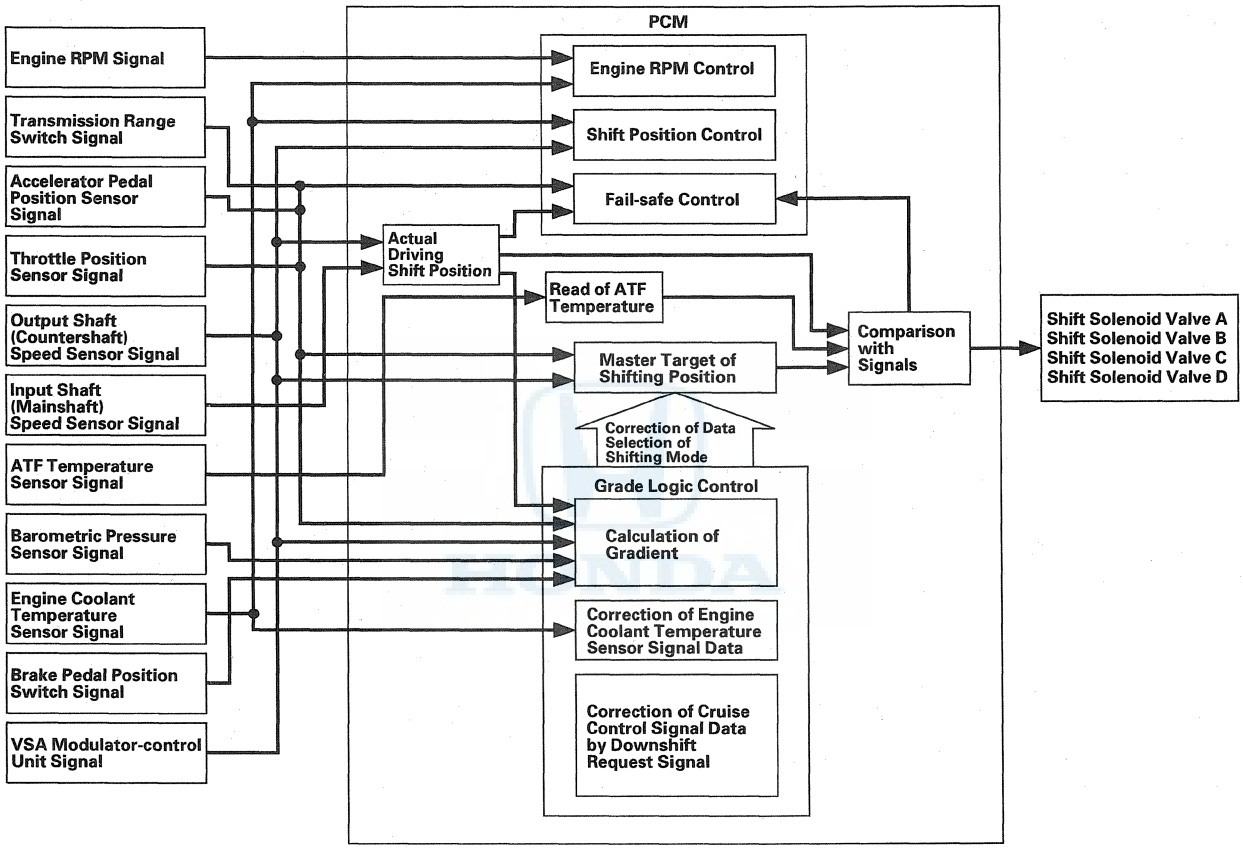

Grade Logic Control: Ascending Control
When the PCM determines that the vehicle is climbing a hill in D, and in S with automatic shift mode, the system extends the engagement area of 2nd gear, 3rd gear, and 4th gear to prevent the transmission from frequently shifting between 2nd and 3rd gears, between 3rd and 4th gears, and between 4th and 5th gears, so the vehicle can run smoothly and have more power when needed.

NOTE: Shift commands stored in the PCM between 2nd and 3rd gears, between 3rd and 4th gears, and between 4th and 5th gears, enable the PCM to automatically select the most suitable gear based on the steepness of the grade.

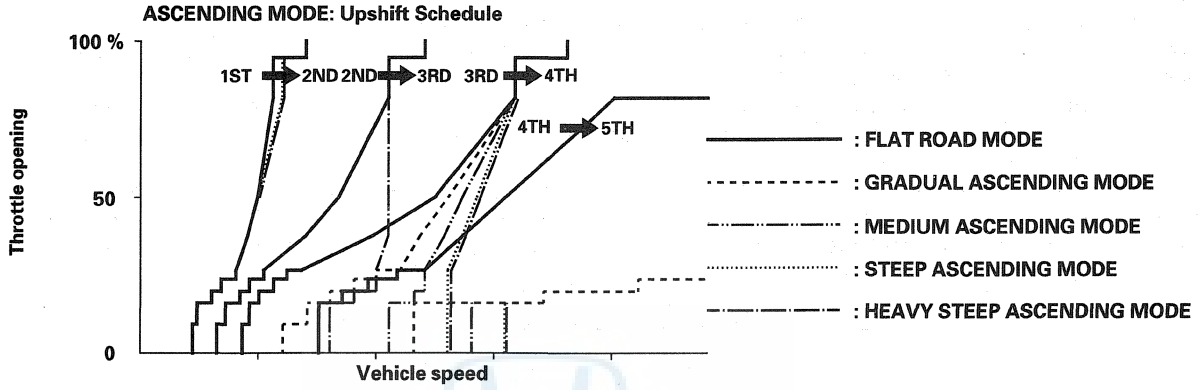

Grade Logic Control: Descending Control
When the PCM determines that the vehicle is going down a hill in D, and in S with automatic shift mode, the upshift speed from 4th to 5th gear, 3rd to 4th gear, and from 2nd to 3rd (when the throttle is closed) becomes higher than the set speed for flat road driving to extend the 4th gear, 3rd gear, and 2nd gear driving areas. This, in combination with engine braking from the deceleration lock-up, achieves smooth driving when the vehicle is descending. There are three descending modes with different 4th gear driving areas, 3rd gear driving areas, and 2nd gear driving areas based on the steepness of the grade stored in the PCM. When the vehicle is in 5th or 4th gear and you are decelerating while applying the brakes on a steep hill, the transmission downshifts to a lower gear. When you accelerate, the transmission then returns to a higher gear.

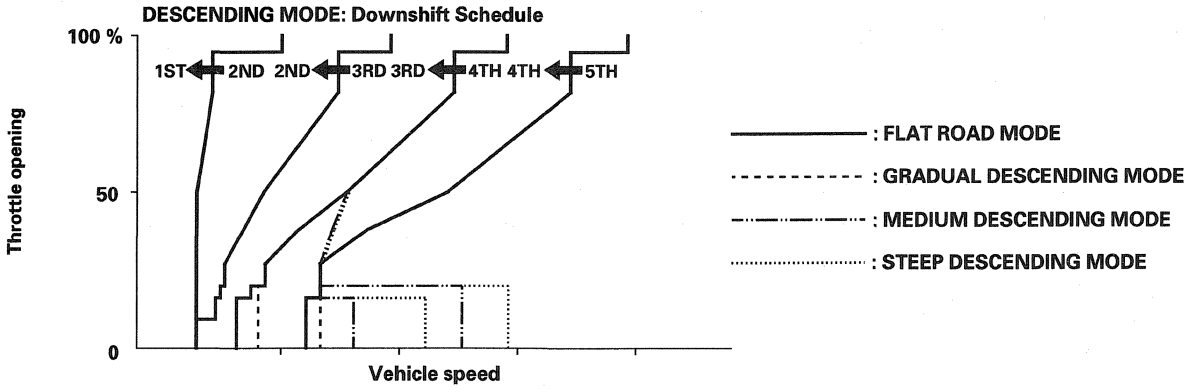

(cont'd)

System Description (cont'd)

Electronic Control System (cont'd)

Deceleration Control

When the vehicle goes around a corner and needs to decelerate first and then accelerate, the PCM goes into the deceleration control mode to reduce the number of times the transmission shifts. When the vehicle is decelerating from speeds above 27 mph (43 km/h), the PCM shifts the transmission from 4th to 3rd earlier than normal to cope with upcoming acceleration.

Shift-Hold Control

When negotiating winding roads, the throttle is suddenly released and the brakes are applied, as is the case when decelerating at the entrance of a corner, Shift-Hold Control keeps the transmission in its current (lower) gear as it negotiates the corner and accelerates out.

When the vehicle is driven aggressively on a winding road, the PCM extends the engagement time of 3rd gear and 4th gear to prevent the transmission from frequently shifting between 3rd, 4th, and 5th gears. This allows the driver to have more control for both acceleration and deceleration.

The PCM monitors the average change in vehicle speed and throttle over time. When these values exceed those for normal driving conditions, the upshift from 3rd to 4th gear and 4th to 5th gear is delayed. This gives more control over power, and engine braking when the driver is driving aggressively around winding roads. The transmission resumes the normal upshift pattern after the PCM determines that normal driving has resumed.

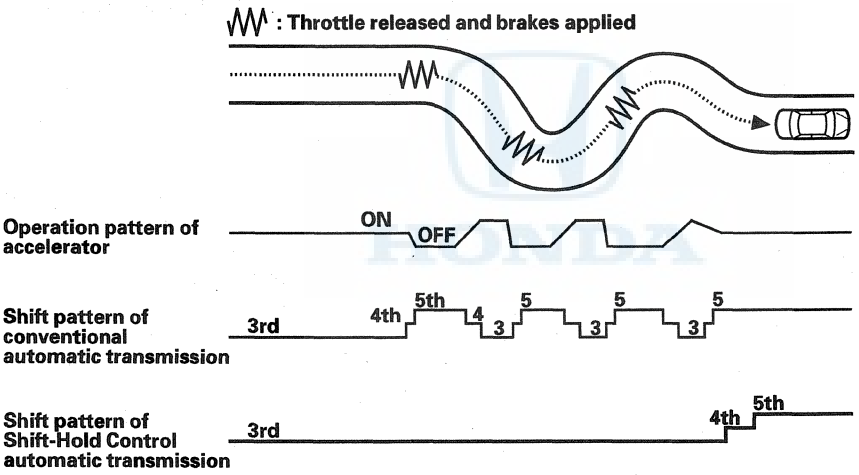

Shift Control - Manual Shift Mode
The RL transmission is provided with a D-paddle shift mode in D, and with a sequential sportshift mode in S. Either mode can be activated by pressing the paddle shifter + (upshift switch) or paddle shifter — (downshift switch) while driving with the shift lever in D and S.

D-Paddle Shift Mode
To engage the D-paddle shift mode, press either of the steering wheel mounted paddle shifters while driving in the D position. In this mode, the transmission can downshift by pressing the paddle shifter — or upshift by pressing the paddle shifter +. Each time the transmission is shifted using the paddles, the shift indicator in the gauge control module displays the current position. The display turns off when the transmission upshifts or downshifts automatically while coasting.
The transmission stays in 5th gear if the paddle shifter + is pressed when driving in 5th gear, and the shift indicator displays "5" for 2 seconds, then goes off. The transmission stays in 1st gear if the paddle shifter — is pressed when driving in 1st gear, and the shift indicator displays "1" for 2 seconds, then goes off.
The transmission stays in the current gear and does not upshift to the next higher gear if the paddle shifter + is pressed while driving below the minimum allowable speed, and the shift indicator blinks the number of the next higher gear several times, then returns to the number of the current gear.

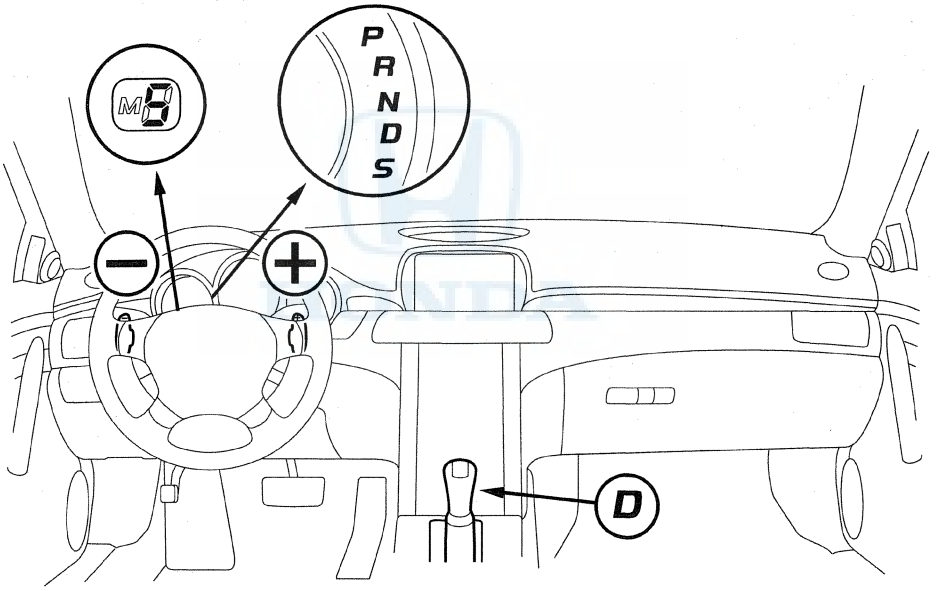

(cont'd)

System Description (cont'd)

Electronic Control System (cont'd)

S Position Automatic Shift Mode and Sequential Sportshift Mode

The S position has two shifting modes; the automatic shift mode and the sequential sportshift mode. In the S position automatic shift mode, the transmission upshifts and downshifts automatically from 1st through 4th gear, and the paddle shifters are ready to be activated to switch to the sequential sportshift mode. In the automatic shift mode, the shift indicator and the M indicator in the gauge control module do not come on.

When the paddle shifter + (upshift switch) or paddle shifter — (downshift switch) is pressed, the automatic shift mode is canceled and the sequential sportshift mode comes into operation. The shift indicator displays the number of the selected gear, and the M indicator comes on. In the sequential sportshift mode, the driver can shift up and down manually from 1st through 5th gear by using the paddle shifters, much like a manual transmission. The paddle shifters are installed on the back of the steering wheel, and the driver can shift gears by pressing the paddle shifters without taking either hand off the steering wheel.

In the sequential sportshift mode, the transmission must be shifted up and down by pressing the paddle shifters. However, if the vehicle is coasting at a speed that would cause the engine to over-rev by downshifting, the transmission will not shift when the paddle shifter — is pressed. The shift indicator blinks the number of the selected stage position several times, then returns to the current stage. If the vehicle speed reaches an appropriate speed while the shift indicator is blinking, the transmission downshifts and the shift indicator displays the selected stage. Likewise, if the vehicle is driving below an appropriate speed to upshift when the paddle shifter + is pressed, the transmission will not shift. The shift indicator blinks the number of the selected stage several times, and then returns to the number of the current stage. If the vehicle speed reaches an appropriate upshift speed while the shift indicator is blinking, the transmission upshifts and the shift indicator displays the selected stage.

This mode has automatic downshifting areas so the vehicle can run smoothly with more power to cope with upcoming acceleration. When coasting in 5th gear or 4th gear, the transmission downshifts to the next lower gear if the vehicle slows down to the programmed speed, or by pressing the brake pedal.

When the transmission decelerates to a stop, the transmission shifts to 1st gear automatically. The transmission can be shifted to 2nd gear by pressing the paddle shifter + while the vehicle is stopped, and the vehicle can start off in 2nd gear.

The sequential sportshift mode is canceled when moving the shift lever to any position other than S.

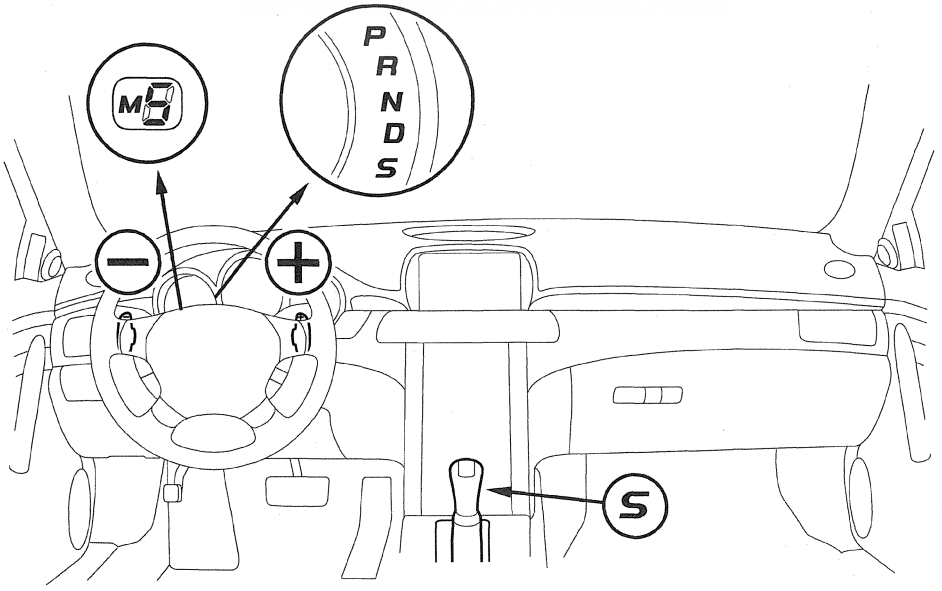

Clutch Pressure Control

The PCM actuates A/T clutch pressure control solenoid valves A, B, and C to control the clutch pressure. When shifting between gears, the clutch pressure regulated by A/T clutch pressure control solenoid valves A, B, and C engages and disengages the clutch smoothly.

The PCM receives input signals from the various sensors and switches, processes the data, and outputs current to A/T clutch pressure control solenoid valves A, B, and C.

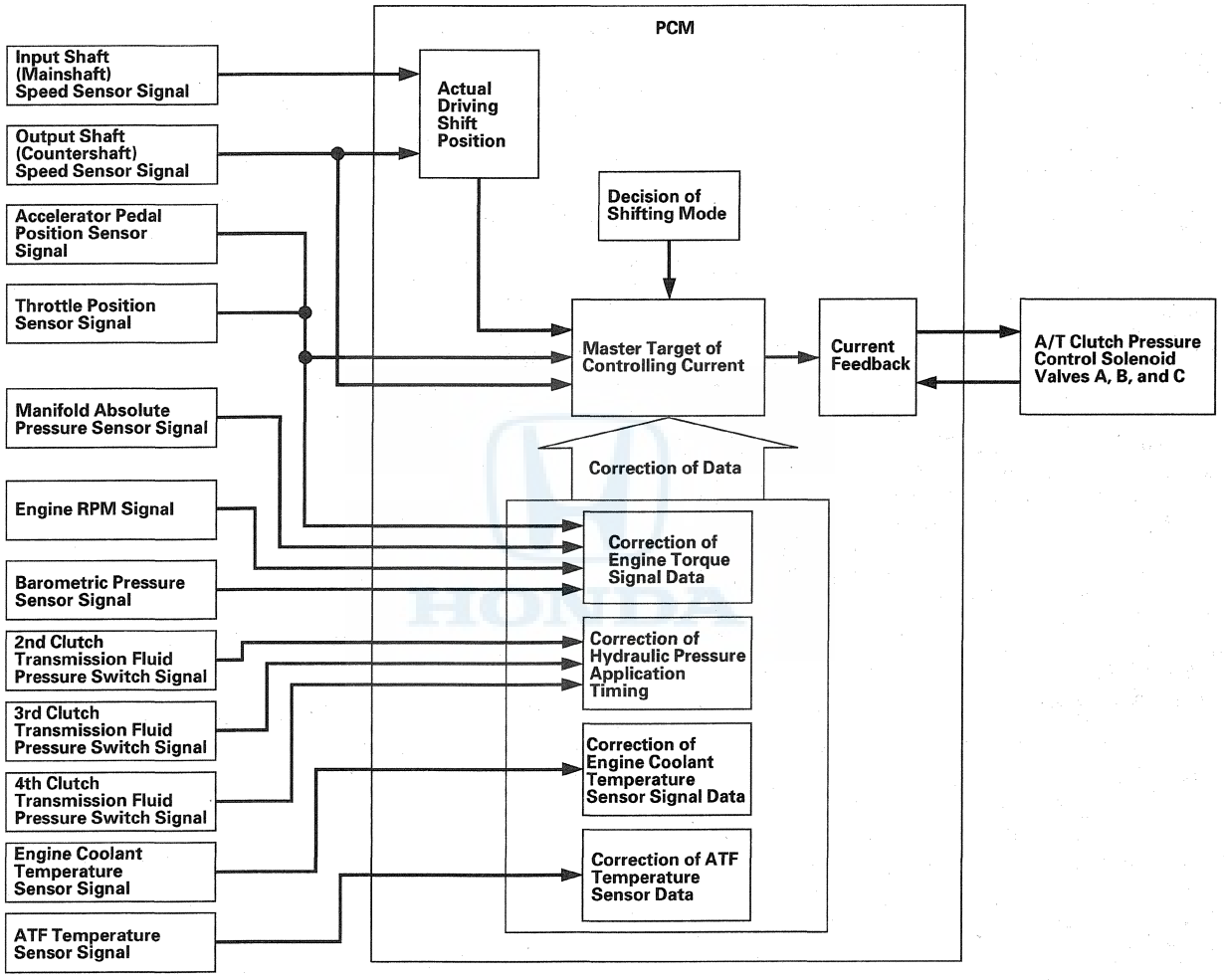

(cont'd)

System Description (cont'd)

Electronic Control System (cont'd)

Lock-up Control

Shift solenoid valve D controls the hydraulic pressure to switch the lock-up shift valve and lock-up ON and OFF. When the PCM actuates the shift solenoid valve D and A/T clutch pressure control solenoid valve C ON, lock-up starts. A/T clutch pressure control solenoid valve C regulates and applies hydraulic pressure to the lock-up control valve to control the amount of lock-up.

The lock-up mechanism operates in 2nd, 3rd, 4th, and 5th gears in D and S with sequential sportshift mode, and 3rd and 4th gears in S with automatic shift mode.

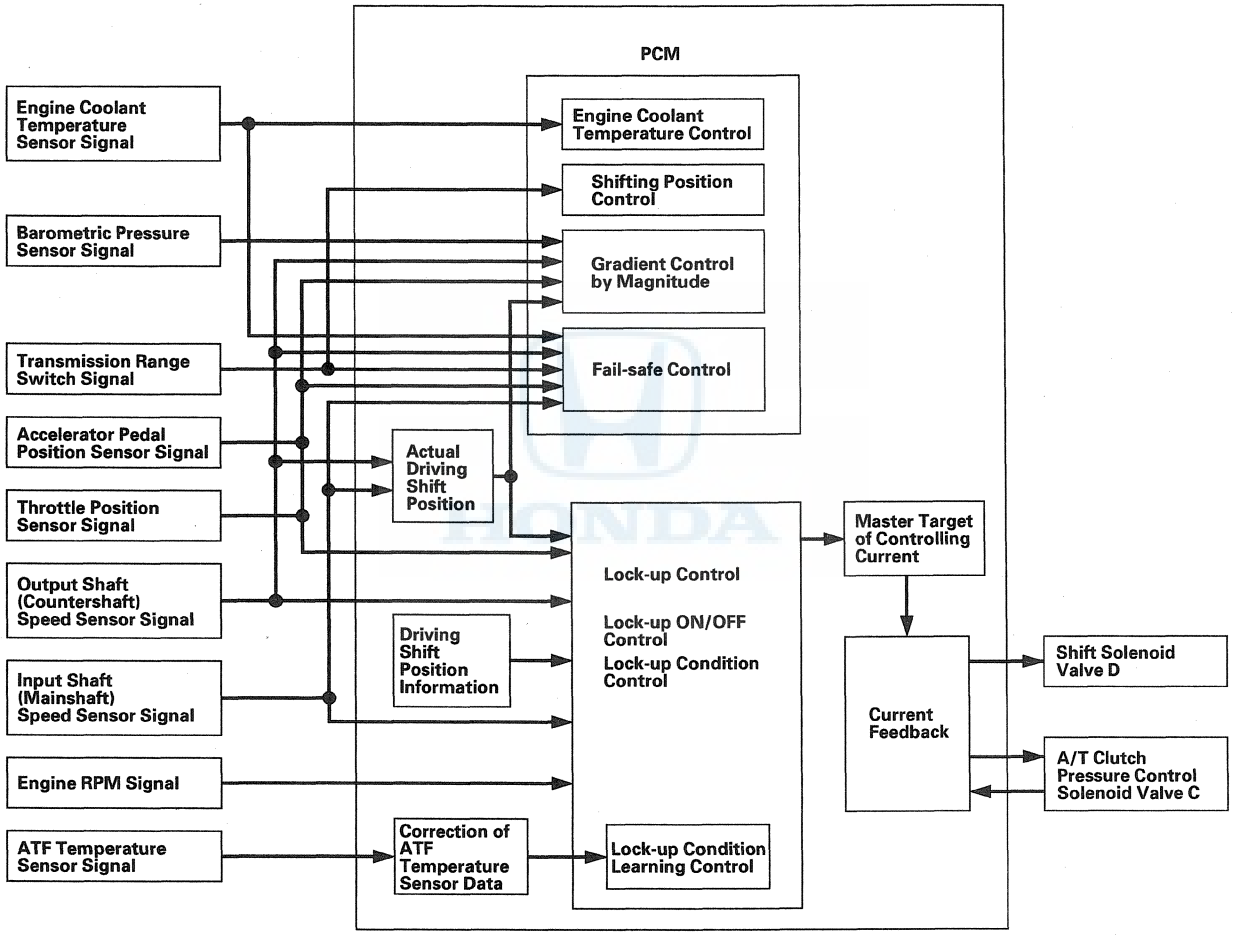

Shift Lock Control

The shift lock control system reduces the risk of the unintentional engine starting. Starting the engine is possible only in P and N, and the shift lever cannot be shifted out of P without pressing the brake pedal and releasing the accelerator. The shift lock mechanism consists of the shift lock solenoid, shift lock stop, shift lock release, and reated parts. The shift lock solenoid is electronically controlled by the shift lock control system signals.

In P without pressing the brake pedal or while pressing the accelerator, the shift lock solenoid remains OFF, and the shift lever cannot be shifted out of P because the shift lock stops the lock pin. However while the brake pedal is pressed and the accelerator is released, the shift lock solenoid is turned ON, and the shift lock solenoid plunger is retracted, releasing the shift lock stop. Pushing the release button on the top of the shift lever passes the lock pin through the shift lock stop, and allows the shift lever to be shifted out of P.

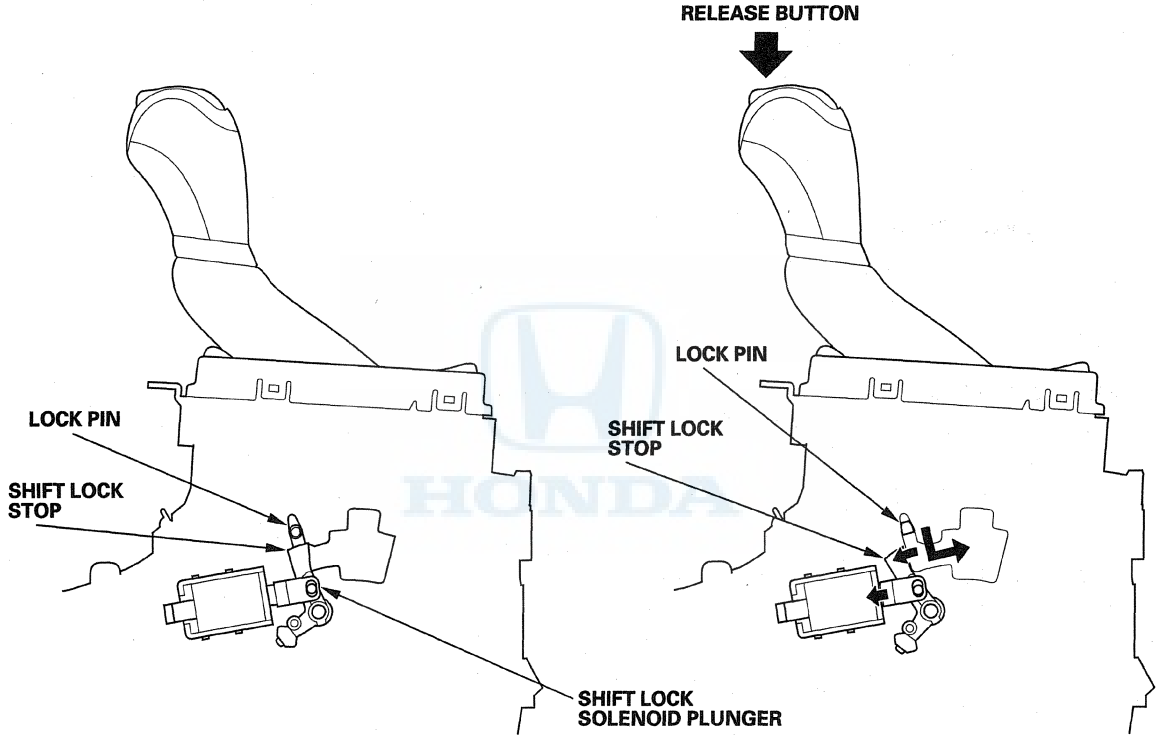

SHIFT LOCK SOLENOID: OFF

SHIFT LOCK SOLENOID: ON

(cont'd)

System Description (cont'd)

Electronic Control System (cont'd)

Shift Lock Control (cont'd)

When a shift lock control system malfunction or a mechanical problem occurs, the shift lever can be shifted out of P temporarily by pressing the shift lock release with the built-in key or a screwdriver. Pushing the shift lock release releases the shift lock stop, and allow the shift lever to be shifted out of P.

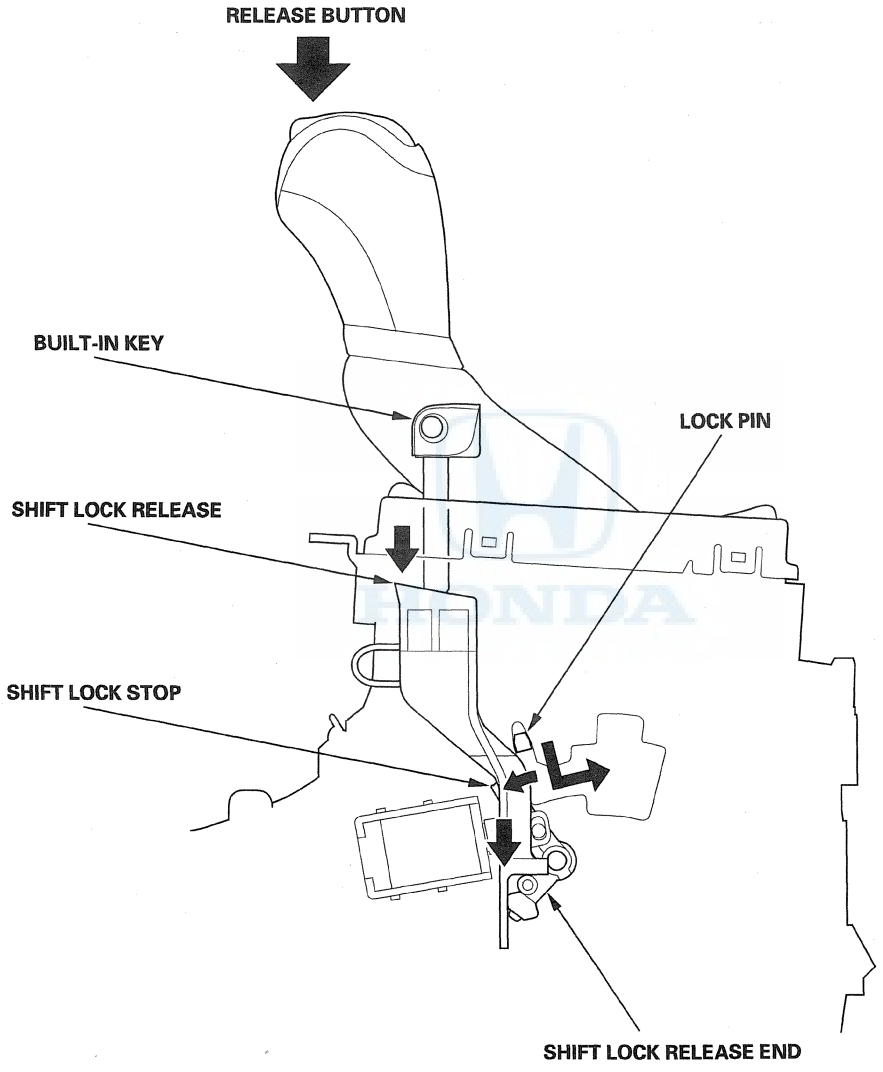

Self-diagnosis
If the PCM detects the failure of a signal from a sensor, a switch, a solenoid valve, or from another control unit, it stores a Pending or Confirmed DTCs. Depending on the failure, a Confirmed DTC is stored in either the first or the second drive cycle. When a DTC is stored, the PCM blinks the D indicator and/or turns on the malfunction indicator lamp (MIL) by a signal sent to the gauge control module via F-CAN.

- **One Drive Cycle Detection Method**
  When an abnormality occurs in the signal from a sensor, a switch, a solenoid valve, or from another control unit, the PCM stores a Confirmed DTC for the failure and blinks the D indicator and/or turns on the MIL immediately.

- **Two Drive Cycle Detection Method**
  When an abnormality occurs in the signal from a sensor, a switch, a solenoid valve, or from another control unit in the first drive cycle, the PCM stores a Pending DTC. The D indicator and the MIL do not turns on at this time. If the failure continues in the second drive cycle, the PCM stores a Confirmed DTC and blinks the D indicator and/or turns on the MIL.

Fail-safe Function
When an abnormality occurs in the signal from a sensor, a switch, a solenoid valve, or from another control unit, the PCM ignores that signal and substitutes a pre-programmed value for that signal to allow the automatic transmission to continue operating. This causes a DTC to be stored and the D indicator to blink and/or the MIL to come on. The transmission may not shift normally during fail-safe operation. Do not run the test driving diagnosis when the MIL is ON, or the D indicator is blinking.

(cont'd)

System Description (cont'd)

Electronic Control System (cont'd)

PCM A/T Control System Electrical Connections

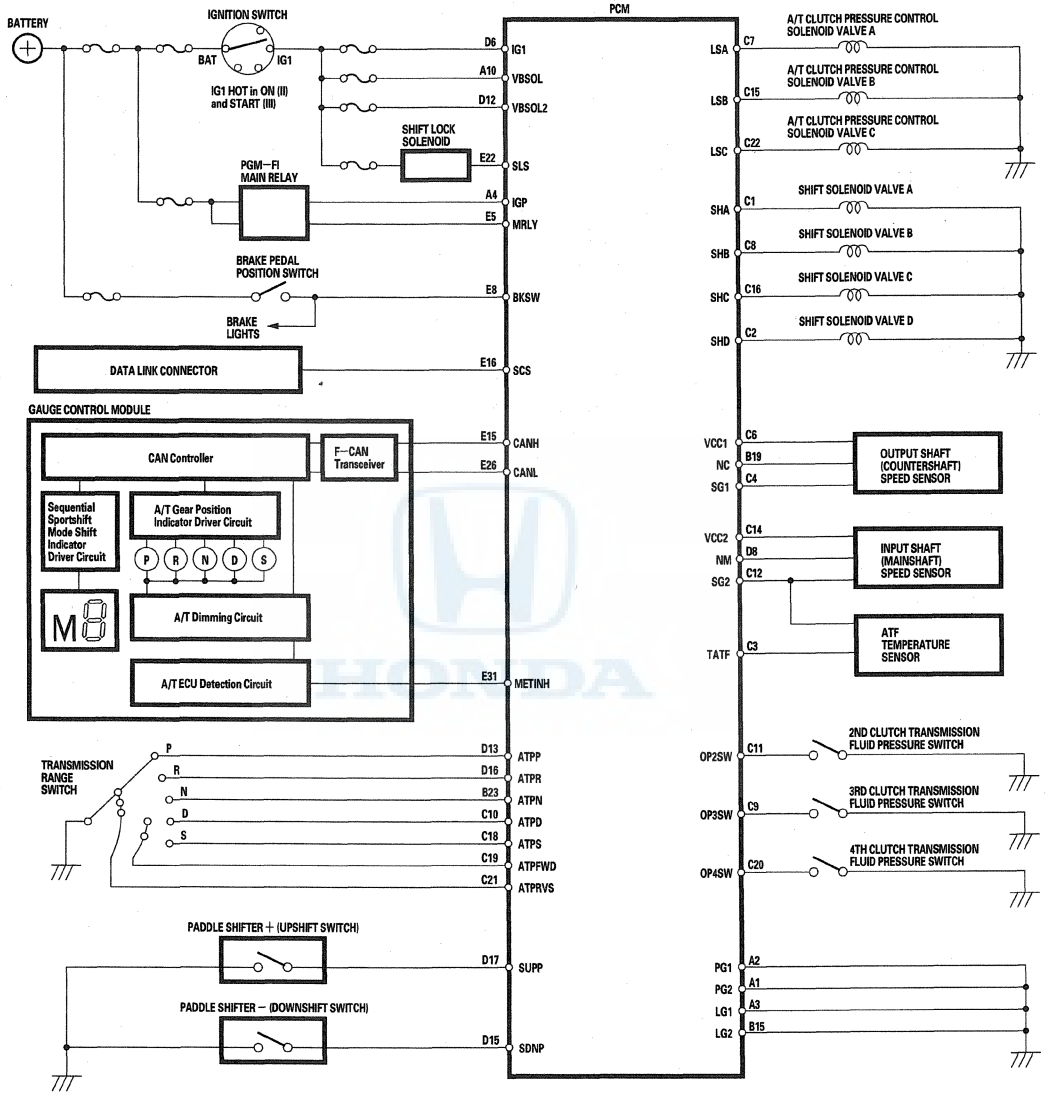

PCM Connector Terminal Locations

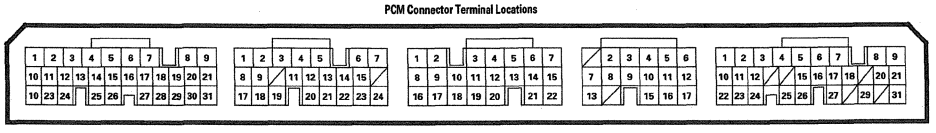

A (31P) B (24P) C (22P) D (17P) E (31P)

Wire side of female terminals

PCM A/T Control System Inputs and Outputs

PCM Connector Terminal Locations

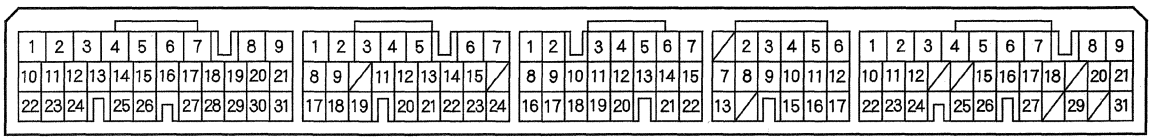

A (31P) **B (24P)** **C (22P)** **D (17P)** **E (31P)**

Wire side of female terminals

PCM CONNECTOR A (31P)

Terminal number	Wire color	Terminal name	Description	Signal
1	BLK	PG2 (POWER GROUND)	Ground circuit for PCM	Less than 1.0 V at all times
2	BLK	PG1 (POWER GROUND)	Ground circuit for PCM	Less than 1.0 V at all times
3	BRN/YEL	LG1 (LOGIC GROUND)	Ground circuit for PCM	Less than 1.0 V at all times
4	YEL/BLK	IGP (POWER SOURCE)	Power source for PCM	With ignition switch ON (II): battery voltage With ignition switch OFF: about 0 V
10	BLK/YEL	VBSOL (POWER SOURCE FOR SOLENOID VALVES)	Power source for solenoid valves	With ignition switch ON (II): battery voltage With ignition switch OFF: about 0 V

PCM CONNECTOR B (24P)

Terminal number	Wire color	Terminal name	Description	Signal
15	BRN/YEL	LG2 (LOGIC GROUND)	Ground circuit for PCM	Less than 1.0 V at all times
19	BLU	NC (OUTPUT SHAFT (COUNTERSHAFT) SPEED SENSOR)	Detects output shaft (countershaft) speed sensor signals	With ignition switch ON (II): about 0 V or about 5.0 V With driving: pulses
23	RED/BLK	ATPN (TRANSMISSION RANGE SWITCH N POSITION)	Detects transmission range switch N position signal	In N: about 0 V In any position other than N: battery voltage

PCM CONNECTOR C (22P)

Terminal number	Wire color	Terminal name	Description	Signal
1	BLU/YEL	SHA (SHIFT SOLENOID VALVE A)	Drives shift solenoid valve A	With engine running in D (in 2nd and 3rd gears), S (in 2nd and 3rd gears), and R: battery voltage With engine running in P, N, D (in 1st, 4th, and 5th gears), and S (in 1st, 4th, and 5th gears): about 0 V
2	GRN/RED	SHD (SHIFT SOLENOID VALVE D)	Drives shift solenoid valve D	With engine running in N and D: about 0 V With engine running in P, N, and D: battery voltage In any other position: depending on conditions

(cont'd)

System Description (cont'd)

Electronic Control System (cont'd)

PCM A/T Control System Inputs and Outputs (cont'd)

PCM Connector Terminal Locations

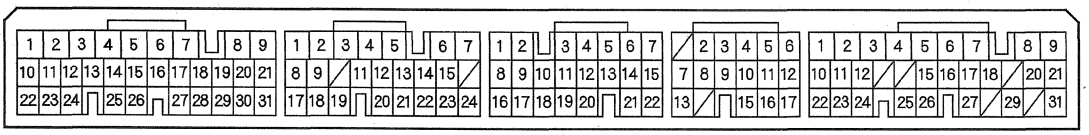

A (31P) B (24P) C (22P) D (17P) E (31P)

Wire side of female terminals

PCM CONNECTOR C (22P)

Terminal number	Wire color	Terminal name	Description	Signal
3	BLU/YEL	TATF (ATF TEMPERATURE SENSOR)	Detects ATF temperature sensor signal	With ignition switch ON (II): about 0.2—4.0 V (depending on ATF temperature)
4	GRN/WHT	SG1 (SENSOR GROUND)	Sensor ground	Less than 1.0 V at all times
6	YEL/RED	VCC1 (SENSOR VOLTAGE)	Provides sensor voltage	With ignition switch ON (II): about 5.0 V With ignition switch OFF: about 0 V
7	RED	LSA (A/T CLUTCH PRESSURE CONTROL SOLENOID VALVE A)	Drives A/T clutch pressure control solenoid valve A	With ignition switch ON (II): pulses
8	GRN/WHT	SHB (SHIFT SOLENOID VALVE B)	Drives shift solenoid valve B	With engine running in P, R, N, D (in 1st, 2nd, and 5th gears), and S (in 1st, 2nd, and 5th gears): battery voltage With engine running in D (in 3rd and 4th gears) and S (in 3rd and 4th gears): about 0 V
9	BLU/WHT	OP3SW (3RD CLUTCH TRANSMISSION FLUID PRESSURE SWITCH)	Detects 3rd clutch transmission fluid pressure switch input signal	With ignition switch ON (II): • Without 3rd clutch pressure: about 5.0 V • With 3rd clutch pressure: about 0 V
10	YEL/GRN	ATPD (TRANSMISSION RANGE SWITCH D POSITION)	Detects transmission range switch D position input signal	In D: about 0 V In any position other than D: battery voltage
11	BLU/BLK	OP2SW (2ND CLUTCH TRANSMISSION FLUID PRESSURE SWITCH)	Detects 2nd clutch transmission fluid pressure switch input signal	With ignition switch ON (II): • Without 2nd clutch pressure: about 5.0 V • With 2nd clutch pressure: about 0 V
12	GRN/YEL	SG2 (SENSOR GROUND)	Sensor ground	Less than 1.0 V at all times
14	YEL/BLU	VCC2 (SENSOR VOLTAGE)	Provides sensor voltage	With ignition switch ON (II): about 5.0 V With ignition switch OFF: about 0 V
15	BRN/WHT	LSB (A/T CLUTCH PRESSURE CONTROL SOLENOID VALVE B)	Drives A/T clutch pressure control solenoid valve B	With ignition switch ON (II): pulses
16	GRN	SHC (SHIFT SOLENOID VALVE C)	Drives shift solenoid valve C	With engine running in D (in 1st, 3rd, and 5th gears) and S (in 1st, 3rd, and 5th gears): battery voltage With engine running in P, R, N, D (in 2nd and 4th gears), and S (in 2nd and 4th gears): about 0 V
18	RED	ATPS (TRANSMISSION RANGE SWITCH S)	Detects transmission range switch S input signal	In S: about 0 V In any position other than S: battery voltage
19	BLU/YEL	ATPFWD (TRANSMISSION RANGE SWITCH FWD POSITION)	Detects transmission range switch signal D and S position input signal	In D and S: about 0 V In any position other than D and S: battery voltage
20	BLU/YEL	OP4SW (4TH CLUTCH TRANSMISSION FLUID PRESSURE SWITCH)	Detects 4th clutch transmission fluid pressure switch input signal	With ignition switch ON (II): • Without 4th clutch pressure: about 5.0 V • With 4th clutch pressure: about 0 V
21	RED/WHT	ATPRVS (TRANSMISSION RANGE SWITCH RVS POSITION)	Detects transmission range switch P, R, and N position input signal	In P, R, and N: about 0 V In any position other than P, R, and N: battery voltage
22	GRN/RED	LSC (A/T CLUTCH PRESSURE CONTROL SOLENOID VALVE C)	Drives A/T clutch pressure control solenoid valve C	With ignition switch ON (II): pulses

PCM CONNECTOR D (17P)

Terminal number	Wire color	Terminal name	Description	Signal
6	YEL	IG1 (IGNITION SIGNAL)	Detects ignition signal	With ignition switch ON (II): battery voltage With ignition switch OFF: about 0 V
8	RED	NM (INPUT SHAFT (MAINSHAFT) SPEED SENSOR)	Detects input shaft (mainshaft) speed sensor signal	With ignition switch ON (II): about 0 V or about 5.0 V With engine running in N: about 2.5 V
12	ORN	VBSOL2 (POWER SOURCE FOR SOLENOID VALVES)	Power source for solenoid valves	With ignition switch ON (II): battery voltage With ignition switch OFF: about 0 V
13	GRN	ATPP (TRANSMISSION RANGE SWITCH P POSITION)	Detects transmission range switch P position input signal	In P: about 0 V In any position other than P: battery voltage
15	PUR	SDNP (PADDLE SHIFTER − (DOWNSHIFT SWITCH))	Detects paddle shifter − (downshift switch) signal	With ignition switch ON (II): • Paddle shifter − (downshift switch) pressed: about 0 V • Paddle shifter − (downshift switch) released: battery voltage
16	PUR	ATPR (TRANSMISSION RANGE SWITCH R POSITION)	Detects transmission range switch R position input signal	In R: about 0 V In any position other than R: battery voltage
17	BLU	SUPP (PADDLE SHIFTER + (UPSHIFT SWITCH))	Detects paddle shifter + (upshift switch) signal	With ignition switch ON (II): • Paddle shifter + (upshift switch) pressed: about 0 V • Paddle shifter + (upshift switch) released: battery voltage

PCM CONNECTOR E (31P)

Terminal number	Wire color	Terminal name	Description	Signal
5	GRN	MRLY (PGM-FI MAIN RELAY)	Drives PGM-FI main relay 1 (FI MAIN) Power source for DTC memory	With ignition switch ON (II): about 0 V With ignition switch OFF: battery voltage
8	LT GRN	BKSW (BRAKE PEDAL POSITION SWITCH)	Detects brake pedal position switch signal	With brake pedal released: about 0 V With brake pedal pressed: battery voltage
15	WHT	CANH (CAN COMMUNICATION SIGNAL HIGH)	Sends communication signal	With ignition switch ON (II): pulses
16	BRN	SCS (SERVICE CHECK SIGNAL)	Detects service check signal	With the service check signal shorted with the HDS: about 0 V With the service check signal opened: about 5.0 V
22	PNK	SLS (SHIFT LOCK SOLENOID)	Drives shift lock solenoid	With ignition switch ON (II), in P, brake pedal pressed, and accelerator released: about 0 V
26	RED	CANL (CAN COMMUNICATION SIGNAL LOW)	Sends communication signal	With ignition switch ON (II): pulses
31	GRN	METINH (METER DISPLAY INHIBIT SIGNAL)	Sends A/T shift position inhibit signal	With ignition switch ON (II): about 10.0 V

System Description (cont'd)

Hydraulic Controls

The valve body includes the main valve body, the regulator valve body, the secondary valve body, and the accumulator body. The ATF pump is driven by splines on the end of the torque converter which is attached to the engine. Fluid flows through the regulator valve to maintain specified pressure through the main valve body to the manual valve, directing pressure to each of the clutches. The shift solenoid valves A, B, C, and D are mounted on the accumulator body. The A/T clutch pressure control solenoid valves A, B, and C are mounted on the transmission housing.

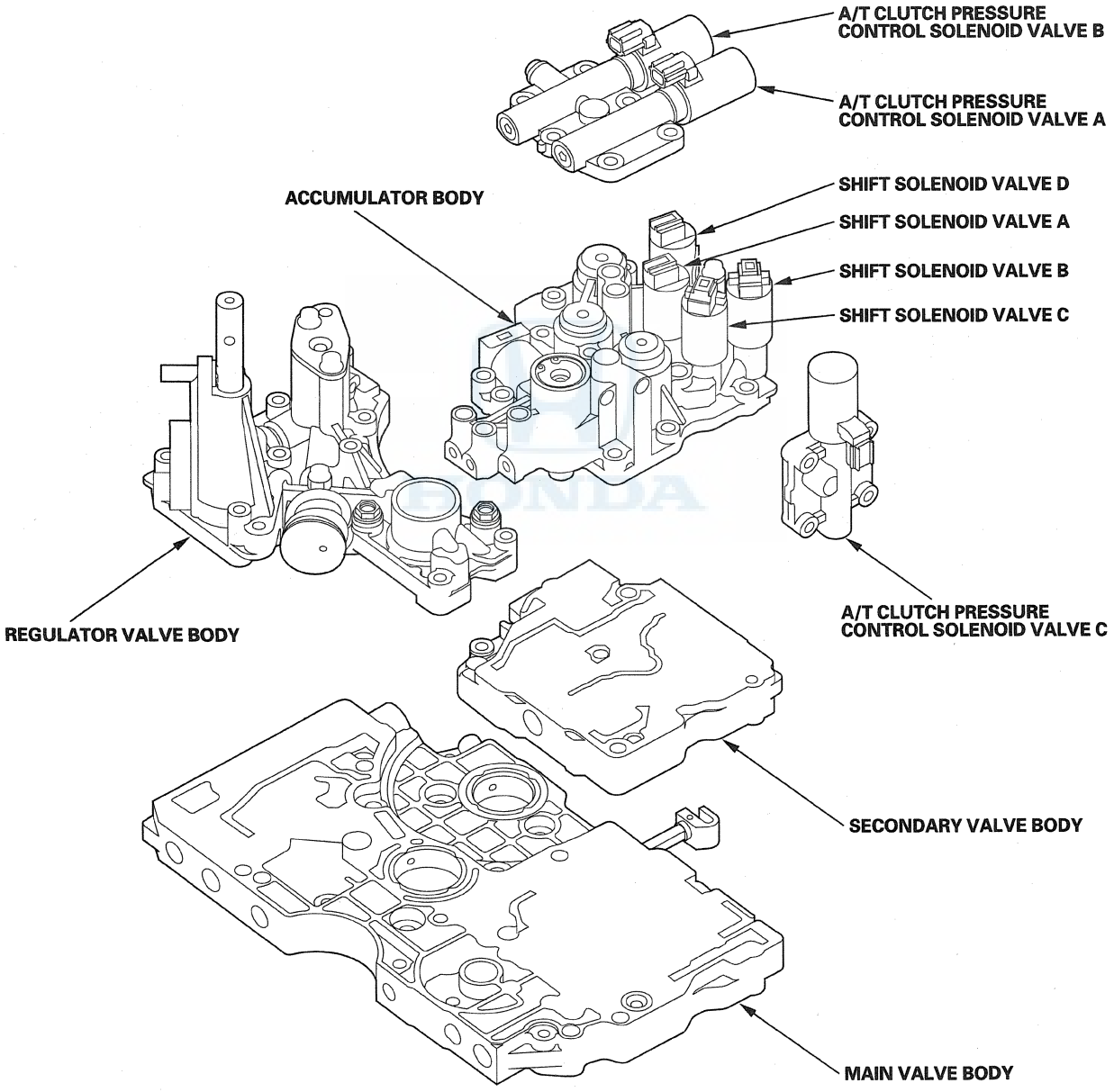

Main Valve Body

The main valve body contains the manual valve, the modulator valve, the torque converter check valve, the shift valve A, the shift valve B, the shift valve E, the CPC valve A, the servo control valve, the relief valve, the lock-up shift valve, the lock-up timing valve, the lubrication control valve, the lubrication check valve, and the ATF pump gears. The primary function of the main valve body is to switch fluid pressure on and off to control hydraulic pressure going to the hydraulic control system.

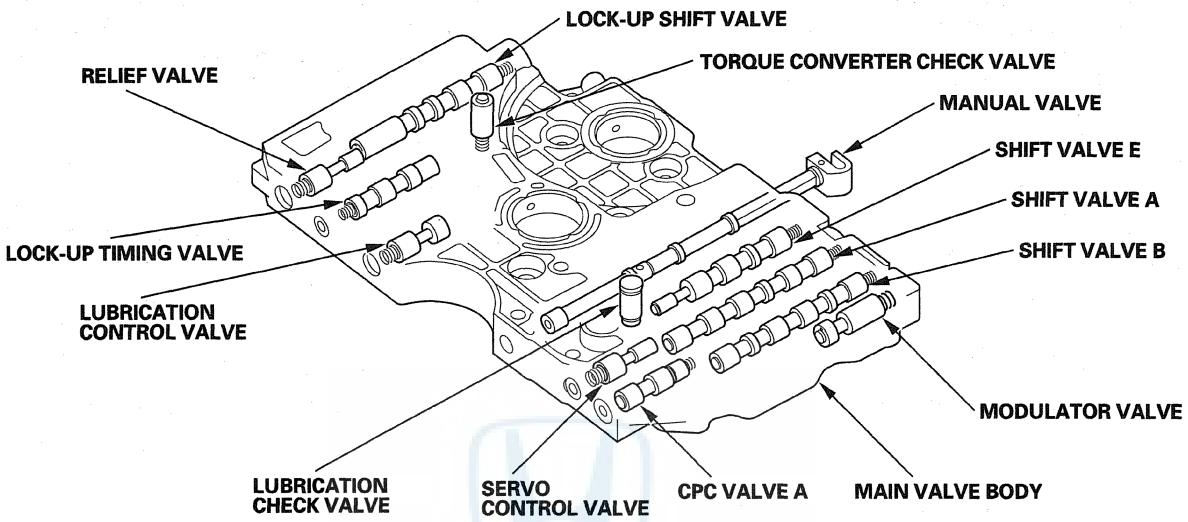

Regulator Valve Body

The regulator valve body is located on the main valve body. The regulator valve body contains the regulator valve, the cooler check valve, the lock-up control valve, the servo valve, and the 3rd accumulator.

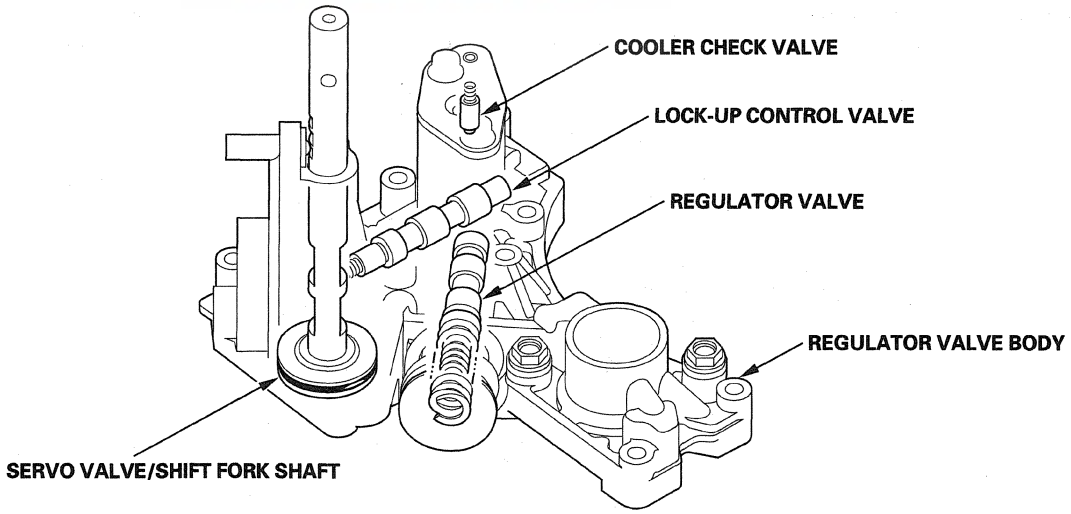

(cont'd)

System Description (cont'd)

Hydraulic Controls (cont'd)

Regulator Valve

The regulator valve maintains constant hydraulic pressure from the ATF pump to the hydraulic control system, while also furnishing fluid to the lubrication system and torque converter. Fluid from the ATF pump flows through B and B'. Fluid entering from B flows through the valve orifice to the A cavity. This pressure of the A cavity pushes the regulator valve to the spring side, and this movement of the regulator valve uncovers the fluid port to the torque converter and the relief valve. The fluid flows out to the torque converter and the relief valve, and the regulator valve returns under spring force. According to the level of the hydraulic pressure through B, the position of the regulator valve changes, and the amount of fluid from B' through the torque converter changes. This operation is continued, maintaining the line pressure.

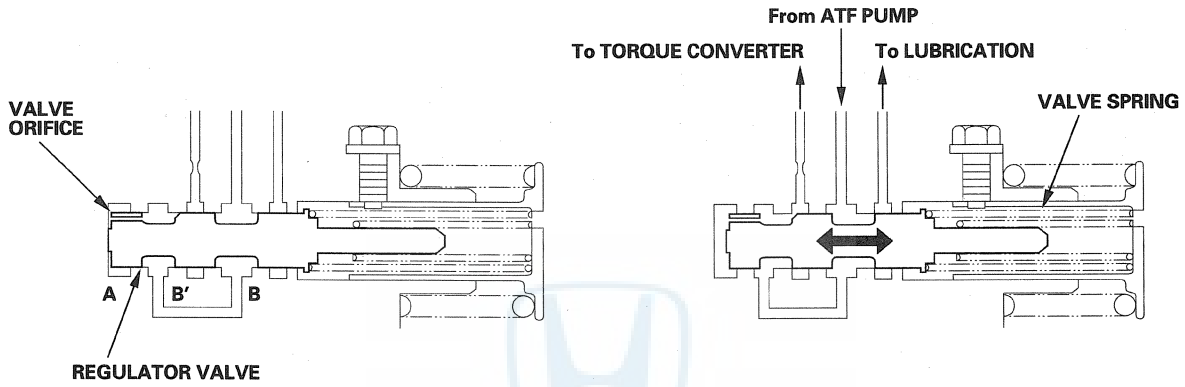

Increases in hydraulic pressure according to torque are regulated by the regulator valve using stator torque reaction. The stator shaft is splined to the stator in the torque converter, and its arm end contacts the regulator spring cap. When the vehicle is accelerating or climbing (torque converter range), stator torque reaction acts on the stator shaft, and the stator arm pushes the regulator spring cap in the direction of the arrow in proportion to the reaction. The stator reaction spring compresses, and the regulator valve moves to increase the line pressure which is regulated by the regulator valve. The line pressure reaches its maximum when the stator torque reaction reaches its maximum.

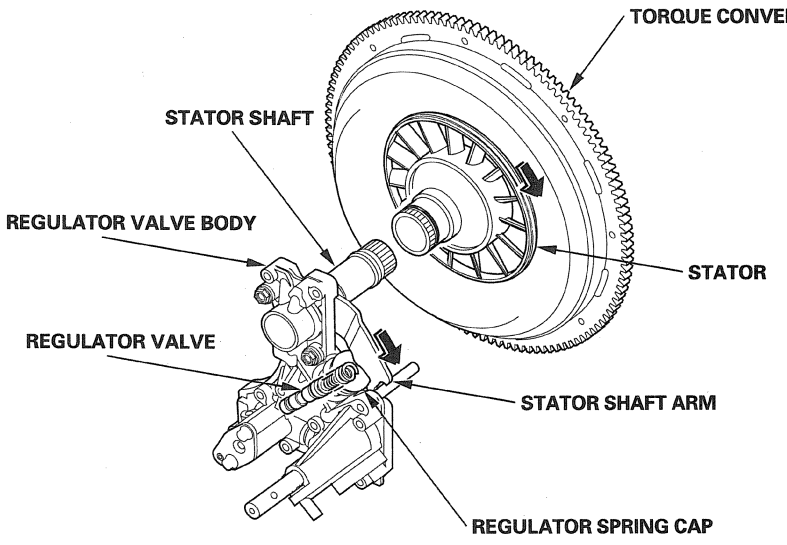

Secondary Valve Body

The secondary valve body is on the main valve body. The secondary valve body contains the shift valve C, the shift valve D, the CPC valve B, the CPC valve C, the reverse control valve, and the reverse CPC valve.

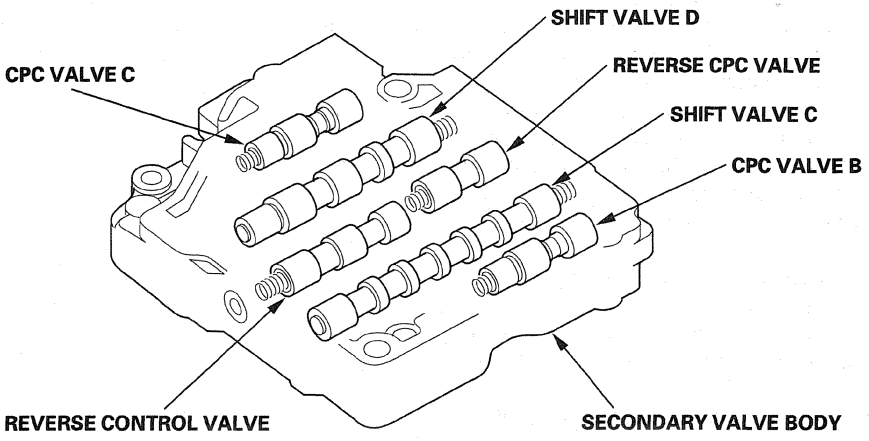

Accumulator Body

The accumulator body is on the secondary valve body, and contains the 1st, 1st-hold, 2nd, 4th, and 5th accumulators. The 3rd accumulator is in the regulator valve body.

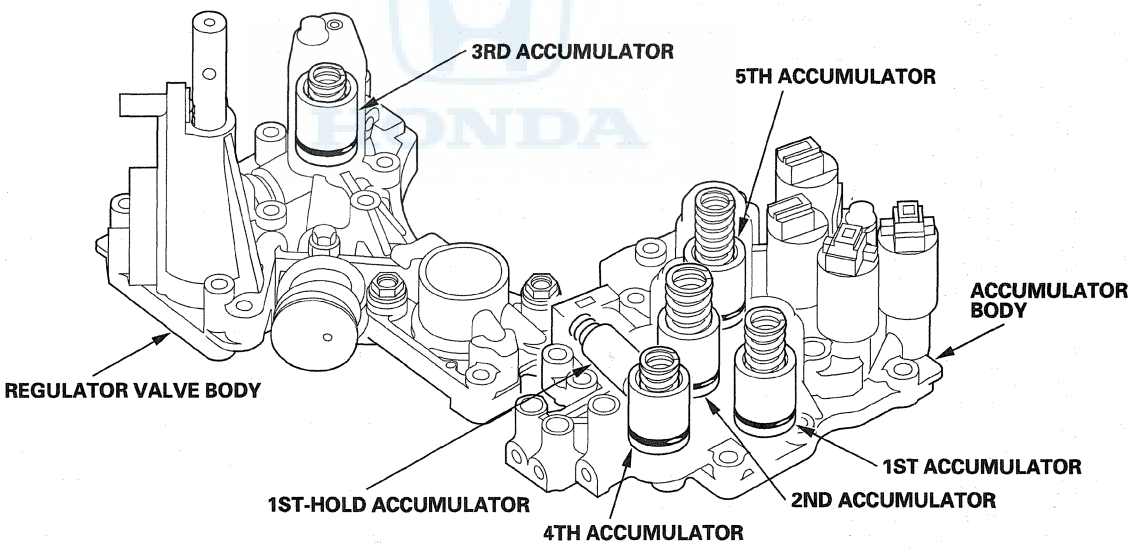

System Description (cont'd)

Hydraulic Flow

Distribution of Hydraulic Pressure

As the engine turns, the ATF pump starts to operate. Automatic transmission fluid (ATF) is drawn through the ATF strainer (filter) and discharged into the hydraulic circuit. Then, ATF flowing from the ATF pump becomes line pressure that is regulated by the regulator valve. Torque converter pressure from the regulator valve enters the torque converter through the lock-up shift valve and lock-up control valve, and it is discharged from the torque converter. The torque converter check valve prevents torque converter pressure from rising.

The PCM switches shift solenoid valves A, B, C, and D ON and OFF, and the shift solenoid valves control shift solenoid pressure to the shift valves. Applying shift solenoid pressure to the shift valves moves the position of the shift valve, and switches the port of hydraulic pressure. The PCM also controls A/T clutch pressure control solenoid valves A, B, and C. The A/T clutch pressure control solenoid valves regulate hydraulic pressure, and apply the pressure to CPC valves A, B, and C.

When shifting between gears, the clutches are engaged by pressure from the CPC pressure mode. The PCM actuates one of the shift solenoid valves to move the position of the shift valve. This movement switches the port of CPC pressure and line pressure. Line pressure is then applied to the clutch, and CPC pressure is released. The clutch is engaged with line pressure after shifting is completed.

Hydraulic Pressure at the Port for use in the hydraulic circuit:

Port	Hydraulic pressure	Port	Hydraulic pressure
1	Line	SC	Shift solenoid valve C
2	Line	SC'	Shift solenoid valve C
3	Line	SD	Shift solenoid valve D
3'	Line	10	1st clutch
3''	Reverse CPC or Line	15	1st-hold clutch
3A	Line	20	2nd clutch
3B	Reverse CPC	30	3rd clutch
4	Line	40	4th clutch
4'	Line	50	5th clutch
4''	Line	51	5th clutch
4A	CPC A	56	A/T clutch pressure control solenoid valve A
4B	CPC B	57	A/T clutch pressure control solenoid valve B
4C	CPC C	5R	A/T clutch pressure control solenoid valve B
5A	CPC A	58	A/T clutch pressure control solenoid valve C
5B	CPC A or Line	90	Torque converter
5C	CPC B or Line	90'	Torque converter
5D	CPC B	91	Torque converter
5E	CPC C	91'	Torque converter
5F	CPC C	92	Torque converter
5G	CPC C	93	ATF cooler
5H	CPC B or Line	94	Torque converter
5J	CPC B or Line	95	Lubrication
5K	CPC A or Line	95'	Lubrication
5L	CPC A or Line	96	Torque converter
5M	Line	99	Suction
5N	CPC C	X	Drain
6	Modulator	HX	High position drain
SA	Shift solenoid valve A	AX	Air drain
SB	Shift solenoid valve B	—	—

N Position

Line pressure (1) regulated by the regulator valve flows to shift solenoid valves. The PCM switches the shift solenoid valves ON and OFF. The conditions of the shift solenoid valves and the positions of the shift valves are as follows:

- Shift solenoid valve A is OFF, and closes shift solenoid valve A pressure port (SA); shift valve A remains on the left side.
- Shift solenoid valve B is turned ON, and closes shift solenoid valve B pressure port (SB); shift valve B and shift valve E remain on the left side.
- Shift solenoid valve C is OFF, and opens shift solenoid valve C pressure port (SC); shift valve C and shift valve D move to the right side.
- Shift solenoid valve D is OFF, and closes shift solenoid valve D pressure port (SD).

Line pressure (1) also flows to the modulator valve and becomes modulator pressure (6). Modulator pressure (6) flows to the A/T clutch pressure control solenoid valves. The manual valve covers the port leading pressure to the clutches, and hydraulic pressure is not applied to the clutches.

NOTE: When used, "left" or "right" indicates direction on the hydraulic circuit.

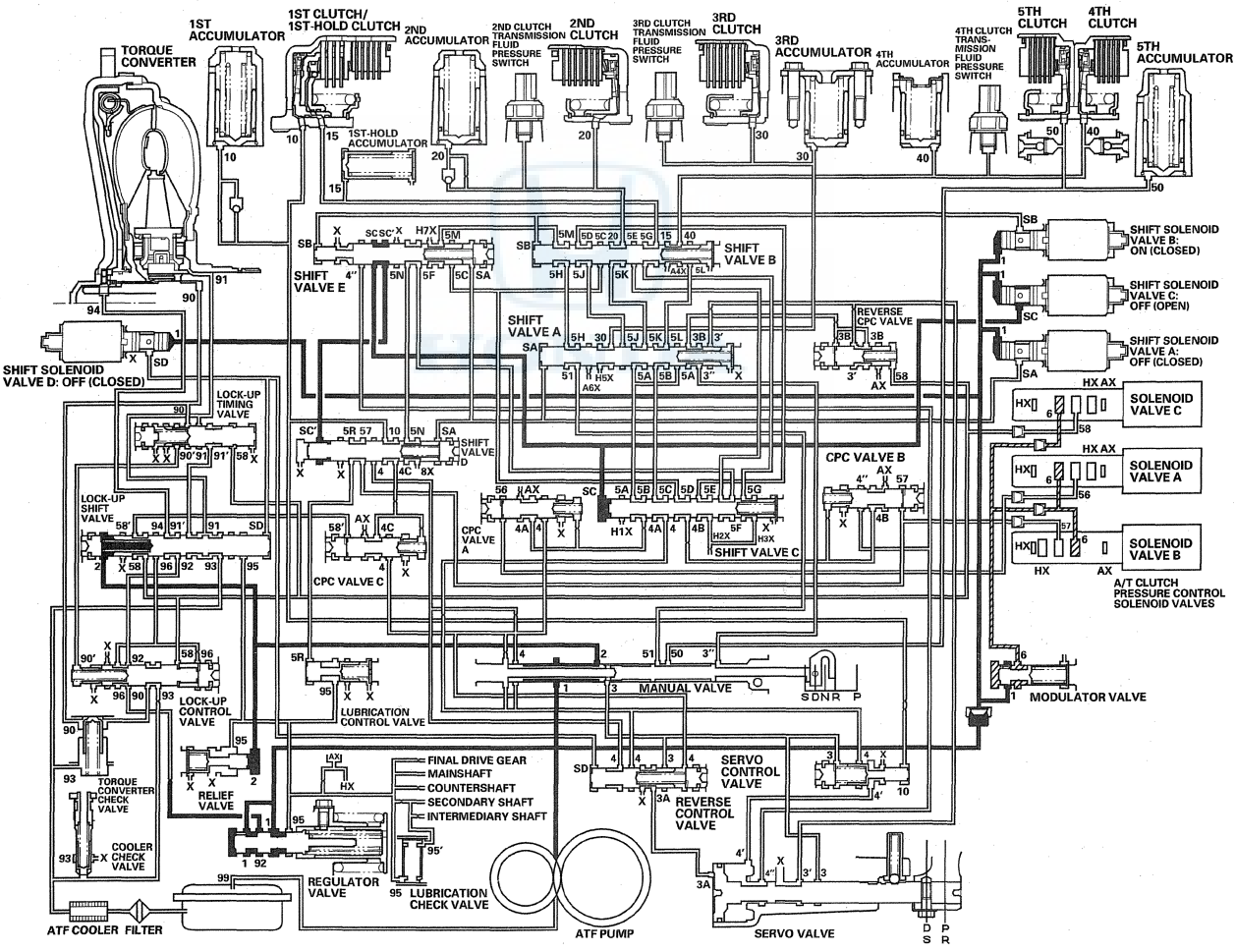

(cont'd)

System Description (cont'd)

Hydraulic Flow (cont'd)

Shifting to D and S from N

When shifting to the D or S from N, the condition of the shift solenoid valves remains the same as in N. The manual valve is moved to the D position, and uncovers the line pressure port (4) leading to CPC valves A and C. The PCM actuates the A/T clutch pressure control solenoid valves A and C, A/T clutch pressure control solenoid valve A pressure (56) flows to the CPC valve A, and A/T clutch pressure control solenoid valve C pressure (58) flows to the CPC valve C. CPC valves A and C regulate line pressure (4), line pressure (4) becomes CPC C pressure (4C) at the CPC valve C, and becomes CPC A pressure at CPC valve A. CPC C pressure (4C) becomes 1st clutch pressure (10) at shift valve D, and 1st clutch pressure flows to the 1st clutch. CPC A pressure (4A) becomes 2nd clutch pressure (20) at shift valve B via shift valves A and C. The 1st clutch and 2nd clutch engage gently by the CPC pressure.

NOTE: When used, "left" or "right" indicates direction on the hydraulic circuit.

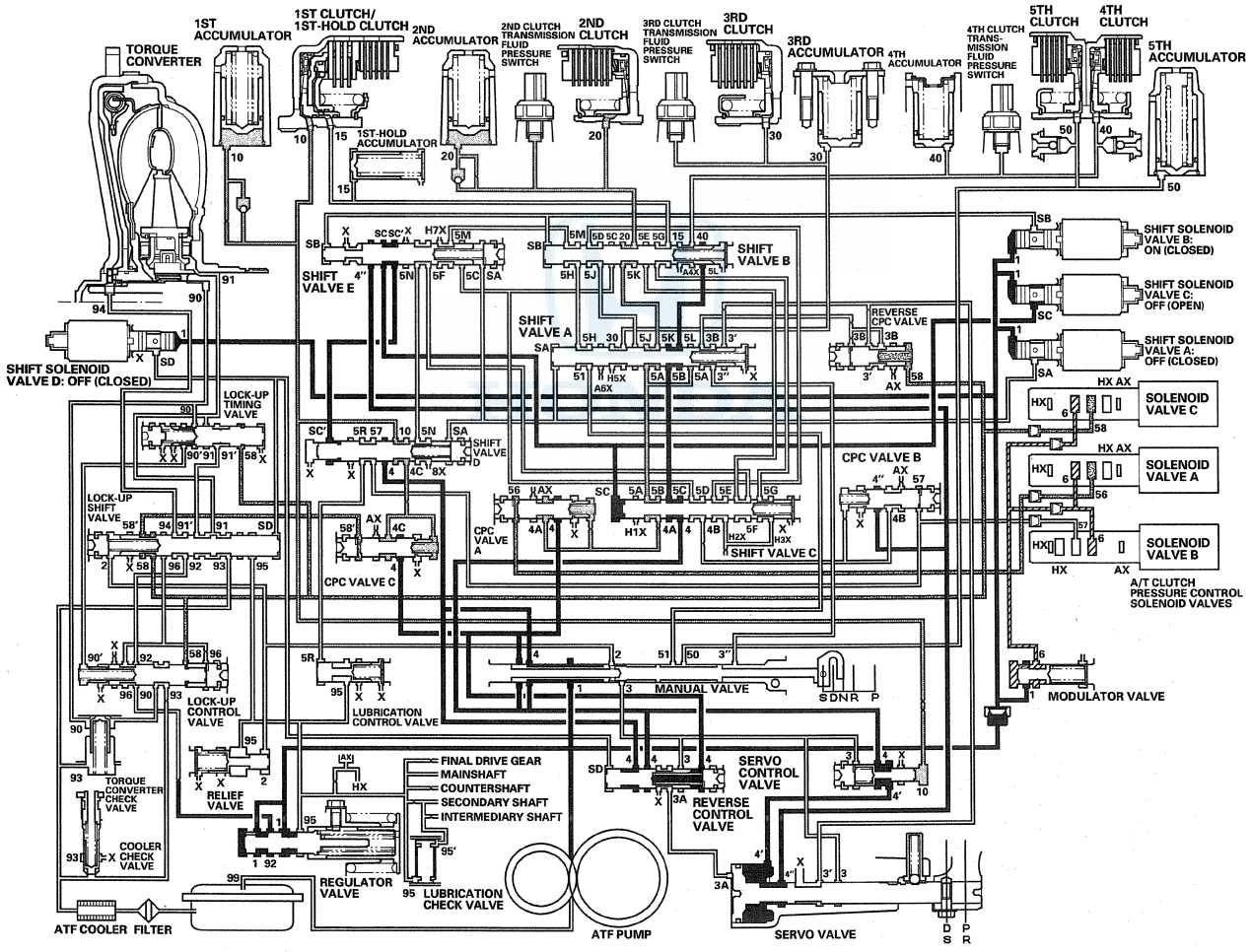

Driving in 1st gear in D and S with automatic shift mode

The PCM turns shift solenoid valve C ON, and shift solenoid valve C covers shift solenoid valve C pressure port (SC) to shift valve C, and shift valve D via shift valve E. Shift solenoid valve A remains OFF, and shift solenoid valve B remains ON. Shift valves C and D are moved to the left side, shift valve D switches the line pressure port (4) and CPC C pressure port (4C) leading to the 1st clutch, and shift valve C switches the CPC A pressure port (5A) releasing 2nd clutch pressure. Line pressure (4) becomes 1st clutch pressure (10) at shift valve D, and flows to the 1st clutch. The 1st clutch is engaged securely by the line pressure.

NOTE: When used, "left" or "right" indicates direction on the hydraulic circuit.

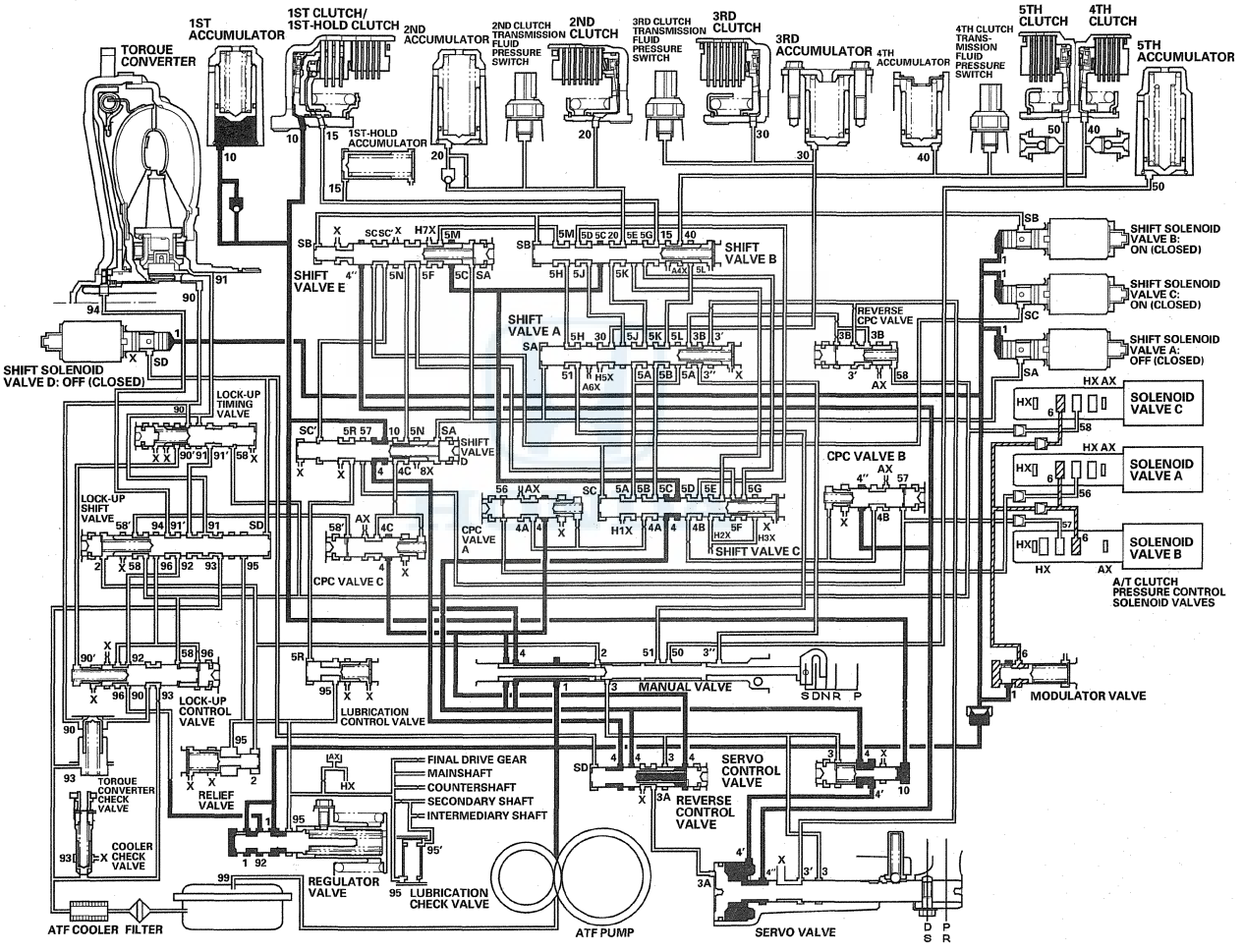

(cont'd)

System Description (cont'd)

Hydraulic Flow (cont'd)

Shifting between 1st gear and 2nd gear in D and S with automatic shift mode
As the speed of the vehicle reaches the programmed value, the PCM turns shift solenoid valve A ON, and shift solenoid valve A uncovers shift solenoid valve A pressure port (SA) to shift valve A. Shift solenoid valves B and C remain ON. Shift valve A is moved to the right side to uncover the CPC A pressure port (4A) leading to the 2nd clutch. The PCM actuates A/T clutch pressure control solenoid valve A, and A/T clutch pressure control solenoid valve A pressure (56) is applied to CPC valve A. CPC valve A regulates line pressure (4), and line pressure (4) becomes CPC A pressure (4A). CPC A pressure (4A) flows to shift valve B via shift valves C and A, and becomes 2nd clutch pressure (20) at shift valve B. The 2nd clutch is engaged by the CPC pressure. The 1st clutch is also engaged, but no power is transmitted because of the one-way clutch.

NOTE: When used, "left" or "right" indicates direction on the hydraulic circuit.

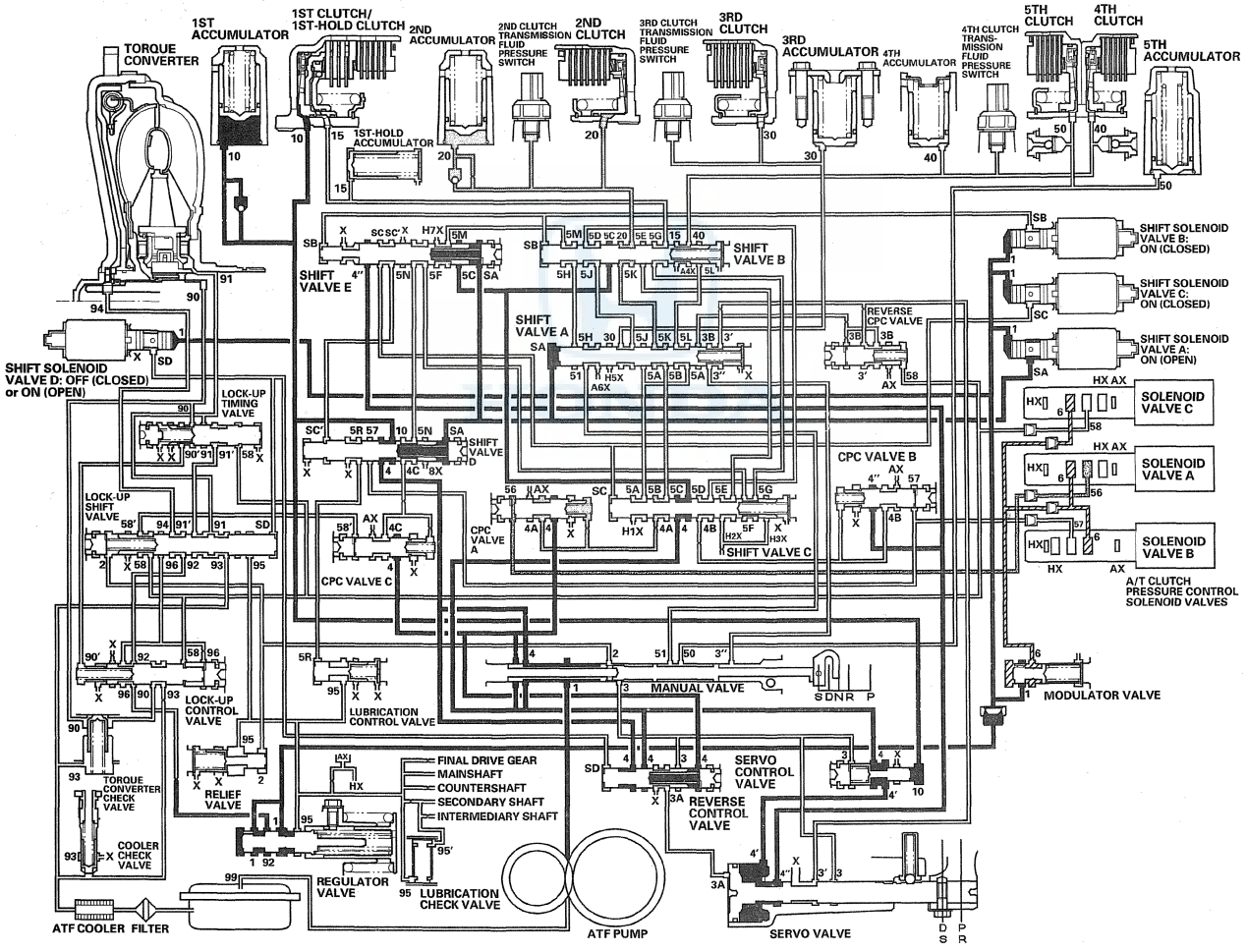

Driving in 2nd gear in D and S with automatic shift mode

The PCM turns shift solenoid valve C OFF, and shift solenoid valve C uncovers shift solenoid valve C pressure port (SC) to shift valve C. Shift solenoid valves A and B remain ON. Shift valve C is moved to the right side to switch the line pressure port (4) and CPC A pressure port (4A) leading to the 2nd clutch. CPC A pressure (5B) (5K) changes to line pressure (5B) (5K) and 2nd clutch pressure (20) is changed to line pressure mode, and the 2nd clutch is engaged by the line pressure. The 1st clutch is also engaged, but no power is transmitted because of the one-way clutch.

NOTE: When used, "left" or "right" indicates direction on the hydraulic circuit.

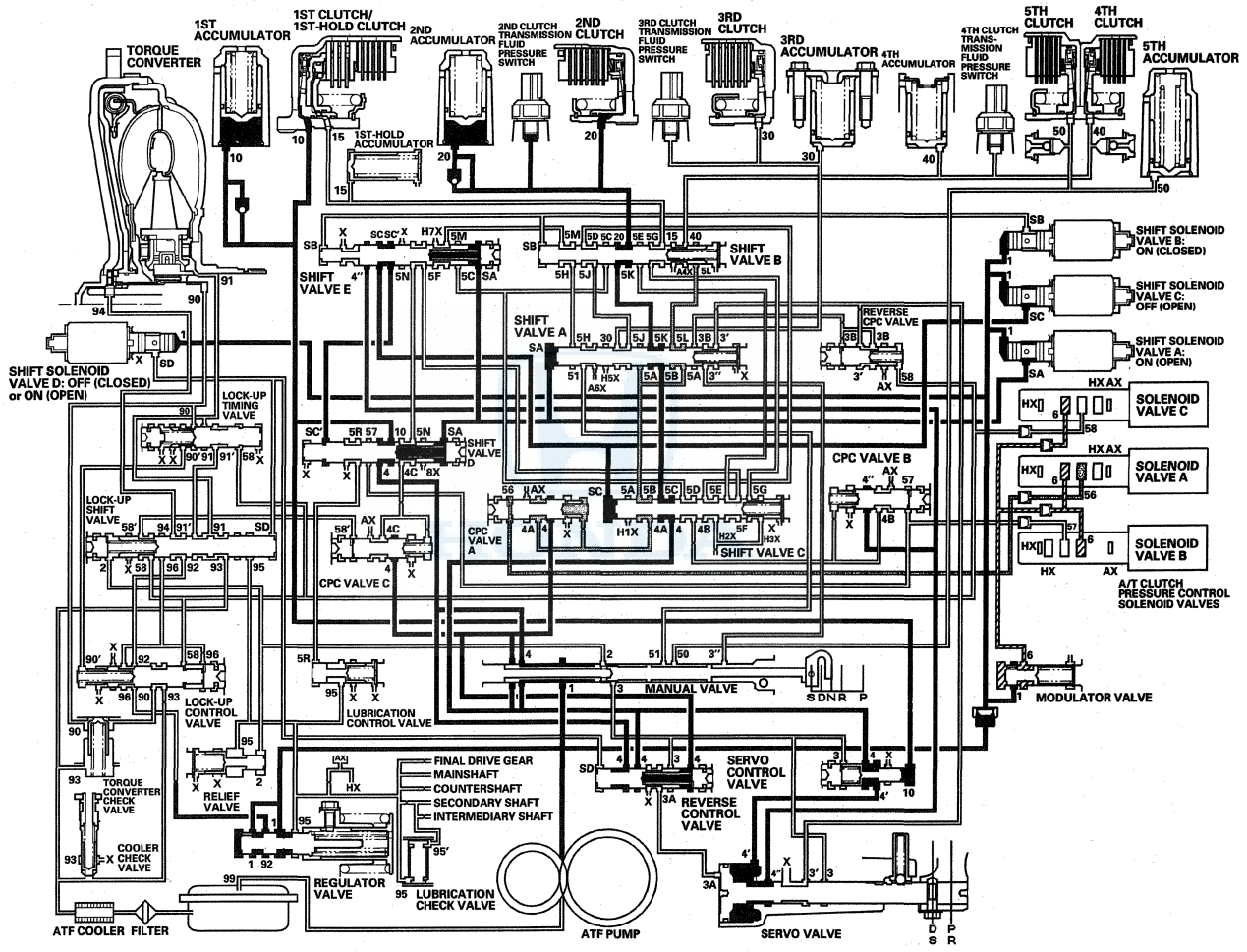

(cont'd)

System Description (cont'd)

Hydraulic Flow (cont'd)

Shifting between 2nd gear and 3rd gear in D and S with automatic shift mode
As the speed of the vehicle reaches the programmed value, the PCM turns shift solenoid valve C ON, and shift solenoid valve C covers shift solenoid valve C pressure port (SC) to shift valve C. Shift solenoid valves A and B remain ON. Shift valve C is moved to the left side to switch the line pressure port (4) and CPC A pressure port (4A) leading to the 2nd clutch. Shift valve C also uncovers the CPC B pressure port (4B) leading to the 3rd clutch. The PCM actuates A/T clutch pressure control solenoid valves A and B. A/T clutch pressure control solenoid valve A pressure (56) is applied to CPC valve A, and A/T clutch pressure control solenoid valve B pressure (57) is applied to CPC valve B. CPC valve B regulates line pressure (4''), and line pressure (4'') becomes CPC B pressure (4B). CPC B pressure flows to shift valve A via shift valves C and B, and becomes 3rd clutch pressure (30) at shift valve A. The 2nd clutch pressure (20) is changed to CPC pressure mode, and the 3rd clutch is engaged by the CPC pressure. The 1st clutch is also engaged, but no power is transmitted because of the one-way clutch.

NOTE: When used, "left" or "right" indicates direction on the hydraulic circuit.

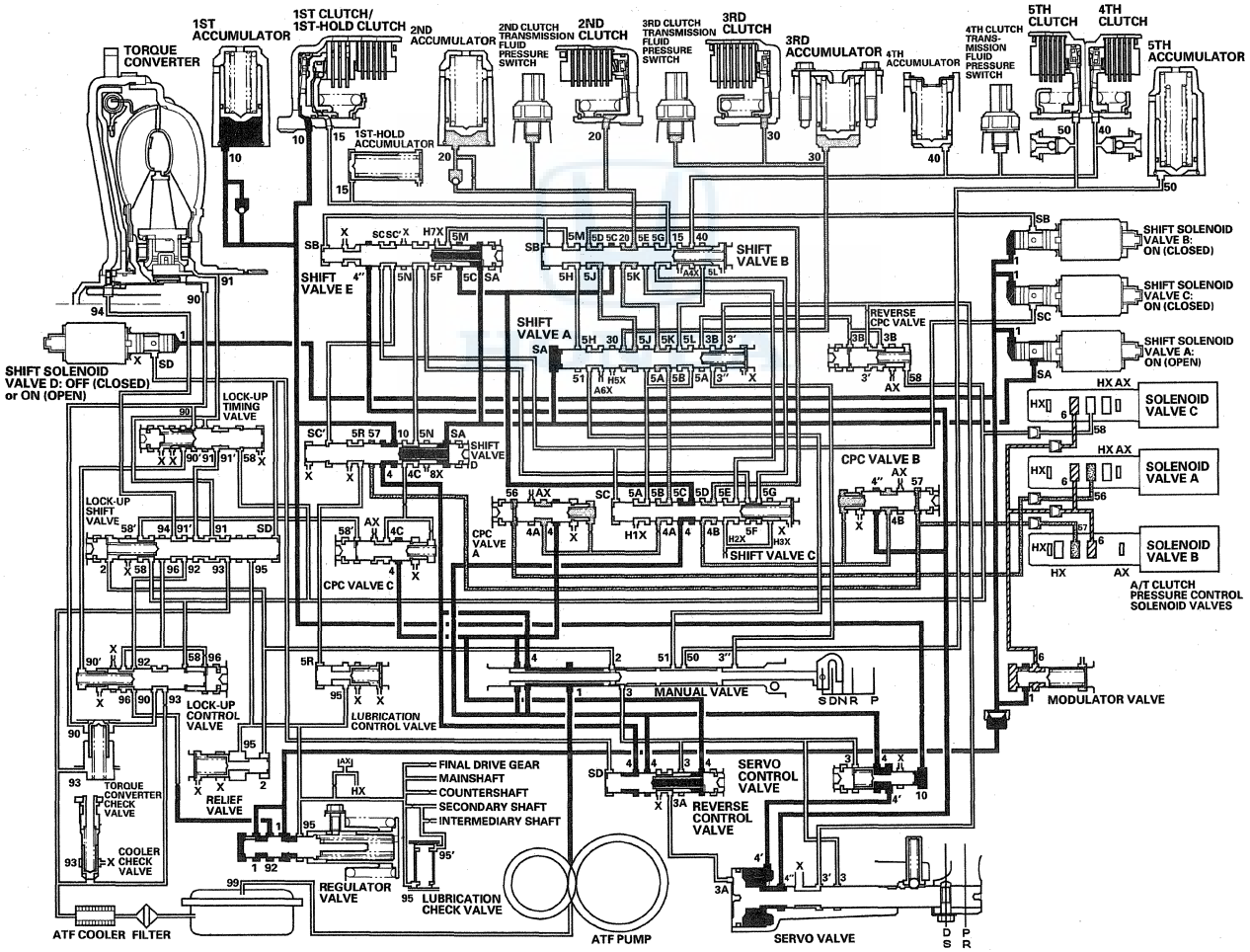

Driving in 3rd gear in D and S with automatic shift mode

The PCM turns shift solenoid valve B OFF, and shift solenoid valve B uncovers shift solenoid valve B pressure port (SB) to shift valve B. Shift solenoid valves A and C remain ON. Shift valve B is moved to the right side to switch the line pressure port (5C), CPC B pressure port (5J) leading to the 3rd clutch, and 2nd clutch pressure port (20) releasing 2nd clutch pressure. CPC B pressure (5J) changes to line pressure (5J) and 3rd clutch pressure (30) is changed to line pressure mode, and the 3rd clutch is engaged by the line pressure. The 1st clutch is also engaged, but no power is transmitted because of the one-way clutch.

NOTE: When used, "left" or "right" indicates direction on the hydraulic circuit.

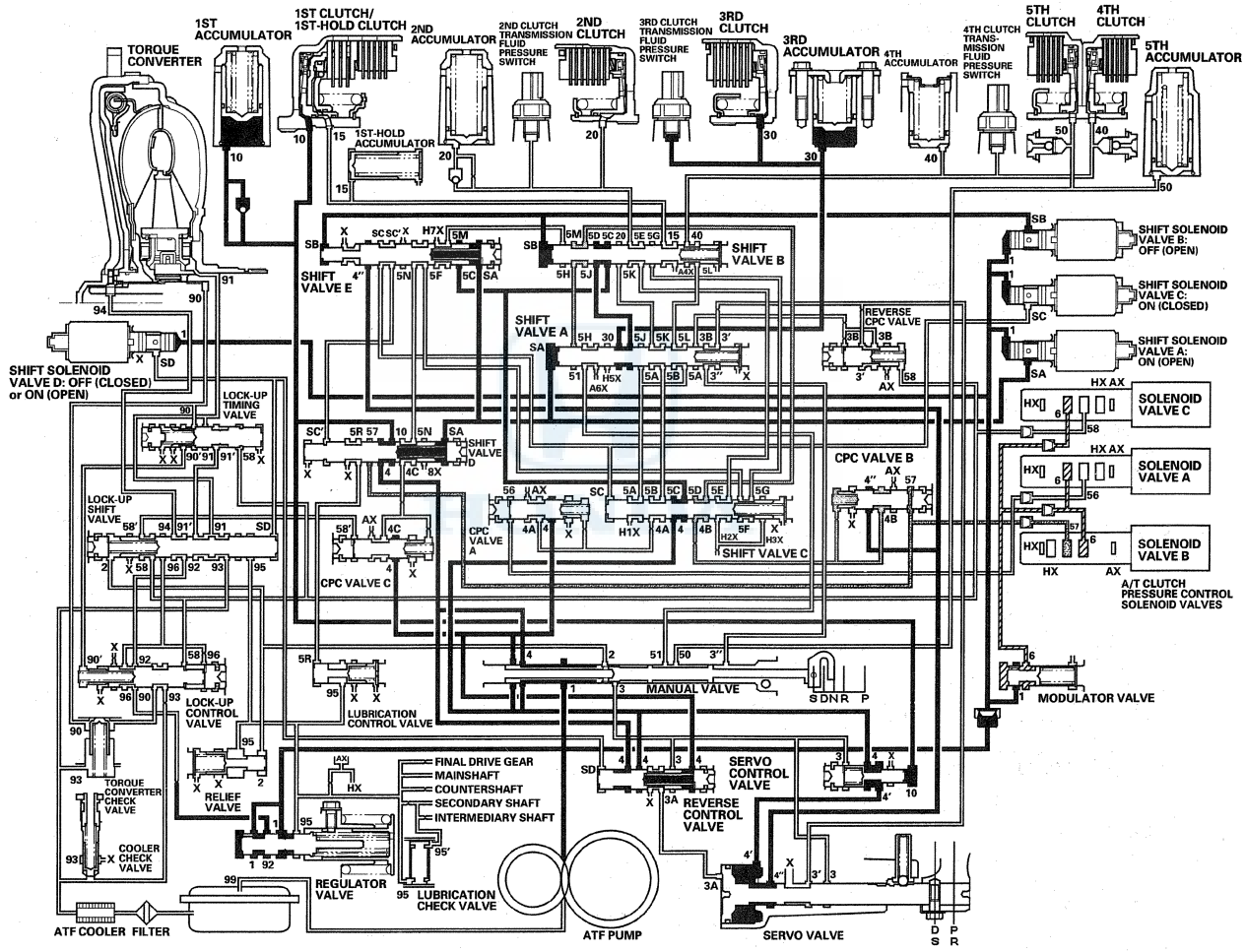

(cont'd)

System Description (cont'd)

Hydraulic Flow (cont'd)

Shifting between 3rd gear and 4th gear in D and S with automatic shift mode
As the speed of the vehicle reaches the programmed value, the PCM turns shift solenoid valve C OFF, and shift solenoid valve C uncovers shift solenoid valve C pressure port (SC) to shift valve C. Shift solenoid valve A remains ON, and shift solenoid valve B remains OFF. Shift valve C is moved to the right side to switch the line pressure port (4) and CPC B pressure port (4B) leading to the 3rd clutch. Shift valve C also uncovers the CPC A pressure port (4A) leading to the 4th clutch. The PCM actuates A/T clutch pressure control solenoid valves A and B. A/T clutch pressure control solenoid valve A pressure (56) is applied to CPC valve A, and A/T clutch pressure control solenoid valve B pressure (57) is applied to CPC valve B. CPC valve A regulates line pressure (4), and line pressure (4) becomes CPC A pressure (4A). CPC A pressure (4A) flows to shift valve B via shift valves C and A, and becomes 4th clutch pressure (40) at shift valve B. The 3rd clutch pressure (30) is changed to CPC pressure mode, and the 4th clutch is engaged by the CPC pressure. The 1st clutch is also engaged, but no power is transmitted because of the one-way clutch.

NOTE: When used, "left" or "right" indicates direction on the hydraulic circuit.

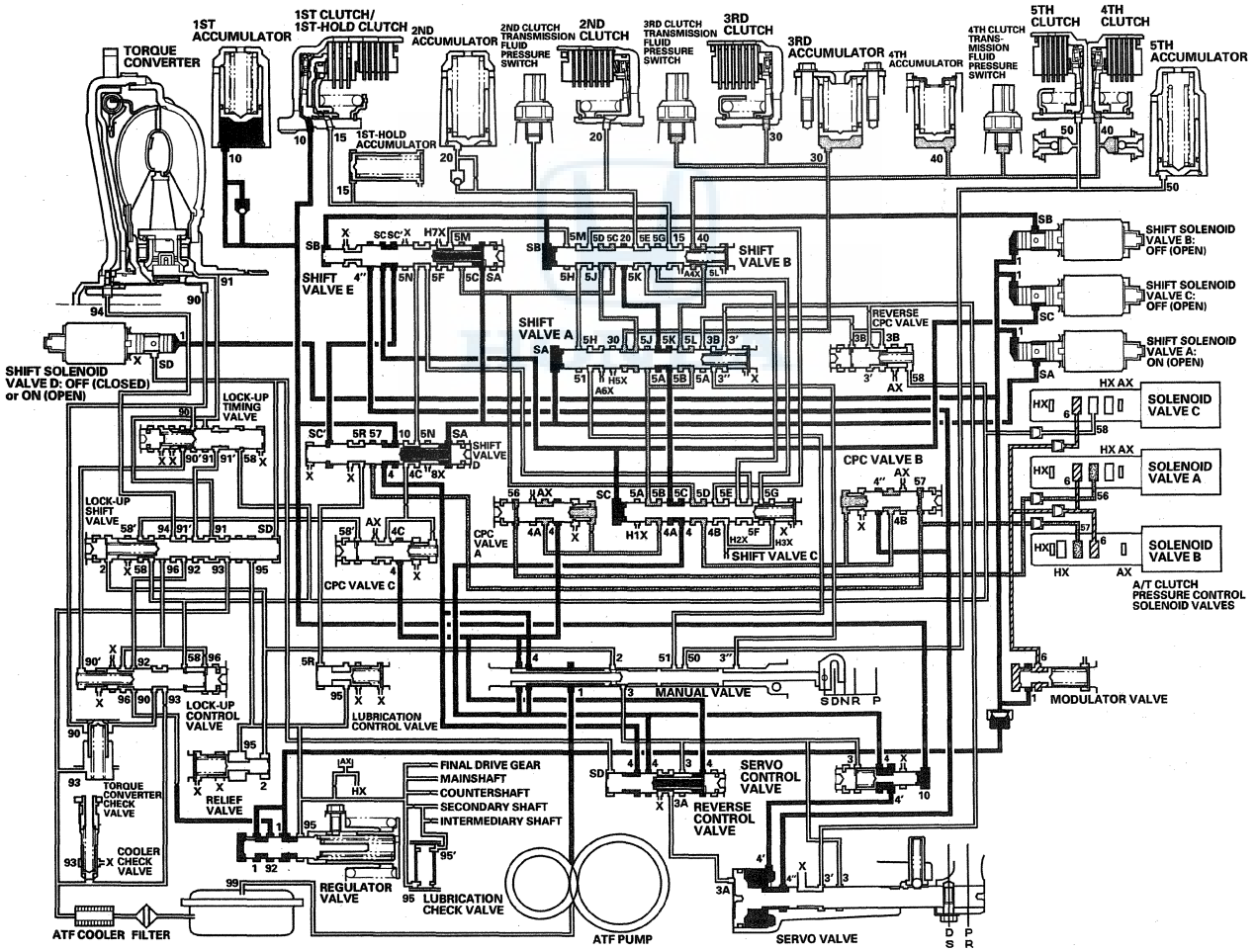

Driving in 4th gear in D and S with automatic shift mode

The PCM turns shift solenoid valve A OFF, and shift solenoid valve A covers shift solenoid valve A pressure port (SA) to shift valve A. Shift solenoid valves B and C remain OFF. Shift valve A is moved to the left side to switch the pressure port (5B), CPC A pressure ports (5A) (5L) leading to the 4th clutch, and 3rd clutch pressure port (30) releasing 3rd clutch pressure. CPC A pressure (5L) changes to line pressure (5L) and 4th clutch pressure (40) is changed to line pressure mode, and the 4th clutch is engaged by the line pressure. The 1st clutch is also engaged, but no power is transmitted because of the one-way clutch.

NOTE: When used, "left" or "right" indicates direction on the hydraulic circuit.

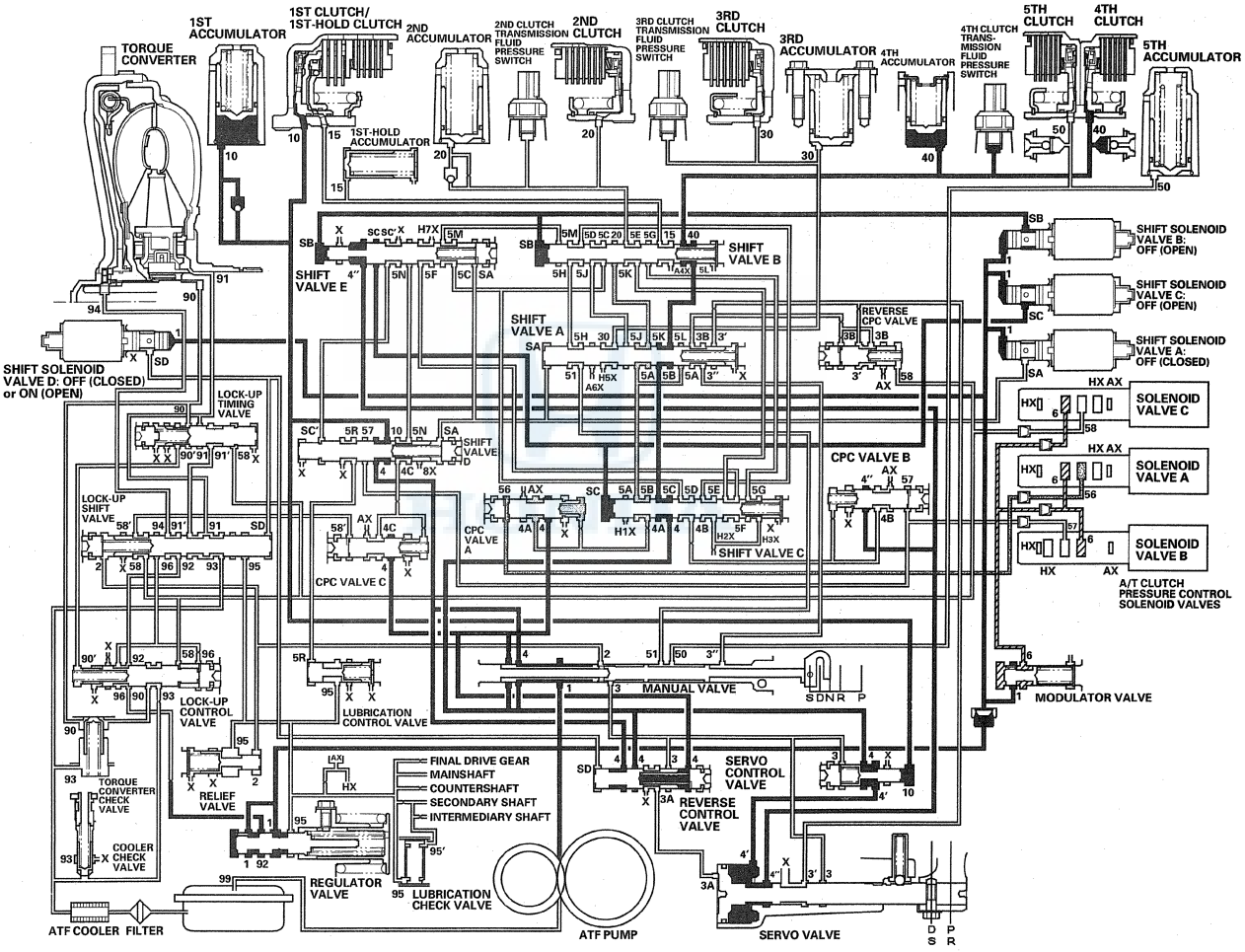

(cont'd)

System Description (cont'd)

Hydraulic Flow (cont'd)

Shifting between 4th gear and 5th gear in D

As the speed of the vehicle reaches the programmed value, the PCM turns shift solenoid valve C ON, and shift solenoid valve C covers shift solenoid valve C pressure port (SC) to shift valve C. Shift solenoid valve A remains OFF, and shift solenoid valve B remains OFF. Shift valve C is moved to the left side to switch the line pressure port (4) and CPC A pressure port (4A) leading to the 4th clutch. Shift valve C also uncovers the CPC B pressure port (4B) leading to the 5th clutch. The PCM actuates A/T clutch pressure control solenoid valves A and B. A/T clutch pressure control solenoid valve A pressure (56) is applied to CPC valve A, and A/T clutch pressure control solenoid valve B pressure (57) is applied to CPC valve B. CPC valve B regulates line pressure (4''), and line pressure (4'') becomes CPC B pressure (4B). CPC B pressure (4B) flows to shift valve A via shift valves C and B, and becomes 5th clutch pressure (51) at shift valve A. The 4th clutch pressure (40) is changed to CPC pressure mode, and the 5th clutch is engaged by the CPC pressure. The 1st clutch is also engaged, but no power is transmitted because of the one-way clutch.

NOTE: When used, "left" or "right" indicates direction on the hydraulic circuit.

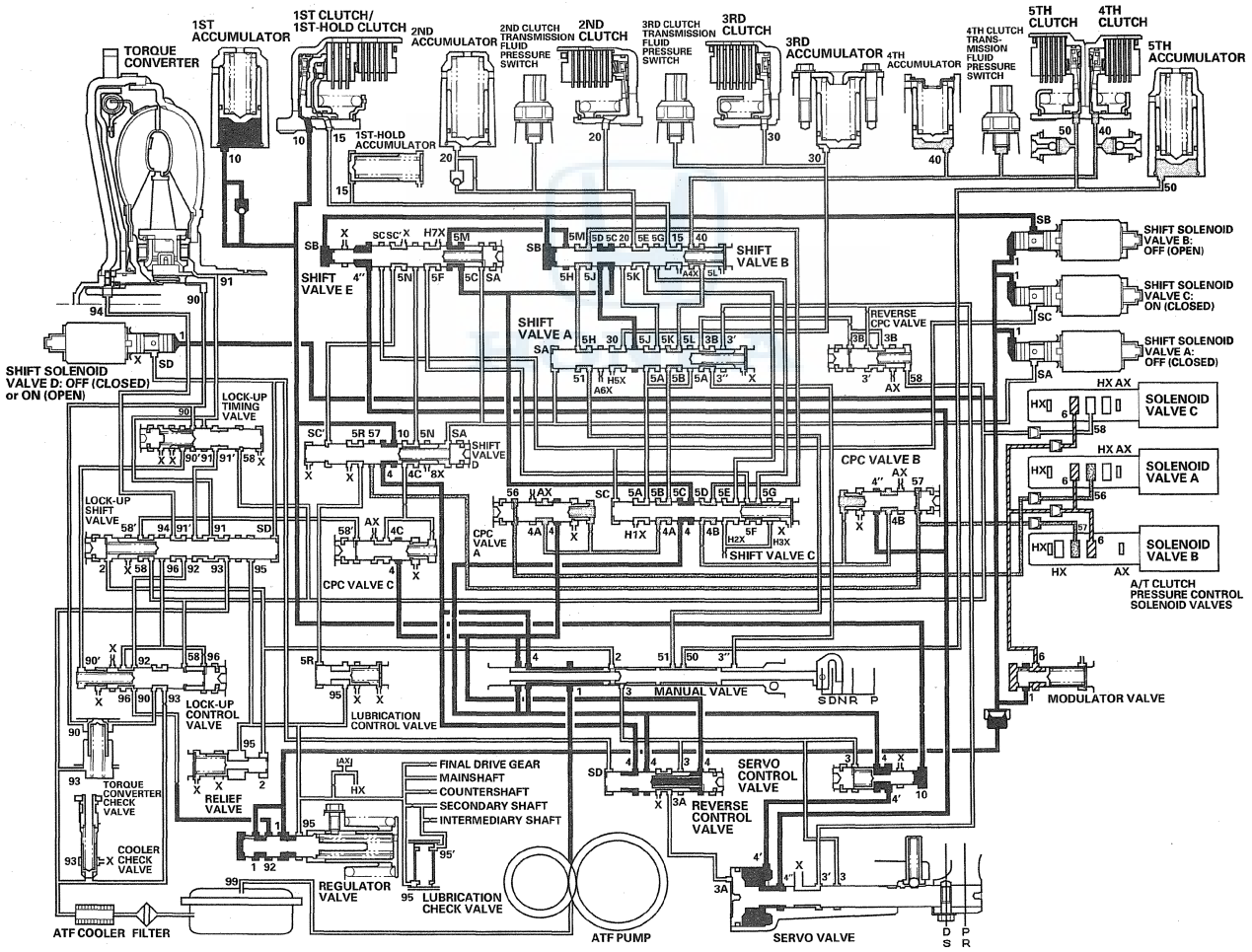

Driving in 5th gear in D

The PCM turns shift solenoid valve B ON, and shift solenoid valve B covers shift solenoid valve B pressure port (SB) to shift valve B. Shift solenoid valve A remains OFF, and shift solenoid valve C remains ON. Shift valve B is moved to the left side to switch the line pressure port (5H), CPC B pressure port (5D) leading to the 5th clutch, and 4th clutch pressure port (40) which releases the 4th clutch pressure. CPC B pressure (5H) changes to line pressure (5H) and 5th clutch pressure (51) (50) is changed to line pressure mode, and the 5th clutch is engaged by the line pressure. The 1st clutch is also engaged, but no power is transmitted because of the one-way clutch.

NOTE: When used, "left" or "right" indicates direction on the hydraulic circuit.

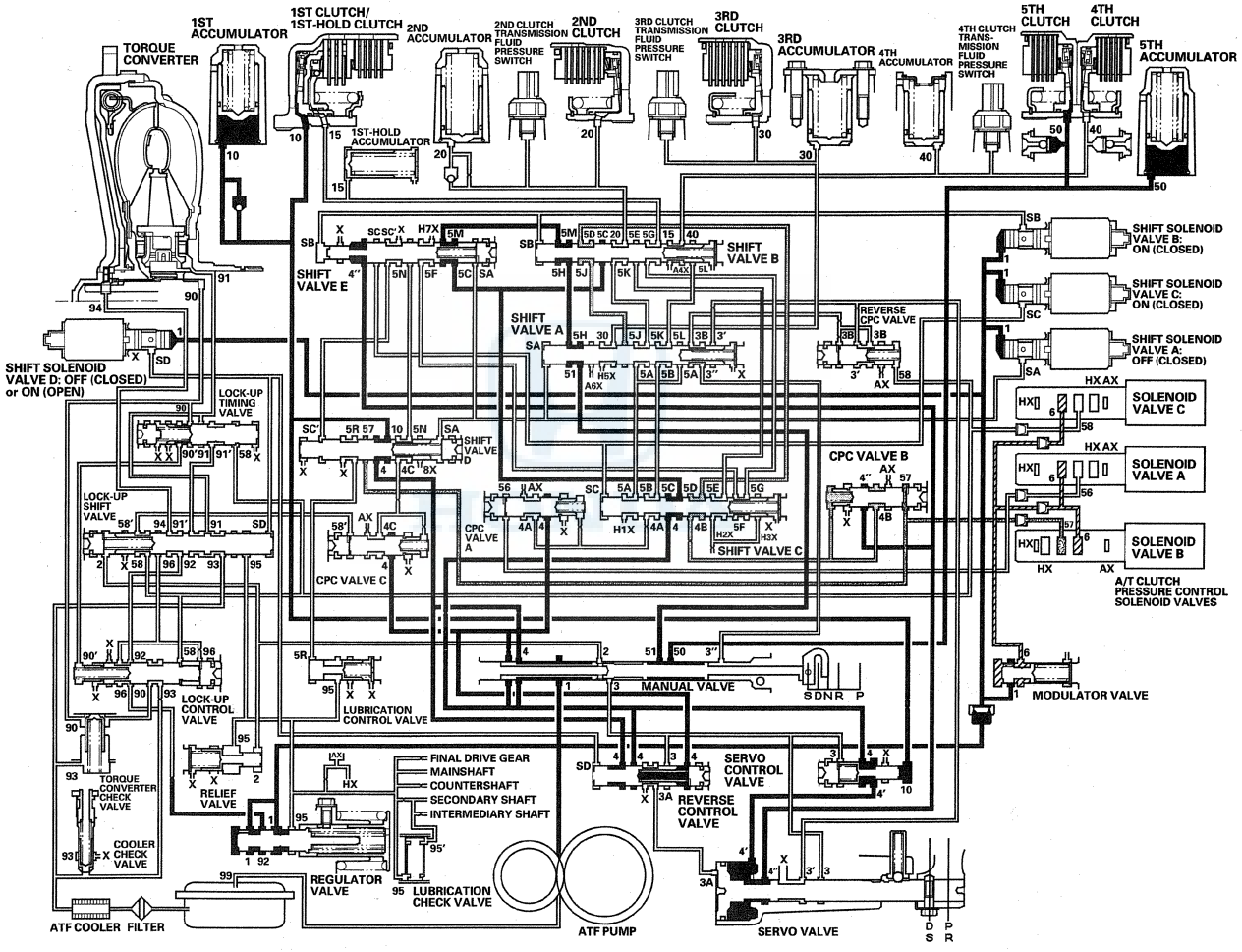

(cont'd)

System Description (cont'd)

Hydraulic Flow (cont'd)

Driving in 1st gear (engaged with 1st and 1st-hold clutches) in the sequential sportshift mode, and the D-paddle shift mode

Line pressure (1) regulated by the regulator valve flows to shift solenoid valves. The PCM switches the shift solenoid valves ON and OFF. The conditions of the shift solenoid valves and the positions of the shift valves are as follows:

- Shift solenoid valve A is OFF, and closes shift solenoid valve A pressure port (SA); shift valve A remains on the left side.
- Shift solenoid valve B is turned ON, and closes shift solenoid valve B pressure port (SB); shift valve B and shift valve E remain on the left side.
- Shift solenoid valve C is turned ON, and closes shift solenoid valve C pressure port (SC); shift valve C and shift valve D remain on the left side.
- Shift solenoid valve D is OFF, and closes shift solenoid valve D pressure port (SD).

Line pressure (4) becomes 1st clutch pressure (10) at shift valve D, and flows to the 1st clutch. The 1st clutch is engaged. The PCM actuates A/T clutch pressure control solenoid valve C, and A/T clutch pressure control solenoid valve C pressure (58) is applied to CPC valve C via the lock-up shift valve. CPC valve C regulates line pressure (4), and line pressure (4) becomes CPC C pressure (4C). CPC C pressure (4C) flows to shift valve B via shift valves D, E, and C, and becomes 1st-hold clutch pressure (15) at shift valve B. 1st-hold clutch pressure (15) is applied to the 1st-hold clutch, and the 1st-hold clutch is engaged.

NOTE: When used, "left" or "right" indicates direction on the hydraulic circuit.

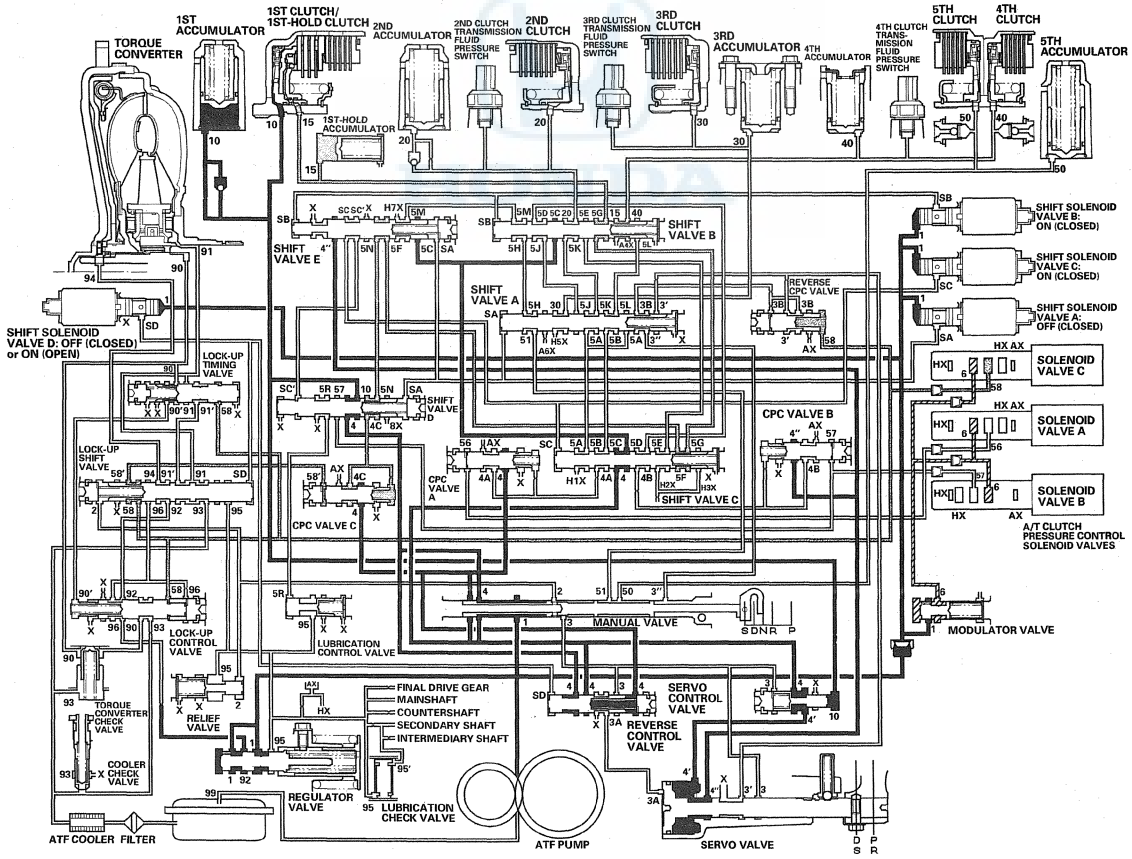

Shifting to R from P or N

The PCM switches the shift solenoid valves ON and OFF. The conditions of the shift solenoid valves and the positions of the shift valves are as follows:

- Shift solenoid valve A is OFF, and closes shift solenoid valve A pressure port (SA); shift valve A remains on the left side.
- Shift solenoid valve B is turned ON, and closes shift solenoid valve B pressure port (SB); shift valve B and shift valve E remain on the left side.
- Shift solenoid valve C is OFF, and opens shift solenoid valve C pressure port (SC); shift valve C and shift valve D move to the right side.
- Shift solenoid valve D is turned ON, and opens shift solenoid valve D pressure port (SD); reverse control valve moves to the right side.

The manual valve is moved to the R position, and line pressure (1) becomes line pressure (3) at the manual valve. Line pressure (3) passes through the reverse control valve, and becomes line pressure (3A), then flows to the servo valve. Line pressure (3A) pushes the servo valve to the reverse position. Line pressure (3) also flows to the reverse CPC valve, and becomes reverse CPC pressure (3B) (3''). Reverse CPC pressure (3'') becomes 5th clutch pressure (50) at the manual valve, and 5th clutch pressure (50) flows to the 5th clutch. The 5th clutch is engaged with reverse CPC pressure mode.

NOTE: When used, "left" or "right" indicates direction on the hydraulic circuit.

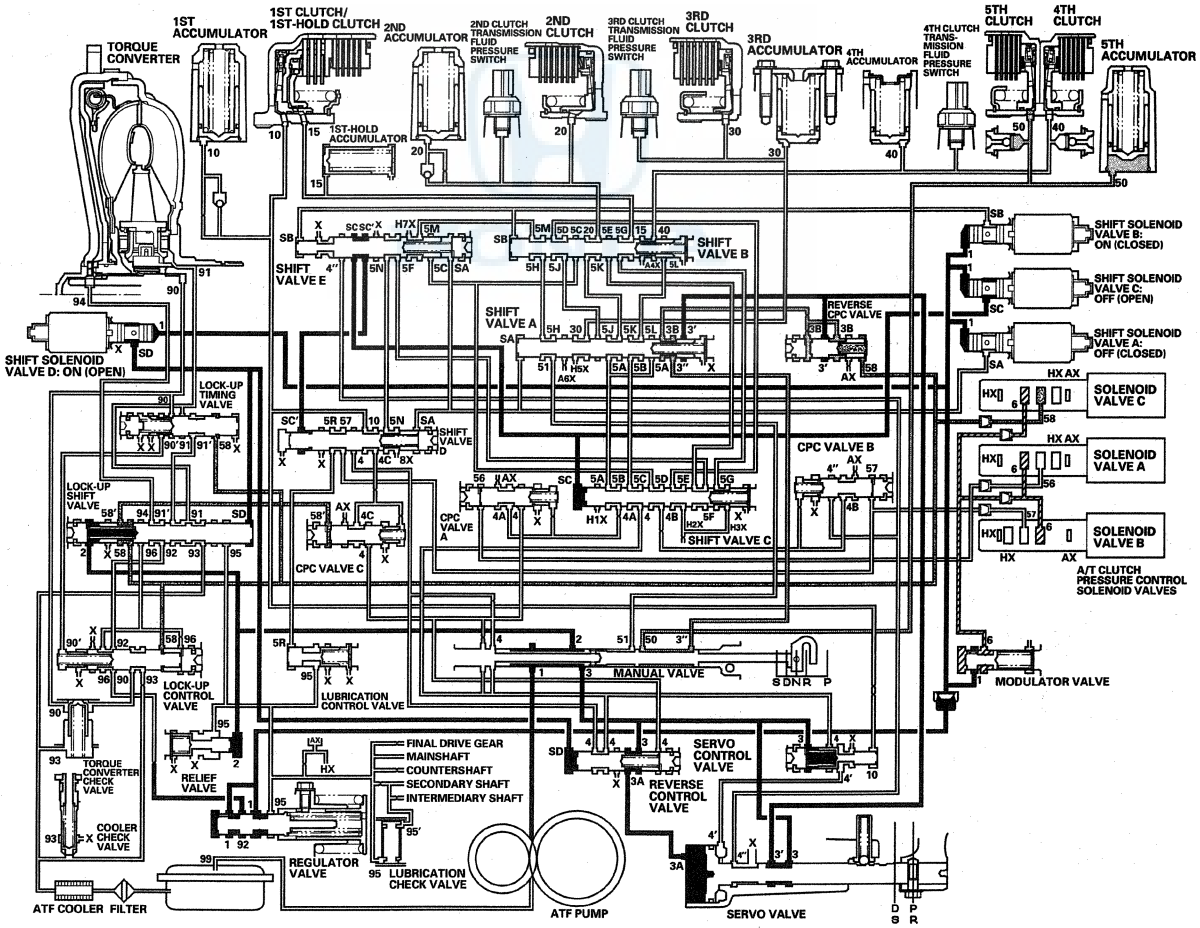

(cont'd)

System Description (cont'd)

Hydraulic Flow (cont'd)

Driving in reverse gear in R
When R is selected, the PCM turns shift solenoid valve A ON, and shift solenoid valve A uncovers shift solenoid valve A pressure port (SA) to shift valve A. Shift valve A is moved to the right side to switch the line pressure port (3') and reverse CPC pressure port (3B) leading to the 5th clutch. Line pressure (3) flows to the manual valve via the servo valve and shift valve A, and becomes 5th clutch pressure (50) at the manual valve. The 5th clutch pressure (50) flows to the 5th clutch, and the 5th clutch is engaged by the line pressure.

Reverse Inhibitor Control
When R is selected while the vehicle is moving forward at speeds over 6 mph (10 km/h), the PCM commands shift solenoid valve D to remain OFF so that shift solenoid valve D pressure (SD) is not applied to the reverse control valve. Line pressure (3) stops at the reverse control valve, and is not applied to the servo valve. No power is transmitted to the reverse direction.

NOTE: When used, "left" or "right" indicates direction on the hydraulic circuit.

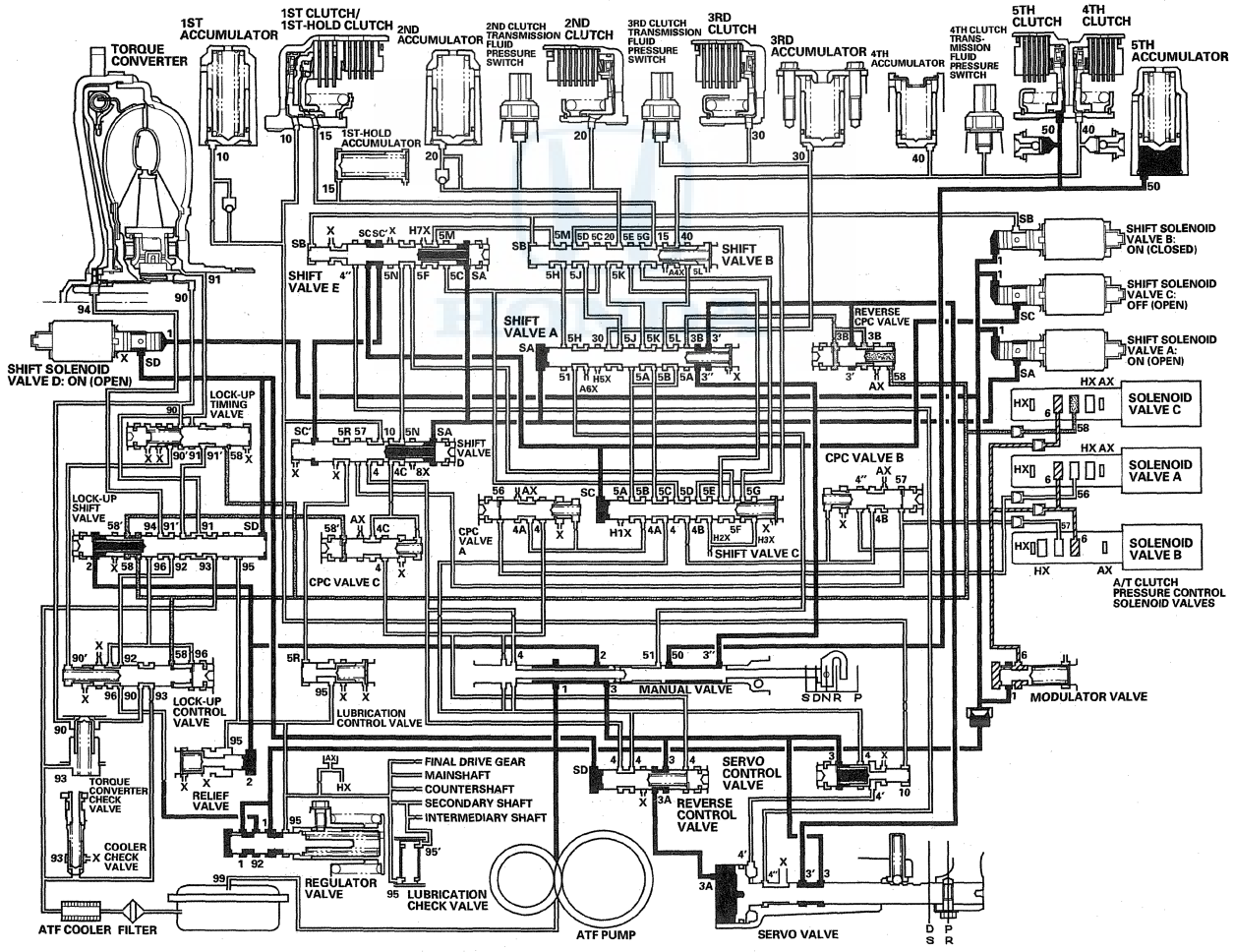

P Position

The PCM switch the shift solenoid valves ON and OFF. The conditions of the shift solenoid valves and the positions of the shift valves are as follows:

- Shift solenoid valve A is OFF, and closes shift solenoid valve A pressure port (SA); shift valve A remains on the left side.
- Shift solenoid valve B is turned ON, and closes shift solenoid valve B pressure port (SB); shift valve B and shift valve E remain on the left side.
- Shift solenoid valve C is OFF, and opens shift solenoid valve C pressure port (SC); shift valve C and shift valve D move to the right side.
- Shift solenoid valve D is turned ON, and opens shift solenoid valve D pressure port (SD); reverse control valve moves to the right side.

The manual valve is moved to the P position, and line pressure (1) becomes line pressure (3) at the manual valve. Line pressure (3) passes through the reverse control valve, and becomes line pressure (3A), then flows to the servo valve. Line pressure (3A) pushes the servo valve to the reverse position. Line pressure (3) flows to the manual valve via the reverse CPC valve and shift valve A, and stops at the manual valve. Hydraulic pressure is not applied the clutches.

NOTE: When used, "left" or "right" indicates direction on the hydraulic circuit.

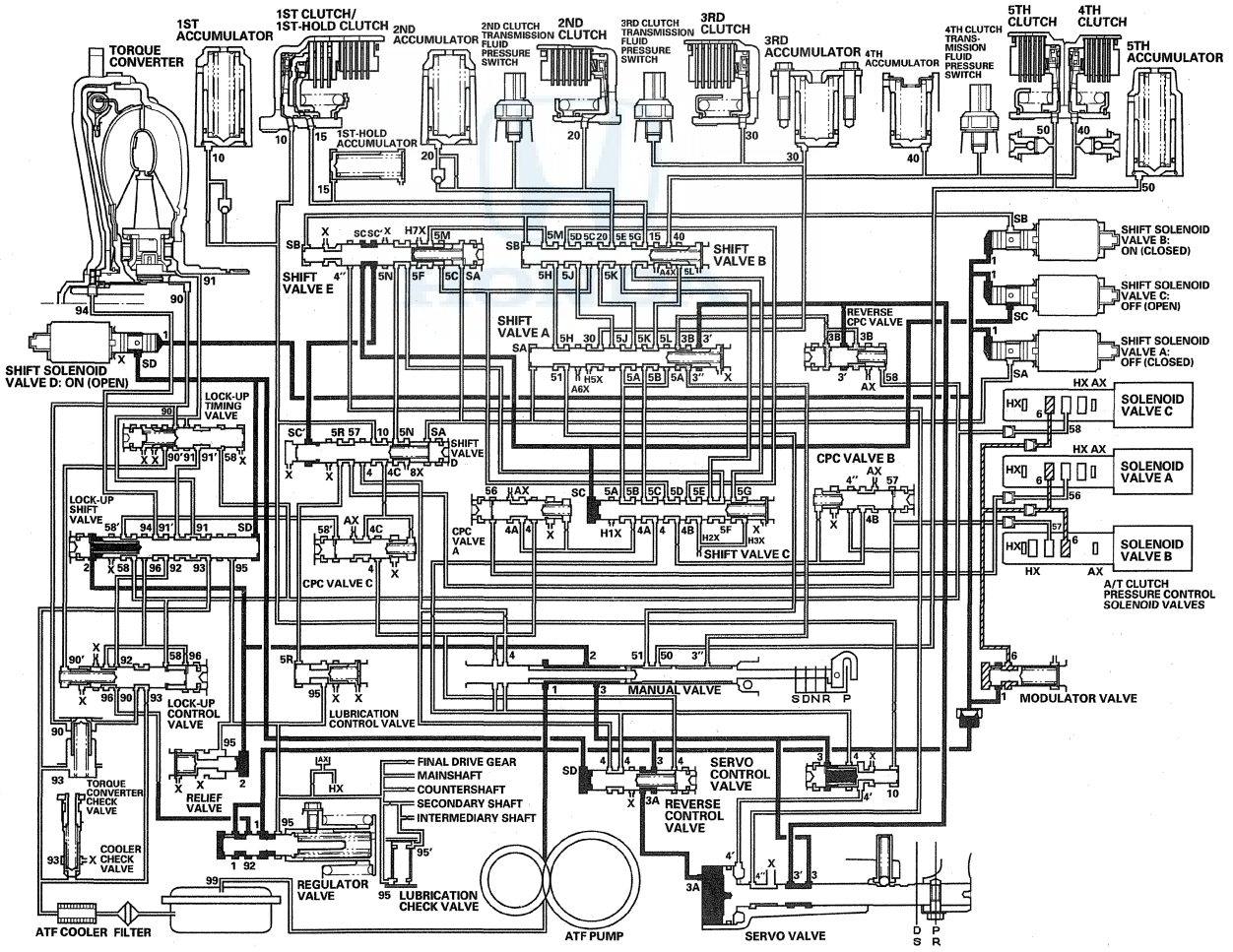

System Description (cont'd)

Lock-up System

The lock-up mechanism of the torque converter clutch operates in 2nd, 3rd, 4th, and 5th gears in D and S with sequential sportshift mode, and 3rd and 4th gears in S with automatic shift mode. The pressurized fluid is drained from the back of the torque converter through a fluid passage, causing the torque converter clutch piston to be held against the torque converter cover. As this takes place, the mainshaft rotates at the same speed as the engine crankshaft. Together with the hydraulic control, the PCM optimizes the timing and amount of the lock-up mechanism. When shift solenoid valve D is turned on by the PCM, shift solenoid valve D pressure switches the lock-up shift valve lock-up on and off. The A/T clutch pressure control solenoid valve C, the lock-up control valve, and lock-up timing valve control the amount of lock-up.

Torque Converter Clutch Lock-up ON (Engaging Torque Converter Clutch)
Fluid in the chamber between the torque converter cover and the torque converter clutch piston is drained off, and fluid entering from the chamber between the pump and stator exerts pressure through the torque converter clutch piston against the torque converter cover. The torque converter clutch piston engages with the torque converter cover; torque converter clutch lock-up ON, and the mainshaft rotates at the same as the engine.

Power flow

The power flows by way of:

Engine
↓
Drive plate
↓
Torque converter cover
↓
Torque converter clutch piston
↓
Damper spring
↓
Turbine
↓
Mainshaft

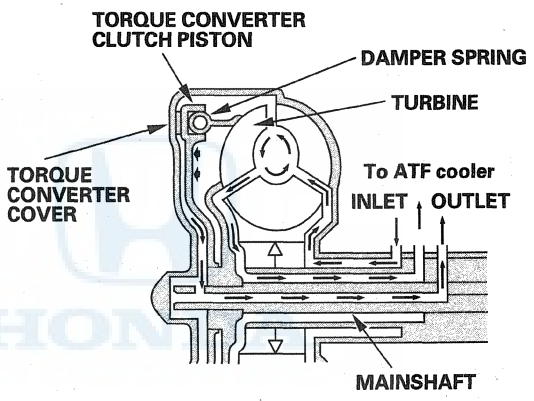

Torque Converter Clutch Lock-up OFF (Disengaging Torque Converter Clutch)
Fluid entered from the chamber between the torque converter cover and the torque converter clutch piston passes through the torque converter and goes out from the chambers between the turbine and the stator, and between the pump and the stator. As a result, the torque converter clutch piston moves away from the torque converter cover, and the torque converter clutch lock-up is released; torque converter clutch lock-up OFF.

Power flow

The power flows by way of:

Engine
↓
Drive plate
↓
Torque converter cover
↓
Pump
↓
Turbine
↓
Mainshaft

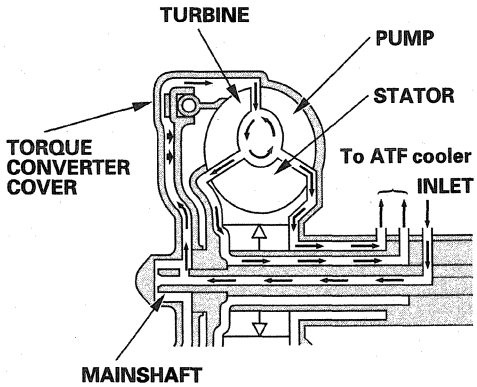

No Lock-up

The PCM commands shift solenoid valve D to remain OFF, and shift solenoid valve D covers shift solenoid valve D pressure port (SD) to the lock-up shift valve. The lock-up shift valve is in the right side, and uncovers the port leading torque converter pressure (92) to the left side of the torque converter. Torque converter pressure (92) from regulator valve becomes torque converter pressure (94) at the lock-up shift valve, and enters into the left side of the torque converter to disengage the torque converter clutch. The torque converter clutch is OFF.

NOTE: When used, "left" or "right" indicates direction on the hydraulic circuit.

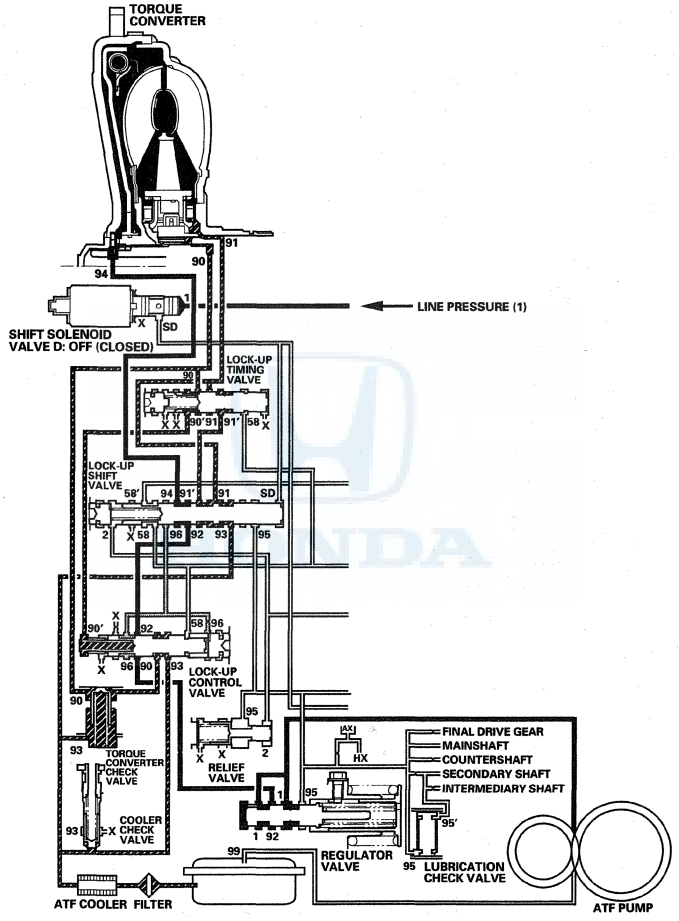

(cont'd)

System Description (cont'd)

Lock-up System (cont'd)

Partial Lock-up

As the speed of the vehicle reaches the programmed value, the PCM turns shift solenoid valve D ON, and shift solenoid valve D uncovers shift solenoid valve D pressure port (SD) to the lock-up shift valve. The lock-up shift valve is moved to the left side which uncovers the torque converter pressure port (91) leading to the right side of the torque converter to engage the torque converter clutch. The PCM also actuates A/T clutch pressure control solenoid valve C, and A/T clutch pressure control solenoid valve C pressure (58) is applied to the lock-up control valve and lock-up timing valve. When A/T clutch pressure control solenoid valve C pressure (58) is low, torque converter pressure (91) from the lock-up timing valve is low. The torque converter clutch is engaged partially. A/T clutch pressure control solenoid valve C pressure (58) increases, and the lock-up timing valve is moved to the left side to uncover the port leading torque converter pressure to high. Under this condition, the torque converter clutch is engaged by pressure from the right side of the torque converter; this condition is partial lock-up.

NOTE: When used, "left" or "right" indicates direction on the hydraulic circuit.

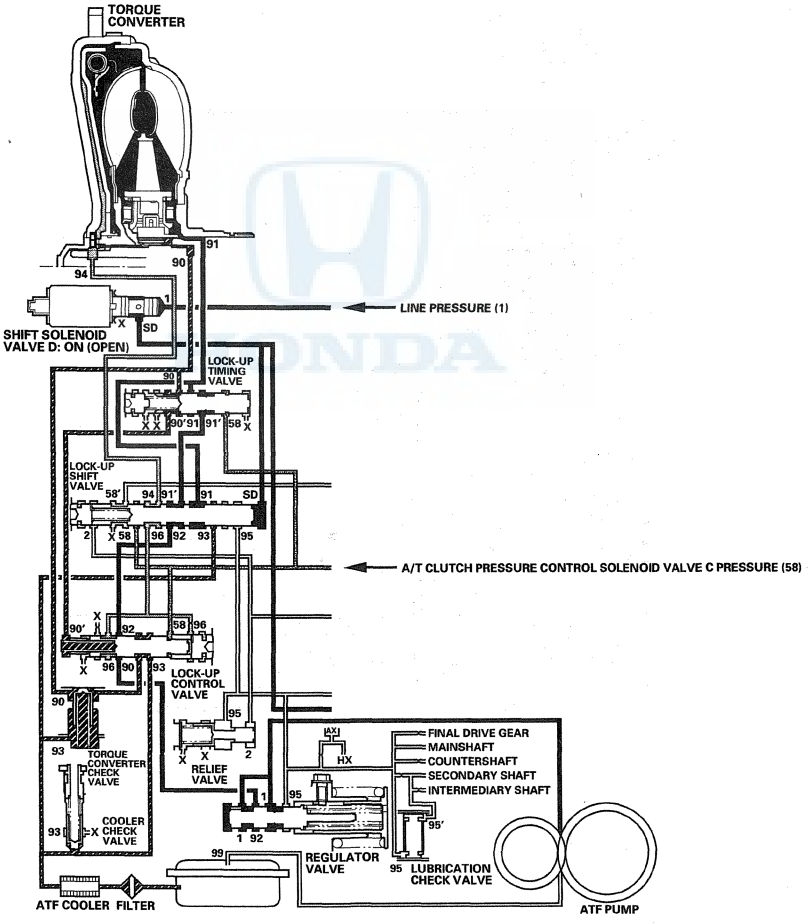

Full Lock-up

When the vehicle speed further increases, the PCM actuates A/T clutch pressure control solenoid valve C to increase A/T clutch pressure control solenoid valve C pressure (58). A/T clutch pressure control solenoid valve C pressure (58) is applied to the lock-up control valve and lock-up timing valve, and the lock-up control valve and lock-up timing valve are moved to the left side. Torque converter pressure (94) from the left side of the torque converter releases at the lock-up control valve, and lock-up timing valve uncovers the torque converter pressure port (91) leading to the right side of the torque converter. Torque converter back pressure is released fully, and torque converter clutch is engaged fully.

NOTE: When used, "left" or "right" indicates direction on the hydraulic circuit.

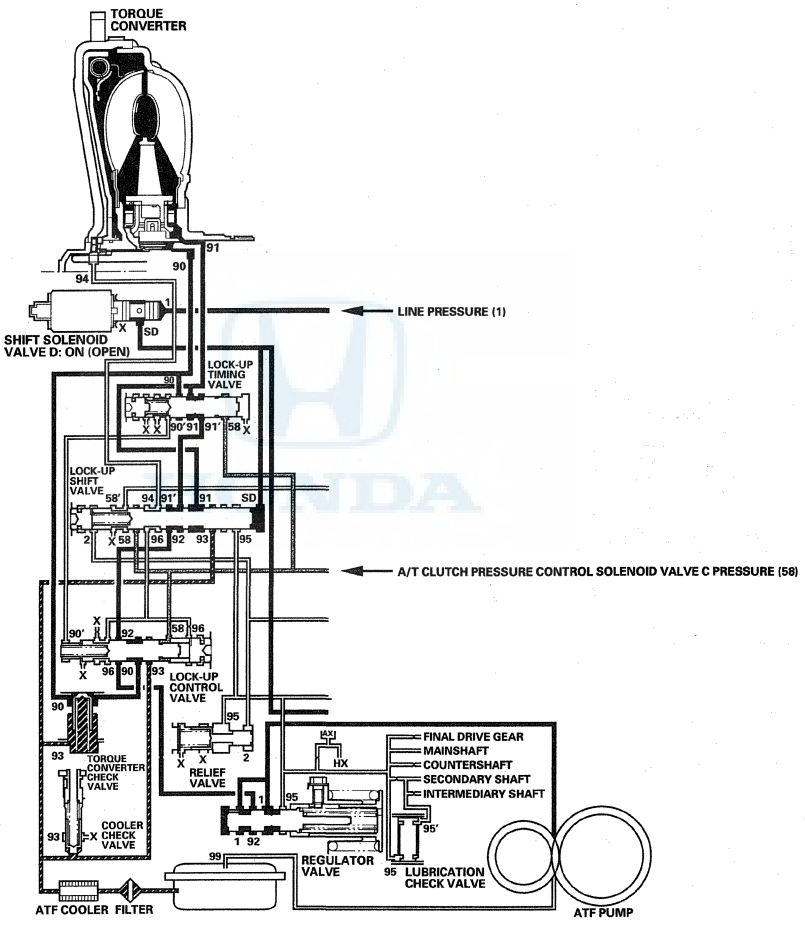

System Description (cont'd)

Circuit Diagram - PCM A/T Control System

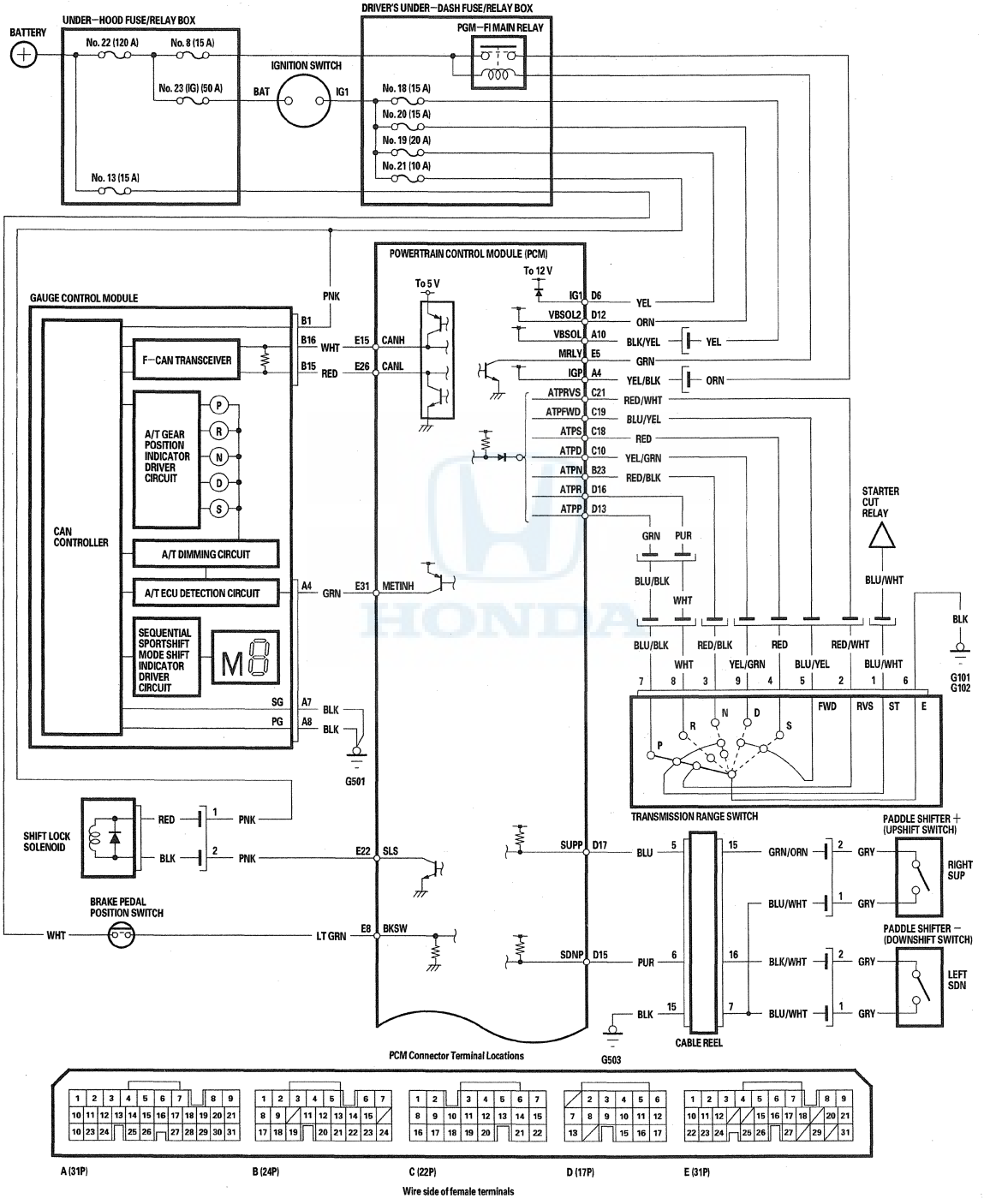

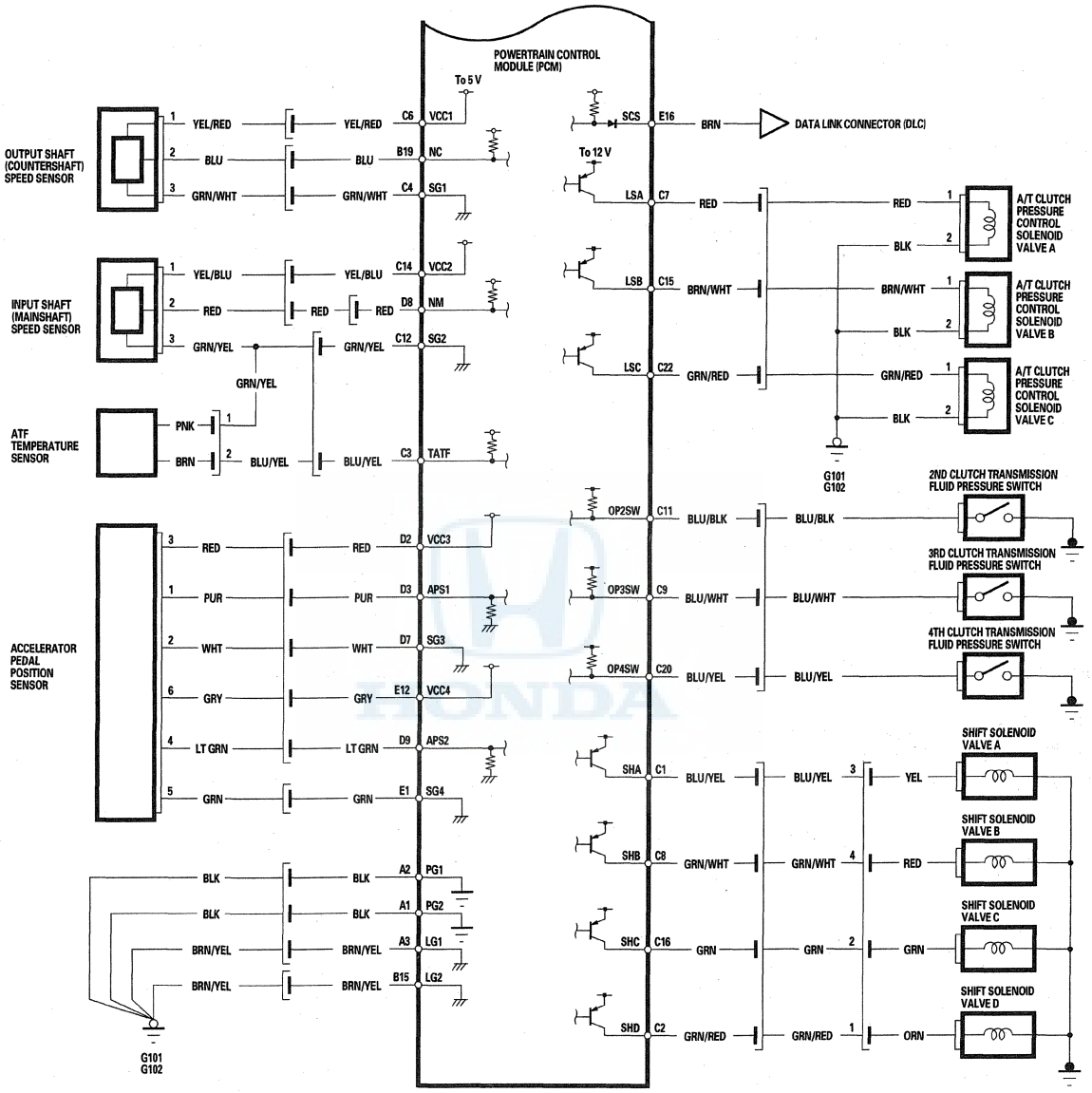

PCM Connector Terminal Locations

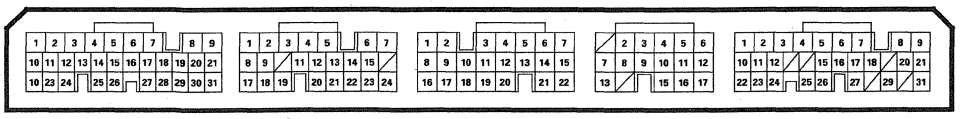

A (31P) B (24P) C (22P) D (17P) E (31P)

Wire side of female terminals

DTC Troubleshooting

DTC P0705: Transmission Range Switch (Multiple Shift-position Input)

NOTE: This code is caused by an electrical circuit problem and cannot be caused by a mechanical problem in the transmission.

1. Turn the ignition switch to ON (II).
2. Compare the ATPP, ATPR, ATPN, ATPD, ATPS, ATPFWD, and ATPRVS inputs with the HDS to the following table, in each gear position.

	ATPP	ATPR	ATPN	ATPD	ATPS	ATP FWD	ATP RVS
P	○	×	×	×	×	×	○
R	×	○	×	×	×	×	○
N	×	×	○	×	×	×	○
D	×	×	×	○	×	○	×
S	×	×	×	×	○	○	×

○: ON ×: OFF

Do the transmission range switch signals match?

YES—Intermittent failure, the system is OK at this time. ■

NO—Go to step 3.

3. Compare the ATPP, ATPR, ATPN, ATPD, ATPS, ATPFWD, and ATPRVS inputs with the HDS to the table in step 2, in each gear position.

Are any transmission range signals ON in all shift lever positions?

YES—Go to step 7.

NO—Go to step 4.

4. Disconnect the transmission range switch connector.
5. Connect the transmission range switch connector terminal which incorrectly indicates ON in step 3 to body ground with a jumper wire.
6. Compare the ATPP, ATPR, ATPN, ATPD, ATPS, ATPFWD, and ATPRVS inputs with the HDS to the table in step 2.

Do multiple transmission range switch signals indicate ON?

YES—Repair short in the wires between the transmission range switch and the PCM. Refer to the following table. ■

NO—Replace the transmission range switch (see page 14-245).

	ATPP	ATPR	ATPN	ATPD	ATPS	ATP FWD	ATP RVS
PCM	D13	D16	B23	C10	C18	C19	C21
Range Switch	7	8	3	9	4	5	2

7. Disconnect the transmission range switch connector.
8. Check the abnormal transmission range switch signal with the HDS.

Do any transmission range switch signals remain ON?

YES—Go to step 9.

NO—Replace the transmission range switch (see page 14-245).

9. Check continuity to body ground in the circuit which remained ON, refer to the table in step 2.

Does the circuit that indicated ON have continuity to ground?

YES—Repair a short to body ground in the wire between the transmission range switch and the PCM. ■

NO—Replace the PCM. ■

DTC P0706: Transmission Range Switch (Open)

NOTE:
- Before you troubleshoot, record all freeze data and any on-board snapshot with the HDS, and review General Troubleshooting Information (see page 14-4).
- This code is caused by an electrical circuit problem and cannot be caused by a mechanical problem in the transmission.

1. Check the shift cable is adjusted properly.

2. Turn the ignition switch to ON (II).

3. Compare the ATPP, ATPR, ATPN, ATPD, ATPS, ATPFWD, and ATPRVS inputs with the HDS to the following table, in each gear position.

	ATPP	ATPR	ATPN	ATPD	ATPS	ATP FWD	ATP RVS
P	○	×	×	×	×	×	○
R	×	○	×	×	×	×	○
N	×	×	○	×	×	×	○
D	×	×	×	○	×	○	×
S	×	×	×	×	○	○	×

○: ON ×: OFF

Do the transmission range switch signals match?

YES—Intermittent failure, the system is OK at this time. ■

NO—Go to step 4.

4. Compare the ATPP, ATPR, ATPN, ATPD, ATPS, ATPFWD, and ATPRVS inputs with the HDS to the table in step 3, in each gear position.

Do all shift positions remain OFF?

YES—Go to step 12.

NO—Go to step 5.

5. Turn the ignition switch to LOCK (0).

6. Disconnect the transmission range switch connector.

7. Connect the transmission range switch connector terminal which did not indicate ON in step 4 to body ground with a jumper wire.

8. Turn the ignition switch to ON (II).

9. Check the transmission range switch signal which did not indicate ON with the HDS.

Does the transmission range switch indicate ON?

YES—Replace the transmission range switch (see page 14-245).

NO—Go to step 10.

10. Turn the ignition switch to LOCK (0).

11. Check for continuity between the transmission range switch circuit terminal and the PCM terminal of the input which indicated OFF. Refer to the following table.

	ATPP	ATPR	ATPN	ATPD	ATPS	ATP FWD	ATP RVS
PCM	D13	D16	B23	C10	C18	C19	C21
Range Switch	7	8	3	9	4	5	2

Is there continuity?

YES—Replace the PCM. ■

NO—Repair an open in the wire between the transmission range switch and the PCM. ■

12. Turn the ignition switch to LOCK (0).

13. Disconnect the transmission range switch connector.

14. Check for continuity between transmission range switch connector terminal No. 6 and body ground.

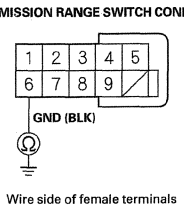

Wire side of female terminals

Is there continuity?

YES—Replace the transmission range switch (see page 14-245).

NO—Repair an open in the wire between the transmission range switch and body ground (G101), or repair poor body ground (G101). ■

DTC Troubleshooting (cont'd)

DTC P0711: ATF Temperature Sensor (Range/ Performance)

NOTE:
- Before you troubleshoot, record all freeze data and any on-board snapshot, and review General Troubleshooting Information (see page 14-4).
- This code is caused by an electrical circuit problem and cannot be caused by a mechanical problem in the transmission.

1. Turn the ignition switch to ON (II), and wait for 20 seconds.
2. Check the ATF Temperature with the HDS in the A/T Data List.

   Does the ATF Temperature indicate −4 °F (−20 °C) or below?

   YES—Go to step 3.

   NO—Go to step 5.
3. Start the engine, and warm it up to normal operating temperature (the radiator fan comes on).
4. Check the ATF Temperature with the HDS in the A/T Data List.

   Does the ATF Temperature remain −4 °F (−20 °C) or below?

   YES—Replace the ATF temperature sensor (see page 14-194), then go to step 14.

   NO—Intermittent failure, the system is OK at this time. If there is an abnormal temperature rise in the ATF temperature sensor, go to step 8. ■
5. Check that the ATF Temperature with the HDS in the A/T Data List.

   Does the ATF Temperature exceed 230 °F (110 °C)?

   YES—Go to step 6.

   NO—Intermittent failure, the system is OK at this time. ■
6. Leave the engine off until the Engine Coolant Temperature reads 122 °F (50 °C) with the HDS in the A/T Data List.
7. Check the ATF Temperature with the HDS in the A/T Data List.

   Does the ATF temperature remain 230 °F (110 °C) or higher?

   YES—Replace the ATF temperature sensor (see page 14-194), then go to step 14.

   NO—Intermittent failure, the system is OK at this time. If there is an abnormal decrease in temperature of the ATF temperature sensor, go to step 8. ■

8. Update the A/T software in the PCM if it does not have the latest software (see page 11-230), or substitute a known-good PCM (see page 11-7).

9. Turn the ignition switch to ON (II), and wait for 20 seconds, then start the engine. Warm the engine up to normal operating temperature (the radiator fan comes on).

10. Turn the engine off, and leave it off until the engine coolant cools to ambient air temperature (the Engine Coolant Temperature reads the same as ambient air temperature with the HDS).

11. Turn the ignition switch to ON (II), and wait for 20 seconds, then start the engine. Warm the engine up to normal operating temperature (the radiator fan comes on). Start off in D, accelerate at 4-degree-opened throttle or more opened throttle, and run the vehicle at speeds over 19 mph (30 km/h) for at least 5 minutes.

12. Check for Pending or Confirmed DTCs with the HDS.

    Is DTC P0711 indicated?

    YES—If the PCM was updated, substitute a known-good PCM (see page 11-7), then recheck. If the PCM was substituted, go to step 1.

    NO—Go to step 13.

13. Monitor the OBD STATUS for P0711 in the DTCs MENU with the DHS.

    Does the HDS indicate PASSED?

    YES—If the PCM was updated, troubleshooting is complete. If the PCM was substituted, replace the original PCM (see page 11-232). If any other Pending or Confirmed DTCs were indicated on step 12, go to the indicated DTC's troubleshooting. ■

    NO—Check for poor connections and loose terminals at the ATF temperature sensor and the PCM. If the PCM was updated, substitute a known-good PCM (see page 11-7), then recheck. If the PCM was substituted, go to step 1. If the HDS indicates NOT COMPLETED, return to step 9 and recheck.

14. Clear the DTC with the HDS.

15. Turn the ignition switch to ON (II), and wait for 20 seconds, then start the engine. Warm the engine up to normal operating temperature (the radiator fan comes on).

16. Turn the engine off, and leave it off until the engine coolant cools to ambient air temperature (the Engine Coolant Temperature reads the same as ambient air temperature with the HDS).

17. Turn the ignition switch to ON (II), and wait for 20 seconds, then start the engine. Warm the engine up to normal operating temperature (the radiator fan comes on). Start off in D, accelerate at 4-degree-opened throttle or more opened throttle, and run the vehicle at speeds over 19 mph (30 km/h) for at least 5 minutes.

18. Check for Pending or Confirmed DTCs with the HDS.

    Is DTC P0711 indicated?

    YES—Check for poor connections and loose terminals at the ATF temperature sensor and the PCM, then go to step 1.

    NO—Go to step 19.

19. Monitor the OBD STATUS for P0711 in the DTCs MENU with the HDS.

    Does the HDS indicate PASSED?

    YES—Troubleshooting is complete. If any other Pending or Confirmed DTCs were indicated on step 18, go to the indicated DTC's troubleshooting. ■

    NO—Check for poor connections and loose terminals at the ATF temperature sensor and the PCM, then go to step 1. If the HDS indicates NOT COMPLETED, return to step 15 and recheck.

DTC Troubleshooting (cont'd)

DTC P0712: ATF Temperature Sensor (Short)

NOTE:
- Before you troubleshoot, record all freeze data and any on-board snapshot, and review General Troubleshooting Information (see page 14-4).
- This code is caused by an electrical circuit problem and cannot be caused by a mechanical problem in the transmission.

1. Turn the ignition switch to ON (II), and wait for 20 seconds.
2. Check the ATF temperature sensor voltage with the HDS in the A/T Data List.

   Is the ATF Temp Sensor (V) 0.07 V or less?

   YES—Go to step 3.

   NO—Intermittent failure, the system is OK at this time. Check for an intermittent short in the wire between the ATF temperature sensor and the PCM. ■
3. Turn the ignition switch to LOCK (0).
4. Disconnect the ATF temperature sensor connector at the transmission end cover.
5. Turn the ignition switch to ON (II).
6. Check the ATF temperature sensor voltage with the HDS.

   Is the ATF Temp Sensor (V) 0.07 V or less?

   YES—Go to step 7.

   NO—Replace the ATF temperature sensor (see page 14-194), then go to step 16.
7. Turn the ignition switch to LOCK (0).
8. Jump the SCS line with the HDS.
9. Disconnect PCM connector C (22P).
10. Check for continuity between ATF temperature sensor connector terminal No. 2 and body ground.

ATF TEMPERATURE SENSOR CONNECTOR

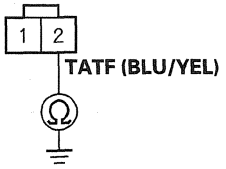

Wire side of female terminals

Is there continuity?

YES—Repair a short in the wire between PCM connector terminal C3 and ATF temperature sensor connector terminal No. 2, then go to step 16.

NO—Go to step 11.

11. Reconnect all connectors.

12. Update the A/T software in the PCM if it does not have the latest software (see page 11-230), or substitute a known-good PCM (see page 11-7).

13. Turn the ignition switch to ON (II), and wait for 20 seconds, then start the engine in P. Run the engine for at least 10 seconds.

14. Check for Pending or Confirmed DTCs with the HDS.

    Is DTC P0712 indicated?

    YES—If the PCM was updated, substitute a known-good PCM (see page 11-7), then recheck. If the PCM was substituted, go to step 1.

    NO—Go to step 15.

15. Monitor the OBD STATUS for P0712 in the DTCs MENU with the HDS.

    Does the HDS indicate PASSED?

    YES—If the PCM was updated, troubleshooting is complete. If the PCM was substituted, replace the original PCM (see page 11-232). If any other Pending or Confirmed DTCs were indicated on step 14, go to the indicated DTC's troubleshooting. ■

    NO—Check for poor connections and loose terminals at the ATF temperature sensor and the PCM. If the PCM was updated, substitute a known-good PCM (see page 11-7), then recheck. If the PCM was substituted, go to step 1. If the HDS indicates NOT COMPLETED, return to step 13 and recheck.

16. Reconnect all connectors.

17. Clear the DTC with the HDS.

18. Turn the ignition switch to ON (II), and wait for 20 seconds, then start the engine in P. Run the engine for at least 10 seconds.

19. Check for Pending or Confirmed DTCs with the HDS.

    Is DTC P0712 indicated?

    YES—Check for poor connections and loose terminals at the ATF temperature sensor and the PCM, then go to step 1.

    NO—Go to step 20.

20. Monitor the OBD STATUS for P0712 in the DTCs MENU with the HDS.

    Does the HDS indicate PASSED?

    YES—Troubleshooting is complete. If any other Pending or Confirmed DTCs were indicated on step 19, go to the indicated DTC's troubleshooting. ■

    NO—Check for poor connections and loose terminals at the ATF temperature sensor and the PCM, then go to step 1. If the HDS indicates NOT COMPLETED, return to step 18 and recheck.

DTC Troubleshooting (cont'd)

DTC P0713: ATF Temperature Sensor (Open)

NOTE:
- Before you troubleshoot, record all freeze data and any on-board snapshot, and review General Troubleshooting Information (see page 14-4).
- This code is caused by an electrical circuit problem and cannot be caused by a mechanical problem in the transmission.

1. Turn the ignition switch to ON (II), and wait for 20 seconds.

2. Check the ATF temperature sensor voltage with the HDS in the A/T Data List.

   Does the ATF Temp Sensor (V) exceed 4.93 V?

   YES—Go to step 3.

   NO—Intermittent failure, the system is OK at this time. Check for poor connections or loose terminals at the ATF temperature sensor and the PCM. ■

3. Turn the ignition switch to LOCK (0).

4. Disconnect the ATF temperature sensor connector at the transmission end cover.

5. Connect the ATF temperature sensor connector terminal No. 2 to body ground with a jumper wire. Turn the ignition switch to ON (II), and check the ATF temperature sensor voltage with the HDS in the A/T Data List.

ATF TEMPERATURE SENSOR CONNECTOR

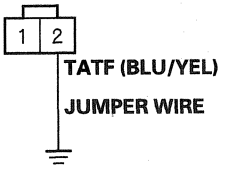

Wire side of female terminals

Does the ATF Temp Sensor (V) drop to 0.07 V or below?

YES—Go to step 6.

NO—Go to step 8.

6. Turn the ignition switch to LOCK (0).

7. Connect a jumper wire between ATF temperature sensor connector terminals No. 1 and No. 2. Turn the ignition switch to ON (II), and check the ATF temperature sensor voltage with the HDS in the A/T Data List.

ATF TEMPERATURE SENSOR CONNECTOR

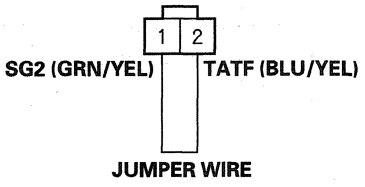

Wire side of female terminals

Does the ATF Temp Sensor (V) remain 0.07 V or below?

YES—Replace the ATF temperature sensor, then go to step 14.

NO—Repair an open in the wire between PCM connector terminal C12 and the ATF temperature sensor connector terminal No. 1, then go to step 14.

8. Measure the voltage between PCM connector terminal C3 and body ground.

PCM CONNECTOR C (22P)

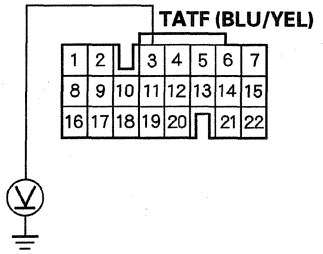

Wire side of female terminals

Is there about 5 V?

YES—Repair an open in the wire between PCM connector terminal C3 and the ATF temperature sensor, then go to step 14.

NO—Go to step 9.

(cont'd)

DTC Troubleshooting (cont'd)

9. Connect the ATF temperature sensor connector.
10. Update the A/T software in the PCM if it does not have the latest software (see page 11-230), or substitute a known-good PCM (see page 11-7).
11. Turn the ignition switch to ON (II), and wait for 20 seconds, then start the engine in P. Run the engine for at least 10 seconds.
12. Check for Pending or Confirmed DTCs with the HDS.

    Is DTC P0713 indicated?

    YES—If the PCM was updated, substitute a known-good PCM (see page 11-7), then recheck. If the PCM was substituted, go to step 1.

    NO—Go to step 13.
13. Monitor the OBD STATUS for P0713 in the DTCs MENU with the HDS.

    Does the HDS indicate PASSED?

    YES—If the PCM was updated, troubleshooting is complete. If the PCM was substituted, replace the original PCM (see page 11-232). If any other Pending or Confirmed DTCs were indicated on step 12, go to the indicated DTC's troubleshooting. ■

    NO—Check for poor connections and loose terminals at the ATF temperature sensor and the PCM. If the PCM was updated, substitute a known-good PCM (see page 11-7), then recheck. If the PCM was substituted, go to step 1. If the HDS indicates NOT COMPLETED, return to step 11 and recheck.
14. Connect the ATF temperature sensor connector.
15. Clear the DTC with the HDS.
16. Turn the ignition switch to ON (II), and wait for 20 seconds, then start the engine in P. Run the engine for at least 10 seconds.
17. Check for Pending or Confirmed DTCs with the HDS.

    Is DTC P0713 indicated?

    YES—Check for poor connections and loose terminals at the ATF temperature sensor and the PCM, then go to step 1.

    NO—Go to step 18.
18. Monitor the OBD status for P0712 in the DTCs MENU with the HDS.

    Does the HDS indicate PASSED?

    YES—Troubleshooting is complete. If any other Pending or Confirmed DTCs were indicated on step 17, go to the indicated DTC's troubleshooting. ■

    NO—Check for poor connections and loose terminals at the ATF temperature sensor and the PCM, then go to step 1. If the HDS indicates NOT COMPLETED, return to step 16 and recheck.

DTC P0716: Problem in Input Shaft (Mainshaft) Speed Sensor Circut

DTC P0721: Problem in Output Shaft (Countershaft) Speed Sensor Circuit

NOTE: This code is caused by an electrical circuit problem and cannot be caused by a mechanical problem in the transmission.

1. Turn the ignition switch to ON (II).
2. Clear the DTC with the HDS.
3. Raise the vehicle on a lift, make sure it is securely supported, and allow the all four wheels to rotate freely.
4. Start the engine, disable the VSA by pressing the VSA OFF button, run the vehicle with the shift lever in D, and at speeds over 12 mph (20 km/h) for at least 10 seconds. Slow down, and stop the wheels.
5. Check for pending or Confirmed DTCs with the HDS.

   Is DTC P0718 or P0723 indicate?

   YES—Go to the DTC P0718 troubleshooting (see page 14-90) or the DTC P0723 troubleshooting (see page 14-92).■

   NO—Go to step 6.
6. Check for pending or Confirmed DTCs with the HDS.

   Is DTC P0716 or P0721 indicated?

   YES—Go to step 7.

   NO—Intermittent failure, the system is OK at this time.■
7. Check the input shaft (mainshaft) speed sensor or the output shaft (countershaft) speed sensor for poor conection and proper installation.

   Are there connections and installation OK?

   YES—Replace the input shaft (mainshaft) speed sensor or the output shaft (countershaft) speed sensor, then go to step 8.

   NO—Connect the speed sensor connector and reinstall the speed sensor, then go to step 8.
8. Turn the ignition switch to ON (II).
9. Clear the DTC with HDS.
10. Start the engine, disable the VSA by pressing the VSA OFF button, run the vehicle with the shift lever in D,and at speeds over 12 mph (20 km/h) for at least 10 seconds. Slow down, and stop the wheels.
11. Check for Pending or Confirmed DTCs with the HDS.

    Is DTC P0716 or P0721 indicated?

    YES—Go to step 1.

    NO—Troubleshooting is complete.■

DTC Troubleshooting (cont'd)

DTC P0717: Input Shaft (Mainshaft) Speed Sensor Circuit (No Signal Input)

DTC P0718: Input Shaft (Mainshaft) Speed Sensor (Intermittent Failure)

NOTE: This code is caused by an electrical circuit problem and cannot be caused by a mechanical problem in the transmission.

1. Turn the ignition switch to ON (II).
2. Clear the DTC with the HDS.
3. Raise the vehicle on a lift, make sure it is securely supported, and allow the all four wheels to rotate freely.
4. Start the engine, disable the VSA by pressing the VSA OFF button, run the vehicle with the shift lever in D, and at speeds over 12 mph (20 km/h). Check the input shaft (mainshaft) speed and the output shaft (countershaft) speed in the Data List with the HDS. Slow down, and stop the wheels.

   Are they same speed?

   YES—Intermittent failure, the system is OK at this time. ■

   NO—Go to step 5.
5. Turn the ignition switch to LOCK (0).
6. Disconnect the input shaft (mainshaft) speed sensor connector.
7. Turn the ignition switch to ON (II).
8. Measure the voltage between input shaft (mainshaft) speed sensor connector terminal No. 1 and body ground.

INPUT SHAFT (MAINSHAFT) SPEED SENSOR CONNECTOR

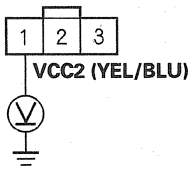

Wire side of female terminals

Is there about 5 V?

YES—Go to step 9.

NO—Repair an open in the wire between PCM connector terminal C14 and the input shaft (mainshaft) speed sensor, then go to step 15.

9. Measure the voltage between input shaft (mainshaft) speed sensor connector terminal No. 2 and body ground.

INPUT SHAFT (MAINSHAFT) SPEED SENSOR CONNECTOR

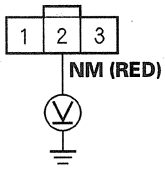

Wire side of female terminals

Is there about 5 V?

YES—Go to step 10.

NO—Go to step 11.

10. Check for continuity between input shaft (mainshaft) speed sensor connector terminal No. 3 and body ground.

INPUT SHAFT (MAINSHAFT) SPEED SENSOR CONNECTOR

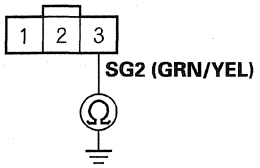

Wire side of female terminals

Is there continuity?

YES—Replace the input shaft (mainshaft) speed sensor (see page 14-191), then go to step 15.

NO—Repair an open in the wire between the input shaft (mainshaft) speed sensor connector and PCM connector terminal C12, then go to step 15.

11. Turn the ignition switch to LOCK (0).
12. Jump the SCS line with the HDS.
13. Disconnect PCM connector D (17P).
14. Check for continuity between input shaft (mainshaft) speed sensor connector terminal No. 2 and body ground.

INPUT SHAFT (MAINSHAFT) SPEED SENSOR CONNECTOR

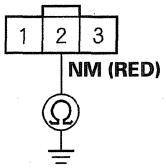

Wire side of female terminals

Is there continuity?

YES—Repair a short to body ground in the wire between PCM connector terminal D8 and the input shaft (mainshaft) speed sensor, then go to step 15.

NO—Repair an open in the wire between PCM connector terminal D8 and the input shaft (mainshaft) speed sensor, then go to step 15.

15. Reconnect all connectors.
16. Turn the ignition switch to ON (II).
17. Clear the DTC with the HDS.
18. Start the engine, disable the VSA by pressing the VSA OFF button, run the vehicle with the shift lever in D, and at speeds over 12 mph (20 km/h). Check the input shaft (mainshaft) speed and output shaft (countershaft) speed in the Data List with the HDS. Slow down, and stop the wheels.

Are they same speed?

YES—Troubleshooting is complete.■

NO—Go to step 1.

DTC Troubleshooting (cont'd)

DTC P0722: Output Shaft (Countershaft) Speed Sensor Circuit (No Signal Input)

DTC P0723: Output Shaft (Countershaft) Speed Sensor (Intermittent Failure)

NOTE: This code is caused by an electrical circuit problem and cannot be caused by a mechanical problem in the transmission.

1. Turn the ignition switch to ON (II).
2. Clear the DTC with the HDS.
3. Raise the vehicle on a lift, make sure it is securely supported, and allow the all four wheels to rotate freely.
4. Start the engine, disable the VSA by pressing the VSA OFF button, run the vehicle with the shift lever in D, and at speeds over 12 mph (20 km/h). Check the input shaft (mainshaft) speed and the output shaft (countershaft) speed in the Data List with the HDS. Slow down, and stop the wheels.

   Are they same speed?

   YES—Intermittent failure, the system is OK at this time.■

   NO—Go to step 5.
5. Turn the ignition switch to LOCK (0).
6. Disconnect the output shaft (countershaft) speed sensor connector.
7. Turn the ignition switch to ON (II).
8. Measure the voltage between output shaft (countershaft) speed sensor connector terminal No. 1 and body ground.

OUTPUT SHAFT (COUNTERSHAFT) SPEED SENSOR CONNECTOR

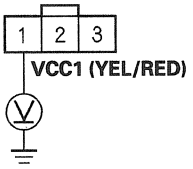

Wire side of female terminals

Is there about 5 V?

YES—Go to step 9.

NO—Repair an open in the wire between PCM connector terminal C6 and the output shaft (countershaft) speed sensor, then go to step 15.

9. Measure the voltage between output shaft (countershaft) speed sensor connector terminal No. 2 and body ground.

OUTPUT SHAFT (COUNTERSHAFT) SPEED SENSOR CONNECTOR

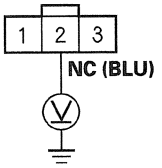

Wire side of female terminals

Is there about 5 V?

YES—Go to step 10.

NO—Go to step 11.

10. Check for continuity between output shaft (countershaft) speed sensor connector terminal No. 3 and body ground.

OUTPUT SHAFT (COUNTERSHAFT) SPEED SENSOR CONNECTOR

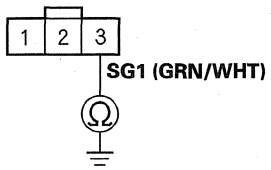

Wire side of female terminals

Is there continuity?

YES—Replace the output shaft (countershaft) speed sensor (see page 14-192), then go to step 15.

NO—Repair an open in the wire between the output shaft (countershaft) speed sensor and PCM connector terminal C4, then go to step 15.

11. Turn the ignition switch to LOCK (0).

12. Jump the SCS line with the HDS.

13. Disconnect PCM connector B (24P).

14. Check for continuity between output shaft (countershaft) speed sensor connector terminal No. 2 and body ground.

OUTPUT SHAFT (COUNTERSHAFT) SPEED SENSOR CONNECTOR

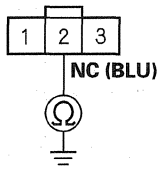

Wire side of female terminals

Is there continuity?

YES—Repair a short to body ground in the wire between PCM connector terminal B19 and the output shaft (countershaft) speed sensor, then go to step 15.

NO—Repair an open in the wire between PCM connector terminal B19 and the output shaft (countershaft) speed sensor, then go to step 15.

15. Reconnect all connectors.

16. Turn the ignition switch to ON (II).

17. Clear the DTC with the HDS.

18. Start the engine, disable the VSA by pressing the VSA OFF button, run the vehicle with the shift lever in D, and at speeds over 12 mph (20 km/h). Check the input shaft (mainshaft) speed and output shaft (countershaft) speed in the Data List with the HDS. Slow down, and stop the wheels.

Are they same speed?

YES—Troubleshooting is complete.■

NO—Go to step 1.

DTC Troubleshooting (cont'd)

DTC P0731: 1st Gear Incorrect Ratio

NOTE: Before you troubleshoot, record all freeze data and any on-board snapshot, and review General Troubleshooting Information (see page 14-4).

1. Warm up the engine to normal operating temperature (the radiator fan comes on).

2. Make sure that the transmission is filled to the proper level, and check for fluid leaks.

3. Drain the ATF (see step 4 on page 14-196) through a strainer. Inspect the strainer for metal debris or excessive clutch material.

   Does the strainer have metal debris or excessive clutch material?

   YES—Replace the transmission, then go to step 11.

   NO—Replace the ATF (see step 6 on page 14-196), then go to step 4.

4. Measure the line pressure (see page 14-174).

   Is the line pressure within the service limits?

   YES—Go to step 5.

   NO—Repair the ATF pump and the regulator valve, or replace the transmission, then go to step 10.

5. Measure the 1st clutch pressure (see page 14-174).

   Is the 1st clutch pressure within the service limits?

   YES—Go to step 6.

   NO—Shift valves B and C are stuck. Repair these valves and the related hydraulic circuit, or replace the transmission, then go to step 10.

6. Clear the DTC with the HDS.

7. Start the engine. With the brake pedal pressed, shift to D, and press the accelerator pedal for 5 seconds at about 3 % opened-throttle, then release the accelerator until the engine speed comes down below 1,000 rpm. Release the brake pedal, and drive the vehicle in 1st gear for at least 1 second, then press the accelerator pedal so that the transmission upshifts to 2nd gear, then 3rd gear. Slow down and stop the wheels.

8. Check for Pending or Confirmed DTCs with the HDS.

   Is DTC P0731 indicated?

   YES—Repair the 1st clutch, or replace the transmission, then go to step 10.

   NO—Go to step 9.

9. Monitor the OBD STATUS for P0731 in the DTCs MENU with the HDS.

   Does the HDS indicate PASSED?

   YES—Intermittent failure, the system is OK at this time. If any other Pending or Confirmed DTCs were indicated on step 8, go to the indicated DTC's troubleshooting. ■

   NO—Check for poor connections and loose terminals at the input shaft (mainshaft) speed sensor, the output shaft (countershaft) speed sensor, and the PCM, then recheck. If the HDS indicates NOT COMPLETED, return to step 7 and recheck.

10. Clear the DTC with the HDS.

11. Start the engine. With the brake pedal pressed, shift to D, and press the accelerator pedal for 5 seconds at about 3 % opened-throttle, then release the accelerator until the engine speed comes down below 1,000 rpm. Release the brake pedal, and drive the vehicle in 1st gear for at least 1 second, then press the accelerator pedal so that the transmission upshifts to 2nd gear, then 3rd gear. Slow down and stop the wheels.

12. Check for Pending or Confirmed DTCs with the HDS.

    Is DTC P0731 indicated?

    YES—Check for poor connections and loose terminals at the input shaft (mainshaft) speed sensor, the output shaft (countershaft) speed sensor, and the PCM, then go to step 1.

    NO—Go to step 13.

13. Monitor the OBD STATUS for P0731 in the DTCs MENU with the HDS.

    Does the HDS indicate PASSED?

    YES—Troubleshooting is complete. If any other DTCs were indicated on step 12, go to the indicated DTC's troubleshooting. ■

    NO—Check for poor connections and loose terminals at the input shaft (mainshaft) speed sensor, the output shaft (countershaft) speed sensor, and the PCM, then go to step 4. If the HDS indicates NOT COMPLETED, return to step 11 and recheck.

DTC P0732: 2nd Gear Incorrect Ratio

NOTE: Before you troubleshoot, record all freeze data and any on-board snapshot, and review General Troubleshooting Information (see page 14-4).

1. Warm up the engine to normal operating temperature (the radiator fan comes on).

2. Make sure that the transmission is filled to the proper level, and check for fluid leaks.

3. Drain the ATF (see step 4 on page 14-196) through a strainer. Inspect the strainer for metal debris or excessive clutch material.

   Does the strainer have metal debris or excessive clutch material?

   YES—Replace the transmission, then go to step 11.

   NO—Replace the ATF (see step 6 on page 14-196), then go to step 4.

4. Measure the line pressure (see page 14-174).

   Is the line pressure within the service limits?

   YES—Go to step 5.

   NO—Repair the ATF pump and the regulator valve, or replace the transmission, then go to step 10.

5. Measure the 2nd clutch pressure (see page 14-174).

   Is the 2nd clutch pressure within the service limits?

   YES—Go to step 6.

   NO—Shift valves A, B, and C are stuck. Repair these valves and the hydraulic circuit, or replace the transmission, then go to step 10.

(cont'd)

DTC Troubleshooting (cont'd)

6. Clear the DTC with the HDS.
7. Test-drive the vehicle in 2nd gear in D at speeds over 9 mph (15 km/h) with the engine speed at 500 rpm or higher, for at least 12 seconds. Slow down and stop the wheels.
8. Check for Pending or Confirmed DTCs with the HDS.

   Is DTC P0732 indicated?

   YES—Repair the 2nd clutch, or replace the transmission, then go to step 10.

   NO—Go to step 9.
9. Monitor the OBD STATUS for P0732 in the DTCs MENU with the HDS.

   Does the HDS indicate PASSED?

   YES—Intermittent failure, the system is OK at this time. If any other Pending or Confirmed DTCs were indicated on step 8, go to the indicated DTC's troubleshooting. ■

   NO—Check for poor connections and loose terminals at the input shaft (mainshaft) speed sensor, the output shaft (countershaft) speed sensor, and the PCM, then recheck. If the HDS indicates NOT COMPLETED, return to step 7 and recheck.
10. Clear the DTC with the HDS.
11. Test-drive the vehicle in 2nd gear in D at speeds over 9 mph (15 km/h) with the engine speed at 500 rpm or higher, for at least 12 seconds. Slow down and stop the wheels.
12. Check for Pending or Confirmed DTCs with the HDS.

    Is DTC P0732 indicated?

    YES—Check for poor connections and loose terminals at the input shaft (mainshaft) speed sensor, the output shaft (countershaft) speed sensor, and the PCM, then go to step 1.

    NO—Go to step 13.
13. Monitor the OBD STATUS for P0732 in the DTCs MENU with the HDS.

    Does the HDS indicate PASSED?

    YES—Troubleshooting is complete. If any other Pending or Confirmed DTCs were indicated on step 12, go to the indicated DTC's troubleshooting. ■

    NO—Check for poor connections and loose terminals at the input shaft (mainshaft) speed sensor, the output shaft (countershaft) speed sensor, and the PCM, then go to step 4. If the HDS indicates NOT COMPLETED, return to step 11 and recheck.

DTC P0733: 3rd Gear Incorrect Ratio

NOTE: Before you troubleshoot, record all freeze data and any on-board snapshot, and review General Troubleshooting Information (see page 14-4).

1. Warm up the engine to normal operating temperature (the radiator fan comes on).

2. Make sure that the transmission is filled to the proper level, and check for fluid leaks.

3. Drain the ATF (see step 4 on page 14-196) through a strainer. Inspect the strainer for metal debris or excessive clutch material.

   Does the strainer have metal debris or excessive clutch material?

   YES—Replace the transmission, then go to step 11.

   NO—Replace the ATF (see step 6 on page 14-196), then go to step 4.

4. Measure the line pressure (see page 14-174).

   Is the line pressure within the service limits?

   YES—Go to step 5.

   NO—Repair the ATF pump and the regulator valve, or replace the transmission, then go to step 10.

5. Measure the 3rd clutch pressure (see page 14-174).

   Is the 3rd clutch pressure within the service limits?

   YES—Go to step 6.

   NO—Shift valves A, B, and C are stuck. Repair these valves and the hydraulic circuit, or replace the transmission, then go to step 10.

6. Clear the DTC with the HDS.

7. Test-drive the vehicle in 3rd gear in D at speeds over 9 mph (15 km/h) with the engine speed at 500 rpm or higher, for at least 12 seconds. Slow down and stop the wheels.

8. Check for Pending or Confirmed DTCs with the HDS.

   Is DTC P0733 indicated?

   YES—Repair the 3rd clutch, or replace the transmission, then go to step 10.

   NO—Go to step 9.

9. Monitor the OBD STATUS for P0733 in the DTCs MENU with the HDS.

   Does the HDS indicate PASSED?

   YES—Intermittent failure, the system is OK at this time. If any other Pending or Confirmed DTCs were indicated on step 8, go to the indicated DTC's troubleshooting. ■

   NO—Check for poor connections and loose terminals at the input shaft (mainshaft) speed sensor, the output shaft (countershaft) speed sensor, and the PCM, then recheck. If the HDS indicates NOT COMPLETED, return to step 7 and recheck.

(cont'd)

DTC Troubleshooting (cont'd)

10. Clear the DTC with the HDS.

11. Test-drive the vehicle in 3rd gear in D at speeds over 9 mph (15 km/h) with the engine speed at 500 rpm or higher, for at least 12 seconds. Slow down and stop the wheels.

12. Check for Pending or Confirmed DTCs with the HDS.

    Is DTC P0733 indicated?

    YES—Check for poor connections and loose terminals at the input shaft (mainshaft) speed sensor, the output shaft (countershaft) speed sensor, and the PCM, then go to step 1.

    NO—Go to step 13.

13. Monitor the OBD STATUS for P0733 in the DTCs MENU with the HDS.

    Does the HDS indicate PASSED?

    YES—Troubleshooting is complete. If any other Pending or Confirmed DTCs were indicated on step 12, go to the indicated DTC's troubleshooting. ■

    NO—Check for poor connections and loose terminals at the input shaft (mainshaft) speed sensor, the output shaft (countershaft) speed sensor, and the PCM, then go to step 4. If the HDS indicates NOT COMPLETED, return to step 11 and recheck.

DTC P0734: 4th Gear Incorrect Ratio

NOTE: Before you troubleshoot, record all freeze data and any on-board snapshot, and review General Troubleshooting Information (see page 14-4).

1. Warm up the engine to normal operating temperature (the radiator fan comes on).

2. Make sure that the transmission is filled to the proper level, and check for fluid leaks.

3. Drain the ATF (see step 4 on page 14-196) through a strainer. Inspect the strainer for metal debris or excessive clutch material.

   Does the strainer have metal debris or excessive clutch material?

   YES—Replace the transmission, then go to step 11.

   NO—Replace the ATF (see step 6 on page 14-196), then go to step 4.

4. Measure the line pressure (see page 14-174).

   Is the line pressure within the service limits?

   YES—Go to step 5.

   NO—Repair the ATF pump and the regulator valve, or replace the transmission, then go to step 10.

5. Measure the 4th clutch pressure (see page 14-174).

   Is the 4th clutch pressure within the service limits?

   YES—Go to step 6.

   NO—Shift valves A, B, C, and D are stuck. Repair these valves and the hydraulic circuit, or replace the transmission, then go to step 10.

6. Clear the DTC with the HDS.

7. Test-drive the vehicle in 4th gear in D at speeds over 9 mph (15 km/h) with the engine speed at 500 rpm or higher, for at least 12 seconds. Slow down and stop the wheels.

8. Check for Pending or Confirmed DTCs with the HDS.

   Is DTC P0734 indicated?

   YES—Repair the 4th clutch, or replace the transmission, then go to step 10.

   NO—Go to step 9.

9. Monitor the OBD STATUS for P0734 in the DTCs MENU with the HDS.

   Does the HDS indicate PASSED?

   YES—Intermittent failure, the system is OK at this time. If any other Pending or Confirmed DTCs were indicated on step 8, go to the indicated DTC's troubleshooting. ■

   NO—Check for poor connections and loose terminals at the input shaft (mainshaft) speed sensor, the output shaft (countershaft) speed sensor, and the PCM, then recheck. If the HDS indicates NOT COMPLETED, return to step 7 and recheck.

10. Clear the DTC with the HDS.

11. Test-drive the vehicle in 4th gear in D at speeds over 9 mph (15 km/h) with the engine speed at 500 rpm or higher, for at least 12 seconds. Slow down and stop the wheels.

12. Check for Pending or Confirmed DTCs with the HDS.

    Is DTC P0734 indicated?

    YES—Check for poor connections and loose terminals at the input shaft (mainshaft) speed sensor, the output shaft (countershaft) speed sensor, and the PCM, then go to step 1.

    NO—Go to step 13.

13. Monitor the OBD STATUS for P0734 in the DTCs MENU with the HDS.

    Does the HDS indicate PASSED?

    YES—Troubleshooting is complete. If any other Pending or Confirmed DTCs were indicated on step 12, go to the indicated DTC's troubleshooting. ■

    NO—Check for poor connections and loose terminals at the input shaft (mainshaft) speed sensor, the output shaft (countershaft) speed sensor, and the PCM, then go to step 4. If the HDS indicates NOT COMPLETED, return to step 11 and recheck.

DTC Troubleshooting (cont'd)

DTC P0735: 5th Gear Incorrect Ratio

NOTE: Before you troubleshoot, record all freeze data and any on-board snapshot, and review General Troubleshooting Information (see page 14-4).

1. Warm up the engine to normal operating temperature (the radiator fan comes on).
2. Make sure that the transmission is filled to the proper level, and check for fluid leaks.
3. Drain the ATF (see step 4 on page 14-196) through a strainer. Inspect the strainer for metal debris or excessive clutch material.

   Does the strainer have metal debris or excessive clutch material?

   YES—Replace the transmission, then go to step 11.

   NO—Replace the ATF (see step 6 on page 14-196), then go to step 4.
4. Measure the line pressure (see page 14-174).

   Is the line pressure within the service limits?

   YES—Go to step 5.

   NO—Repair the ATF pump and the regulator valve, or replace the transmission, then go to step 10.
5. Measure the 5th clutch pressure (see page 14-174).

   Is the 5th clutch pressure within the service limits?

   YES—Go to step 6.

   NO—Shift valves A, B, C, and D are stuck. Repair these valves and the hydraulic circuit, or replace the transmission, then go to step 10.
6. Clear the DTC with the HDS.
7. Test-drive the vehicle in 5th gear in D at speeds over 9 mph (15 km/h) with the engine speed at 500 rpm or higher, for at least 12 seconds. Slow down and stop the wheels.
8. Check for Pending or Confirmed DTCs with the HDS.

   Is DTC P0735 indicated?

   YES—Repair the 5th clutch, or replace the transmission, then go to step 10.

   NO—Go to step 9.
9. Monitor the OBD STATUS for P0735 in the DTCs MENU with the HDS.

   Does the HDS indicate PASSED?

   YES—Intermittent failure, the system is OK at this time. If any other Pending or Confirmed DTCs were indicated on step 8, go to the indicated DTC's troubleshooting. ■

   NO—Check for poor connections and loose terminals at the input shaft (mainshaft) speed sensor, the output shaft (countershaft) speed sensor, and the PCM, then recheck. If the HDS indicates NOT COMPLETED, return to step 7 and recheck.

10. Clear the DTC with the HDS.

11. Test-drive the vehicle in 5th gear in D at speeds over 9 mph (15 km/h) with the engine speed at 500 rpm or higher, for at least 12 seconds. Slow down and stop the wheels.

12. Check for Pending or Confirmed DTCs with the HDS.

    Is DTC P0735 indicated?

    YES—Check for poor connections and loose terminals at the input shaft (mainshaft) speed sensor, the output shaft (countershaft) speed sensor, and the PCM, then go to step 1.

    NO—Go to step 13.

13. Monitor the OBD STATUS for P0735 in the DTCs MENU with the HDS.

    Does the HDS indicate PASSED?

    YES—Troubleshooting is complete. If any other Pending or Confirmed DTCs were indicated on step 12, go to the indicated DTC's troubleshooting. ■

    NO—Check for poor connections and loose terminals at the input shaft (mainshaft) speed sensor, the output shaft (countershaft) speed sensor, and the PCM, then go to step 4. If the HDS indicates NOT COMPLETED, return to step 11 and recheck.

DTC P0741: Torque Converter Clutch Circuit Performance or Stuck OFF

NOTE: Before you troubleshoot, record all freeze data and any on-board snapshot, and review General Troubleshooting Information (see page 14-4).

1. Warm up the engine to normal operating temperature (the radiator fan comes on).

2. Make sure that the transmission is filled to the proper level, and check for fluid leaks.

3. Drain the ATF (see step 4 on page 14-196) through a strainer. Inspect the strainer for metal debris or excessive clutch material.

   Does the strainer have metal debris or excessive clutch material?

   YES—Replace the transmission, then go to step 12.

   NO—Replace the ATF (see step 6 on page 14-196), then go to step 4.

4. Clear the DTC with the HDS.

5. Select Shift Solenoid D in the Miscellaneous Test Menu, and check that shift solenoid valve D operates with the HDS.

   Is a clicking sound heard?

   YES—Go to step 6.

   NO—Replace shift solenoid valve D (see page 14-178), then go to step 11.

6. Run the engine until the engine coolant temperature reaches 176 °F (80 °C).

7. Select Clutch Pressure Control (Linear) Solenoid C in the Miscellaneous Test Menu, and test A/T clutch pressure control solenoid valve C with the HDS.

   Does the HDS indicate NORMAL?

   YES—Go to step 8.

   NO—Follow the instructions indicated on the HDS by the test result, but if the HDS has not determined the cause of the failure, go to step 10. If any part is replaced, go to step 11.

(cont'd)

DTC Troubleshooting (cont'd)

8. Test-drive the vehicle on a level road with a steady throttle at 60 mph (96 km/h) for at least 22 seconds, or test-drive the vehicle for several minutes under the same conditions as those indicated by the freeze data.

9. Monitor the OBD STATUS for P0741 in the DTCs MENU with the HDS.

   Does the HDS indicate FAILED?

   YES—Repair the faulty torque converter clutch mechanism, torque converter clutch hydraulic circuit, lock-up shift valve, or lock-up control valve, or replace the transmission, then go to step 11.

   NO—Intermittent failure, the system is OK at this time. If the HDS indicates NOT COMPLETED, return to step 8 and recheck. ■

10. Inspect A/T clutch pressure control solenoid valve C (see page 14-187).

    Does A/T clutch pressure control solenoid valve C work properly?

    YES—Repair the hydraulic system related to the lock-up shift valve, lock-up control valve, and lock-up timing valve, or replace the transmission, then go to step 11.

    NO—Replace A/T clutch pressure control solenoid valve C (see page 14-190), then go to step 11.

11. Clear the DTC with the HDS.

12. Test-drive the vehicle on a level road with a steady throttle at 60 mph (96 km/h) for at least 22 seconds, or test-drive the vehicle for several minutes under the same conditions as those indicated by the freeze data.

13. Monitor the OBD STATUS for P0741 in the DTCs MENU with the HDS.

    Does the HDS indicate PASSED?

    YES—Troubleshooting is complete. ■

    NO—Return to step 5 and recheck. If the HDS indicates NOT COMPLETED, return to step 12 and recheck.

DTC P0746: A/T Clutch Pressure Control Solenoid Valve A Stuck OFF

DTC P0747: A/T Clutch Pressure Control Solenoid Valve A Stuck ON

NOTE: Before you troubleshoot, record all freeze data and any on-board snapshot, and review General Troubleshooting Information (see page 14-4).

1. Warm up the engine to normal operating temperature (the radiator fan comes on).

2. Make sure that the transmission is filled to the proper level, and check for fluid leaks.

3. Drain the ATF (see step 4 on page 14-196) through a strainer. Inspect the strainer for metal debris or excessive clutch material.

   Does the strainer have metal debris or excessive clutch material?

   YES—Replace the transmission, then go to step 11.

   NO—Replace the ATF (see step 6 on page 14-196), then go to step 4.

4. Clear the DTC with the HDS.

5. Test-drive the vehicle with the shift lever in D for at least 20 seconds, and let the transmission shift through all five gears, then slow down to a stop.

6. Monitor the OBD STATUS for P0746 or P0747 in the DTCs MENU with the HDS.

   Does the HDS indicate FAILED?

   YES—Go to step 7.

   NO—Intermittent failure, the system is OK at this time. If the HDS indicates NOT COMPLETED, return to step 5 and recheck. ■

7. Clear the DTC with the HDS.

8. Select Clutch Pressure Control (Linear) Solenoid A in the Miscellaneous Test Menu, and test A/T clutch pressure control solenoid valve A with the HDS.

   Does the HDS indicate NORMAL?

   YES—Intermittent failure, the system is OK at this time. ■

   NO—Follow the instructions indicated on the HDS by the test result, but if the HDS has not determined the cause of the failure, go to step 9. If any part is replaced, go to step 10.

9. Inspect A/T clutch pressure control solenoid valve A (see page 14-182).

   Does A/T clutch pressure control solenoid valve A work properly?

   YES—Repair the hydraulic system related with shift valve A, or replace the transmission, then go to step 10.

   NO—Replace A/T clutch pressure control solenoid valve A (see page 14-185), then go to step 10.

10. Clear the DTC with the HDS.

11. Test-drive the vehicle with the shift lever in D for at least 20 seconds, and let the transmission shift through all five gears, then slow down to a stop.

12. Monitor the OBD STATUS for P0746 or P0747 in the DTCs MENU with the HDS.

    Does the HDS indicate PASSED?

    YES—Troubleshooting is complete. ■

    NO—Return to step 7 and recheck. If the HDS indicates NOT COMPLETED, return to step 11 and recheck.

DTC P0751: Shift Solenoid Valve A Stuck OFF

DTC P0752: Shift Solenoid Valve A Stuck ON

NOTE: Before you troubleshoot, record all freeze data and any on-board snapshot, and review General Troubleshooting Information (see page 14-4).

1. Warm up the engine to normal operating temperature (the radiator fan comes on).

2. Make sure that the transmission is filled to the proper level, and check for fluid leaks.

3. Drain the ATF (see step 4 on page 14-196) through a strainer. Inspect the strainer for metal debris or excessive clutch material.

   Does the strainer have metal debris or excessive clutch material?

   YES—Replace the transmission, then go to step 12.

   NO—Replace the ATF (see step 6 on page 14-196), then go to step 4.

4. Clear the DTC with the HDS.

5. Test-drive the vehicle with the shift lever in D for at least 11 seconds, and let the transmission shift through all five gears, then slow down to a stop.

6. Monitor the OBD STATUS for P0751 or P0752 in the DTCs MENU with the HDS.

   Does the HDS indicate FAILED?

   YES—Go to step 7.

   NO—Intermittent failure, the system is OK at this time. If the HDS indicates NOT COMPLETED, return to step 5 and recheck. ■

7. Clear the DTC with the HDS.

(cont'd)

DTC Troubleshooting (cont'd)

8. Select Shift Solenoid A in the Miscellaneous Test Menu, and check that shift solenoid valve A operates with the HDS.

   Is a clicking sound heard?

   YES—Go to step 9.

   NO—Replace shift solenoid valve A (see page 14-178), then go to step 11.

9. Test-drive the vehicle with the shift lever in D for at least 11 seconds, and let the transmission shift through all five gears, then slow down to a stop.

10. Monitor the OBD STATUS for P0751 or P0752 in the DTCs MENU with the HDS.

    Does the HDS indicate FAILED?

    YES—Repair shift valve A, or replace the transmission, then go to step 11.

    NO—Intermittent failure, the system is OK at this time. If the HDS indicates NOT COMPLETED, return to step 9 and recheck. ■

11. Clear the DTC with the HDS.

12. Test-drive the vehicle with the shift lever in D for at least 11 seconds, and let the transmission shift through all five gears, then slow down to a stop.

13. Monitor the OBD STATUS for P0751 or P0752 in the DTCs MENU with the HDS.

    Does the HDS indicate PASSED?

    YES—Troubleshooting is complete. ■

    NO—Return to step 7 and recheck. If the HDS indicates NOT COMPLETED, return to step 12 and recheck.

DTC P0756: Shift Solenoid Valve B Stuck OFF

DTC P0757: Shift Solenoid Valve B Stuck ON

NOTE: Before you troubleshoot, record all freeze data and any on-board snapshot, and review General Troubleshooting Information (see page 14-4).

1. Warm up the engine to normal operating temperature (the radiator fan comes on).

2. Make sure that the transmission is filled to the proper level, and check for fluid leaks.

3. Drain the ATF (see step 4 on page 14-196) through a strainer. Inspect the strainer for metal debris or excessive clutch material.

   Does the strainer have metal debris or excessive clutch material?

   YES—Replace the transmission, then go to step 12.

   NO—Replace the ATF (see step 6 on page 14-196), then go to step 4.

4. Clear the DTC with the HDS.

5. Test-drive the vehicle with the shift lever in D for at least 20 seconds, and let the transmission shift through all five gears, then slow down to a stop.

6. Monitor the OBD STATUS for P0756 or P0757 in the DTCs MENU with the HDS.

   Does the HDS indicate FAILED?

   YES—Go to step 7.

   NO—Intermittent failure, the system is OK at this time. If the HDS indicates NOT COMPLETED, return to step 5 and recheck. ■

7. Clear the DTC with the HDS.

8. Select Shift Solenoid B in the Miscellaneous Test Menu, and check that shift solenoid valve B operates with the HDS.

   Is a clicking sound heard?

   YES—Go to step 9.

   NO—Replace shift solenoid valve B (see page 14-178), then go to step 11.

9. Test-drive the vehicle with the shift lever in D for at least 20 seconds, and let the transmission shift through all five gears, then slow down to a stop.

10. Monitor the OBD STATUS for P0756 or P0757 in the DTCs MENU with the HDS.

    Does the HDS indicate FAILED?

    YES—Repair shift valve B, or replace the transmission, then go to step 11.

    NO—Intermittent failure, the system is OK at this time. If the HDS indicates NOT COMPLETED, return to step 9 and recheck. ■

11. Clear the DTC with the HDS.

12. Test-drive the vehicle with the shift lever in D for at least 20 seconds, and let the transmission shift through all five gears, then slow down to a stop.

13. Monitor the OBD STATUS for P0756 or P0757 in the DTCs MENU with the HDS.

    Does the HDS indicate PASSED?

    YES—Troubleshooting is complete. ■

    NO—Return to step 7 and recheck. If the HDS indicates NOT COMPLETED, return to step 12 and recheck.

DTC P0761: Shift Solenoid Valve C Stuck OFF

DTC P0762: Shift Solenoid Valve C Stuck ON

NOTE: Before you troubleshoot, record all freeze data and any on-board snapshot, and review General Troubleshooting Information (see page 14-4).

1. Warm up the engine to normal operating temperature (the radiator fan comes on).

2. Make sure that the transmission is filled to the proper level, and check for fluid leaks.

3. Drain the ATF (see step 4 on page 14-196) through a strainer. Inspect the strainer for metal debris or excessive clutch material.

   Does the strainer have metal debris or excessive clutch material?

   YES—Replace the transmission, then go to step 12.

   NO—Replace the ATF (see step 6 on page 14-196), then go to step 4.

4. Clear the DTC with the HDS.

5. Test-drive the vehicle with the shift lever in D for at least 20 seconds, and let the transmission shift through all five gears, then slow down to a stop.

6. Monitor the OBD STATUS for P0761 or P0762 in the DTCs MENU with the HDS.

   Does the HDS indicate FAILED?

   YES—Go to step 7.

   NO—Intermittent failure, the system is OK at this time. If the HDS indicates NOT COMPLETED, return to step 5 and recheck. ■

7. Clear the DTC with the HDS.

(cont'd)

DTC Troubleshooting (cont'd)

8. Select Shift Solenoid C in the Miscellaneous Test Menu, and check that shift solenoid valve C operates with the HDS.

   Is a clicking sound heard?

   YES—Go to step 9.

   NO—Replace shift solenoid valve C (see page 14-178), then go to step 11.

9. Test-drive the vehicle with the shift lever in D for at least 20 seconds, and let the transmission shift through all five gears, then slow down to a stop.

10. Monitor the OBD STATUS for P0761 or P0762 in the DTCs MENU with the HDS.

    Does the HDS indicate FAILED?

    YES—Repair shift valve C, or replace the transmission, then go to step 11.

    NO—Intermittent failure, the system is OK at this time. If the HDS indicates NOT COMPLETED, return to step 9 and recheck. ■

11. Clear the DTC with the HDS.

12. Test-drive the vehicle with the shift lever in D for at least 20 seconds, and let the transmission shift through all five gears, then slow down to a stop.

13. Monitor the OBD STATUS for P0761 or P0762 in the DTCs MENU with the HDS.

    Does the HDS indicate PASSED?

    YES—Troubleshooting is complete. ■

    NO—Return to step 7 and recheck. If the HDS indicates NOT COMPLETED, return to step 12 and recheck.

DTC P0766: Shift Solenoid Valve D Stuck OFF

DTC P0767: Shift Solenoid Valve D Stuck ON

NOTE: Before you troubleshoot, record all freeze data and any on-board snapshot, and review General Troubleshooting Information (see page 14-4).

1. Warm up the engine to normal operating temperature (the radiator fan comes on).

2. Make sure that the transmission is filled to the proper level, and check for fluid leaks.

3. Drain the ATF (see step 4 on page 14-196) through a strainer. Inspect the strainer for metal debris or excessive clutch material.

   Does the strainer have metal debris or excessive clutch material?

   YES—Replace the transmission, then go to step 12.

   NO—Replace the ATF (see step 6 on page 14-196), then go to step 4.

4. Clear the DTC with the HDS.

5. Test-drive the vehicle with the shift lever in D for at least 11 seconds, and let the transmission shift through all five gears, then slow down to a stop.

6. Monitor the OBD STATUS for P0766 or P0767 in the DTCs MENU with the HDS.

   Does the HDS indicate FAILED?

   YES—Go to step 7.

   NO—Intermittent failure, the system is OK at this time. If the HDS indicates NOT COMPLETED, return to step 5 and recheck. ■

7. Clear the DTC with the HDS.

8. Select Shift Solenoid D in the Miscellaneous Test Menu, and check that shift solenoid valve D operates with the HDS.

   Is a clicking sound heard?

   YES—Go to step 9.

   NO—Replace shift solenoid valve D (see page 14-178), then go to step 11.

9. Test-drive the vehicle with the shift lever in D for at least 11 seconds, and let the transmission shift through all five gears, then slow down to a stop.

10. Monitor the OBD STATUS for P0766 or P0767 in the DTCs MENU with the HDS.

    Does the HDS indicate FAILED?

    YES—Repair shift valve D, or replace the transmission, then go to step 11.

    NO—Intermittent failure, the system is OK at this time. If the HDS indicates NOT COMPLETED, return to step 9 and recheck. ■

11. Clear the DTC with the HDS.

12. Test-drive the vehicle with the shift lever in D for at least 11 seconds, and let the transmission shift through all five gears, then slow down to a stop.

13. Monitor the OBD STATUS for P0766 or P0767 in the DTCs MENU with the HDS.

    Does the HDS indicate PASSED?

    YES—Troubleshooting is complete. ■

    NO—Return to step 7 and recheck. If the HDS indicates NOT COMPLETED, return to step 12 and recheck.

DTC P0776: A/T Clutch Pressure Control Solenoid Valve B Stuck OFF

DTC P0777: A/T Clutch Pressure Control Solenoid Valve B Stuck ON

NOTE: Before you troubleshoot, record all freeze data and any on-board snapshot, and review General Troubleshooting Information (see page 14-4).

1. Warm up the engine to normal operating temperature (the radiator fan comes on).

2. Make sure that the transmission is filled to the proper level, and check for fluid leaks.

3. Drain the ATF (see step 4 on page 14-196) through a strainer. Inspect the strainer for metal debris or excessive clutch material.

   Does the strainer have metal debris or excessive clutch material?

   YES—Replace the transmission, then go to step 11.

   NO—Replace the ATF (see step 6 on page 14-196), then go to step 4.

4. Clear the DTC with the HDS.

5. Test-drive the vehicle with the shift lever in D for at least 20 seconds, and let the transmission shift through all five gears, then slow down to a stop.

6. Monitor the OBD STATUS for P0776 or P0777 in the DTCs MENU with the HDS.

   Does the HDS indicate FAILED?

   YES—Go to step 7.

   NO—Intermittent failure, the system is OK at this time. If the HDS indicates NOT COMPLETED, return to step 5 and recheck. ■

(cont'd)

DTC Troubleshooting (cont'd)

7. Clear the DTC with the HDS.

8. Select Clutch Pressure Control (Linear) Solenoid B in the Miscellaneous Test Menu, and test A/T clutch pressure control solenoid valve B with the HDS.

   Does the HDS indicate NORMAL?

   YES—Intermittent failure, the system is OK at this time. ■

   NO—Follow the instructions indicated on the HDS by the test result, but if the HDS has not determined the cause of the failure, go to step 9. If any part is replaced, go to step 10.

9. Inspect A/T clutch pressure control solenoid valve B (see page 14-182).

   Does A/T clutch pressure control solenoid valve B work properly?

   YES—Repair the hydraulic system related to shift valve B, or replace the transmission, then go to step 10.

   NO—Replace A/T clutch pressure control solenoid valve B (see page 14-185), then go to step 10.

10. Clear the DTC with the HDS.

11. Test-drive the vehicle with the shift lever in D for at least 20 seconds, and let the transmission shift through all five gears, then slow down to a stop.

12. Monitor the OBD STATUS for P0776 or P0777 in the DTCs MENU with the HDS.

    Does the HDS indicate PASSED?

    YES—Troubleshooting is complete. ■

    NO—Return to step 7 and recheck. If the HDS indicates NOT COMPLETED, return to step 11 and recheck.

DTC P0796: A/T Clutch Pressure Control Solenoid Valve C Stuck OFF

NOTE: Before you troubleshoot, record all freeze data and any on-board snapshot, and review General Troubleshooting Information (see page 14-4).

1. Warm up the engine to normal operating temperature (the radiator fan comes on).

2. Make sure that the transmission is filled to the proper level, and check for fluid leaks.

3. Drain the ATF (see step 4 on page 14-196) through a strainer. Inspect the strainer for metal debris or excessive clutch material.

   Does the strainer have metal debris or excessive clutch material?

   YES—Replace the transmission, then go to step 11.

   NO—Replace the ATF (see step 6 on page 14-196), then go to step 4.

4. Clear the DTC with the HDS.

5. Start the engine. With the brake pedal pressed, shift to D, and wait for at least 3 seconds. Shift to R, wait for at least 3 seconds, then drive the vehicle for at least 3 seconds. Slow down and stop the wheels.

6. Monitor the OBD STATUS for P0796 in the DTCs MENU with the HDS.

   Does the HDS indicate FAILED?

   YES—Go to step 7.

   NO—Intermittent failure, the system is OK at this time. If the HDS indicates NOT COMPLETED, return to step 5 and recheck. ■

7. Clear the DTC with the HDS.

8. Select Clutch Pressure Control (Linear) Solenoid C in the Miscellaneous Test Menu, and test A/T clutch pressure control solenoid valve C with the HDS.

   Does the HDS indicate NORMAL?

   YES—Intermittent failure, the system is OK at this time.■

   NO—Follow the instructions indicated on the HDS by the test result, but if the HDS has not determined the cause of the failure, go to step 9. If any part is replaced, go to step 10.

9. Inspect A/T clutch pressure control solenoid valve C (see page 14-187).

   Does A/T clutch pressure control solenoid valve C work properly?

   YES—Repair the hydraulic system related to shift valve C, or replace the transmission, then go to step 10.

   NO—Replace A/T clutch pressure control solenoid valve C (see page 14-190), then go to step 10.

10. Clear the DTC with the HDS.

11. Test-drive the vehicle with the shift lever in D, and let the transmission shift through all five gears, then slow down to a stop.

12. Monitor the OBD STATUS for P0796 in the DTCs MENU with the HDS.

    Does the HDS indicate PASSED?

    YES—Troubleshooting is complete.■

    NO—Return to step 7 and recheck. If the HDS indicates NOT COMPLETED, return to step 11 and recheck.

DTC P0797: A/T Clutch Pressure Control Solenoid Valve C Stuck ON

NOTE: Before you troubleshoot, record all freeze data and any on-board snapshot, and review General Troubleshooting Information (see page 14-4).

1. Warm up the engine to normal operating temperature (the radiator fan comes on).

2. Make sure that the transmission is filled to the proper level, and check for fluid leaks.

3. Drain the ATF (see step 4 on page 14-196) through a strainer. Inspect the strainer for metal debris or excessive clutch material.

   Does the strainer have metal debris or excessive clutch material?

   YES—Replace the transmission, then go to step 11.

   NO—Replace the ATF (see step 6 on page 14-196), then go to step 4.

4. Clear the DTC with the HDS.

5. Test-drive the vehicle with the shift lever in D for at least 11 seconds, and let the transmission shift through all five gears, then slow down to a stop.

6. Monitor the OBD STATUS for P0797 in the DTCs MENU with the HDS.

   Does the HDS indicate FAILED?

   YES—Go to step 7.

   NO—Intermittent failure, the system is OK at this time. If the HDS indicates NOT COMPLETED, return to step 5 and recheck.■

(cont'd)

DTC Troubleshooting (cont'd)

7. Clear the DTC with the HDS.

8. Select Clutch Pressure Control (Linear) Solenoid C in the Miscellaneous Test Menu, and test A/T clutch pressure control solenoid valve C with the HDS.

   Does the HDS indicate NORMAL?

   YES—Intermittent failure, the system is OK at this time. ■

   NO—Follow the instructions indicated on the HDS by the test result, but if the HDS has not determined the cause of the failure, go to step 9. If any part is replaced, go to step 10.

9. Inspect A/T clutch pressure control solenoid valve C (see page 14-187).

   Does A/T clutch pressure control solenoid valve C work properly?

   YES—Repair the hydraulic system related to shift valve C, or replace the transmission, then go to step 10.

   NO—Replace A/T clutch pressure control solenoid valve C (see page 14-190), then go to step 10.

10. Clear the DTC with the HDS.

11. Test-drive the vehicle with the shift lever in D for at least 11 seconds, and let the transmission shift through all five gears, then slow down to a stop.

12. Monitor the OBD STATUS for P0797 in the DTCs MENU with the HDS.

    Does the HDS indicate PASSED?

    YES—Troubleshooting is complete. ■

    NO—Return to step 7 and recheck. If the HDS indicates NOT COMPLETED, return to step 11 and recheck.

DTC P0812: Transmission Range Switch ATP R Switch (Open)

NOTE:
- Before you troubleshoot, record all freeze data and any on-board snapshot, and review General Troubleshooting Information (see page 14-4).
- This code is caused by an electrical circuit problem and cannot be caused by a mechanical problem in the transmission.

1. Turn the ignition switch to ON (II).

2. Shift to R, and verify the A/T R Switch signal with the HDS in the A/T Data List.

   Is the A/T R Switch ON?

   YES—Intermittent failure, the system is OK at this time. ■

   NO—Go to step 3.

3. Turn the ignition switch to LOCK (0).

4. Disconnect the transmission range switch connector.

5. Check for continuity between transmission range switch connector terminal No. 6 and body ground.

TRANSMISSION RANGE SWITCH CONNECTOR

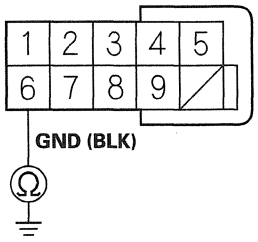

Wire side of female terminals

Is there continuity?

YES—Go to step 6.

NO—Repair an open in the wire between transmission range switch connector terminal No. 6 and ground (G101, G102), or repair poor ground (G101, G102), then go to step 14.

6. Turn the ignition switch to ON (II).

7. Measure the voltage between transmission range switch connector terminals No. 6 and No. 8.

TRANSMISSION RANGE SWITCH CONNECTOR

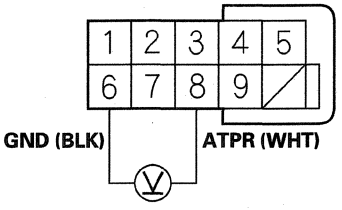

Wire side of female terminals

Is there voltage?

YES—Go to step 8.

NO—Repair an open in the wire between PCM connector terminal D16 and the transmission range switch, then go to step 14.

8. Check for continuity between transmission range switch connector terminals No. 6 and No. 8 while the shift lever is in R, and when the shift lever is shifted to any position other than R.

TRANSMISSION RANGE SWITCH CONNECTOR

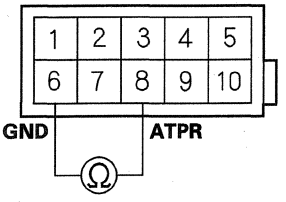

Terminal side of male terminals

Is there continuity while the shift lever is in R, and no continuity when the shift lever is shifted to any position other than R?

YES—Check for poor connections and loose terminals at the transmission range switch and the PCM. If the connections are OK, go to step 9.

NO—Replace the transmission range switch (see page 14-245), then go to step 14.

(cont'd)

DTC Troubleshooting (cont'd)

9. Connect the transmission range switch connector.

10. Update the A/T software in the PCM if it does not have the latest software (see page 11-230), or substitute a known-good PCM (see page 11-7).

11. Test-drive the vehicle in R at speeds below 3 mph (5 km/h) for at least 2 seconds, then increase the speed and test-drive at speeds over 3 mph (5 km/h) for at least 2 seconds. Slow down and stop the wheels.

12. Check for Pending or Confirmed DTCs with the HDS.

    Is DTC P0812 indicated?

    YES—If the PCM was updated, substitute a known-good PCM (see page 11-7), then recheck. If the PCM was substituted, go to step 1.

    NO—Go to step 13.

13. Monitor the OBD STATUS for P0812 in the DTCs MENU with the HDS.

    Does the HDS indicate PASSED?

    YES—If the PCM was updated, troubleshooting is complete. If the PCM was substituted, replace the original PCM (see page 11-232). If any other Pending or Confirmed DTCs were indicated on step 12, go to the indicated DTC's troubleshooting. ■

    NO—Check for poor connections and loose terminals at the transmission range switch and the PCM. If the PCM was updated, substitute a known-good PCM (see page 11-7), then recheck. If the PCM was substituted, go to step 1. If the HDS indicates NOT COMPLETED, return to step 11 and recheck.

14. Connect the transmission range switch connector.

15. Clear the DTC with the HDS.

16. Test-drive the vehicle in R at speeds below 3 mph (5 km/h) for at least 2 seconds, then increase the speed and test-drive at speeds over 3 mph (5 km/h) for at least 2 seconds. Slow down and stop the wheels.

17. Check for Pending or Confirmed DTCs with the HDS.

    Is DTC P0812 indicated?

    YES—Check for poor connections and loose terminals at the transmission range switch and the PCM, then go to step 1.

    NO—Go to step 18.

18. Monitor the OBD STATUS for P0812 in the DTCs MENU with the HDS.

    Does the HDS indicate PASSED?

    YES—Troubleshooting is complete. If any other Pending or Confirmed DTCs were indicated on step 17, go to the indicated DTC's troubleshooting. ■

    NO—Check for poor connections and loose terminals at the transmission range switch and the PCM, then go to step 1. If the HDS indicates NOT COMPLETED, return to step 16 and recheck.

DTC P0842: 2nd Clutch Transmission Fluid Pressure Switch (Short or Stuck ON)

NOTE:
- Before you troubleshoot, record all freeze data and any on-board snapshot, and review General Troubleshooting Information (see page 14-4).
- This code is caused by an electrical circuit problem and cannot be caused by a mechanical problem in the transmission.

1. Clear the DTC with the HDS.
2. Check the 2nd Pressure Switch signal with the HDS in the A/T Data List when not in 2nd gear.

   Is the 2nd Pressure Switch OFF?

   YES—Go to step 3.

   NO—Go to step 6.
3. Start the engine and warm it up to normal operating temperature (the radiator fan comes on).
4. Test-drive the vehicle in 3rd gear in the sequential sportshift mode in S for at least 2 seconds, then slow down to a stop.
5. Monitor the OBD STATUS for P0842 in the DTCs MENU with the HDS.

   Does the HDS indicate FAILED?

   YES—Go to step 6.

   NO—Intermittent failure, the system is OK at this time. Check the OP2SW wire for an intermittent short between the 2nd clutch transmission fluid pressure switch and the PCM. If the HDS indicates NOT COMPLETED, return to step 4 and recheck.
6. Turn the ignition switch to LOCK (0).
7. Disconnect the 2nd clutch transmission fluid pressure switch connector.
8. Turn the ignition switch to ON (II).
9. Check the 2nd Pressure Switch signal with the HDS in the A/T Data List.

   Is the 2nd Pressure Switch OFF?

   YES—Replace the 2nd clutch transmission fluid pressure switch (see page 14-192), then go to step 19.

   NO—Go to step 10.
10. Turn the ignition switch to LOCK (0).
11. Jump the SCS line with the HDS.
12. Disconnect PCM connector C (22P).
13. Check for continuity between PCM connector terminal C11 and body ground.

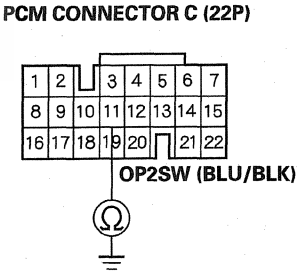

Wire side of female terminals

Is there continuity?

YES—Repair a short in the wire between PCM connector terminal C11 and the 2nd clutch transmission fluid pressure switch, then go to step 19.

NO—Go to step 14.

(cont'd)

DTC Troubleshooting (cont'd)

14. Reconnect all connectors.

15. Update the A/T software in the PCM if it does not have the latest software (see page 11-230), or substitute a known-good PCM (see page 11-7).

16. Test-drive the vehicle in 2nd gear in the sequential sportshift mode in S for at least 2 seconds, then upshift to 4th gear, and drive in 4th gear for at least 2 seconds. Slow down and stop the wheels.

17. Check for Pending or Confirmed DTCs with the HDS.

    Is DTC P0842 indicated?

    YES—If the PCM was updated, substitute a known-good PCM (see page 11-7), then recheck. If the PCM was substituted, go to step 1.

    NO—Go to step 18.

18. Monitor the OBD STATUS for P0842 in the DTCs MENU with the HDS.

    Does the HDS indicate PASSED?

    YES—If the PCM was updated, troubleshooting is complete. If the PCM was substituted, replace the original PCM (see page 11-232). If any other Pending or Confirmed DTCs were indicated on step 17, go to the indicated DTC's troubleshooting. ■

    NO—Check for poor connections and loose terminals at the 2nd clutch transmission fluid pressure switch and the PCM. If the PCM was updated, substitute a known-good PCM (see page 11-7), then recheck. If the PCM was substituted, go to step 1. If the HDS indicates NOT COMPLETED, return to step 16 and recheck.

19. Clear the DTC with the HDS.

20. Test-drive the vehicle in 2nd gear in the sequential sportshift mode in S for at least 2 seconds, then upshift to 4th gear, and drive in 4th gear for at least 2 seconds. Slow down and stop the wheels.

21. Check for Pending or Confirmed DTCs with the HDS.

    Is DTC P0842 indicated?

    YES—Check for poor connections and loose terminals at the 2nd clutch transmission fluid pressure switch and the PCM, then go to step 1.

    NO—Go to step 22.

22. Monitor the OBD STATUS for P0842 in the DTCs MENU with the HDS.

    Does the HDS indicate PASSED?

    YES—Troubleshooting is complete. If any other Pending or Confirmed DTCs were indicated on step 21, go to the indicated DTC's troubleshooting. ■

    NO—Check for poor connections and loose terminals at the 2nd clutch transmission fluid pressure switch and the PCM, then go to step 1. If the HDS indicates NOT COMPLETED, return to step 20 and recheck.

DTC P0843: 2nd Clutch Transmission Fluid Pressure Switch (Open or Stuck OFF)

NOTE: Before you troubleshoot, record all freeze data and any on-board snapshot, and review General Troubleshooting Information (see page 14-4).

1. Clear the DTC with the HDS.
2. Start the engine, and warm it up to normal operating temperature (the radiator fan comes on).
3. Shift the shift lever into S while pressing the brake pedal, upshift to 2nd gear by pressing the paddle shifter + (upshift switch), and verify that the shift command indicates 2nd in the A/T Data List.
4. Check the 2nd Pressure Switch signal with the HDS in the A/T Data List.

   Is the 2nd Pressure Switch ON?

   YES—Go to step 5.

   NO—Go to step 7.

5. Test-drive the vehicle in 2nd gear in the sequential sportshift mode in S for at least 2 seconds, then slow down to a stop.
6. Monitor the OBD STATUS for P0843 in the DTCs MENU with the HDS.

   Does the HDS indicate FAILED?

   YES—Go to step 7.

   NO—Intermittent failure, the system is OK at this time. Check for poor connections and loose terminals at the 2nd clutch transmission fluid pressure switch and the PCM. If the HDS indicates NOT COMPLETED, return to step 5 and recheck.

7. Measure the 2nd clutch pressure (see page 14-174).

   Is the 2nd clutch pressure within the service limits?

   YES—Go to step 8.

   NO—Repair shift valves A and C, and related hydraulic circuit, or replace the transmission, then go to step 18.

(cont'd)

DTC Troubleshooting (cont'd)

8. Turn the ignition switch to LOCK (0).
9. Disconnect the 2nd clutch transmission fluid pressure switch connector.
10. Turn the ignition switch to ON (II).
11. Measure the voltage between the 2nd clutch transmission fluid pressure switch connector terminal and body ground.

2ND CLUTCH TRANSMISSION FLUID PRESSURE SWITCH CONNECTOR

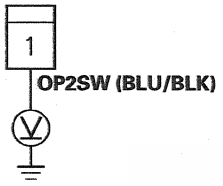

Wire side of female terminals

Is there about 5 V?

YES—Replace the 2nd clutch transmission fluid pressure switch (see page 14-192), then go to step 18.

NO—Go to step 12.

12. Measure the voltage between PCM connector terminal C11 and body ground.

PCM CONNECTOR C (22P)

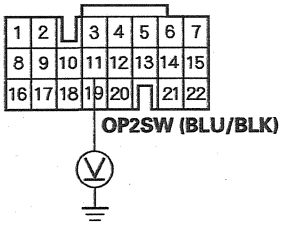

Wire side of female terminals

Is there about 5 V?

YES—Repair an open in the wire between PCM connector terminal C11 and the 2nd clutch transmission fluid pressure switch, then go to step 18.

NO—Go to step 13.

13. Connect the 2nd clutch transmission fluid pressure switch connector.

14. Update the A/T software in the PCM if it does not have the latest software (see page 11-230), or substitute a known-good PCM (see page 11-7).

15. Test-drive the vehicle in 2nd gear in the sequential sportshift mode in S for at least 2 seconds, then upshift to 4th gear, and drive in 4th gear for at least 2 seconds. Slow down and stop the wheels.

16. Check for Pending or Confirmed DTCs with the HDS.

    Is DTC P0843 indicated?

    YES—If the PCM was updated, substitute a known-good PCM (see page 11-7), then recheck. If the PCM was substituted, go to step 1.

    NO—Go to step 17.

17. Monitor the OBD STATUS for P0843 in the DTCs MENU with the HDS.

    Does the HDS indicate PASSED?

    YES—If the PCM was updated, troubleshooting is complete. If the PCM was substituted, replace the original PCM (see page 11-232). If any other Pending or Confirmed DTCs were indicated on step 16, go to the indicated DTC's troubleshooting. ■

    NO—Check for poor connections and loose terminals at the 2nd clutch transmission fluid pressure switch and the PCM. If the PCM was updated, substitute a known-good PCM (see page 11-7), then recheck. If the PCM was substituted, go to step 1. If the HDS indicates NOT COMPLETED, return to step 15 and recheck.

18. Clear the DTC with the HDS.

19. Test-drive the vehicle in 2nd gear in the sequential sportshift mode in S for at least 2 seconds, then upshift to 4th gear, and drive in 4th gear for at least 2 seconds. Slow down and stop the wheels.

20. Check for Pending or Confirmed DTCs with the HDS.

    Is DTC P0843 indicated?

    YES—Check for poor connections and loose terminals at the 2nd clutch transmission fluid pressure switch and the PCM, then go to step 1.

    NO—Go to step 21.

21. Monitor the OBD STATUS for P0843 in the DTCs MENU with the HDS.

    Does the HDS indicate PASSED?

    YES—Troubleshooting is complete. If any other Pending or Confirmed DTCs were indicated on step 20, go to the indicated DTC's troubleshooting. ■

    NO—Check for poor connections and loose terminals at the 2nd clutch transmission fluid pressure switch and the PCM, then go to step 1. If the HDS indicates NOT COMPLETED, return to step 19 and recheck.

DTC Troubleshooting (cont'd)

DTC P0847: 3rd Clutch Transmission Fluid Pressure Switch (Short or Stuck ON)

NOTE:
- Before you troubleshoot, record all freeze data and any on-board snapshot, and review General Troubleshooting Information (see page 14-4).
- This code is caused by an electrical circuit problem and cannot be caused by a mechanical problem in the transmission.

1. Clear the DTC with the HDS.
2. Check the 3rd Pressure Switch signal with the HDS in the A/T Data List when not in 3rd gear.

   Is the 3rd Pressure Switch OFF?

   YES—Go to step 3.

   NO—Go to step 6.
3. Start the engine, and warm it up to normal operating temperature (the radiator fan comes on).
4. Test-drive the vehicle in 3rd gear in the sequential sportshift mode in S for at least 2 seconds, then slow down to a stop.
5. Monitor the OBD STATUS for P0847 in the DTCs MENU with the HDS.

   Does the HDS indicate FAILED?

   YES—Go to step 6.

   NO—Intermittent failure, the system is OK at this time. Check the OP3SW wire for an intermittent short between the 3rd clutch transmission fluid pressure switch and the PCM. If the HDS indicates NOT COMPLETED, return to step 4 and recheck.
6. Turn the ignition switch to LOCK (0).
7. Disconnect the 3rd clutch transmission fluid pressure switch connector.
8. Turn the ignition switch to ON (II).
9. Check the 3rd Pressure Switch signal with the HDS in the A/T Data List.

   Is the 3rd Pressure Switch OFF?

   YES—Replace the 3rd clutch transmission fluid pressure switch (see page 14-193), then go to step 19.

   NO—Go to step 10.
10. Turn the ignition switch to LOCK (0).
11. Jump the SCS line with the HDS.
12. Disconnect PCM connector C (22P).
13. Check for continuity between PCM connector terminal C9 and body ground.

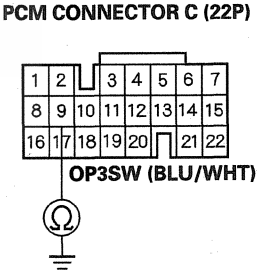

Wire side of female terminals

Is there continuity?

YES—Repair a short in the wire between PCM connector terminal C9 and the 3rd clutch transmission fluid pressure switch, then go to step 19.

NO—Go to step 14.

14. Reconnect all connectors.

15. Update the A/T software in the PCM if it does not have the latest software (see page 11-230), or substitute a known-good PCM (see page 11-7).

16. Test-drive the vehicle in 3rd gear in the sequential sportshift mode in S for at least 2 seconds, then upshift to 4th gear, and drive in 4th gear for at least 2 seconds. Slow down and stop the wheels.

17. Check for Pending or Confirmed DTCs with the HDS.

    Is DTC P0847 indicated?

    YES—If the PCM was updated, substitute a known-good PCM (see page 11-7), then recheck. If the PCM was substituted, go to step 1.

    NO—Go to step 18.

18. Monitor the OBD STATUS for P0847 in the DTCs MENU with the HDS.

    Does the HDS indicate PASSED?

    YES—If the PCM was updated, troubleshooting is complete. If the PCM was substituted, replace the original PCM (see page 11-232). If any other Pending or Confirmed DTCs were indicated on step 17, go to the indicated DTC's troubleshooting. ■

    NO—Check for poor connections and loose terminals at the 3rd clutch transmission fluid pressure switch and the PCM. If the PCM was updated, substitute a known-good PCM (see page 11-7), then recheck. If the PCM was substituted, go to step 1. If the HDS indicates NOT COMPLETED, return to step 16 and recheck.

19. Clear the DTC with the HDS.

20. Test-drive the vehicle in 3rd gear in the sequential sportshift mode in S for at least 2 seconds, then upshift to 4th gear, and drive in 4th gear for at least 2 seconds. Slow down and stop the wheels.

21. Check for Pending or Confirmed DTCs with the HDS.

    Is DTC P0847 indicated?

    YES—Check for poor connections and loose terminals at the 3rd clutch transmission fluid pressure switch and the PCM, then go to step 1.

    NO—Go to step 22.

22. Monitor the OBD STATUS for P0847 in the DTCs MENU with the HDS.

    Does the HDS indicate PASSED?

    YES—Troubleshooting is complete. If any other Pending or Confirmed DTCs were indicated on step 21, go to the indicated DTC's troubleshooting. ■

    NO—Check for poor connections and loose terminals at the 3rd clutch transmission fluid pressure switch and the PCM, then go to step 1. If the HDS indicates NOT COMPLETED, return to step 20 and recheck.

DTC Troubleshooting (cont'd)

DTC P0848: 3rd Clutch Transmission Fluid Pressure Switch (Open or Stuck OFF)

NOTE: Before you troubleshoot, record all freeze data and any on-board snapshot, and review General Troubleshooting Information (see page 14-4).

1. Clear the DTC with the HDS.
2. Start the engine, and warm it up to normal operating temperature (the radiator fan comes on).
3. Test-drive the vehicle in 3rd gear in the sequential sportshift mode in S, and verify with the HDS in the A/T Data List that the Shift Command indicates 3rd.
4. Check the 3rd Pressure Switch signal with the HDS in the A/T Data List.

   Is the 3rd Pressure Switch ON?

   YES—Go to step 5.

   NO—Go to step 7.

5. Test-drive the vehicle in 3rd gear in the sequential sportshift mode in S for at least 2 seconds, then slow down to a stop.
6. Monitor the OBD STATUS for P0848 in the DTCs MENU with the HDS.

   Does the HDS indicate FAILED?

   YES—Go to step 7.

   NO—Intermittent failure, the system is OK at this time. Check for poor connections or loose terminals at the 3rd clutch transmission fluid pressure switch and the PCM. If the HDS indicates NOT COMPLETED, return to step 5 and recheck.

7. Measure the 3rd clutch pressure (see page 14-174).

   Is the 3rd clutch pressure within the service limits?

   YES—Go to step 8.

   NO—Repair shift valves A and B, and related hydraulic circuit, or replace the transmission, then go to step 18.

8. Turn the ignition switch to LOCK (0).

9. Disconnect the 3rd clutch transmission fluid pressure switch connector.

10. Turn the ignition switch to ON (II).

11. Measure the voltage between the 3rd clutch transmission fluid pressure switch connector terminal and body ground.

3RD CLUTCH TRANSMISSION FLUID PRESSURE SWITCH CONNECTOR

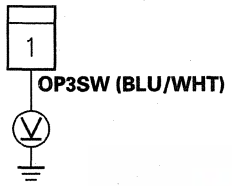

Wire side of female terminals

Is there about 5 V?

YES—Replace the 3rd clutch transmission fluid pressure switch (see page 14-193), then go to step 18.

NO—Go to step 12.

12. Measure the voltage between PCM connector terminal C9 and body ground.

PCM CONNECTOR C (22P)

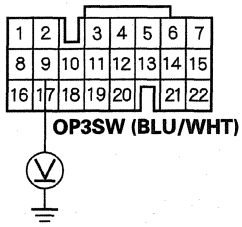

Wire side of female terminals

Is there about 5 V?

YES—Repair an open in the wire between PCM connector terminal C9 and the 3rd clutch transmission fluid pressure switch, then go to step 18.

NO—Go to step 13.

(cont'd)

DTC Troubleshooting (cont'd)

13. Connect the 3rd clutch transmission fluid pressure switch connector.

14. Update the A/T software in the PCM if it does not have the latest software (see page 11-230), or substitute a known-good PCM (see page 11-7).

15. Test-drive the vehicle in 3rd gear in the sequential sportshift mode in S for at least 2 seconds, then upshift to 4th gear, and drive in 4th gear for at least 2 seconds. Slow down and stop the wheels.

16. Check for Pending or Confirmed DTCs with the HDS.

    Is DTC P0848 indicated?

    YES—If the PCM was updated, substitute a known-good PCM (see page 11-7), then recheck. If the PCM was substituted, go to step 1.

    NO—Go to step 17.

17. Monitor the OBD STATUS for P0848 in the DTCs MENU with the HDS.

    Does the HDS indicate PASSED?

    YES—If the PCM was updated, troubleshooting is complete. If the PCM was substituted, replace the original PCM (see page 11-232). If any other Pending or Confirmed DTCs were indicated on step 16, go to the indicated DTC's troubleshooting. ■

    NO—Check for poor connections and loose terminals at the 3rd clutch transmission fluid pressure switch and the PCM. If the PCM was updated, substitute a known-good PCM (see page 11-7), then recheck. If the PCM was substituted, go to step 1. If the HDS indicates NOT COMPLETED, return to step 15 and recheck.

18. Clear the DTC with the HDS.

19. Test-drive the vehicle in 3rd gear in the sequential sportshift mode in S for at least 2 seconds, then upshift to 4th gear, and drive in 4th gear for at least 2 seconds. Slow down and stop the wheels.

20. Check for Pending or Confirmed DTCs with the HDS.

    Is DTC P0848 indicated?

    YES—Check for poor connections and loose terminals at the 3rd clutch transmission fluid pressure switch and the PCM, then go to step 1.

    NO—Go to step 21.

21. Monitor the OBD STATUS for P0848 in the DTCs MENU with the HDS.

    Does the HDS indicate PASSED?

    YES—Troubleshooting is complete. If any other Pending or Confirmed DTCs were indicated on step 20, go to the indicated DTC's troubleshooting. ■

    NO—Check for poor connections and loose terminals at the 3rd clutch transmission fluid pressure switch and the PCM, then go to step 1. If the HDS indicates NOT COMPLETED, return to step 19 and recheck.

DTC P0872: 4th Clutch Transmission Fluid Pressure Switch (Short or Stuck ON)

NOTE:
- Before you troubleshoot, record all freeze data and any on-board snapshot, and review General Troubleshooting Information (see page 14-4).
- This code is caused by an electrical circuit problem and cannot be caused by a mechanical problem in the transmission.

1. Clear the DTC with the HDS.
2. Check the 4th Pressure Switch signal with the HDS in the A/T Data List when not in 4th gear.

   Is the 4th Pressure Switch OFF?

   YES—Go to step 3.

   NO—Go to step 6.
3. Start the engine, and warm it up to normal operating temperature (the radiator fan comes on).
4. Test-drive the vehicle in 5th gear in the sequential sportshift mode in S for at least 2 seconds, then slow down to a stop.
5. Monitor the OBD STATUS for P0872 in the DTCs MENU with the HDS.

   Does the HDS indicate FAILED?

   YES—Go to step 6.

   NO—Intermittent failure, the system is OK at this time. Check the OP4SW wire for an intermittent short between the 4th clutch transmission fluid pressure switch and the PCM. If the HDS indicates NOT COMPLETED, return to step 4 and recheck.
6. Turn the ignition switch to LOCK (0).
7. Disconnect the 4th clutch transmission fluid pressure switch connector.
8. Turn the ignition switch to ON (II).
9. Check the 4th Pressure Switch signal with the HDS in the A/T Data List.

   Is the 4th Pressure Switch OFF?

   YES—Replace the 4th clutch transmission fluid pressure switch (see page 14-193), then go to step 19.

   NO—Go to step 10.
10. Turn the ignition switch to LOCK (0).
11. Jump the SCS line with the HDS.
12. Disconnect PCM connector C (22P).
13. Check for continuity between PCM connector terminal C20 and body ground.

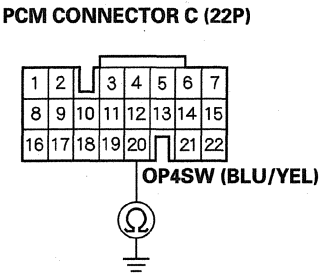

Wire side of female terminals

Is there continuity?

YES—Repair a short in the wire between PCM connector terminal C20 and the 4th clutch transmission fluid pressure switch, then go to step 19.

NO—Go to step 14.

(cont'd)

DTC Troubleshooting (cont'd)

14. Reconnect all connectors.

15. Update the A/T software in the PCM if it does not have the latest software (see page 11-230), or substitute a known-good PCM (see page 11-7).

16. Test-drive the vehicle in 4th gear in the sequential sportshift mode in S for at least 2 seconds, then upshift to 5th gear, and drive in 5th gear for at least 2 seconds. Slow down and stop the wheels.

17. Check for Pending or Confirmed DTCs with the HDS.

    Is DTC P0872 indicated?

    YES—If the PCM was updated, substitute a known-good PCM (see page 11-7), then recheck. If the PCM was substituted, go to step 1.

    NO—Go to step 18.

18. Monitor the OBD STATUS for P0872 in the DTCs MENU with the HDS.

    Does the HDS indicate PASSED?

    YES—If the PCM was updated, troubleshooting is complete. If the PCM was substituted, replace the original PCM (see page 11-232). If any other Pending or Confirmed DTCs were indicated on step 17, go to the indicated DTC's troubleshooting. ■

    NO—Check for poor connections and loose terminals at the 4th clutch transmission fluid pressure switch and the PCM. If the PCM was updated, substitute a known-good PCM (see page 11-7), then recheck. If the PCM was substituted, go to step 1. If the HDS indicates NOT COMPLETED, return to step 16 and recheck.

19. Clear the DTC with the HDS.

20. Test-drive the vehicle in 4th gear in the sequential sportshift mode in S for at least 2 seconds, then upshift to 5th gear, and drive in 5th gear for at least 2 seconds. Slow down and stop the wheels.

21. Check for Pending or Confirmed DTCs with the HDS.

    Is DTC P0872 indicated?

    YES—Check for poor connections and loose terminals at the 4th clutch transmission fluid pressure switch and the PCM, then go to step 1.

    NO—Go to step 22.

22. Monitor the OBD STATUS for P0872 in the DTCs MENU with the HDS.

    Does the HDS indicate PASSED?

    YES—Troubleshooting is complete. If any other Pending or Confirmed DTCs were indicated on step 21, go to the indicated DTC's troubleshooting. ■

    NO—Check for poor connections and loose terminals at the 4th clutch transmission fluid pressure switch and the PCM, then go to step 1. If the HDS indicates NOT COMPLETED, return to step 20 and recheck.

DTC P0873: 4th Clutch Transmission Fluid Pressure Switch (Open or Stuck OFF)

NOTE: Before you troubleshoot, record all freeze data and any on-board snapshot, and review General Troubleshooting Information (see page 14-4).

1. Clear the DTC with the HDS.
2. Start the engine, and warm it up to normal operating temperature (the radiator fan comes on).
3. Test-drive the vehicle in 4th gear in the sequential sportshift mode in S, and verify with the HDS in the A/T Data List that the Shift Command indicates 4th.
4. Check the 4th Pressure Switch signal with the HDS in the A/T Data List.

   Is the 4th Pressure Switch ON?

   YES—Go to step 5.

   NO—Go to step 7.

5. Test-drive the vehicle in 4th gear in the sequential sportshift mode in S for at least 2 seconds, then slow down to a stop.
6. Monitor the OBD STATUS for P0873 in the DTCs MENU with the HDS.

   Does the HDS indicate FAILED?

   YES—Go to step 7.

   NO—Intermittent failure, the system is OK at this time. Check for poor connections or loose terminals at the 4th clutch transmission fluid pressure switch and the PCM. If the HDS indicates NOT COMPLETED, return to step 5 and recheck.

7. Measure the 4th clutch pressure (see page 14-174).

   Is the 4th clutch pressure within the service limits?

   YES—Go to step 8.

   NO—Repair shift valves B, C, and E, and related hydraulic circuit, or replace the transmission, then go to step 18.

(cont'd)

DTC Troubleshooting (cont'd)

8. Turn the ignition switch to LOCK (0).
9. Disconnect the 4th clutch transmission fluid pressure switch connector.
10. Turn the ignition switch to ON (II).
11. Measure the voltage between the 4th clutch transmission fluid pressure switch connector terminal and body ground.

4TH CLUTCH TRANSMISSION FLUID PRESSURE SWITCH CONNECTOR

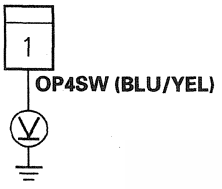

Wire side of female terminals

Is there about 5 V?

YES—Replace the 4th clutch transmission fluid pressure switch (see page 14-193), then go to step 19.

NO—Go to step 12.

12. Measure the voltage between PCM connector terminal C20 and body ground.

PCM CONNECTOR C (22P)

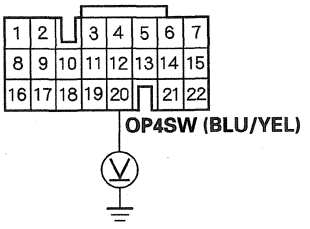

Wire side of female terminals

Is there about 5 V?

YES—Repair an open in the wire between PCM connector terminal C20 and the 4th clutch transmission fluid pressure switch, then go to step 18.

NO—Go to step 13.

13. Connect the 4th clutch transmission fluid pressure switch connector.

14. Update the A/T software in the PCM if it does not have the latest software (see page 11-230), or substitute a known-good PCM (see page 11-7).

15. Test-drive the vehicle in 4th gear in the sequential sportshift mode in S for at least 2 seconds, then upshift to 5th gear, and drive in 5th gear for at least 2 seconds. Slow down and stop the wheels.

16. Check for Pending or Confirmed DTCs with the HDS.

    Is DTC P0873 indicated?

    YES—If the PCM was updated, substitute a known-good PCM (see page 11-7), then recheck. If the PCM was substituted, go to step 1.

    NO—Go to step 17.

17. Monitor the OBD STATUS for P0873 in the DTCs MENU with the HDS.

    Does the HDS indicate PASSED?

    YES—If the PCM was updated, troubleshooting is complete. If the PCM was substituted, replace the original PCM (see page 11-232). If any other Pending or Confirmed DTCs were indicated on step 16, go to the indicated DTC's troubleshooting. ■

    NO—Check for poor connections and loose terminals at the 4th clutch transmission fluid pressure switch and the PCM. If the PCM was updated, substitute a known-good PCM (see page 11-7), then recheck. If the PCM was substituted, go to step 1. If the HDS indicates NOT COMPLETED, return to step 15 and recheck.

18. Clear the DTC with the HDS.

19. Test-drive the vehicle in 4th gear in the sequential sportshift mode in S for at least 2 seconds, then upshift to 5th gear, and drive in 5th gear for at least 2 seconds. Slow down and stop the wheels.

20. Check for Pending or Confirmed DTCs with the HDS.

    Is DTC P0873 indicated?

    YES—Check for poor connections and loose terminals at the 4th clutch transmission fluid pressure switch and the PCM, then go to step 1.

    NO—Go to step 21.

21. Monitor the OBD STATUS for P0873 in the DTCs MENU with the HDS.

    Does the HDS indicate PASSED?

    YES—Troubleshooting is complete. If any other Pending or Confirmed DTCs were indicated on step 20, go to the indicated DTC's troubleshooting. ■

    NO—Check for poor connections and loose terminals at the 4th clutch transmission fluid pressure switch and the PCM, then go to step 1. If the HDS indicates NOT COMPLETED, return to step 19 and recheck.

DTC Troubleshooting (cont'd)

DTC P0962: A/T Clutch Pressure Control Solenoid Valve A (Open)

NOTE:
- Before you troubleshoot, record all freeze data and any on-board snapshot, and review General Troubleshooting Information (see page 14-4).
- This code is caused by an electrical circuit problem and cannot be caused by a mechanical problem in the transmission.

1. Clear the DTC with the HDS.
2. Check if DTC P0962 records.

   Is DTC P0962 indicated?

   YES—Go to step 6.

   NO—Go to step 3.
3. Select Clutch Pressure Control (Linear) Solenoid A in the Miscellaneous Test Menu, and test A/T clutch pressure control solenoid valve A with the HDS.

   Does the HDS indicate NORMAL?

   YES—Go to step 4.

   NO—Go to step 6.
4. In the Clutch Pressure Control Solenoid Valve Control menu, select A/T Clutch Pressure Control Solenoid Valve A at 1.0 A.
5. Monitor the OBD STATUS for P0962 in the DTCs MENU with the HDS.

   Does the HDS indicate FAILED?

   YES—Go to step 6.

   NO—Intermittent failure, the system is OK at this time. Check for poor connections or loose terminals at A/T clutch pressure control solenoid valve A and the PCM. If the HDS indicates NOT COMPLETED, return to step 3 and recheck. ■
6. Turn the ignition switch to LOCK (0).
7. Disconnect the A/T clutch pressure control solenoid valve A connector.
8. Measure the resistance between A/T clutch pressure control solenoid valve A connector terminals No. 1 and No. 2.

A/T CLUTCH PRESSURE CONTROL SOLENOID VALVE A CONNECTOR

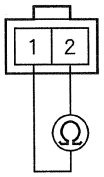

Terminal side of male terminals

Is there 3— 10 Ω ?

YES—Go to step 9.

NO—Replace A/T clutch pressure control solenoid valve A (see page 14-185), then go to step 21.

9. Check for continuity between A/T clutch pressure control solenoid valve A connector terminal No. 2 and body ground.

A/T CLUTCH PRESSURE CONTROL SOLENOID VALVE A CONNECTOR

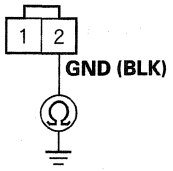

Wire side of female terminals

Is there continuity?

YES—Go to step 10.

NO—Repair an open in the wire between A/T clutch pressure control solenoid valve A and ground (G101, G102), or repair poor ground (G101, G102), then go to step 21.

10. Jump the SCS line with the HDS.

11. Disconnect PCM connector C (22P).

12. Check for continuity between PCM connector terminal C7 and A/T clutch pressure control solenoid valve A connector terminal No. 1.

PCM CONNECTOR C (22P)

A/T CLUTCH PRESSURE CONTROL SOLENOID VALVE A CONNECTOR

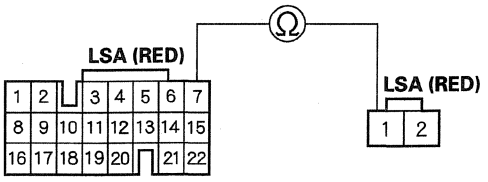

Wire side of female terminals

Is there continuity?

YES—Go to step 13.

NO—Repair an open in the wire between PCM connector terminal C7 and A/T clutch pressure control solenoid valve A, then go to step 21.

(cont'd)

DTC Troubleshooting (cont'd)

13. Check for continuity between A/T clutch pressure control solenoid valve A connector terminal No. 1 and body ground.

A/T CLUTCH PRESSURE CONTROL SOLENOID VALVE A CONNECTOR

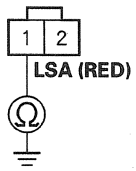

Wire side of female terminals

Is there continuity?

YES—Repair a short in the wire between PCM connector terminal C7 and A/T clutch pressure control solenoid valve A, then go to step 21.

NO—Go to step 14.

14. Turn the ignition switch to ON (II).

15. Measure the voltage between PCM connector terminal A10 and body ground.

PCM CONNECTOR A (31P)

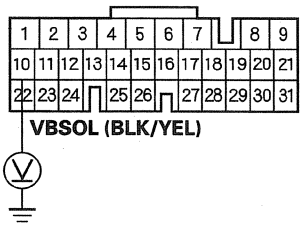

Wire side of female terminals

Is there battery voltage?

YES—Turn the ignition switch to LOCK (0), then go to step 16.

NO—Check for blown No. 18 fuse in the driver's under-dash fuse/relay box. If the fuse is OK, repair an open in the wire between PCM connector terminal A10 and the driver's under-dash fuse/relay box, then go to step 21.

16. Reconnect all connectors.

17. Update the A/T software in the PCM if it does not have the latest software (see page 11-230), or substitute a known-good PCM (see page 11-7).

18. Start the engine, and wait for at least 1 second.

19. Check for Pending or Confirmed DTCs with the HDS.

Is DTC P0962 indicated?

YES—If the PCM was updated, substitute a known-good PCM (see page 11-7), then recheck. If the PCM was substituted, go to step 1.

NO—Go to step 20.

20. Monitor the OBD STATUS for P0962 in the DTCs MENU with the HDS.

Does the HDS indicate PASSED?

YES—If the PCM was updated, troubleshooting is complete. If the PCM was substituted, replace the original PCM (see page 11-232). If any other Pending or Confirmed DTCs were indicated on step 19, go to the indicated DTC's troubleshooting. ■

NO—Check for poor connections and loose terminals at A/T clutch pressure control solenoid valve A and the PCM. If the PCM was updated, substitute a known-good PCM (see page 11-7), then recheck. If the PCM was substituted, go to step 1. If the HDS indicates NOT COMPLETED, return to step 18 and recheck.

21. Clear the DTC with the HDS.

22. Start the engine, and wait for at least 1 second.

23. Check for Pending or Confirmed DTCs with the HDS.

    Is DTC P0962 indicated?

    YES—Check for poor connections and loose terminals at A/T clutch pressure control solenoid valve A and the PCM, then go to step 1.

    NO—Go to step 24.

24. Monitor the OBD STATUS for P0962 in the DTCs MENU with the HDS.

    Does the HDS indicate PASSED?

    YES—Troubleshooting is complete. If any other Pending or Confirmed DTCs were indicated on step 23, go to the indicated DTC's troubleshooting. ■

    NO—Check for poor connections and loose terminals at A/T clutch pressure control solenoid valve A and the PCM, then go to step 1. If the HDS indicates NOT COMPLETED, return to step 22 and recheck.

DTC P0963: A/T Clutch Pressure Control Solenoid Valve A (Short)

NOTE:
- Before you troubleshoot, record all freeze data and any on-board snapshot, and review General Troubleshooting Information (see page 14-4).
- This code is caused by an electrical circuit problem and cannot be caused by a mechanical problem in the transmission.

1. Clear the DTC with the HDS.

2. Check if DTC P0963 records.

   Is DTC P0963 indicated?

   YES—Go to step 6.

   NO—Go to step 3.

3. Select Clutch Pressure Control (Linear) Solenoid A in the Miscellaneous Test Menu, and test A/T clutch pressure control solenoid valve A with the HDS.

   Does the HDS indicate NORMAL?

   YES—Go to step 4.

   NO—Go to step 6.

4. In the Clutch Pressure Control Solenoid Valve Control menu, select A/T Clutch Pressure Control Solenoid Valve A at 0.2 A.

5. Monitor the OBD STATUS for P0963 in the DTCs MENU with the HDS.

   Does the HDS indicate FAILED?

   YES—Go to step 6.

   NO—Intermittent failure, the system is OK at this time. Check for poor connections or loose terminals at A/T clutch pressure control solenoid valve A and the PCM. If the HDS indicates NOT COMPLETED, return to step 3 and recheck.

6. Turn the ignition switch to LOCK (0).

7. Disconnect the A/T clutch pressure control solenoid valve A connector.

(cont'd)

DTC Troubleshooting (cont'd)

8. Measure the resistance between A/T clutch pressure control solenoid valve A connector terminals No. 1 and No. 2.

A/T CLUTCH PRESSURE CONTROL SOLENOID VALVE A CONNECTOR

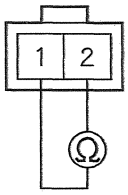

Terminal side of male terminals

Is there 3— 10 Ω ?

YES—Go to step 9.

NO—Replace A/T clutch pressure control solenoid valve A (see page 14-185), then go to step 15.

9. Check for continuity between A/T clutch pressure control solenoid valve A connector terminal No. 2 and body ground.

A/T CLUTCH PRESSURE CONTROL SOLENOID VALVE A CONNECTOR

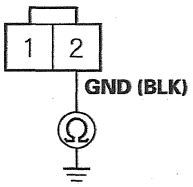

Wire side of female terminals

Is there continuity?

YES—Go to step 10.

NO—Repair an open in the wire between A/T clutch pressure control solenoid valve A and ground (G101, G102), or repair poor ground (G101, G102), then go to step 15.

10. Connect the A/T clutch pressure control solenoid valve A connector.

11. Update the A/T software in the PCM if it does not have the latest software (see page 11-230), or substitute a known-good PCM (see page 11-7).

12. Start the engine, and wait for at least 1 second.

13. Check for Pending or Confirmed DTCs with the HDS.

Is DTC P0963 indicated?

YES—If the PCM was updated, substitute a known-good PCM (see page 11-7), then recheck. If the PCM was substituted, go to step 1.

NO—Go to step 14.

14. Monitor the OBD STATUS for P0963 in the DTCs MENU with the HDS.

Does the HDS indicate PASSED?

YES—If the PCM was updated, troubleshooting is complete. If the PCM was substituted, replace the original PCM (see page 11-232). If any other Pending or Confirmed DTCs were indicated on step 13, go to the indicated DTC's troubleshooting. ■

NO—Check for poor connections and loose terminals at A/T clutch pressure control solenoid valve A and the PCM. If the PCM was updated, substitute a known-good PCM (see page 11-7), then recheck. If the PCM was substituted, go to step 1. If the HDS indicates NOT COMPLETED, return to step 12 and recheck.

15. Clear the DTC with the HDS.

16. Start the engine, and wait for at least 1 second.

17. Check for Pending or Confirmed DTCs with the HDS.

    Is DTC P0963 indicated?

    YES—Check for poor connections and loose terminals at A/T clutch pressure control solenoid valve A and the PCM, then go to step 1.

    NO—Go to step 18.

18. Monitor the OBD STATUS for P0963 in the DTCs MENU with the HDS.

    Does the HDS indicate PASSED?

    YES—Troubleshooting is complete. If any other Pending or Confirmed DTCs were indicated on step 17, go to the indicated DTC's troubleshooting. ■

    NO—Check for poor connections and loose terminals at A/T clutch pressure control solenoid valve A and the PCM, then go to step 1. If the HDS indicates NOT COMPLETED, return to step 16 and recheck.

DTC P0966: A/T Clutch Pressure Control Solenoid Valve B (Open)

NOTE:
- Before you troubleshoot, record all freeze data and any on-board snapshot, and review General Troubleshooting Information (see page 14-4).
- This code is caused by an electrical circuit problem and cannot be caused by a mechanical problem in the transmission.

1. Clear the DTC with the HDS.

2. Check if DTC P0966 records.

   Is DTC P0966 indicated?

   YES—Go to step 6.

   NO—Go to step 3.

3. Select Clutch Pressure Control (Linear) Solenoid B in the Miscellaneous Test Menu, and test A/T clutch pressure control solenoid valve B with the HDS.

   Does the HDS indicate NORMAL?

   YES—Go to step 4.

   NO—Go to step 6.

4. In the Clutch Pressure Control Solenoid Valve Control menu, select A/T Clutch Pressure Control Solenoid Valve B at 1.0 A.

5. Monitor the OBD STATUS for P0966 in the DTCs MENU with the HDS.

   Does the HDS indicate FAILED?

   YES—Go to step 6.

   NO—Intermittent failure, the system is OK at this time. Check for poor connections or loose terminals at A/T clutch pressure control solenoid valve B and the PCM. If the HDS indicates NOT COMPLETED, return to step 3 and recheck. ■

(cont'd)

DTC Troubleshooting (cont'd)

6. Turn the ignition switch to LOCK (0).
7. Disconnect the A/T clutch pressure control solenoid valve B connector.
8. Measure the resistance between A/T clutch pressure control solenoid valve B connector terminals No. 1 and No. 2.

A/T CLUTCH PRESSURE CONTROL SOLENOID VALVE B CONNECTOR

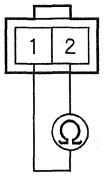

Terminal side of male terminals

Is there 3— 10 Ω ?

YES—Go to step 9.

NO—Replace A/T clutch pressure control solenoid valve B (see page 14-185), then go to step 21.

9. Check for continuity between A/T clutch pressure control solenoid valve B connector terminal No. 2 and body ground.

A/T CLUTCH PRESSURE CONTROL SOLENOID VALVE B CONNECTOR

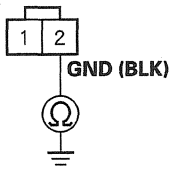

Wire side of female terminals

Is there continuity?

YES—Go to step 10.

NO—Repair an open in the wire between A/T clutch pressure control solenoid valve B and ground (G101, G102), or repair poor ground (G101, G102), then go to step 21.

10. Jump the SCS line with the HDS.

11. Disconnect PCM connector C (22P).

12. Check for continuity between PCM connector terminal C15 and A/T clutch pressure control solenoid valve B connector terminal No. 1.

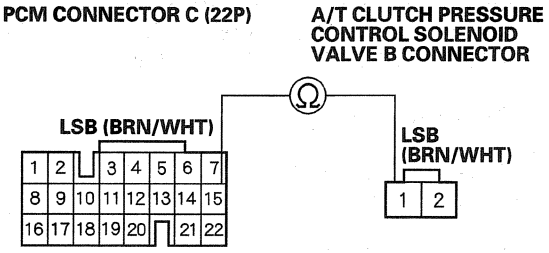

Wire side of female terminals

Is there continuity?

YES—Go to step 13.

NO—Repair an open in the wire between PCM connector terminal C15 and A/T clutch pressure control solenoid valve B, then go to step 21.

13. Check for continuity between A/T clutch pressure control solenoid valve B connector terminal No. 1 and body ground.

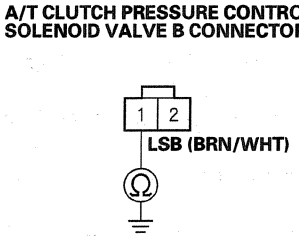

Wire side of female terminals

Is there continuity?

YES—Repair a short in the wire between PCM connector terminal C15 and A/T clutch pressure control solenoid valve B, then go to step 24.

NO—Go to step 14.

14. Turn the ignition switch to ON (II).

15. Measure the voltage between PCM connector terminal A10 and body ground.

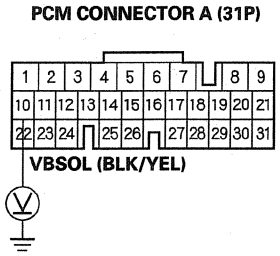

Wire side of female terminals

Is there battery voltage?

YES—Turn the ignition switch to LOCK (0), then go to step 16.

NO—Check for blown No. 18 fuse in the driver's under-dash fuse/relay box. If the fuse is OK, repair an open in the wire between PCM connector terminal A10 and the driver's under-dash fuse/relay box, then go to step 21.

(cont'd)

DTC Troubleshooting (cont'd)

16. Reconnect all connectors.

17. Update the A/T software in the PCM if it does not have the latest software (see page 11-230), or substitute a known-good PCM (see page 11-7).

18. Start the engine, and wait for at least 1 second.

19. Check for Pending or Confirmed DTCs with the HDS.

    Is DTC P0966 indicated?

    YES—If the PCM was updated, substitute a known-good PCM (see page 11-7), then recheck. If the PCM was substituted, go to step 1.

    NO—Go to step 20.

20. Monitor the OBD STATUS for P0966 in the DTCs MENU with the HDS.

    Does the HDS indicate PASSED?

    YES—If the PCM was updated, troubleshooting is complete. If the PCM was substituted, replace the original PCM (see page 11-232). If any other Pending or Confirmed DTCs were indicated on step 19, go to the indicated DTC's troubleshooting. ■

    NO—Check for poor connections and loose terminals at A/T clutch pressure control solenoid valve B and the PCM. If the PCM was updated, substitute a known-good PCM (see page 11-7), then recheck. If the PCM was substituted, go to step 1. If the HDS indicates NOT COMPLETED, return to step 18 and recheck.

21. Clear the DTC with the HDS.

22. Start the engine, and wait for at least 1 second.

23. Check for Pending or Confirmed DTCs with the HDS.

    Is DTC P0966 indicated?

    YES—Check for poor connections and loose terminals at A/T clutch pressure control solenoid valve B and the PCM, then go to step 1.

    NO—Go to step 24.

24. Monitor the OBD STATUS for P0966 in the DTCs MENU with the HDS.

    Does the HDS indicate PASSED?

    YES—Troubleshooting is complete. If any other Pending or Confirmed DTCs were indicated on step 23, go to the indicated DTC's troubleshooting. ■

    NO—Check for poor connections and loose terminals at A/T clutch pressure control solenoid valve B and the PCM, then go to step 1. If the HDS indicates NOT COMPLETED, return to step 22 and recheck.

DTC P0967: A/T Clutch Pressure Control Solenoid Valve B (Short)

NOTE:
- Before you troubleshoot, record all freeze data and any on-board snapshot, and review General Troubleshooting Information (see page 14-4).
- This code is caused by an electrical circuit problem and cannot be caused by a mechanical problem in the transmission.

1. Clear the DTC with the HDS.
2. Check if DTC P0967 records.

   Is DTC P0967 indicated?

   YES—Go to step 6.

   NO—Go to step 3.
3. Select Clutch Pressure Control (Linear) Solenoid B in the Miscellaneous Test Menu, and test A/T clutch pressure control solenoid valve B with the HDS.

   Does the HDS indicate NORMAL?

   YES—Go to step 4.

   NO—Go to step 6.
4. In the Clutch Pressure Control Solenoid Valve Control menu, select A/T Clutch Pressure Control Solenoid Valve B at 0.2 A.
5. Monitor the OBD STATUS for P0967 in the DTCs MENU with the HDS.

   Does the HDS indicate FAILED?

   YES—Go to step 6.

   NO—Intermittent failure, the system is OK at this time. Check for poor connections or loose terminals at A/T clutch pressure control solenoid valve B and the PCM. If the HDS indicates NOT COMPLETED, return to step 3 and recheck.
6. Turn the ignition switch to LOCK (0).
7. Disconnect the A/T clutch pressure control solenoid valve B connector.
8. Measure the resistance between A/T clutch pressure control solenoid valve B connector terminals No. 1 and No. 2.

A/T CLUTCH PRESSURE CONTROL SOLENOID VALVE B CONNECTOR

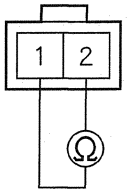

Terminal side of male terminals

Is there 3— 10 Ω ?

YES—Go to step 9.

NO—Replace the A/T clutch pressure control solenoid valve B (see page 14-185), then go to step 15.

9. Check for continuity between A/T clutch pressure control solenoid valve B connector terminal No. 2 and body ground.

A/T CLUTCH PRESSURE CONTROL SOLENOID VALVE B CONNECTOR

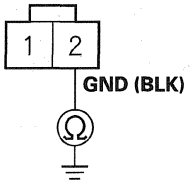

Wire side of female terminals

Is there continuity?

YES—Go to step 10.

NO—Repair an open in the wire between A/T clutch pressure control solenoid valve B and ground (G101, G102), or repair poor ground (G101, G102), then go to step 15.

(cont'd)

DTC Troubleshooting (cont'd)

10. Connect the A/T clutch pressure control solenoid valve B connector.

11. Update the A/T software in the PCM if it does not have the latest software (see page 11-230), or substitute a known-good PCM (see page 11-7).

12. Start the engine, and wait for at least 1 second.

13. Check for Pending or Confirmed DTCs with the HDS.

    Is DTC P0967 indicated?

    YES—If the PCM was updated, substitute a known-good PCM (see page 11-7), then recheck. If the PCM was substituted, go to step 1.

    NO—Go to step 14.

14. Monitor the OBD STATUS for P0967 in the DTCs MENU with the HDS.

    Does the HDS indicate PASSED?

    YES—If the PCM was updated, troubleshooting is complete. If the PCM was substituted, replace the original PCM (see page 11-232). If any other Pending or Confirmed DTCs were indicated on step 13, go to the indicated DTC's troubleshooting. ■

    NO—Check for poor connections and loose terminals at A/T clutch pressure control solenoid valve B and the PCM. If the PCM was updated, substitute a known-good PCM (see page 11-7), then recheck. If the PCM was substituted, go to step 1. If the HDS indicates NOT COMPLETED, return to step 12 and recheck.

15. Clear the DTC with the HDS.

16. Start the engine, and wait for at least 1 second.

17. Check for Pending or Confirmed DTCs with the HDS.

    Is DTC P0967 indicated?

    YES—Check for poor connections and loose terminals at A/T clutch pressure control solenoid valve B and the PCM, then go to step 1.

    NO—Go to step 18.

18. Monitor the OBD STATUS for P0967 in the DTCs MENU with the HDS.

    Does the HDS indicate PASSED?

    YES—Troubleshooting is complete. If any other Pending or Confirmed DTCs were indicated on step 17, go to the indicated DTC's troubleshooting. ■

    NO—Check for poor connections and loose terminals at A/T clutch pressure control solenoid valve B and the PCM, then go to step 1. If the HDS indicates NOT COMPLETED, return to step 16 and recheck.

DTC P0970: A/T Clutch Pressure Control Solenoid Valve C (Open)

NOTE:
- Before you troubleshoot, record all freeze data and any on-board snapshot, and review General Troubleshooting Information (see page 14-4).
- This code is caused by an electrical circuit problem and cannot be caused by a mechanical problem in the transmission.

1. Clear the DTC with the HDS.
2. Check if DTC P0970 records.

   Is DTC P0970 indicated?

   YES—Go to step 6.

   NO—Go to step 3.
3. Select Clutch Pressure Control (Linear) Solenoid C in the Miscellaneous Test Menu, and test A/T clutch pressure control solenoid valve C with the HDS.

   Does the HDS indicate NORMAL?

   YES—Go to step 4.

   NO—Go to step 6.
4. In the Clutch Pressure Control Solenoid Valve Control menu, select A/T Clutch Pressure Control Solenoid Valve C at 1.0 A.
5. Monitor the OBD STATUS for P0970 in the DTCs MENU with the HDS.

   Does the HDS indicate FAILED?

   YES—Go to step 6.

   NO—Intermittent failure, the system is OK at this time. Check for poor connections or loose terminals at A/T clutch pressure control solenoid valve C and the PCM. If the HDS indicates NOT COMPLETED, return to step 3 and recheck. ■
6. Turn the ignition switch to LOCK (0).
7. Disconnect the A/T clutch pressure control solenoid valve C connector.
8. Measure the resistance between A/T clutch pressure control solenoid valve C connector terminals No. 1 and No. 2.

A/T CLUTCH PRESSURE CONTROL SOLENOID VALVE C CONNECTOR

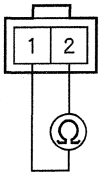

Terminal side of male terminals

Is there 3— 10 Ω ?

YES—Go to step 9.

NO—Replace A/T clutch pressure control solenoid valve C (see page 14-190), then go to step 21.

(cont'd)

DTC Troubleshooting (cont'd)

9. Check for continuity between A/T clutch pressure control solenoid valve C connector terminal No. 2 and body ground.

A/T CLUTCH PRESSURE CONTROL SOLENOID VALVE C CONNECTOR

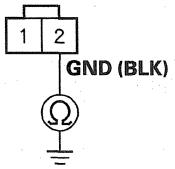

Wire side of female terminals

Is there continuity?

YES—Go to step 10.

NO—Repair an open in the wire between A/T clutch pressure control solenoid valve C and ground (G101, G102), or repair poor ground (G101, G102), then go to step 21.

10. Jump the SCS line with the HDS.

11. Disconnect PCM connector C (22P).

12. Check for continuity between PCM connector terminal C22 and A/T clutch pressure control solenoid valve C connector terminal No. 1.

PCM CONNECTOR C (22P)

A/T CLUTCH PRESSURE CONTROL SOLENOID VALVE C CONNECTOR

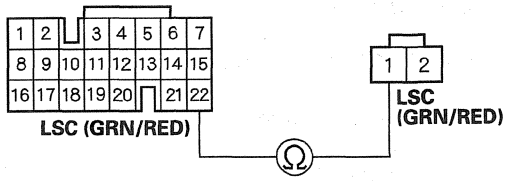

Wire side of female terminals

Is there continuity?

YES—Go to step 13.

NO—Repair an open in the wire between PCM connector terminal C22 and A/T clutch pressure control solenoid valve C, then go to step 21.

13. Check for continuity between A/T clutch pressure control solenoid valve C connector terminal No. 1 and body ground.

A/T CLUTCH PRESSURE CONTROL SOLENOID VALVE C CONNECTOR

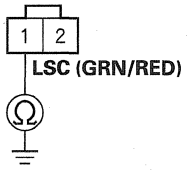

Wire side of female terminals

Is there continuity?

YES—Repair a short in the wire between PCM connector terminal C22 and A/T clutch pressure control solenoid valve C, then go to step 24.

NO—Go to step 14.

14. Turn the ignition switch to ON (II).

15. Measure the voltage between PCM connector terminal A10 and body ground.

PCM CONNECTOR A (31P)

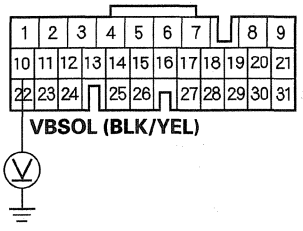

Wire side of female terminals

Is there battery voltage?

YES—Turn the ignition switch to LOCK (0), then go to step 16.

NO—Check for blown No. 18 fuse in the driver's under-dash fuse/relay box. If the fuse is OK, repair an open in the wire between PCM connector terminal A10 and the driver's under-dash fuse/relay box, then go to step 21.

16. Reconnect all connectors.

17. Update the A/T software in the PCM if it does not have the latest software (see page 11-230), or substitute a known-good PCM (see page 11-7).

18. Start the engine, and wait for at least 1 second.

19. Check for Pending or Confirmed DTCs with the HDS.

Is DTC P0970 indicated?

YES—If the PCM was updated, substitute a known-good PCM (see page 11-7), then recheck. If the PCM was substituted, go to step 1.

NO—Go to step 20.

20. Monitor the OBD STATUS for P0970 in the DTCs MENU with the HDS.

Does the HDS indicate PASSED?

YES—If the PCM was updated, troubleshooting is complete. If the PCM was substituted, replace the original PCM (see page 11-232). If any other Pending or Confirmed DTCs were indicated on step 19, go to the indicated DTC's troubleshooting. ■

NO—Check for poor connections and loose terminals at A/T clutch pressure control solenoid valve C and the PCM. If the PCM was updated, substitute a known-good PCM (see page 11-7), then recheck. If the PCM was substituted, go to step 1. If the HDS indicates NOT COMPLETED, return to step 18 and recheck.

(cont'd)

DTC Troubleshooting (cont'd)

21. Clear the DTC with the HDS.

22. Start the engine, and wait for at least 1 second.

23. Check for Pending or Confirmed DTCs with the HDS.

    Is DTC P0970 indicated?

    YES—Check for poor connections and loose terminals at A/T clutch pressure control solenoid valve C and the PCM, then go to step 1.

    NO—Go to step 24.

24. Monitor the OBD STATUS for P0970 in the DTCs MENU with the HDS.

    Does the HDS indicate PASSED?

    YES—Troubleshooting is complete. If any other Pending or Confirmed DTCs were indicated on step 23, go to the indicated DTC's troubleshooting. ■

    NO—Check for poor connections and loose terminals at A/T clutch pressure control solenoid valve C and the PCM, then go to step 1. If the HDS indicates NOT COMPLETED, return to step 22 and recheck.

DTC P0971: A/T Clutch Pressure Control Solenoid Valve C (Short)

NOTE:
- Before you troubleshoot, record all freeze data and any on-board snapshot, and review General Troubleshooting Information (see page 14-4).
- This code is caused by an electrical circuit problem and cannot be caused by a mechanical problem in the transmission.

1. Clear the DTC with the HDS.

2. Check if DTC P0971 records.

   Is DTC P0971 indicated?

   YES—Go to step 6.

   NO—Go to step 3.

3. Select Clutch Pressure Control (Linear) Solenoid C in the Miscellaneous Test Menu, and test A/T clutch pressure control solenoid valve C with the HDS.

   Does the HDS indicate NORMAL?

   YES—Go to step 4.

   NO—Go to step 6.

4. In the Clutch Pressure Control Solenoid Valve Control menu, select A/T Clutch Pressure Control Solenoid Valve C at 0.2 A.

5. Monitor the OBD STATUS for P0971 in the DTCs MENU with the HDS.

   Does the HDS indicate FAILED?

   YES—Go to step 6.

   NO—Intermittent failure, the system is OK at this time. Check for poor connections or loose terminals at A/T clutch pressure control solenoid valve C and the PCM. If the HDS indicates NOT COMPLETED, return to step 3 and recheck.

6. Turn the ignition switch to LOCK (0).

7. Disconnect the A/T clutch pressure control solenoid valve C connector.

8. Measure the resistance between A/T clutch pressure control solenoid valve C connector terminals No. 1 and No. 2.

A/T CLUTCH PRESSURE CONTROL SOLENOID VALVE C CONNECTOR

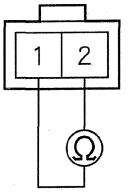

Terminal side of male terminals

Is there 3— 10 Ω ?

YES—Go to step 9.

NO—Replace the A/T clutch pressure control solenoid valve C (see page 14-190), then go to step 15.

9. Check for continuity between A/T clutch pressure control solenoid valve C connector terminal No. 2 and body ground.

A/T CLUTCH PRESSURE CONTROL SOLENOID VALVE C CONNECTOR

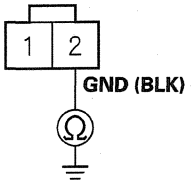

Wire side of female terminals

Is there continuity?

YES—Go to step 10.

NO—Repair an open in the wire between A/T clutch pressure control solenoid valve C and ground (G101, G102), or repair poor ground (G101, G102), then go to step 15.

10. Connect the A/T clutch pressure control solenoid valve C connector.

11. Update the A/T software in the PCM if it does not have the latest software (see page 11-230), or substitute a known-good PCM (see page 11-7).

12. Start the engine, and wait for at least 1 second.

13. Check for Pending or Confirmed DTCs with the HDS.

Is DTC P0971 indicated?

YES—If the PCM was updated, substitute a known-good PCM (see page 11-7), then recheck. If the PCM was substituted, go to step 1.

NO—Go to step 14.

14. Monitor the OBD STATUS for P0971 in the DTCs MENU with the HDS.

Does the HDS indicate PASSED?

YES—If the PCM was updated, troubleshooting is complete. If the PCM was substituted, replace the original PCM (see page 11-232). If any other Pending or Confirmed DTCs were indicated on step 13, go to the indicated DTC's troubleshooting. ■

NO—Check for poor connections and loose terminals at A/T clutch pressure control solenoid valve C and the PCM. If the PCM was updated, substitute a known-good PCM (see page 11-7), then recheck. If the PCM was substituted, go to step 1. If the HDS indicates NOT COMPLETED, return to step 12 and recheck.

(cont'd)

DTC Troubleshooting (cont'd)

15. Clear the DTC with the HDS.

16. Start the engine, and wait for at least 1 second.

17. Check for Pending or Confirmed DTCs with the HDS.

    Is DTC P0971 indicated?

    YES—Check for poor connections and loose terminals at A/T clutch pressure control solenoid valve C and the PCM, then go to step 1.

    NO—Go to step 18.

18. Monitor the OBD STATUS for P0971 in the DTCs MENU with the HDS.

    Does the HDS indicate PASSED?

    YES—Troubleshooting is complete. If any other Pending or Confirmed DTCs were indicated on step 17, go to the indicated DTC's troubleshooting. ■

    NO—Check for poor connections and loose terminals at A/T clutch pressure control solenoid valve C and the PCM, then go to step 1. If the HDS indicates NOT COMPLETED, return to step 16 and recheck.

DTC P0973: Shift Solenoid Valve A (Short)

NOTE:
- Before you troubleshoot, record all freeze data and any on-board snapshot, and review General Troubleshooting Information (see page 14-4).
- This code is caused by an electrical circuit problem and cannot be caused by a mechanical problem in the transmission.

1. Clear the DTC with the HDS.

2. Start the engine. With the brake pedal pressed, shift to R, and wait for at least 1 second.

3. Check if DTC P0973 records.

   Is DTC P0973 indicated?

   YES—Go to step 7.

   NO—Go to step 4.

4. Select Shift Solenoid A in Miscellaneous Test Menu, and test shift solenoid valve A with the HDS.

   Is a clicking sound heard?

   YES—Go to step 5.

   NO—Go to step 7.

5. Start the engine. With the brake pedal pressed, shift to R, and wait for at least 1 second.

6. Monitor the OBD STATUS for P0973 in the DTCs MENU with the HDS.

   Does the HDS indicate FAILED?

   YES—Go to step 7.

   NO—Intermittent failure, the system is OK at this time. Check the SHA wire for an intermittent short between shift solenoid valve A and the PCM. If the HDS indicates NOT COMPLETED, return to step 4 and recheck.

7. Turn the ignition switch to LOCK (0).
8. Jump the SCS line with the HDS.
9. Disconnect PCM connector C (22P).
10. Measure the resistance between PCM connector terminal C1 and body ground.

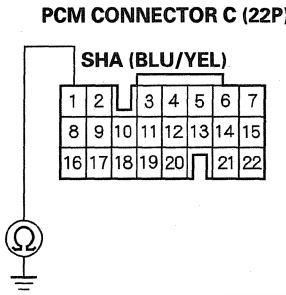

Wire side of female terminals

Is there less than 12 Ω ?

YES—Go to step 11.

NO—Go to step 16.

11. Disconnect the shift solenoid harness connector at the transmission housing.
12. Check for continuity between PCM connector terminal C1 and body ground.

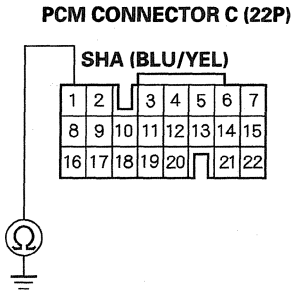

Wire side of female terminals

Is there continuity?

YES—Repair a short in the wire between PCM connector terminal C1 and the shift solenoid harness connector, then go to step 21.

NO—Go to step 13.

13. Inspect shift solenoid valve A (see page 14-178).

Is shift solenoid valve A OK?

YES—Go to step 14.

NO—Replace shift solenoid valve A or the shift solenoid harness (see page 14-178), then go to step 22.

14. Turn the ignition switch to ON (II).

(cont'd)

DTC Troubleshooting (cont'd)

15. Measure the voltage between PCM connector terminal D12 and body ground.

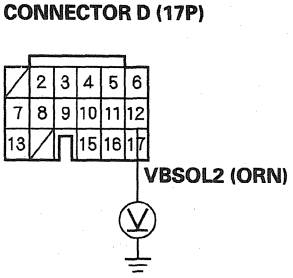

Wire side of female terminals

Is there battery voltage?

YES—Go to step 21.

NO—Check for blown No. 20 fuse in the driver's under-dash fuse/relay box. If the fuse is OK, repair an open in the wire between PCM connector terminal D12 and the driver's under-dash fuse/relay box, then go to step 21.

16. Reconnect all connectors.

17. Update the A/T software in the PCM if it does not have the latest software (see page 11-230), or substitute a known-good PCM (see page 11-7).

18. Start the engine in P. With the brake pedal pressed, shift to R, and wait for at least 1 second, then move the shift lever back into P.

19. Check for Pending or Confirmed DTCs with the HDS.

Is DTC P0973 indicated?

YES—If the PCM was updated, substitute a known-good PCM (see page 11-7), then recheck. If the PCM was substituted, go to step 1.

NO—Go to step 20.

20. Monitor the OBD STATUS for P0973 in the DTCs MENU with the HDS.

Does the HDS indicate PASSED?

YES—If the PCM was updated, troubleshooting is complete. If the PCM was substituted, replace the original PCM (see page 11-232). If any other Pending or Confirmed DTCs were indicated on step 19, go to the indicated DTC's troubleshooting. ■

NO—Check for poor connections and loose terminals at shift solenoid valve A and the PCM. If the PCM was updated, substitute a known-good PCM (see page 11-7), then recheck. If the PCM was substituted, go to step 1. If the HDS indicates NOT COMPLETED, return to step 18 and recheck.

21. Clear the DTC with the HDS.

22. Start the engine in P. With the brake pedal pressed, shift to R, and wait for at least 1 second, then move the shift lever back into P.

23. Check for Pending or Confirmed DTCs with the HDS.

    Is DTC P0973 indicated?

    YES—Check for poor connections and loose terminals at shift solenoid valve A and the PCM, then go to step 1.

    NO—Go to step 24.

24. Monitor the OBD STATUS for P0973 in the DTCs MENU with the HDS.

    Does the HDS indicate PASSED?

    YES—Troubleshooting is complete. If any other Pending or Confirmed DTCs were indicated on step 23, go to the indicated DTC's troubleshooting. ■

    NO—Check for poor connections and loose terminals at shift solenoid valve A and the PCM, then go to step 1. If the HDS indicates NOT COMPLETED, return to step 22 and recheck.

DTC P0974: Shift Solenoid Valve A (Open)

NOTE:
- Before you troubleshoot, record all freeze data and any on-board snapshot, and review General Troubleshooting Information (see page 14-4).
- This code is caused by an electrical circuit problem and cannot be caused by a mechanical problem in the transmission.

1. Clear the DTC with the HDS.

2. Start the engine in P, and wait for at least 1 second.

3. Check if DTC P0974 records.

   Is DTC P0974 indicated?

   YES—Go to step 7.

   NO—Go to step 4.

4. Select Shift Solenoid A in Miscellaneous Test Menu, and test shift solenoid valve A with the HDS.

   Is a clicking sound heard?

   YES—Go to step 5.

   NO—Go to step 7.

5. Start the engine in P, and wait for at least 1 second.

6. Monitor the OBD STATUS for P0974 in the DTCs MENU with the HDS.

   Does the HDS indicate FAILED?

   YES—Go to step 7.

   NO—Intermittent failure, the system is OK at this time. Check for poor connections or loose terminals at shift solenoid valve A and the PCM. If the HDS indicates NOT COMPLETED, return to step 4 and recheck.

(cont'd)

DTC Troubleshooting (cont'd)

7. Turn the ignition switch to LOCK (0).
8. Jump the SCS line with the HDS.
9. Disconnect PCM connector C (22P).
10. Measure the resistance between PCM connector terminal C1 and body ground.

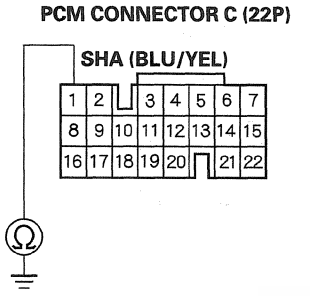

Wire side of female terminals

Is there 12—25 Ω ?

YES—Go to step 15.

NO—Go to step 11.

11. Disconnect the shift solenoid harness connector.
12. Check for continuity between PCM connector terminal C1 and shift solenoid harness connector terminal No. 3.

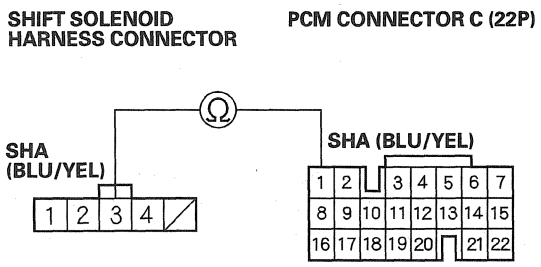

Wire side of female terminals

Is there continuity?

YES—Go to step 13.

NO—Repair an open in the wire between PCM connector terminal C1 and the shift solenoid harness connector, then go to step 20.

13. Remove the shift solenoid harness connector (see page 14-178).
14. Check for continuity between shift solenoid harness connector terminal No. 3 and the shift solenoid valve A connector terminal.

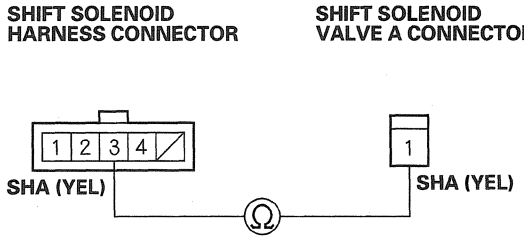

Terminal side of male terminals

Wire side of female terminals

Is there continuity?

YES—Replace shift solenoid valve A (see page 14-178), then go to step 20.

NO—Replace the shift solenoid harness (see page 14-178), then go to step 20.

15. Connect PCM connectors A (31P), B (24P), and C (22P).

16. Update the A/T software in the PCM if it does not have the latest software (see page 11-230), or substitute a known-good PCM (see page 11-7).

17. Start the engine in P. With the brake pedal pressed, shift to R, and stop for at least 1 second. Then move the shift lever back into P, and wait for at least 1 second.

18. Check for Pending or Confirmed DTCs with the HDS.

    Is DTC P0974 indicated?

    YES—If the PCM was updated, substitute a known-good PCM (see page 11-7), then recheck. If the PCM was substituted, go to step 1.

    NO—Go to step 19.

19. Monitor the OBD STATUS for P0974 in the DTCs MENU with the HDS.

    Does the HDS indicate PASSED?

    YES—If the PCM was updated, troubleshooting is complete. If the PCM was substituted, replace the original PCM (see page 11-232). If any other Pending or Confirmed DTCs were indicated on step 18, go to the indicated DTC's troubleshooting. ■

    NO—Check for poor connections and loose terminals at shift solenoid valve A and the PCM. If the PCM was updated, substitute a known-good PCM (see page 11-7), then recheck. If the PCM was substituted, go to step 1. If the HDS indicates NOT COMPLETED, return to step 17 and recheck.

20. Clear the DTC with the HDS.

21. Start the engine in P. With the brake pedal pressed, shift to R, and stop for at least 1 second. Then move the shift lever back into P, and wait for at least 1 second.

22. Check for Pending or Confirmed DTCs with the HDS.

    Is DTC P0974 indicated?

    YES—Check for poor connections and loose terminals at shift solenoid valve A and the PCM, then go to step 1.

    NO—Go to step 23.

23. Monitor the OBD STATUS for P0974 in the DTCs MENU with the HDS.

    Does the HDS indicate PASSED?

    YES—Troubleshooting is complete. If any other Pending or Confirmed DTCs were indicated on step 22, go to the indicated DTC's troubleshooting. ■

    NO—Check for poor connections and loose terminals at shift solenoid valve A and the PCM, then go to step 1. If the HDS indicates NOT COMPLETED, return to step 21 and recheck.

DTC Troubleshooting (cont'd)

DTC P0976: Shift Solenoid Valve B (Short)

NOTE:
- Before you troubleshoot, record all freeze data and any on-board snapshot, and review General Troubleshooting Information (see page 14-4).
- This code is caused by an electrical circuit problem and cannot be caused by a mechanical problem in the transmission.

1. Clear the DTC with the HDS.
2. Start the engine in P, and wait for at least 1 second.
3. Check if DTC P0976 records.

   Is DTC P0976 indicated?

   YES—Go to step 7.

   NO—Go to step 4.
4. Select Shift Solenoid B in Miscellaneous Test Menu, and test shift solenoid valve B with the HDS.

   Is a clicking sound heard?

   YES—Go to step 5.

   NO—Go to step 7.
5. Start the engine in P, and wait for at least 1 second.
6. Monitor the OBD STATUS for P0976 in the DTCs MENU with the HDS.

   Does the HDS indicate FAILED?

   YES—Go to step 7.

   NO—Intermittent failure, the system is OK at this time. Check the SHB wire for an intermittent short between shift solenoid valve B and the PCM. If the HDS indicates NOT COMPLETED, return to step 4 and recheck.
7. Turn the ignition switch to LOCK (0).
8. Jump the SCS line with the HDS.
9. Disconnect PCM connector C (22P).
10. Measure the resistance between PCM connector terminal C8 and body ground.

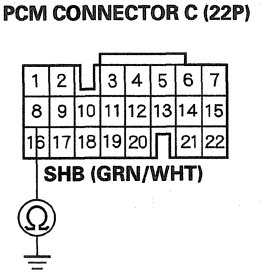

Wire side of female terminals

Is there less than 12 Ω ?

YES—Go to step 11.

NO—Go to step 14.

11. Disconnect the shift solenoid harness connector at the transmission housing.

12. Check for continuity between PCM connector terminal C8 and body ground.

PCM CONNECTOR C (22P)

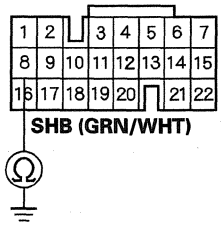

Wire side of female terminals

Is there continuity?

YES—Repair a short in the wire between PCM connector terminal C8 and the shift solenoid harness connector, then go to step 19.

NO—Go to step 13.

13. Inspect shift solenoid valve B (see page 14-178).

Is shift solenoid valve B OK?

YES—Go to step 14.

NO—Replace shift solenoid valve B or the shift solenoid harness (see page 14-178), then go to step 19.

14. Reconnect all connectors.

15. Update the A/T software in the PCM if it does not have the latest software (see page 11-230), or substitute a known-good PCM (see page 11-7).

16. Start the engine in P, wait for at least 1 second, then test-drive the vehicle in D. Run the vehicle in 3rd or 4th gear at least 1 second, then slow down to a stop.

17. Check for Pending or Confirmed DTCs with the HDS.

Is DTC P0976 indicated?

YES—If the PCM was updated, substitute a known-good PCM (see page 11-7), then recheck. If the PCM was substituted, go to step 1.

NO—Go to step 18.

18. Monitor the OBD STATUS for P0976 in the DTCs MENU with the HDS.

Does the HDS indicate PASSED?

YES—If the PCM was updated, troubleshooting is complete. If the PCM was substituted, replace the original PCM (see page 11-232). If any other Pending or Confirmed DTCs were indicated on step 17, go to the indicated DTC's troubleshooting. ■

NO—Check for poor connections and loose terminals at shift solenoid valve B and the PCM. If the PCM was updated, substitute a known-good PCM (see page 11-7), then recheck. If the PCM was substituted, go to step 1. If the HDS indicates NOT COMPLETED, return to step 16 and recheck.

(cont'd)

DTC Troubleshooting (cont'd)

19. Clear the DTC with the HDS.

20. Start the engine in P, wait for at least 1 second, then test-drive the vehicle in D. Run the vehicle in 3rd or 4th gear at least 1 second, then slow down to a stop.

21. Check for Pending or Confirmed DTCs with the HDS.

    Is DTC P0976 indicated?

    YES—Check for poor connections and loose terminals at shift solenoid valve B and the PCM, then go to step 1.

    NO—Go to step 22.

22. Monitor the OBD STATUS for P0976 in the DTCs MENU with the HDS.

    Does the HDS indicate PASSED?

    YES—Troubleshooting is complete. If any other Pending or Confirmed DTCs were indicated on step 21, go to the indicated DTC's troubleshooting. ■

    NO—Check for poor connections and loose terminals at shift solenoid valve B and the PCM, then go to step 1. If the HDS indicates NOT COMPLETED, return to step 20 and recheck.

DTC P0977: Shift Solenoid Valve B (Open)

NOTE:
- Before you troubleshoot, record all freeze data and any on-board snapshot, and review General Troubleshooting Information (see page 14-4).
- This code is caused by an electrical circuit problem and cannot be caused by a mechanical problem in the transmission.

1. Clear the DTC with the HDS.

2. Test-drive the vehicle in 3rd or 4th gear in D for at least 1 second, then slow down to a stop.

3. Check if DTC P0977 records.

   Is DTC P0977 indicated?

   YES—Go to step 7.

   NO—Go to step 4.

4. Select Shift Solenoid B in Miscellaneous Test Menu, and test shift solenoid valve B with the HDS.

   Is a clicking sound heard?

   YES—Go to step 5.

   NO—Go to step 7.

5. Test-drive the vehicle in 3rd or 4th gear in D for at least 1 second, then slow down to a stop.

6. Monitor the OBD STATUS for P0977 in the DTCs MENU with the HDS.

   Does the HDS indicate FAILED?

   YES—Go to step 7.

   NO—Intermittent failure, the system is OK at this time. Check for poor connections or loose terminals at shift solenoid valve B and the PCM. If the HDS indicates NOT COMPLETED, return to step 4 and recheck.

7. Turn the ignition switch to LOCK (0).

8. Jump the SCS line with the HDS.

9. Disconnect PCM connector C (22P).

10. Measure the resistance between PCM connector terminal C8 and body ground.

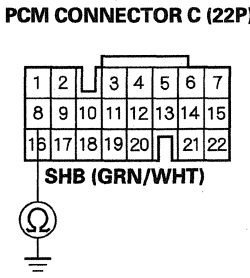

Wire side of female terminals

Is there 12—25 Ω ?

YES—Go to step 15.

NO—Go to step 11.

11. Disconnect the shift solenoid harness connector.

12. Check for continuity between PCM connector terminal C8 and shift solenoid harness connector terminal No. 4.

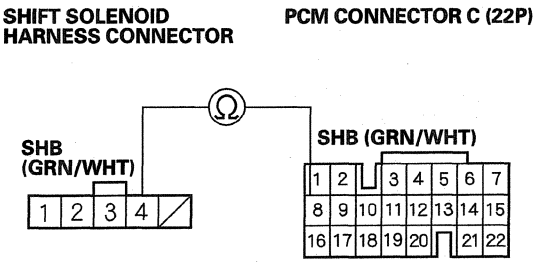

Wire side of female terminals

Is there continuity?

YES—Go to step 13.

NO—Repair an open in the wire between PCM connector terminal C8 and the shift solenoid harness connector, then go to step 20.

13. Remove the shift solenoid harness connector (see page 14-178).

14. Check for continuity between shift solenoid harness connector terminal No. 4 and the shift solenoid valve B connector terminal.

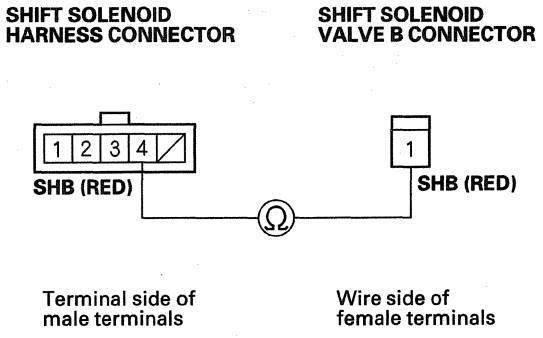

Is there continuity?

YES—Replace shift solenoid valve B (see page 14-178), then go to step 20.

NO—Replace the shift solenoid harness (see page 14-178), then go to step 20.

(cont'd)

DTC Troubleshooting (cont'd)

15. Reconnect all connectors.

16. Update the A/T software in the PCM if it does not have the latest software (see page 11-230), or substitute a known-good PCM (see page 11-7).

17. Start the engine in P, wait for at least 1 second, then test-drive the vehicle in D. Run the vehicle in 3rd or 4th gear at least 1 second, then slow down to a stop.

18. Check for Pending or Confirmed DTCs with the HDS.

    Is DTC P0977 indicated?

    YES—If the PCM was updated, substitute a known-good PCM (see page 11-7), then recheck. If the PCM was substituted, go to step 1.

    NO—Go to step 19.

19. Monitor the OBD STATUS for P0977 in the DTCs MENU with the HDS.

    Does the HDS indicate PASSED?

    YES—If the PCM was updated, troubleshooting is complete. If the PCM was substituted, replace the original PCM (see page 11-232). If any other Pending or Confirmed DTCs were indicated on step 18, go to the indicated DTC's troubleshooting. ■

    NO—Check for poor connections and loose terminals at shift solenoid valve B and the PCM. If the PCM was updated, substitute a known-good PCM (see page 11-7), then recheck. If the PCM was substituted, go to step 1. If the HDS indicates NOT COMPLETED, return to step 17 and recheck.

20. Clear the DTC with the HDS.

21. Start the engine in P, wait for at least 1 second, then test-drive the vehicle in D. Run the vehicle in 3rd or 4th gear at least 1 second, then slow down to a stop.

22. Check for Pending or Confirmed DTCs with the HDS.

    Is DTC P0977 indicated?

    YES—Check for poor connections and loose terminals at shift solenoid valve B and the PCM, then go to step 1.

    NO—Go to step 23.

23. Monitor the OBD STATUS for P0977 in the DTCs MENU with the HDS.

    Does the HDS indicate PASSED?

    YES—Troubleshooting is complete. If any other Pending or Confirmed DTCs were indicated on step 22, go to the indicated DTC's troubleshooting. ■

    NO—Check for poor connections and loose terminals at shift solenoid valve B and the PCM, then go to step 1. If the HDS indicates NOT COMPLETED, return to step 21 and recheck.

DTC P0979: Shift Solenoid Valve C (Short)

NOTE:
- Before you troubleshoot, record all freeze data and any on-board snapshot, and review General Troubleshooting Information (see page 14-4).
- This code is caused by an electrical circuit problem and cannot be caused by a mechanical problem in the transmission.

1. Clear the DTC with the HDS.
2. Start the engine, and run the vehicle in 1st gear in D for at least 1 second.
3. Check if DTC P0979 records.

   Is DTC P0979 indicated?

   YES—Go to step 7.

   NO—Go to step 4.
4. Select Shift Solenoid C in Miscellaneous Test Menu, and test shift solenoid valve C with the HDS.

   Is a clicking sound heard?

   YES—Go to step 5.

   NO—Go to step 7.
5. Start the engine, and run the vehicle in 1st gear in D for at least 1 second.
6. Monitor the OBD STATUS for P0979 in the DTCs MENU with the HDS.

   Does the HDS indicate FAILED?

   YES—Go to step 7.

   NO—Intermittent failure, the system is OK at this time. Check the SHC wire for an intermittent short between shift solenoid valve C and the PCM. If the HDS indicates NOT COMPLETED, return to step 4 and recheck.
7. Turn the ignition switch to LOCK (0).
8. Jump the SCS line with the HDS.
9. Disconnect PCM connector C (22P).
10. Measure the resistance between PCM connector terminal C16 and body ground.

PCM CONNECTOR C (22P)

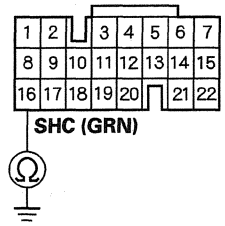

Wire side of female terminals

Is there less than 12 Ω ?

YES—Go to step 11.

NO—Go to step 14.

(cont'd)

DTC Troubleshooting (cont'd)

11. Disconnect shift solenoid harness connector at the transmission housing.

12. Check for continuity between PCM connector terminal C16 and body ground.

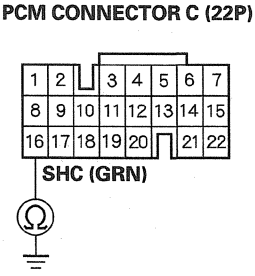

Wire side of female terminals

Is there continuity?

YES—Repair an short in the wire between PCM connector terminal C16 and the shift solenoid harness connector, then go to step 19.

NO—Go to step 13.

13. Inspect shift solenoid valve C (see page 14-178).

Is shift solenoid valve C OK?

YES—Go to step 14.

NO—Replace shift solenoid valve C or the shift solenoid harness (see page 14-178), then go to step 19.

14. Reconnect all connectors.

15. Update the A/T software in the PCM if it does not have the latest software (see page 11-230), or substitute a known-good PCM (see page 11-7).

16. Start the engine in P, wait for at least 1 second, then test-drive the vehicle in D. Run the vehicle in 1st gear at least 1 second, then slow down to a stop.

17. Check for Pending or Confirmed DTCs with the HDS.

Is DTC P0979 indicated?

YES—If the PCM was updated, substitute a known-good PCM (see page 11-7), then recheck. If the PCM was substituted, go to step 1.

NO—Go to step 18.

18. Monitor the OBD STATUS for P0979 in the DTCs MENU with the HDS.

Does the HDS indicate PASSED?

YES—If the PCM was updated, troubleshooting is complete. If the PCM was substituted, replace the original PCM (see page 11-232). If any other Pending or Confirmed DTCs were indicated on step 17, go to the indicated DTC's troubleshooting. ■

NO—Check for poor connections and loose terminals at shift solenoid valve C and the PCM. If the PCM was updated, substitute a known-good PCM (see page 11-7), then recheck. If the PCM was substituted, go to step 1. If the HDS indicates NOT COMPLETED, return to step 16 and recheck.

19. Clear the DTC with the HDS.

20. Start the engine in P, wait for at least 1 second, then test-drive the vehicle in D. Run the vehicle in 1st gear at least 1 second, then slow down to a stop.

21. Check for Pending or Confirmed DTCs with the HDS.

    Is DTC P0979 indicated?

    YES—Check for poor connections and loose terminals at shift solenoid valve C and the PCM, then go to step 1.

    NO—Go to step 22.

22. Monitor the OBD STATUS for P0979 in the DTCs MENU with the HDS.

    Does the HDS indicate PASSED?

    YES—Troubleshooting is complete. If any other Pending or Confirmed DTCs were indicated on step 21, go to the indicated DTC's troubleshooting. ■

    NO—Check for poor connections and loose terminals at shift solenoid valve C and the PCM, then go to step 1. If the HDS indicates NOT COMPLETED, return to step 20 and recheck.

DTC P0980: Shift Solenoid Valve C (Open)

NOTE:
- Before you troubleshoot, record all freeze data and any on-board snapshot, and review General Troubleshooting Information (see page 14-4).
- This code is caused by an electrical circuit problem and cannot be caused by a mechanical problem in the transmission.

1. Clear the DTC with the HDS.

2. Start the engine in P, and wait for at least 1 second.

3. Check if DTC P0980 records.

   Is DTC P0980 indicated?

   YES—Go to step 7.

   NO—Go to step 4.

4. Select Shift Solenoid C in Miscellaneous Test Menu, and test shift solenoid valve C with the HDS.

   Is a clicking sound heard?

   YES—Go to step 5.

   NO—Go to step 7.

5. Start the engine in P, and wait for at least 1 second.

6. Monitor the OBD STATUS for P0980 in the DTCs MENU with the HDS.

   Does the HDS indicate FAILED?

   YES—Go to step 7.

   NO—Intermittent failure, the system is OK at this time. Check for poor connections or loose terminals at shift solenoid valve C and the PCM. If the HDS indicates NOT COMPLETED, return to step 4 and recheck.

(cont'd)

DTC Troubleshooting (cont'd)

7. Turn the ignition switch to LOCK (0).
8. Jump the SCS line with the HDS.
9. Disconnect PCM connector C (22P).
10. Measure the resistance between PCM connector terminal C16 and body ground.

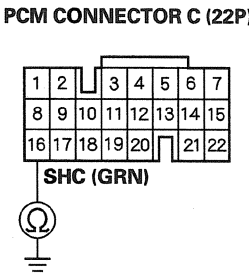

Wire side of female terminals

Is there 12—25 Ω ?

YES—Go to step 15.

NO—Go to step 11.

11. Disconnect the shift solenoid harness connector.
12. Check for continuity between PCM connector terminal C16 and shift solenoid harness connector terminal No. 2.

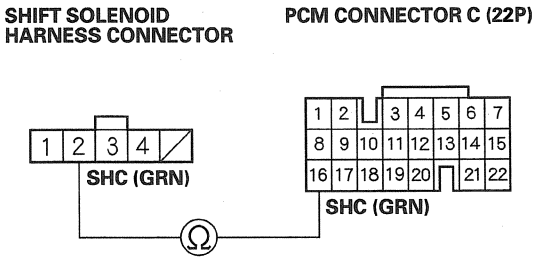

Wire side of female terminals

Is there continuity?

YES—Go to step 13.

NO—Repair an open in the wire between PCM connector terminal C16 and the shift solenoid harness connector, then go to step 20.

13. Remove the shift solenoid harness connector (see page 14-178).
14. Check for continuity between shift solenoid harness connector terminal No. 2 and the shift solenoid valve C connector terminal.

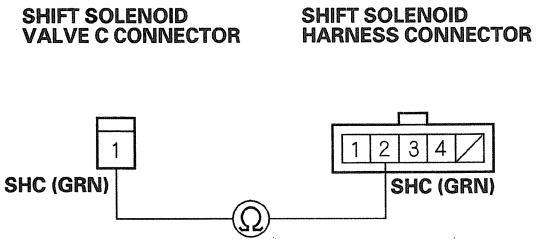

Wire side of female terminals

Terminal side of male terminals

Is there continuity?

YES—Replace shift solenoid valve C (see page 14-178), then go to step 20.

NO—Replace the shift solenoid harness (see page 14-178), then go to step 20.

15. Reconnect all connectors.

16. Update the A/T software in the PCM if it does not have the latest software (see page 11-230), or substitute a known-good PCM (see page 11-7).

17. Start the engine in P, wait for at least 1 second, then test-drive the vehicle in D. Run the vehicle in 1st gear at least 1 second, then slow down to a stop.

18. Check for Pending or Confirmed DTCs with the HDS.

    Is DTC P0980 indicated?

    YES—If the PCM was updated, substitute a known-good PCM (see page 11-7), then recheck. If the PCM was substituted, go to step 1.

    NO—Go to step 19.

19. Monitor the OBD STATUS for P0980 in the DTCs MENU with the HDS.

    Does the HDS indicate PASSED?

    YES—If the PCM was updated, troubleshooting is complete. If the PCM was substituted, replace the original PCM (see page 11-232). If any other Pending or Confirmed DTCs were indicated on step 18, go to the indicated DTC's troubleshooting. ■

    NO—Check for poor connections and loose terminals at shift solenoid valve C and the PCM. If the PCM was updated, substitute a known-good PCM (see page 11-7), then recheck. If the PCM was substituted, go to step 1. If the HDS indicates NOT COMPLETED, return to step 17 and recheck.

20. Clear the DTC with the HDS.

21. Start the engine in P, wait for at least 1 second, then test-drive the vehicle in D. Run the vehicle in 1st gear at least 1 second, then slow down to a stop.

22. Check for Pending or Confirmed DTCs with the HDS.

    Is DTC P0980 indicated?

    YES—Check for poor connections and loose terminals at shift solenoid valve C and the PCM, then go to step 1.

    NO—Go to step 23.

23. Monitor the OBD STATUS for P0980 in the DTCs MENU with the HDS.

    Does the HDS indicate PASSED?

    YES—Troubleshooting is complete. If any other Pending or Confirmed DTCs were indicated on step 22, go to the indicated DTC's troubleshooting. ■

    NO—Check for poor connections and loose terminals at shift solenoid valve C and the PCM, then go to step 1. If the HDS indicates NOT COMPLETED, return to step 21 and recheck.

DTC Troubleshooting (cont'd)

DTC P0982: Shift Solenoid Valve D (Short)

NOTE:
- Before you troubleshoot, record all freeze data and any on-board snapshot, and review General Troubleshooting Information (see page 14-4).
- This code is caused by an electrical circuit problem and cannot be caused by a mechanical problem in the transmission.

1. Clear the DTC with the HDS.
2. Start the engine in P, and wait for at least 1 second.
3. Check if DTC P0982 records.

   Is DTC P0982 indicated?

   YES—Go to step 7.

   NO—Go to step 4.
4. Select Shift Solenoid D in Miscellaneous Test Menu, and test shift solenoid valve D with the HDS.

   Is a clicking sound heard?

   YES—Go to step 5.

   NO—Go to step 7.
5. Start the engine in P, and wait for at least 1 second.
6. Monitor the OBD STATUS for P0982 in the DTCs MENU with the HDS.

   Does the HDS indicate FAILED?

   YES—Go to step 7.

   NO—Intermittent failure, the system is OK at this time. Check the SHD wire for an intermittent short between shift solenoid valve D and the PCM. If the HDS indicates NOT COMPLETED, return to step 4 and recheck.
7. Turn the ignition switch to LOCK (0).
8. Jump the SCS line with the HDS.
9. Disconnect PCM connector C (22P).
10. Measure the resistance between PCM connector terminal C2 and body ground.

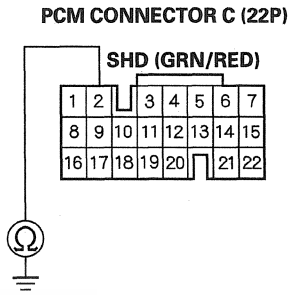

Wire side of female terminals

Is there less than 12 Ω ?

YES—Go to step 11.

NO—Go to step 16.

11. Disconnect shift solenoid harness connector at the transmission housing.

12. Check for continuity between PCM connector terminal C2 and body ground.

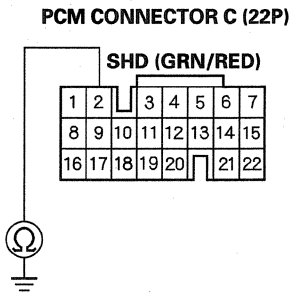

Wire side of female terminals

Is there continuity?

YES—Repair a short in the wire between PCM connector terminal C2 and the shift solenoid harness connector, then go to step 21.

NO—Go to step 13.

13. Inspect shift solenoid valve D and shift solenoid harness (see page 14-178).

Is shift solenoid valve D and shift solenoid harness OK?

YES—Go to step 14.

NO—Replace shift solenoid valve D or the shift solenoid harness (see page 14-178), then go to step 21.

14. Turn the ignition switch to ON (II).

15. Measure the voltage between PCM connector terminal D12 and body ground.

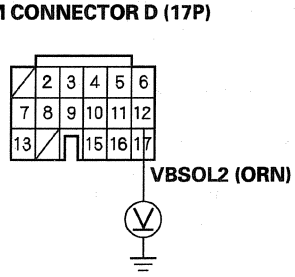

Wire side of female terminals

Is there battery voltage?

YES—Go to step 16.

NO—Check for blown No. 20 fuse in the driver's under-dash fuse/relay box. If the fuse is OK, repair an open in the wire between PCM connector terminal D12 and the driver's under-dash fuse/relay box, then go to step 21.

(cont'd)

DTC Troubleshooting (cont'd)

16. Reconnect all connectors.

17. Update the A/T software in the PCM if it does not have the latest software (see page 11-230), or substitute a known-good PCM (see page 11-7).

18. Start the engine in P, and wait for at least 1 second. With the brake pedal pressed, shift to N, and wait for at least 1 second.

19. Check for Pending or Confirmed DTCs with the HDS.

    Is DTC P0982 indicated?

    YES—If the PCM was updated, substitute a known-good PCM (see page 11-7), then recheck. If the PCM was substituted, go to step 1.

    NO—Go to step 20.

20. Monitor the OBD STATUS for P0982 in the DTCs MENU with the HDS.

    Does the HDS indicate PASSED?

    YES—If the PCM was updated, troubleshooting is complete. If the PCM was substituted, replace the original PCM (see page 11-232). If any other Pending or Confirmed DTCs were indicated on step 19, go to the indicated DTC's troubleshooting. ■

    NO—Check for poor connections and loose terminals at shift solenoid valve D and the PCM. If the PCM was updated, substitute a known-good PCM (see page 11-7), then recheck. If the PCM was substituted, go to step 1. If the HDS indicates NOT COMPLETED, return to step 18 and recheck.

21. Clear the DTC with the HDS.

22. Start the engine in P, and wait for at least 1 second. With the brake pedal pressed, shift to N, and wait for at least 1 second.

23. Check for Pending or Confirmed DTCs with the HDS.

    Is DTC P0982 indicated?

    YES—Check for poor connections and loose terminals at shift solenoid valve D and the PCM, then go to step 1.

    NO—Go to step 24.

24. Monitor the OBD STATUS for P0982 in the DTCs MENU with the HDS.

    Does the HDS indicate PASSED?

    YES—Troubleshooting is complete. If any other Pending or Confirmed DTCs were indicated on step 23, go to the indicated DTC's troubleshooting. ■

    NO—Check for poor connections and loose terminals at shift solenoid valve D and the PCM, then go to step 1. If the HDS indicates NOT COMPLETED, return to step 22 and recheck.

DTC P0983: Shift Solenoid Valve D (Open)

NOTE:
- Before you troubleshoot, record all freeze data and any on-board snapshot, and review General Troubleshooting Information (see page 14-4).
- This code is caused by an electrical circuit problem and cannot be caused by a mechanical problem in the transmission.

1. Clear the DTC with the HDS.
2. Start the engine in P. With the brake pedal pressed, shift to N, and wait for at least 1 second.
3. Check if DTC P0983 records.

   Is DTC P0983 indicated?

   YES—Go to step 7.

   NO—Go to step 4.
4. Select Shift Solenoid D in Miscellaneous Test Menu, and test shift solenoid valve D with the HDS.

   Is a clicking sound heard?

   YES—Go to step 5.

   NO—Go to step 7.
5. Start the engine in P. With the brake pedal pressed, shift to N, and wait for at least 1 second.
6. Monitor the OBD STATUS for P0983 in the DTCs MENU with the HDS.

   Does the HDS indicate FAILED?

   YES—Go to step 7.

   NO—Intermittent failure, the system is OK at this time. Check for poor connections or loose terminals at shift solenoid valve D and the PCM. If the HDS indicates NOT COMPLETED, return to step 4 and recheck.
7. Turn the ignition switch to LOCK (0).
8. Jump the SCS line with the HDS.
9. Disconnect PCM connector C (22P).
10. Measure the resistance between PCM connector terminal C2 and body ground.

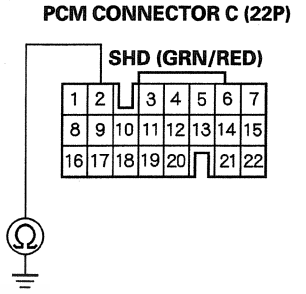

Wire side of female terminals

Is there 12—25 Ω ?

YES—Go to step 15.

NO—Go to step 11.
11. Disconnect the shift solenoid harness connector.

(cont'd)

DTC Troubleshooting (cont'd)

12. Check for continuity between PCM connector terminal C2 and shift solenoid harness connector terminal No. 1.

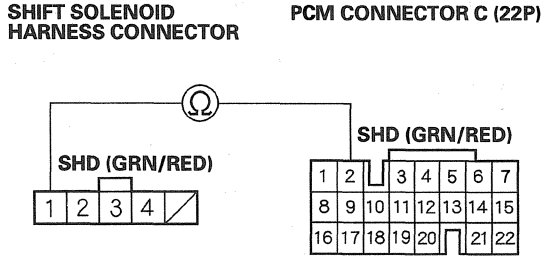

Wire side of female terminals

Is there continuity?

YES—Go to step 13.

NO—Repair an open in the wire between PCM connector terminal C2 and the shift solenoid harness connector, then go to step 20.

13. Remove the shift solenoid harness connector (see page 14-178).

14. Check for continuity between shift solenoid harness connector terminal No. 1 and the shift solenoid valve D connector terminal.

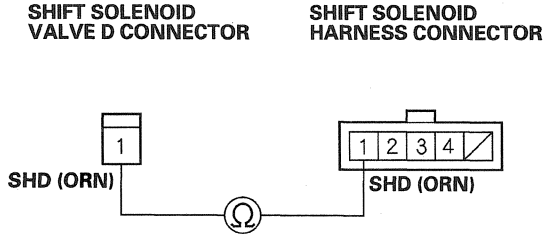

Wire side of female terminals

Terminal side of male terminals

Is there continuity?

YES—Replace shift solenoid valve D (see page 14-178), then go to step 20.

NO—Replace the shift solenoid harness (see page 14-178), then go to step 20.

15. Reconnect all connectors.

16. Update the A/T software in the PCM if it does not have the latest software (see page 11-230), or substitute a known-good PCM (see page 11-7).

17. Start the engine in P, and wait for at least 1 second. With the brake pedal pressed, shift to N, and wait for at least 1 second.

18. Check for Pending or Confirmed DTCs with the HDS.

Is DTC P0983 indicated?

YES—If the PCM was updated, substitute a known-good PCM (see page 11-7), then recheck. If the PCM was substituted, go to step 1.

NO—Go to step 19.

19. Monitor the OBD STATUS for P0983 in the DTCs MENU with the HDS.

Does the HDS indicate PASSED?

YES—If the PCM was updated, troubleshooting is complete. If the PCM was substituted, replace the original PCM (see page 11-232). If any other Pending or Confirmed DTCs were indicated on step 18, go to the indicated DTC's troubleshooting. ■

NO—Check for poor connections and loose terminals at shift solenoid valve D and the PCM. If the PCM was updated, substitute a known-good PCM (see page 11-7), then recheck. If the PCM was substituted, go to step 1. If the HDS indicates NOT COMPLETED, return to step 17 and recheck.

20. Clear the DTC with the HDS.

21. Start the engine in P, and wait for at least 1 second. With the brake pedal pressed, shift to N, and wait for at least 1 second.

22. Check for Pending or Confirmed DTCs with the HDS.

    Is DTC P0983 indicated?

    YES—Check for poor connections and loose terminals at shift solenoid valve D and the PCM, then go to step 1.

    NO—Go to step 23.

23. Monitor the OBD STATUS for P0983 in the DTCs MENU with the HDS.

    Does the HDS indicate PASSED?

    YES—Troubleshooting is complete. If any other Pending or Confirmed DTCs were indicated on step 22, go to the indicated DTC's troubleshooting. ■

    NO—Check for poor connections and loose terminals at shift solenoid valve D and the PCM, then go to step 1. If the HDS indicates NOT COMPLETED, return to step 21 and recheck.

DTC P1717: Transmission Range Switch ATP RVS Switch (Open)

NOTE:
- Before you troubleshoot, record all freeze data and any on-board snapshot, and review General Troubleshooting Information (see page 14-4).
- This code is caused by an electrical circuit problem and cannot be caused by a mechanical problem in the transmission.

1. Turn the ignition switch to ON (II).

2. Shift to R, and verify the A/T R SWITCH signal with the HDS in the A/T Data List.

   Is the A/T R SWITCH ON?

   YES—Go to step 3.

   NO—Check for proper transmission range switch installation (see page 14-245), adjust the shift cable (see page 14-238), then recheck.

3. Check the Reverse Switch (ATP RVS) signal with the HDS.

   Is the Reverse Switch (ATP RVS) ON?

   YES—Intermittent failure, the system is OK at this time. ■

   NO—Go to step 4.

(cont'd)

DTC Troubleshooting (cont'd)

4. Turn the ignition switch to LOCK (0).
5. Disconnect the transmission range switch connector.
6. Check for continuity between transmission range switch connector terminal No. 6 and body ground.

TRANSMISSION RANGE SWITCH CONNECTOR

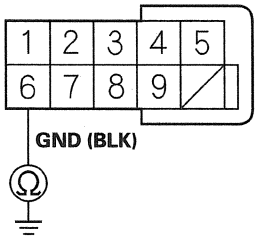

Wire side of female terminals

Is there continuity?

YES—Go to step 7.

NO—Repair an open in the wire between transmission range switch connector terminal No. 6 and ground (G101, G102), or repair poor ground (G101, G102), then go to step 15.

7. Turn the ignition switch to ON (II).
8. Measure the voltage between transmission range switch connector terminals No. 2 and No. 6.

TRANSMISSION RANGE SWITCH CONNECTOR

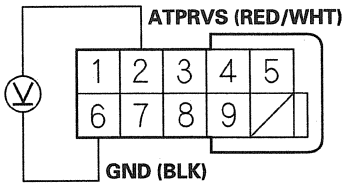

Wire side of female terminals

Is there battery voltage?

YES—Go to step 9.

NO—Repair an open in the wire between PCM connector terminal C21 and the transmission range switch, then go to step 15.

9. Check for continuity between the No. 2 and No. 6 terminals at the transmission range switch in all five shift lever positions.

TRANSMISSION RANGE SWITCH CONNECTOR

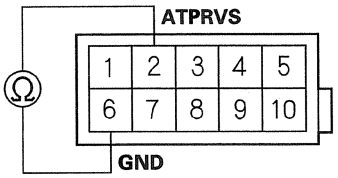

Terminal side of male terminals

Is there continuity when the shift lever is in P, R, and N, and no continuity when the shift lever is in D and S?

YES—Go to step 10.

NO—Replace the transmission range switch (see page 14-245), then go to step 15.

10. Connect the transmission range switch connector.

11. Update the A/T software in the PCM if it does not have the latest software (see page 11-230), or substitute a known-good PCM (see page 11-7).

12. Start the engine in P. With the brake pedal pressed, shift to R, and stop for at least 2 seconds in R, then shift to N.

13. Check for Pending or Confirmed DTCs with the HDS.

    Is DTC P1717 indicated?

    YES—If the PCM was updated, substitute a known-good PCM (see page 11-7), then recheck. If the PCM was substituted, go to step 1.

    NO—Go to step 14.

14. Monitor the OBD STATUS for P1717 in the DTCs MENU with the HDS.

    Does the HDS indicate PASSED?

    YES—If the PCM was updated, troubleshooting is complete. If the PCM was substituted, replace the original PCM (see page 11-232). If any other Pending or Confirmed DTCs were indicated on step 13, go to the indicated DTC's troubleshooting. ■

    NO—Check for poor connections and loose terminals at the transmission range switch and the PCM. If the PCM was updated, substitute a known-good PCM (see page 11-7). then recheck. If the PCM was substituted, go to step 1. If the HDS indicates NOT COMPLETED, return to step 12 and recheck.

15. Clear the DTC with the HDS.

16. Start the engine in P. With the brake pedal pressed, shift to R, and stop for at least 2 seconds in R, then shift to N.

17. Check for Pending or Confirmed DTCs with the HDS.

    Is DTC P1717 indicated?

    YES—Check for poor connections and loose terminals at the transmission range switch and the PCM, then go to step 1.

    NO—Go to step 18.

18. Monitor the OBD STATUS for P1717 in the DTCs MENU with the HDS.

    Does the HDS indicate PASSED?

    YES—Troubleshooting is complete. If any other Pending or Confirmed DTCs were indicated on step 17, go to the indicated DTC's troubleshooting. ■

    NO—Check for poor connections and loose terminals at the transmission range switch and the PCM, then go to step 1. If the HDS indicates NOT COMPLETED, return to step 16 and recheck.

DTC Troubleshooting (cont'd)

DTC P1743: Shift Error

NOTE: Before you troubleshoot, record all freeze data and any on-board snapshot, and review General Troubleshooting Information (see page 14-4).

1. Warm up the engine to normal operating temperature (the radiator fan comes on).
2. Make sure that the transmission is filled to the proper level, and check for fluid leaks.
3. Drain the ATF (see step 4 on page 14-196) through a strainer. Inspect the strainer for metal debris or excessive clutch material.

   Does the strainer have metal debris or excessive clutch material?

   YES—Replace the transmission, then go to step 8.

   NO—Replace the ATF (see step 6 on page 14-196), then go to step 4.
4. Clear the DTC with the HDS.
5. Test-drive the vehicle with the shift lever in D, and let the transmission shift through all five gears, then slow down to a stop.
6. Monitor the OBD STATUS for P1743 in the DTCs MENU with the HDS.

   Does the HDS indicate FAILED?

   YES—Repair shift valve E in the main valve body (see page 14-278), replace the main valve body, or replace the transmission, then go to step 7.

   NO—Intermittent failure, the system is OK at this time. If the HDS indicates NOT COMPLETED, return to step 5 and recheck. ■
7. Clear the DTC with the HDS.
8. Test-drive the vehicle with the shift lever in D, and let the transmission shift through all five gears, then slow down to a stop.
9. Monitor the OBD STATUS for P1743 in the DTCs MENU with the HDS.

   Does the HDS indicate PASSED?

   YES—Troubleshooting is complete. ■

   NO—Return to step 4 and recheck. If the HDS indicates NOT COMPLETED, return to step 8 and recheck.

DTC P1744: Shift Error

NOTE: Before you troubleshoot, record all freeze data and any on-board snapshot, and review General Troubleshooting Information (see page 14-4).

1. Warm up the engine to normal operating temperature (the radiator fan comes on).

2. Make sure that the transmission is filled to the proper level, and check for fluid leaks.

3. Drain the ATF (see step 4 on page 14-196) through a strainer. Inspect the strainer for metal debris or excessive clutch material.

   Does the strainer have metal debris or excessive clutch material?

   YES—Replace the transmission, then go to step 8.

   NO—Replace the ATF (see step 6 on page 14-196), then go to step 4.

4. Clear the DTC with the HDS.

5. Test-drive the vehicle with the shift lever in D, and let the transmission shift through all five gears, then slow down to a stop.

6. Monitor the OBD STATUS for P1744 in the DTCs MENU with the HDS.

   Does the HDS indicate FAILED?

   YES—Repair shift valve E in the main valve body (see page 14-278), replace the main valve body, or replace the transmission, then go to step 7.

   NO—Intermittent failure, the system is OK at this time. If the HDS indicates NOT COMPLETED, return to step 4 and recheck. ■

7. Clear the DTC with the HDS.

8. Test-drive the vehicle with the shift lever in D, and let the transmission shift through all five gears, then slow down to a stop.

9. Monitor the OBD STATUS for P1744 in the DTCs MENU with the HDS.

   Does the HDS indicate PASSED?

   YES—Troubleshooting is complete. ■

   NO—Return to step 4 and recheck. If the HDS indicates NOT COMPLETED, return to step 8 and recheck.

DTC Troubleshooting (cont'd)

DTC P1745: Shift Error

NOTE: Before you troubleshoot, record all freeze data and any on-board snapshot, and review General Troubleshooting Information (see page 14-4).

1. Warm up the engine to normal operating temperature (the radiator fan comes on).
2. Make sure that the transmission is filled to the proper level, and check for fluid leaks.
3. Drain the ATF (see step 4 on page 14-196) through a strainer. Inspect the strainer for metal debris or excessive clutch material.

   Does the strainer have metal debris or excessive clutch material?

   YES—Replace the transmission, then go to step 8.

   NO—Replace the ATF (see step 6 on page 14-196), then go to step 4.
4. Clear the DTC with the HDS.
5. Test-drive the vehicle with the shift lever in D, and let the transmission shift through all five gears, then slow down to a stop.
6. Monitor the OBD STATUS for P1745 in the DTCs MENU with the HDS.

   Does the HDS indicate FAILED?

   YES—Repair the servo control valve in the main valve body (see page 14-278), servo valve in the regulator valve body (see page 14-281), or replace the main valve body, regulator valve body, or replace the transmission, then go to step 7.

   NO—Intermittent failure, the system is OK at this time. If the HDS indicates NOT COMPLETED, return to step 5 and recheck. ■
7. Clear the DTC with the HDS.
8. Test-drive the vehicle with the shift lever in D, and let the transmission shift through all five gears, then slow down to a stop.
9. Monitor the OBD STATUS for P1745 in the DTCs MENU with the HDS.

   Does the HDS indicate PASSED?

   YES—Troubleshooting is complete. ■

   NO—Return to step 4 and recheck. If the HDS indicates NOT COMPLETED, return to step 8 and recheck.

DTC P1780: Shift Control System (Transmission Default Mode)

NOTE: Before you troubleshoot, record all freeze data and any on-board snapshot, and review General Troubleshooting Information (see page 14-4).

1. Clear the DTC with the HDS.
2. Test-drive the vehicle with the shift lever in D, and let the transmission shift through all five gears, then slow down to a stop.
3. Check for Pending or Confirmed DTCs with the HDS.

   NOTE: DTC P1780 means there is one or more A/T DTCs about the shift control system.

   Are there other DTCs?

   YES—Troubleshoot the problem indicated by the DTC. ■

   NO—Go to step 4.

4. Update the A/T software in the PCM if it does not have the latest software (see page 11-230), or substitute a known-good PCM (see page 11-7).
5. Test-drive the vehicle with the shift lever in D, and let the transmission shift through all five gears, then slow down to a stop.
6. Check for Pending or Confirmed DTCs with the HDS.

   Is DTC P1780 indicated?

   YES—If the PCM was updated, substitute a known-good PCM (see page 11-7), then recheck. If the PCM was substituted, go to step 1.

   NO—Go to step 7.

7. Monitor the OBD STATUS for P1780 in the DTCs MENU with the HDS.

   Does the HDS indicate PASSED?

   YES—If the PCM was updated, troubleshooting is complete. If the PCM was substituted, replace the original PCM (see page 11-232). If any other Pending or Confirmed DTCs were indicated on step 6, go to the indicated DTC's troubleshooting. ■

   NO—Check for poor connections and loose terminals at the PCM. If the PCM was updated, substitute a known-good PCM (see page 11-7), then recheck. If the PCM was substituted, go to step 1. If the HDS indicates NOT COMPLETED, return to step 5 and recheck.

Road Test

1. Warm up the engine to normal operating temperature (the radiator fan comes on).
2. Apply the parking brake, and block all four wheels. Start the engine, then shift to D while pressing the brake pedal. Press the accelerator pedal, and release it suddenly. The engine should not stall.
3. Repeat step 2 in all shift lever positions.
4. Connect the HDS to the DLC (A) located under the driver's side of the dashboard.

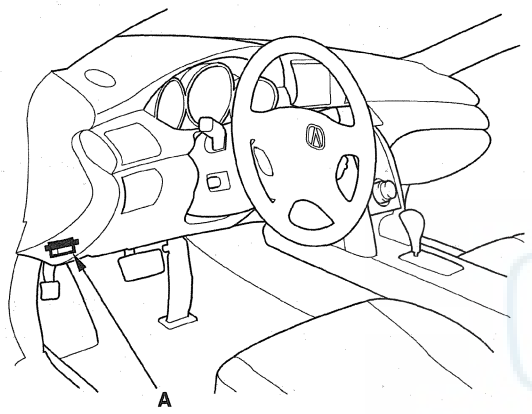

5. Turn the ignition switch to ON (II). Make sure the HDS communicates with the PCM. If it does not, go to the DLC circuit troubleshooting (see page 11-211).
6. Prepare the HDS to take a HIGH SPEED SNAPSHOT (refer to the HDS user's guide for more details if needed):
   - Select High Speed icon.
   - Select these parameters:
     - Vehicle Speed
     - Output Shaft (Countershaft) Speed (rpm)
     - Input Shaft (Mainshaft) Speed (rpm)
     - Engine Speed
     - TP Sensor (1)
     - APP Sensor A (V)
     - ATF Temp sensor (V)
     - Battery Voltage
     - Shift Control
     - Brake Switch
   - Set the Trigger Type to Parameter.
   - Adjust the Parameter setting to APP Sensor A above 0.75 V.
   - Set the recording time to 60 seconds.
   - Set the trigger point to −30 seconds.
7. Find a suitable level road. When you are ready to do the test, press OK on the HDS.
8. Monitor the HDS, and accelerate quickly until the APP Sensor A reads 0.75 V. Maintain a steady throttle until the transmission shifts to 5th gear, then slow the vehicle and come to a stop.
9. Save the snapshot if the entire event was recorded, or increase the recording time setting as necessary, and repeat step 8.
10. Adjust the parameter setting to 2.25 V. Test-drive the vehicle again. While monitoring the HDS, accelerate quickly until the APP Sensor A reads 2.25 V. Maintain a steady throttle until the transmission shifts to 5th gear (or reasonable speed), then slow the vehicle and come to a stop.
11. Save the snapshot if the entire event was recorded, or increase the recording time setting as necessary, and repeat step 10.
12. Accelerate quickly until the accelerator pedal is to the floor. Maintain a steady pedal until the transmission shifts to 3rd gear, then slow to a stop, and save the snapshot.
13. Review each snapshot individually, and compare the Shift Control, the APP Sensor A voltage, and the Vehicle Speed to the table below.

Upshift: D Position

Accelerator pedal position sensor voltage: 0.75 V	
1st→2nd	9—10 mph (14—16 km/h)
2nd→3rd	14—16 mph (23—26 km/h)
3rd→4th	24—27 mph (38—43 km/h)
4th→5th	43—47 mph (69—75 km/h)
Lock-up ON	48—51 mph (78—82 km/h)
Accelerator pedal position sensor voltage: 2.25 V	
1st→2nd	21—22 mph (33—36 km/h)
2nd→3rd	40—44 mph (65—71 km/h)
3rd→4th	70—74 mph (113—119 km/h)
4th→5th	99—103 mph (159—165 km/h)
Lock-up ON	99—103 mph (159—165 km/h)
Fully-opened throttle Accelerator pedal position sensor voltage: 4.5 V	
1st→2nd	34—38 mph (55—61 km/h)
2nd→3rd	63—67 mph (102—108 km/h)
3rd→4th	98—101 mph (157—163 km/h)

Downshift: D Position (reference)

Accelerator pedal position sensor voltage: 0.75 V	
Lock-up OFF	45—47 mph (73—75 km/h)
5th→4th	35—39 mph (57—63 km/h)
4th→3rd	16—18 mph (25—29 km/h)
2nd→1st	6—8 mph (9—13 km/h)
Accelerator pedal position sensor voltage: 2.25 V	
Lock-up OFF	66—70 mph (107—113 km/h)
5th→4th	56—60 mph (90—96 km/h)
4th→3rd	25—29 mph (40—46 km/h)
3rd→2nd	14—18 mph (23—29 km/h)
2nd→1st	5—9 mph (8—14 km/h)
Fully-opened throttle Accelerator pedal position sensor voltage: 4.5 V	
4th→3rd	84—88 mph (135—141 km/h)
3rd→2nd	53—57 mph (85—91 km/h)
2nd→1st	26—30 mph (42—48 km/h)

14. Drive the vehicle in 4th or 5th gear in the sequential sportshift mode in S, then downshift to 2nd gear. The vehicle should immediately begin to slow down from engine braking.

15. Shift to R, accelerate from a stop at full throttle momentarily, and check for abnormal noise and clutch slippage.

16. Park the vehicle on a slope (about 16 degrees), apply the brake, and shift into P. Release the brake; the vehicle should not move.

    NOTE: Always use the brake to hold the vehicle, when stopped on an incline in gear. Depending on the grade of the incline, the vehicle could roll if the brake is released.

Stall Speed Test

1. Make sure the transmission fluid is filled to the upper level (see page 14-195).

2. Apply the parking brake, and block all four wheels.

3. Connect the HDS to the DLC (A) located under the driver's side of the dashboard.

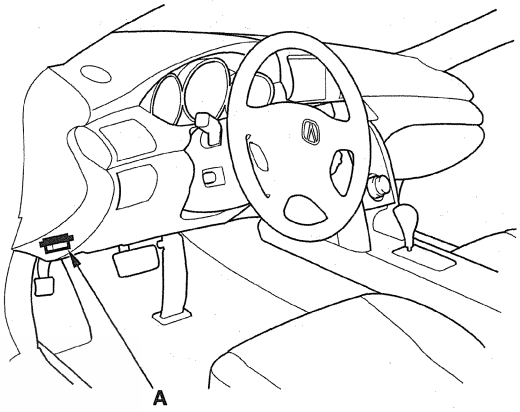

4. Turn the ignition switch to ON (II). Make sure the HDS communicates with the PCM. If it does not, go to the DLC circuit troubleshooting (see page 11-211).

5. Make sure the A/C switch OFF.

6. After the engine has warmed up to normal operating temperature (the radiator fan comes on), shift to D.

7. Firmly press and hold the brake pedal, then fully press the accelerator pedal for 6 to 8 seconds, and note the engine speed. Do not move the shift lever while raising the engine speed.

(cont'd)

Stall Speed Test (cont'd)

8. Allow 2 minutes for cooling, then repeat the test in R.

   NOTE:
   - Do not test stall speed for more than 10 seconds at a time.
   - Record the engine speed at 6—8 seconds after pressing the accelerator pedal. Higher engine speed will be indicated for 5 seconds.
   - Stall speed tests should be used for diagnostic purposes only.
   - The stall speed should be the same in D and R.
   - Do not test stall speed with the A/T pressure gauges installed.

   Stall Speed rpm:
   Specification: 1,850 rpm
   Service Limit: 1,700—2,000 rpm

9. If any of the stall speeds are out of the service limit, refer to the problems and probable causes listed in the table.

Problem	Probable causes
Stall speed rpm high in D and R	• ATF pump output low • Regulator valve stuck • Slipping clutch
Stall speed rpm high in R	Slippage of 5th clutch
Stall speed rpm low in D and R	• Engine output low • Engine throttle valve closed • Torque converter one-way clutch slipping

Pressure Test

Special Tools Required
- A/T pressure gauge set 07406-0020400 or 07406-0020401
- A/T pressure hose, 2,210 mm 07MAJ-PY4011A
- A/T pressure hose adapter 07MAJ-PY40120

NOTE:
- Disable the VSA by pressing the VSA OFF switch.
- VSA DTC(s) may come on during the test-drive. If the VSA DTC(s) come on, clear the DTC(s) with the HDS.

1. Make sure the transmission fluid is filled to the proper level (see page 14-195).

2. Raise the vehicle on a lift, and make sure it is securely supported.

3. Allow all four wheels to rotate freely.

4. Remove the splash shield.

5. Connect the HDS to the DLC (A) located under the driver's side of the dashboard.

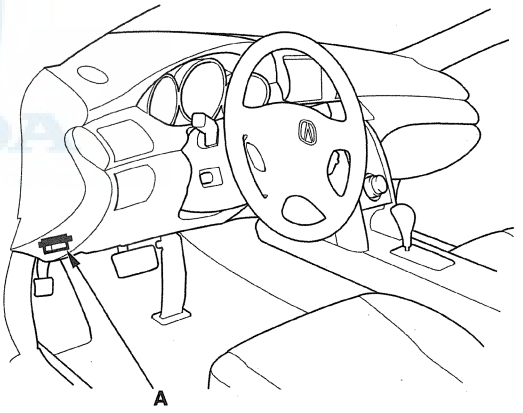

6. Turn the ignition switch to ON (II). Make sure the HDS communicates with the PCM. If it does not, go to the DLC circuit troubleshooting (see page 11-211).

7. Connect the oil pressure gauge to the line pressure inspection hole (A). Do not allow dust or other foreign particles to enter the hole while connecting the gauge.

A/T PRESSURE GAUGE SET 07406-0020400 or 07406-0020401

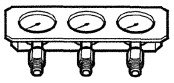

A/T PRESSURE HOSE, 2,210 mm 07MAJ-PY4011A



A/T PRESSURE HOSE ADAPTER 07MAJ-PY40120

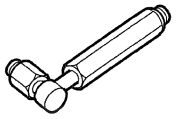

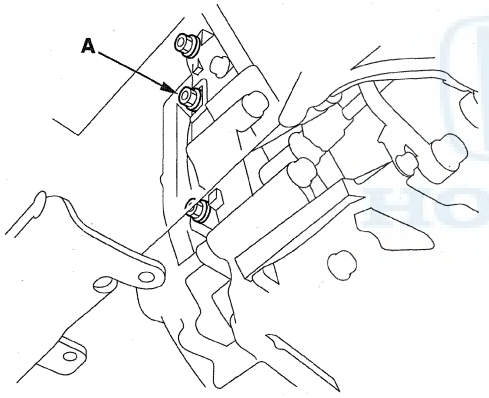

8. Start the engine, and warm it up to normal operating temperature (the radiator fan comes on).

9. Measure the line pressure at the line pressure inspection port (A) in the P or N position while holding the engine speed at 2,000 rpm.

   NOTE: Higher pressure may be indicated if measurements are made in the shift lever position other than P or N.

Pressure	Fluid Pressure	
	Standard	Service Limit
Line (A)	950—1,010 kPa (9.7—10.3 kgf/cm², 140—146 psi)	900 kPa (9.2 kgf/cm², 130 psi)

10. Turn the engine off, then disconnect the oil pressure gauge from the line pressure inspection port.

11. Install the sealing bolt to the line pressure inspection port with a new sealing washer, and tighten the bolt to 18 N·m (1.8 kgf·m, 13 lbf·ft). Do not reuse the old sealing washer.

12. Connect the oil pressure gauge to the 1st clutch pressure inspection port (B) and the 1st-hold clutch pressure inspection port (C).

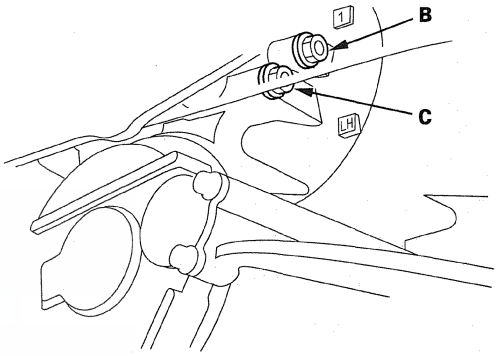

13. Remove the air cleaner (see page 11-366), and connect the oil pressure gauge to the 2nd clutch pressure inspection port (D). Then temporarily install the air cleaner.

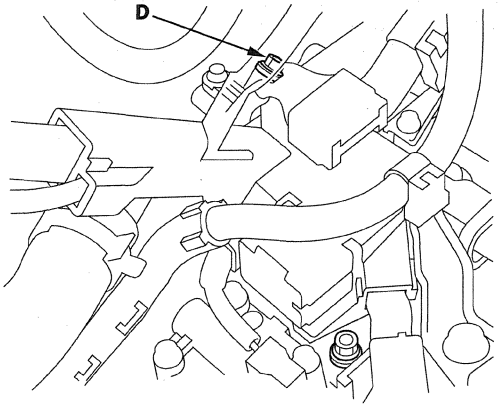

(cont'd)

Pressure Test (cont'd)

14. Start the engine, and shift into S.

15. Press the paddle shifter + (upshift switch), and make sure the transmission is in 1st gear. Measure the 1st clutch pressure at the 1st clutch pressure inspection port and 1st-hold clutch pressure at the 1st-hold clutch pressure inspection port while holding the engine speed at 2,000 rpm.

16. Upshift to 2nd gear by pressing the paddle shifter +, and measure the 2nd clutch pressure at the 2nd clutch pressure inspection port while holding the engine speed at 2,000 rpm.

Pressure	Fluid Pressure	
	Standard	Service Limit
1st clutch (B) 2nd clutch (D)	940—1,020 kPa (9.6—10.4 kgf/cm², 140—148 psi)	890 kPa (9.1 kgf/cm², 130 psi)
1st-hold clutch (C)	680—760 kPa (6.9—7.7 kgf/cm², 98—110 psi)	630 kPa (6.4 kgf/cm², 91 psi)

17. Turn the engine off, remove the air cleaner, then disconnect the oil pressure gauges from the 1st clutch pressure, 1st-hold clutch pressure, and 2nd clutch pressure inspection ports.

18. Install the sealing bolts in the 1st clutch pressure, 1st-clutch hold clutch pressure, and 2nd clutch pressure inspection ports with new sealing washers, and tighten the bolts to 18 N·m (1.8 kgf·m, 13 lbf·ft). Do not reuse the old sealing washers.

19. Install the air cleaner (see page 11-366).

20. Connect the oil pressure gauge to the 3rd clutch pressure inspection port (E) and the 5th clutch pressure inspection port (G).

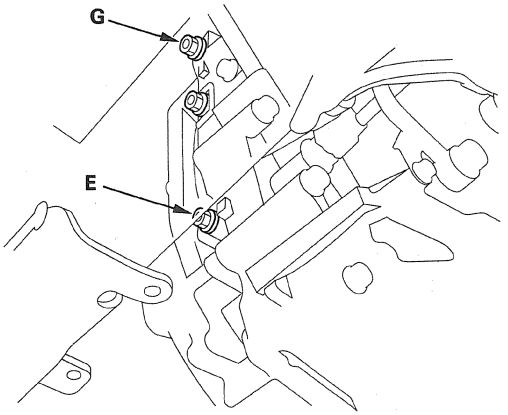

21. Connect the oil pressure gauge to the 4th clutch pressure inspection port (F).

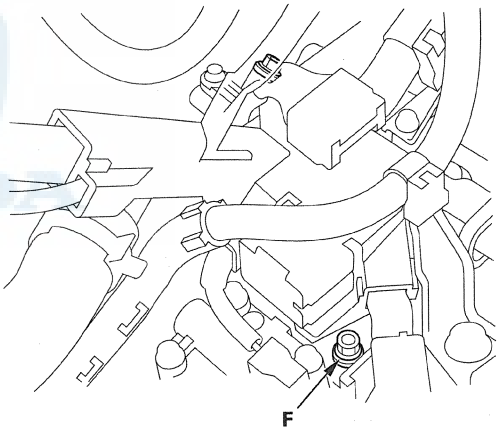

22. Start the engine, and shift into S.

23. Upshift to 3rd gear by pressing the paddle shifter +, and measure the 3rd clutch pressure at the 3rd clutch pressure inspection port while holding the engine speed at 2,000 rpm.

24. Upshift to 4th gear by pressing the paddle shifter +, and measure the 4th clutch pressure at the 4th clutch pressure inspection port while holding the engine speed at 2,000 rpm.

25. Upshift to 5th gear by pressing the paddle shifter +, and measure the 5th clutch pressure at the 5th clutch pressure inspection port while holding the engine speed at 2,000 rpm.

Pressure	Fluid Pressure	
	Standard	Service Limit
3rd clutch (E) 4th clutch (F) 5th clutch (G)	940—1,020 kPa (9.6—10.4 kgf/cm², 140—148 psi)	890 kPa (9.1 kgf/cm², 130 psi)

26. Bring the engine back to an idle, then apply the brake pedal to stop the wheels from rotating.

27. Shift to R, then release the brake pedal. Raise the engine speed to 2,000 rpm, and measure the 5th clutch pressure at the 5th clutch pressure inspection port.

Pressure	Fluid Pressure	
	Standard	Service Limit
5th clutch (G) in R	940—1,020 kPa (9.6—10.4 kgf/cm², 140—148 psi)	890 kPa (9.1 kgf/cm², 130 psi)

28. Turn the engine off, then disconnect the oil pressure gauges from the 3rd, 4th, and 5th clutch pressure inspection ports.

29. Install the sealing bolts in the 3rd, 4th, and 5th clutch pressure inspection ports with new sealing washers, and tighten the bolts to 18 N·m (1.8 kgf·m, 13 lbf·ft). *Do not reuse the old sealing washers.*

30. If any of the pressures are out of the service limit, refer to the problems and probable causes listed in the table.

Problem	Probable causes
No or low line pressure	• Torque converter • ATF pump • Regulator valve • Torque converter check valve • Clogged ATF strainer
No or low 1st clutch pressure	• 1st clutch • O-rings
No or low 2nd clutch pressure	• 2nd clutch • O-rings
No or low 3rd clutch pressure	• 3rd clutch • O-rings
No or low 4th clutch pressure	• 4th clutch • O-rings
No or low 5th clutch pressure	• 5th clutch • O-rings
No or low 5th clutch pressure in the R position	• Servo valve • 5th clutch • O-rings
No or low 1st-hold clutch pressure	• 1st-hold clutch • O-rings

31. Install the splash shield.

Shift Solenoid Valve Test, Replacement, and Shift Solenoid Wire Harness Replacement

1. Connect the HDS to the DLC (A) located under the driver's side of the dashboard.

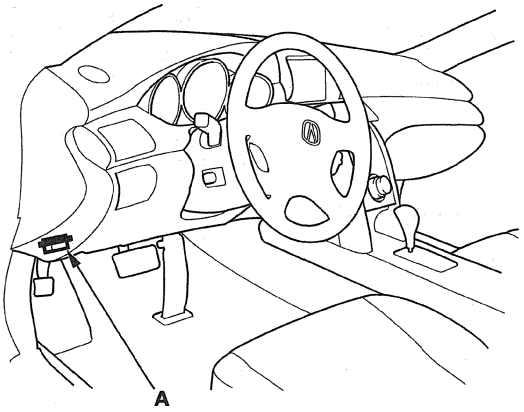

2. Turn the ignition switch to ON (II). Make sure the HDS communicates with the PCM. If it does not, go to the DLC circuit troubleshooting (see page 11-211).

3. Select Shift Solenoid A, B, C, or D in the Miscellaneous Test Menu on the HDS.

4. Check that shift solenoid valves A, B, C, and D operate with the HDS. A clicking sound should be heard.

   - If a clicking sound is heard, the valves are OK. The test is complete, disconnect the HDS.
   - If no clicking sound is heard, go to step 5, and test the solenoid valves.

5. Do the battery removal procedure (see page 22-92).

6. Remove the air cleaner (see page 11-366).

7. Remove the battery base.

8. Remove the nuts securing the shift cable bracket (A).

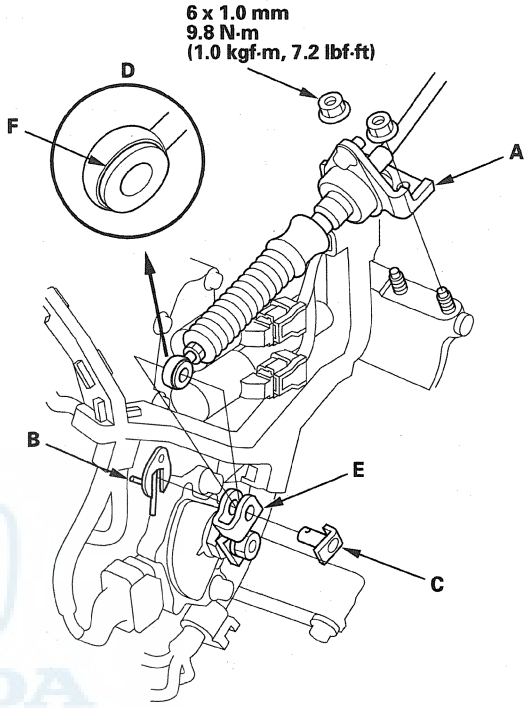

9. Remove the spring clip/washer (B) and control pin (C), then separate the shift cable end (D) from the control lever (E).

10. Check the bushing (F) in the shift cable end for a proper fit and wear. If the bushing is loose or worn, replace the shift cable (see page 14-235).

11. Disconnect the A/T clutch pressure control solenoid valve A connector (A), A/T clutch pressure control solenoid valve B connector (B), 4th clutch transmission fluid pressure switch connector (C), shift solenoid harness connector (D), and input shaft (mainshaft) speed sensor connector (E).

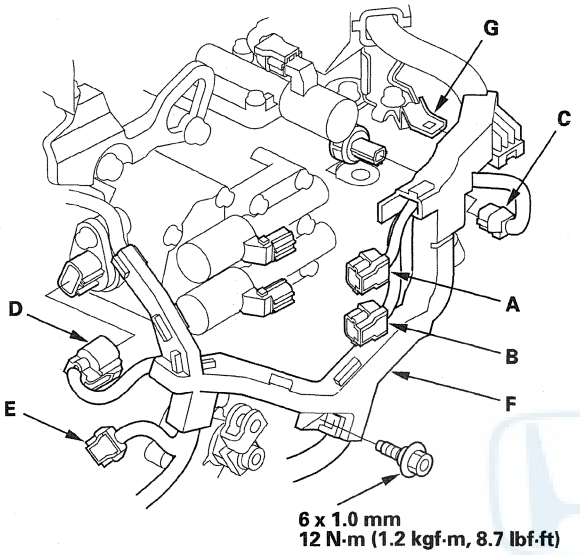

12. Remove the bolt securing the harness cover (F), and remove the harness cover from its bracket (G).

13. Remove the A/T clutch pressure control solenoid valves A and B, ATF pipes (C), and gasket (D).

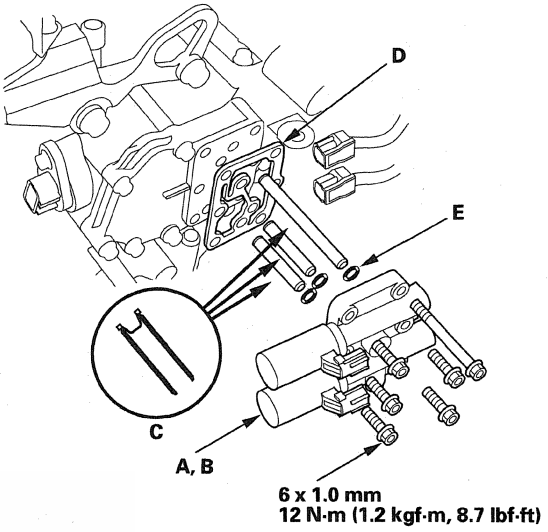

14. Replace the gasket and O-rings (E) with new ones when installing the A/T clutch pressure control solenoid valves A and B.

15. Remove the solenoid valve cover (A), dowel pins (B), and gasket (C).

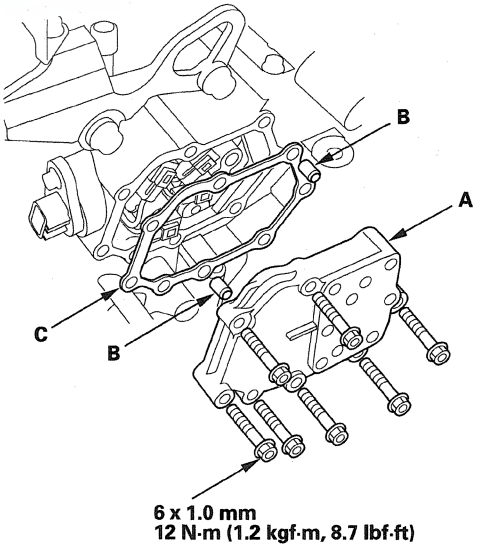

16. Replace the gasket with a new one when installing the solenoid valve cover.

(cont'd)

Shift Solenoid Valve Test, Replacement, and Shift Solenoid Wire Harness Replacement (cont'd)

17. Disconnect the connectors from the shift solenoid valve(s) that did not click.

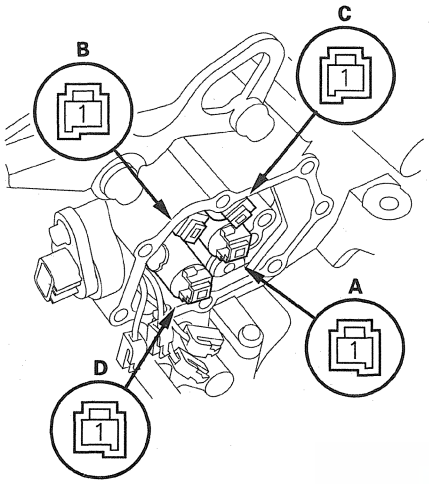

18. Measure the resistance of the shift solenoid valve between the connector terminal and body ground.

    Standard: 12—25 Ω

    - If the resistance is out of standard, go to step 21 and replace the shift solenoid valve.
    - If the resistance is within the standard, go to step 19 and check solenoid valve for a clicking sound.

19. Connect a jumper wire from the negative battery terminal to the body ground, and connect another jumper wire from the positive battery terminal to each solenoid valve terminal individually. A clicking sound should be heard.

    - If a clicking sound is heard, go to step 20 and replace the shift solenoid harness.
    - If no clicking sound is heard, go to step 21 and replace the shift solenoid valve.

20. Remove the shift solenoid harness connector (A), and replace it. Install a new O-ring (B) on the shift solenoid harness connector, and install the connector in the transmission housing, then go to step 27.

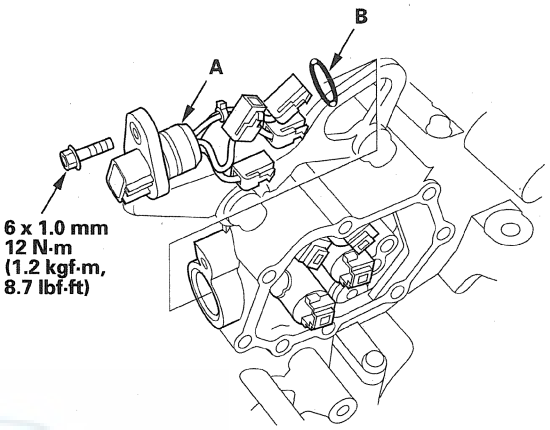

21. Remove the necessary mounting bolts, then remove the affected shift solenoid valves.

    NOTE: Shift solenoid valves A and C use the same mounting bolt.

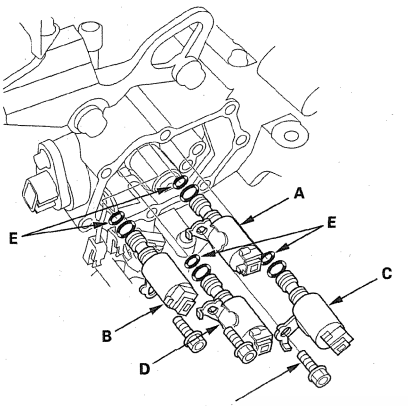

22. Install new O-rings (two O-rings per solenoid valve) (E) on the reused solenoid valves.

    NOTE: A new solenoid valve comes with new O-rings. If you install a new solenoid valve, use the O-rings provided with it.

23. If shift solenoid valve D was replaced, install shift solenoid valve D (black connector) by holding the shift solenoid valve body; make sure the mounting bracket contacts the accumulator body.

    NOTE: Do not hold the solenoid valve by the connector when installing the solenoid valve. Be sure to hold the solenoid valve body.

24. If shift solenoid valve A was replaced, install shift solenoid valve A (black connector) by holding the shift solenoid valve body; make sure the mounting bracket contacts the accumulator body.

25. If shift solenoid valve C was replaced, install shift solenoid valve C (brown connector) by holding the shift solenoid valve body; make sure the mounting bracket contacts the bracket of shift solenoid valve A.

    NOTE: Do not install shift solenoid valve C before installing shift solenoid valve A. If shift solenoid valve C is installed before installing shift solenoid valve A, it may damage the hydraulic control system.

26. If shift solenoid valve B was replaced, install shift solenoid valve B (brown connector) by holding the shift solenoid valve body; make sure the mounting bracket contacts the accumulator body.

27. Connect the harness terminals to the solenoids:

    - YEL wire connector to shift solenoid valve A.
    - GRN wire connector to shift solenoid valve C.
    - RED wire connector to shift solenoid valve B.
    - ORN wire connector to shift solenoid valve D.

28. Install the shift solenoid valve cover, dowel pins, and a new gasket.

29. Install the new solenoid valve body gasket on the solenoid valve cover, and install the ATF pipes with their filter side into the transmission housing. Install new O-rings over the ATF pipes.

30. Install A/T clutch pressure control solenoid valves A and B.

31. Install the harness cover on its bracket, and secure it with the bolt.

32. Check the connectors for rust, dirt, or oil, and clean or repair if necessary, then connect the connectors securely.

33. Apply molybdenum grease to the hole in the bushing in the shift cable end. Attach the shift cable end to the control lever, then insert the control pin into the control lever hole through the shift cable end, and secure the control pin with the spring clip/ washer.

34. Secure the shift cable bracket with the nuts.

35. Install the battery base.

36. Install the air cleaner (see page 11-366).

37. Do the battery installation procedure (see page 22-92).

A/T Clutch Pressure Control Solenoid Valve A and B Test

1. Connect the HDS to the DLC (A) located under the driver's side of the dashboard.

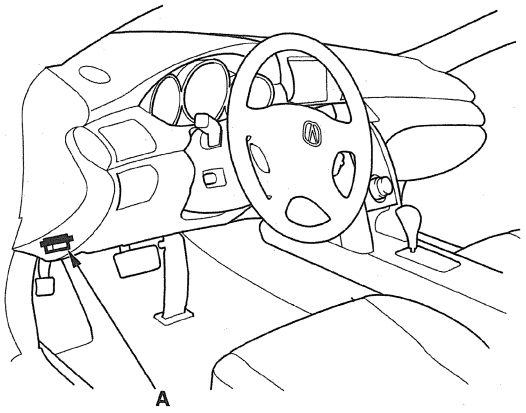

2. Turn the ignition switch to ON (II). Make sure the HDS communicates with the PCM. If it does not, go to the DLC circuit troubleshooting (see page 11-211).

3. Select Clutch Pressure Control (Linear) Solenoid A or B in the Miscellaneous Test Menu on the HDS.

4. Test A/T clutch pressure control solenoid valve A or B with the HDS.

   - If the valve tests OK, the test is complete. Disconnect the HDS.
   - If the valve does not test OK, follow the instructions on the HDS.
   - If the valve does not test OK, and the HDS does not determine the cause, go to step 5.

5. Do the battery removal procedure (see page 22-92).

6. Remove the air cleaner (see page 11-366).

7. Remove the battery base.

8. Disconnect the A/T clutch pressure control solenoid valve A and B connectors.

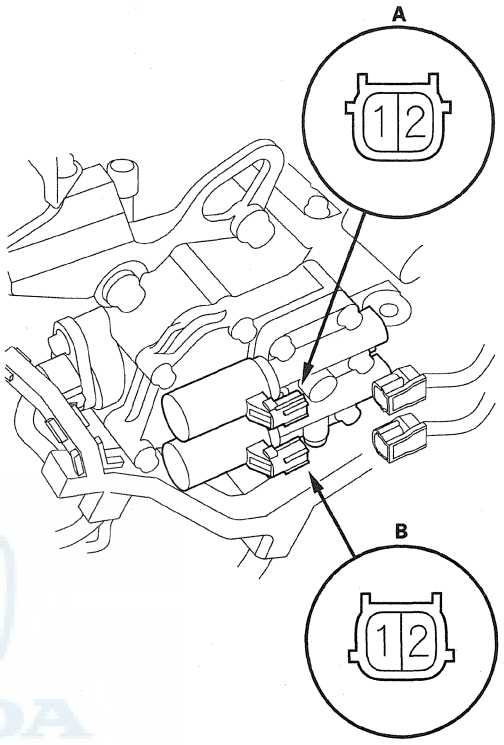

9. Measure A/T clutch pressure control solenoid valve A or B resistance at the connector terminals.

   Standard: 3—10 Ω

   - If the resistance is out of standard, replace A/T clutch pressure control solenoid valve A and B (see page 14-185).
   - If the resistance is within the standard, go to step 10.

10. Connect a jumper wire from the negative battery terminal to the solenoid valve A or B connector terminal No. 2, and connect another jumper wire from the positive battery terminal to the connector terminal No. 1. A clicking sound should be heard.

    - If a clicking sound is heard, the valve is OK. Reconnect the connector, and install all removed parts.
    - If no clicking sound is heard, go to step 11.

11. Remove the nuts securing the shift cable bracket (A).

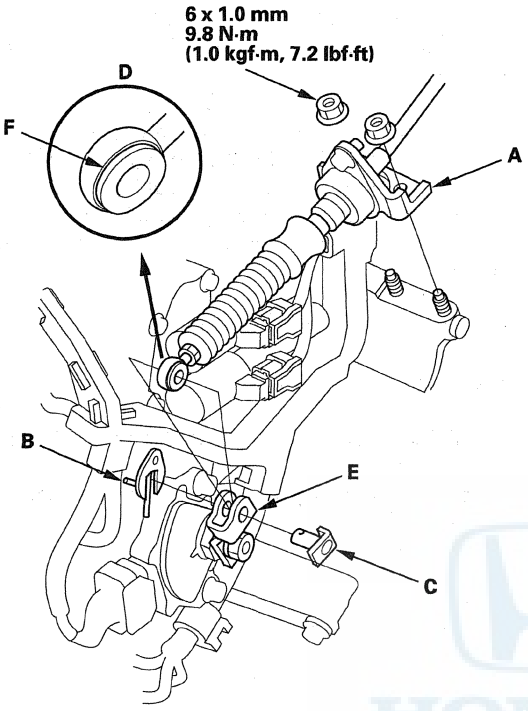

12. Remove the spring clip/washer (B) and control pin (C), then separate the shift cable end (D) from the control lever (E).

13. Check the bushing (F) in the shift cable end for a proper fit and wear. If the bushing is loose or worn, replace the shift cable (see page 14-235).

14. Disconnect the 4th clutch transmission fluid pressure switch connector (A), the shift solenoid harness connector (B), and the input shaft (mainshaft) speed sensor connector (C).

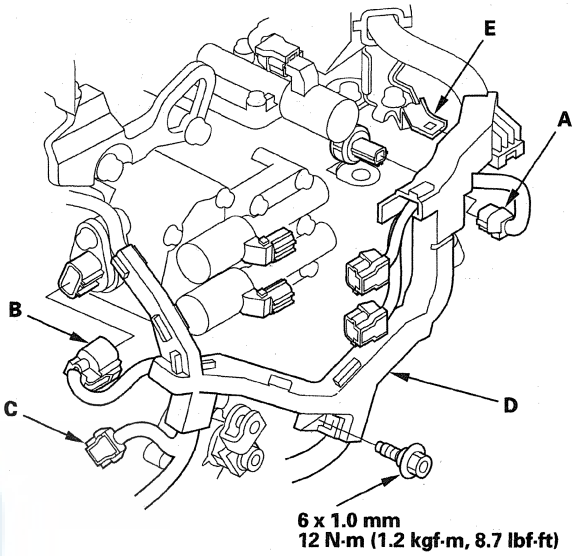

15. Remove the bolt securing the harness cover (D), and remove the harness cover from its bracket (E).

16. Remove the A/T clutch pressure control solenoid valves A and B, ATF pipes (C), gasket (D), and O-rings (E).

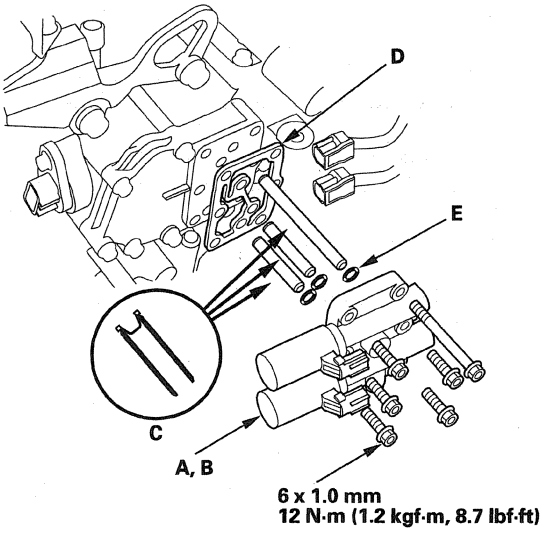

(cont'd)

A/T Clutch Pressure Control Solenoid Valve A and B Test (cont'd)

17. Check the fluid passage of the solenoid valve for contamination.

18. Connect a jumper wire from the negative battery terminal to A/T clutch pressure control solenoid valve A or B connector terminal No. 2, and connect another jumper wire from the positive battery terminal to connector terminal No. 1. Make sure A/T clutch pressure control solenoid valve A or B moves.

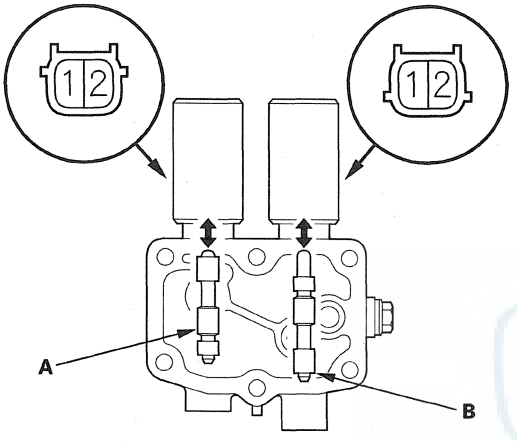

19. Disconnect one of the jumper wires, and check valve movement at the fluid passage in valve body mounting surface. If the valve binds or moves sluggishly, or if the solenoid valve does not operate, replace A/T clutch pressure control solenoid valves A and B.

20. Clean the mounting surface and fluid passage of the solenoid valve body and solenoid valve cover.

21. Install the new solenoid valve body gasket on the solenoid valve cover, and install the ATF pipes with the filter end in the transmission housing. Install new O-rings over the ATF pipes.

22. Install A/T clutch pressure control solenoid valves A and B.

23. Install the harness cover on its bracket, and secure it with the bolt.

24. Check the connectors for rust, dirt, or oil, and clean or repair if necessary, then connect the connectors securely.

25. Apply molybdenum grease to the hole in the bushing in the shift cable end. Attach the shift cable end to the control lever, then insert the control pin into the control lever hole through the shift cable end, and secure the control pin with the spring clip/ washer.

26. Secure the shift cable bracket with the nuts.

27. Install the battery base.

28. Install the air cleaner assembly (see page 11-366).

29. Do the battery installation procedure (see page 22-92).

A/T Clutch Pressure Control Solenoid Valve A and B Replacement

1. Do the battery removal procedure (see page 22-92).
2. Remove the air cleaner (see page 11-366).
3. Remove the battery base.
4. Remove the nuts securing the shift cable bracket (A).

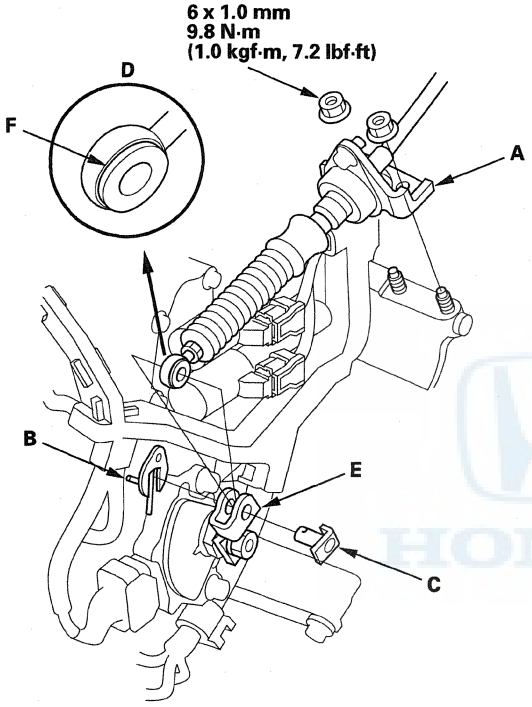

5. Remove the spring clip/washer (B) and control pin (C), then separate the shift cable end (D) from the control lever (E).
6. Check the bushing (F) in the shift cable end for a proper fit and wear. If the bushing is loose or worn, replace the shift cable (see page 14-235).
7. Disconnect the A/T clutch pressure control solenoid valve A connector (A), A/T clutch pressure control solenoid valve B connector (B), 4th clutch transmission fluid pressure switch connector (C), shift solenoid harness connector (D), and input shaft (mainshaft) speed sensor connector (E).

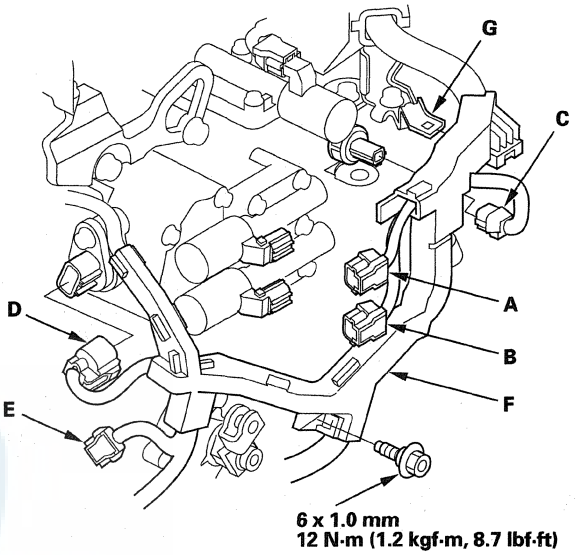

8. Remove the bolt securing the harness cover (F), and remove the harness cover from its bracket (G).

(cont'd)

A/T Clutch Pressure Control Solenoid Valve A and B Replacement (cont'd)

9. Remove the A/T clutch pressure control solenoid valves A and B, ATF pipes (C), gasket (D), and O-rings (E).

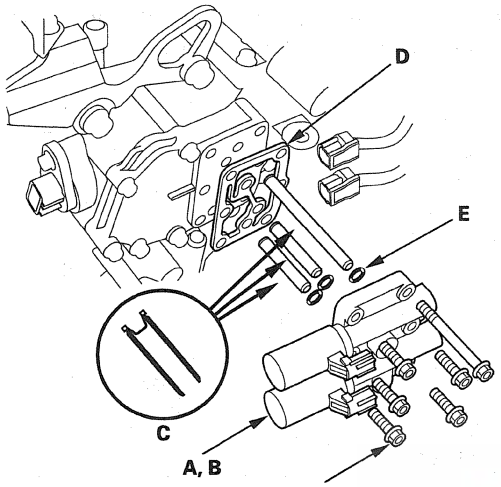

10. Check the fluid passage of the A/T clutch pressure control solenoid valve for dust or dirt, and clean the passage.

11. Install the new solenoid valve body gasket on the solenoid valve cover, and install the ATF pipes with the filter end in the transmission housing. Install the new O-rings over the ATF pipes.

12. Install A/T clutch pressure control solenoid valves A and B.

13. Install the harness cover on its bracket, and secure it with the bolt.

14. Check the connectors for rust, dirt, or oil, and clean or repair if necessary, then connect the connectors securely.

15. Apply molybdenum grease to the hole in the bushing in the shift cable end. Attach the shift cable end to the control lever, then insert the control pin into the control lever hole through the shift cable end, and secure the control pin with the spring clip/ washer.

16. Secure the shift cable bracket with the nuts.

17. Install the battery base.

18. Install the air cleaner (see page 11-366).

19. Do the battery installation procedure (see page 22-92).

A/T Clutch Pressure Control Solenoid Valve C Test

1. Connect the HDS to the DLC (A) located under the driver's side of the dashboard.

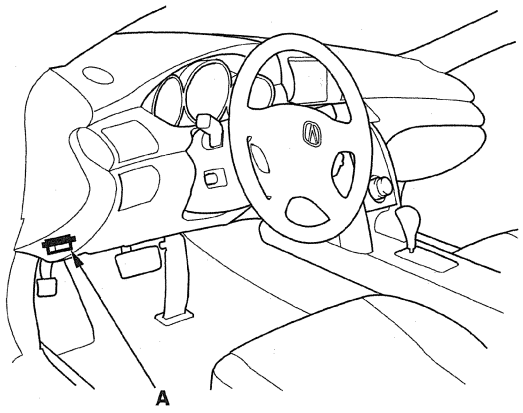

2. Turn the ignition switch to ON (II). Make sure the HDS communicates with the PCM. If it does not, go to the DLC circuit troubleshooting (see page 11-211).

3. Select Clutch Pressure Control (Linear) Solenoid C in the Miscellaneous Test Menu on the HDS.

4. Test A/T clutch pressure control solenoid valve C with the HDS.

   - If the valve tests OK, the test is complete. Disconnect the HDS.
   - If the valve does not test OK, follow the instructions on the HDS.
   - If the valve does not test OK, and the HDS does not determine the cause, go to step 5.

5. Do the battery removal procedure (see page 22-92).

6. Remove the air cleaner (see page 11-366).

7. Remove the battery base.

8. Disconnect the A/T clutch pressure control solenoid valve C connector.

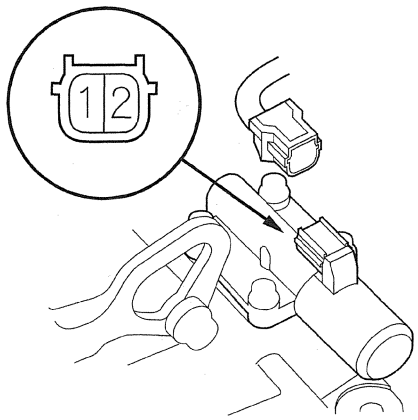

9. Measure A/T clutch pressure control solenoid valve C resistance at the connector terminals.

   Standard: 3—10 Ω

   - If the resistance is out of standard, replace A/T clutch pressure control solenoid valve C (see page 14-190).
   - If the resistance is within the standard, go to step 10.

10. Connect a jumper wire from the negative battery terminal to the solenoid valve C connector terminal No. 2, and connect another jumper wire from the positive battery terminal to the connector terminal No. 1. A clicking sound should be heard.

    - If a clicking sound is heard, the valve is OK. Reconnect the connector, and install all removed parts.
    - If no clicking sound is heard, go to step 11.

(cont'd)

A/T Clutch Pressure Control Solenoid Valve C Test (cont'd)

11. Remove A/T clutch pressure control solenoid valve C.

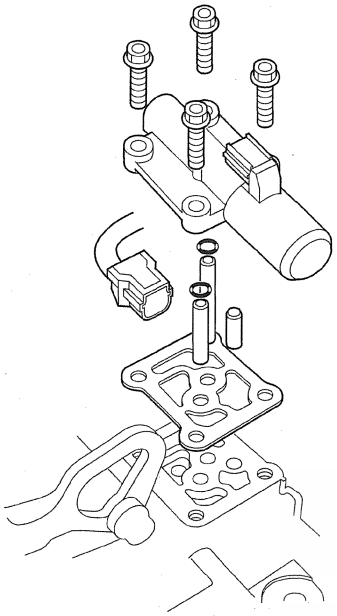

12. Remove the ATF joint pipes, O-rings, ATF pipe, and gasket.

13. Check the fluid passage of the solenoid valve for contamination.

14. Connect a jumper wire from the negative battery terminal to A/T clutch pressure control solenoid valve C connector terminal No. 2, and connect another jumper wire from the positive battery terminal to connector terminal No. 1. Make sure A/T clutch pressure control solenoid valve C moves.

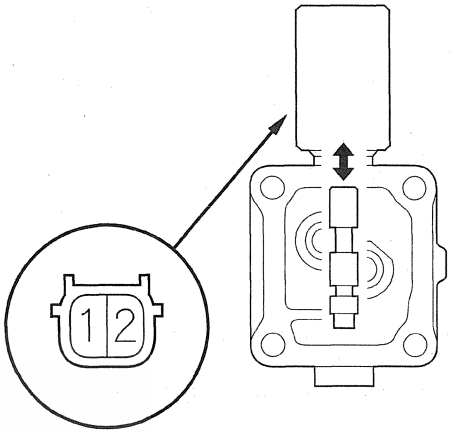

15. Disconnect one of the jumper wires, and check valve movement at the fluid passage in valve body mounting surface. If the valve binds or moves sluggishly, or if the solenoid valve does not operate, replace A/T clutch pressure control solenoid valve C.

16. Clean the mounting surfaces and the fluid passages of the solenoid valve body and transmission housing.

17. Install the 8 x 53 mm ATF joint pipe (A) with the filter end into its mounting hole (B).

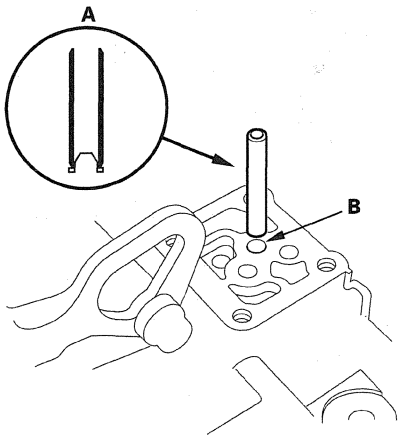

18. Check the height (A) of the 8 x 53 mm ATF joint pipe (B) between the top (C) of the pipe and solenoid valve body mounting surface (D). The height is about 7 mm (0.3 in). If the height is over 7 mm (0.3 in), push the pipe until it bottoms in the accumulator body.

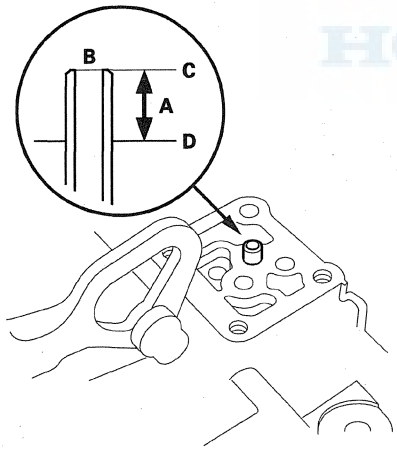

19. Install the new gasket (A) on the transmission housing, and install the 8 x 34.5 mm ATF joint pipe (B) with the filter end into the transmission housing and 8 x 25.2 mm ATF pipe (D).

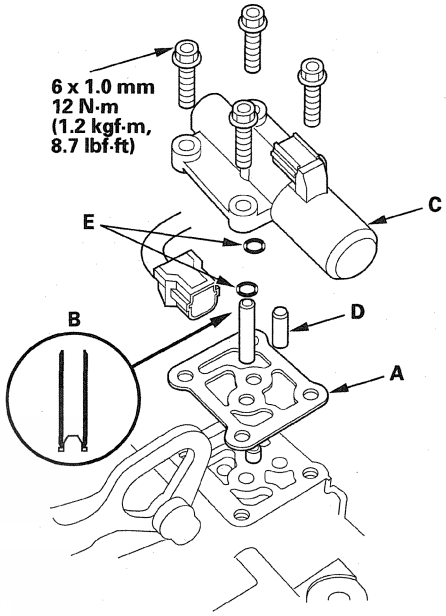

20. Install new O-rings (E) over the ATF joint pipes.
21. Install A/T clutch pressure control solenoid valve C.
22. Check the connector for rust, dirt, or oil, and clean or repair if necessary, then connect the connector securely.
23. Install the air cleaner (see page 11-366).
24. Install the battery base.
25. Do the battery installation procedure (see page 22-92).

A/T Clutch Pressure Control Solenoid Valve C Replacement

1. Do the battery removal procedure (see page 22-92).
2. Remove the air cleaner (see page 11-366).
3. Remove the battery base.
4. Disconnect the A/T clutch pressure control solenoid valve C connector.

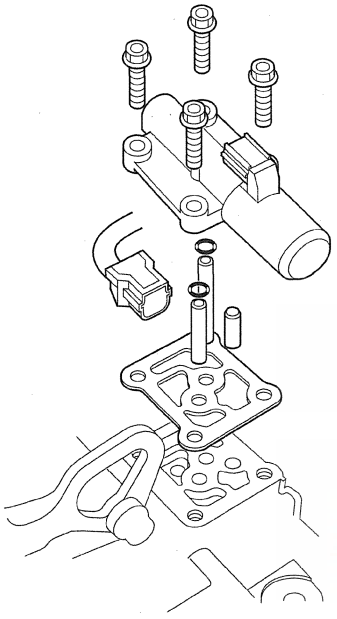

5. Remove A/T clutch pressure control solenoid valve C.
6. Remove the ATF joint pipes, O-rings, ATF pipe, and gasket.
7. Clean the mounting surfaces and the fluid passages of the solenoid valve body and transmission housing.
8. Install the 8 x 53 mm ATF joint pipe (A) with the filter end into its mounting hole (B).

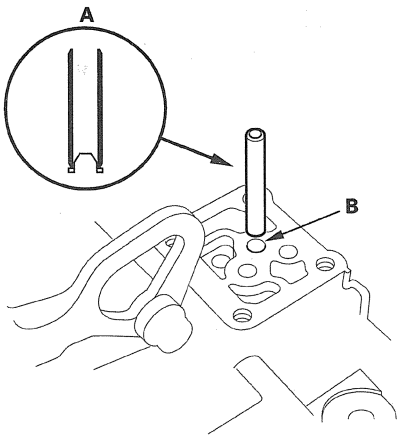

9. Check the height (A) of the 8 x 53 mm ATF joint pipe (B) between the top (C) of the pipe and solenoid valve body mounting surface (D). The height is about 7 mm (0.3 in). If the height is over 7 mm (0.3 in), push the pipe until it bottoms in the accumulator body.

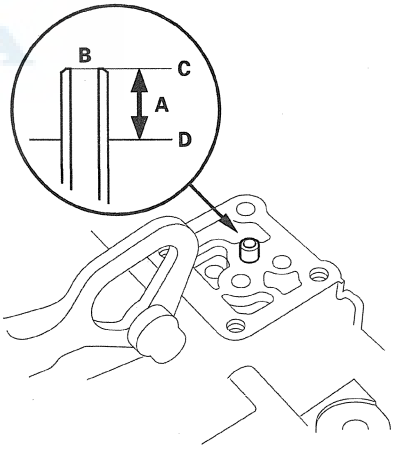

10. Install the new gasket (A) on the transmission housing, and install the 8 x 34.5 mm ATF joint pipe (B) with the filter end into the transmission housing and 8 x 25.2 mm ATF pipe (D).

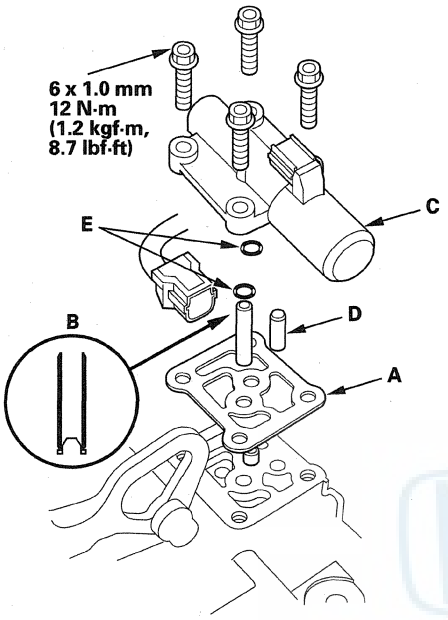

11. Install new O-rings (E) over the ATF joint pipes.
12. Install A/T clutch pressure control solenoid valve C.
13. Check the connector for rust, dirt, or oil, and clean or repair if necessary, then connect the connector securely.
14. Install the air cleaner (see page 11-366).
15. Install the battery base.
16. Do the battery installation procedure (see page 22-92).

Input Shaft (Mainshaft) Speed Sensor Replacement

1. Do the battery removal procedure (see page 22-92).
2. Remove the air cleaner (see page 11-366).
3. Remove the battery base.
4. Disconnect the input shaft (mainshaft) speed sensor connector, and remove the input shaft (mainshaft) speed sensor (A).

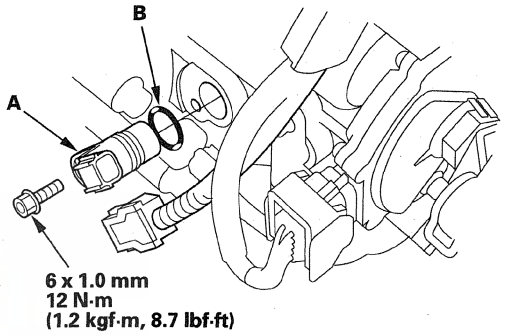

5. Install the new O-ring (B) on the new input shaft (mainshaft) speed sensor, then install the input shaft (mainshaft) speed sensor.
6. Check the connector for rust, dirt, or oil, and clean or repair if necessary, then connect the connector securely.
7. Install the battery base.
8. Install the air cleaner (see page 11-366).
9. Do the battery installation procedure (see page 22-92).

Output Shaft (Countershaft) Speed Sensor Replacement

1. Do the battery removal procedure (see page 22-92).
2. Remove the air cleaner (see page 11-366).
3. Remove the battery base.
4. Disconnect the output shaft (countershaft) speed sensor connector, and remove the output shaft (countershaft) speed sensor (A).

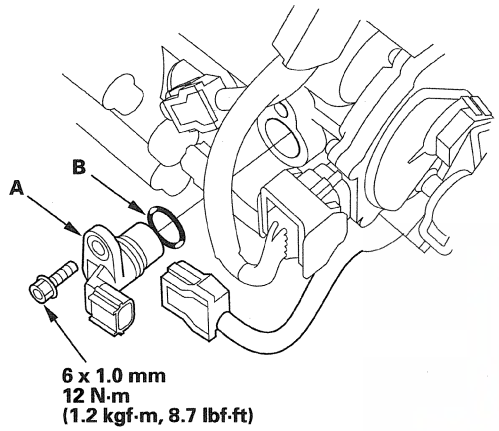

5. Install the new O-ring (B) on the new output shaft (countershaft) speed sensor, then install the output shaft (countershaft) speed sensor.
6. Check the connector for rust, dirt, or oil, and clean or repair if necessary, then connect the connector securely.
7. Install the battery base.
8. Install the air cleaner (see page 11-366).
9. Do the battery installation procedure (see page 22-92).

2nd Clutch Transmission Fluid Pressure Switch Replacement

1. Do the battery removal procedure (see page 22-92).
2. Remove the air cleaner (see page 11-366).
3. Disconnect the 2nd clutch transmission fluid pressure switch connector, and remove the switch.

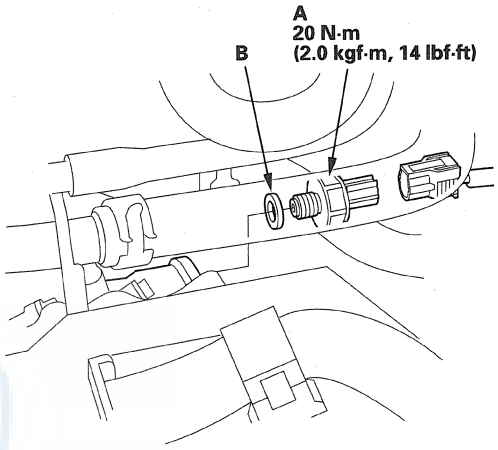

4. Install the new 2nd clutch transmission fluid pressure switch (A) and a new sealing washer (B), and tighten the switch.
5. Check the connector for rust, dirt, or oil, and clean or repair if necessary, then connect the connector securely.
6. Install the air cleaner (see page 11-366).
7. Do the battery installation procedure (see page 22-92).

3rd Clutch Transmission Fluid Pressure Switch Replacement

1. Raise the vehicle on a lift, or apply the parking brake, block both rear wheels, and raise the front of the vehicle. Make sure it is securely supported.
2. Remove the splash shield.
3. Disconnect the 3rd clutch transmission fluid pressure switch connector, and remove the 3rd clutch transmission fluid pressure switch (A).

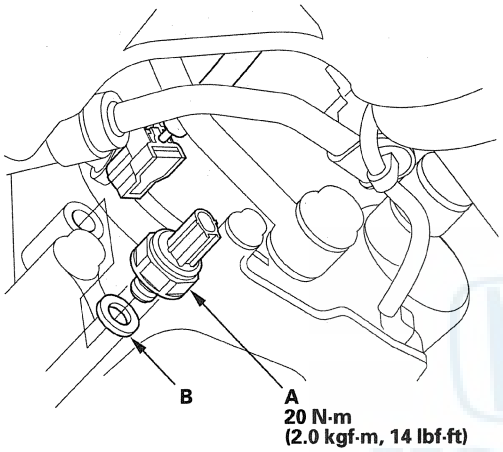

4. Install the new 3rd clutch transmission fluid pressure switch and a new sealing washer (B), and tighten the switch.
5. Check the connector for rust, dirt, or oil, and clean or repair if necessary, then connect the connector securely.
6. Install the splash shield.

4th Clutch Transmission Fluid Pressure Switch Replacement

1. Do the battery removal procedure (see page 22-92).
2. Remove the air cleaner (see page 11-366).
3. Disconnect the 4th clutch transmission fluid pressure switch connector, and remove the switch (A).

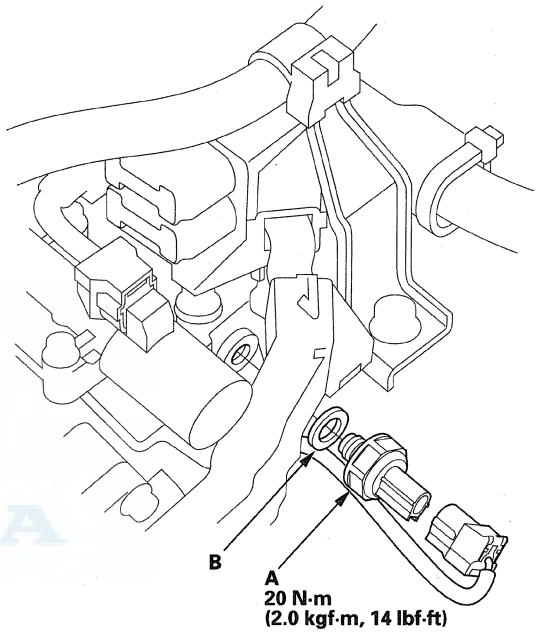

4. Install the new 4th clutch transmission fluid pressure switch and a new sealing washer (B), and tighten the switch.
5. Check the connector for rust, dirt, or oil, and clean or repair if necessary, then connect the connector securely.
6. Install the air cleaner (see page 11-366).
7. Do the battery installation procedure (see page 22-92).

ATF Temperature Sensor Replacement

1. Raise the vehicle on a lift, or apply the parking brake, block both rear wheels, and raise the front of the vehicle. Make sure it is securely supported.
2. Remove the splash shield.
3. Remove the drain plug (A), and drain the automatic transmission fluid (ATF).

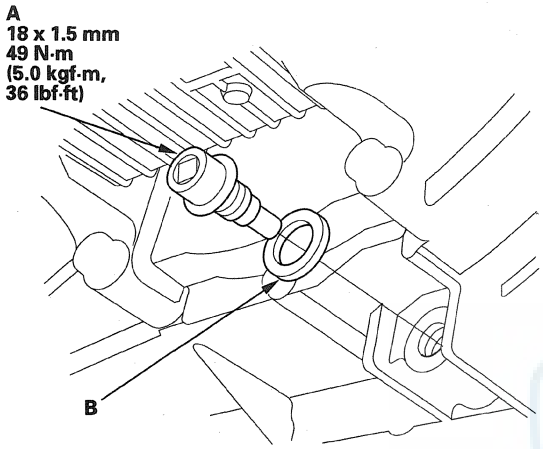

4. Reinstall the drain plug with a new sealing washer (B).
5. Disconnect the ATF temperature sensor connector (A), then remove the connector from the connector bracket (B).

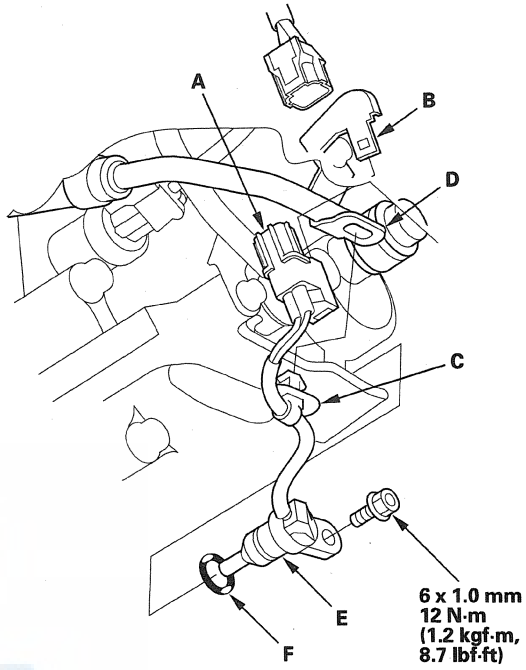

6. Remove the harness clamp (C) from its bracket (D).
7. Remove the ATF temperature sensor (E), and replace the sensor.
8. Install the new O-ring (F) on the new ATF temperature sensor, and install the ATF temperature sensor.
9. Check the connector for rust, dirt, or oil, and clean or repair if necessary. Connect the connector securely, and install it on its bracket.
10. Install the harness clamp on its bracket.
11. Refill the transmission with ATF (see step 6 on page 14-196).
12. Install the splash shield.

ATF Level Check

NOTE:
- Keep all foreign particles out of the transmission.
- Check the fluid level within 60—90 seconds after turning the engine off. Higher fluid level may be indicated if the radiator fan comes on twice or more.

1. Park the vehicle on the level ground.

2. Warm up the engine to normal operating temperature (the radiator fan comes on), and turn the engine off.

3. Remove the dipstick (yellow loop) (A) from the dipstick guide tube, and wipe it with a clean cloth.

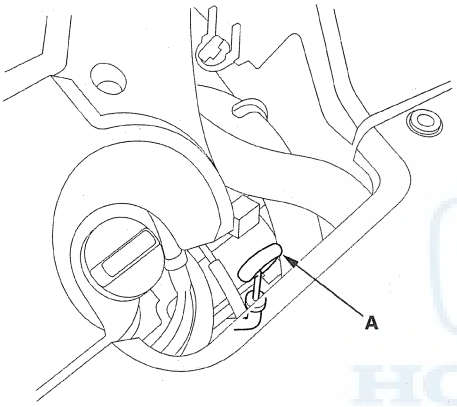

4. Insert the dipstick into the guide tube.

5. Remove the dipstick and check the fluid level. It should be between the upper mark (A) and lower mark (B).

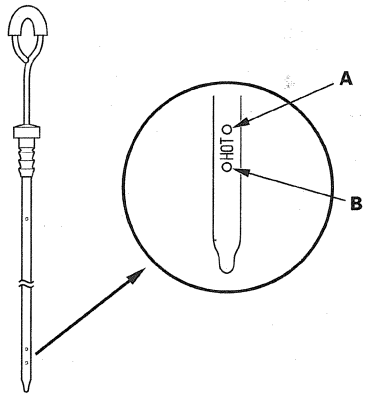

6. If the level is below the lower mark, check for fluid leaks at the transmission, and hose and line joints. If a problem is found, fix it before filling the transmission.

   NOTE: If the vehicle is driven when the ATF level is below the lower mark one or more of these symptoms may occur:
   - Transmission damage.
   - Vehicle does not move in any gear.
   - Vehicle accelerates poorly, and flares when starting off in D and R.
   - The engine vibrates at idle.

7. If the level is above the upper mark, drain the ATF to proper level (see page 14-196).

   NOTE: If the vehicle is driven when the ATF level is above the upper mark, the vehicle may creep forward while in N, or have shifting problems.

8. If necessary, fill the transmission with the recommended fluid through the filler hole (A). To bring the fluid level midway between the upper mark and lower mark of the dipstick. Do not fill past the upper mark. Always use Acura ATF-Z1 Automatic Transmission Fluid (ATF). Using a non-Acura ATF can affect shift quality.

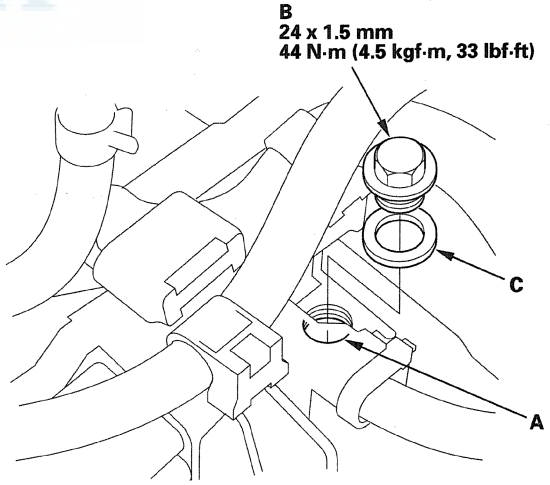

9. Install the ATF filler bolt (B) and a new sealing washer (C).

10. Insert the dipstick back into the dipstick guide tube.

11. Check the ATF level.

ATF Replacement

NOTE: Keep all foreign particles out of the transmission.

1. Warm up the engine to normal operating temperature (the radiator fan comes on), and turn the engine off.
2. Raise the vehicle on a lift, or apply the parking brake, block both rear wheels, and raise the front of the vehicle. Make sure it is securely supported.
3. Remove the splash shield.
4. Remove the ATF filler bolt and drain plug (A), and drain the automatic transmission fluid (ATF).

   NOTE: If a cooler cleaning is done, refer to ATF Cooler Cleaning (see page 14-227).

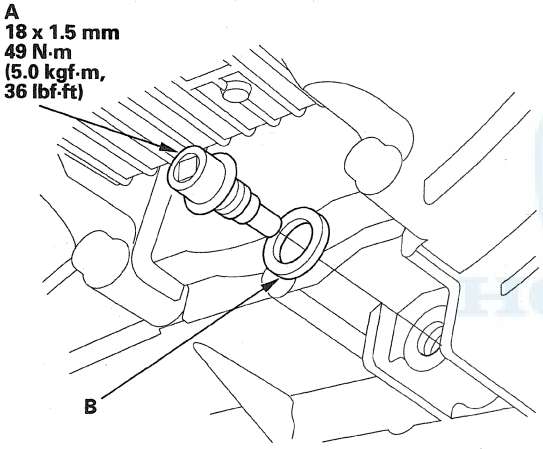

5. Reinstall the drain plug with a new sealing washer (B).
6. Refill the transmission with the recommended fluid through the filler hole (A). Always use Acura ATF-Z1 Automatic Transmission Fluid (ATF). Using a non-Acura ATF can affect shift quality.

   Automatic Transmission Fluid Capacity:
   2.8 L (3.0 US qt) at change
   7.7 L (8.1 US qt) at overhaul

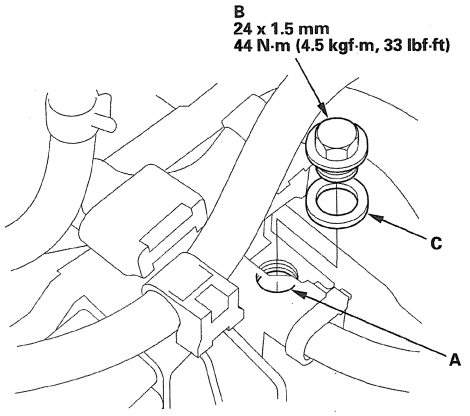

7. Install the ATF filler bolt (B) and a new sealing washer (C).
8. Check the ATF level (see page 14-195).
9. If the maintenance minder required to replace the ATF, reset the maintenance minder (see page 3-7), and this procedure is complete. If the maintenance minder did not require you to replace the ATF, go to step 10.
10. Connect the HDS to the data link connector (DLC) located under the driver's side of the dashboard.
11. Turn the ignition switch to ON (II). Make sure the HDS communicates with the PCM. If it does not, go to the DLC circuit troubleshooting (see page 11-211).
12. Select BODY ELECTRICAL with the HDS.
13. Select ADJUSTMENT in the GAUGE MENU with the HDS.
14. Select RESET in the MAINTENANCE MINDER with the HDS.
15. Select MAINTENANCE SUB ITEM 3 RESET, and reset the ATF life with the HDS.

Transfer Assembly Fluid Replacement

1. Warm up the engine to normal operating temperature (the radiator fan comes on), then turn the engine off.
2. Raise the vehicle on a lift, and make sure it is securely supported.
3. Remove the drain plug (A), and drain the transfer fluid (hypoid gear oil).

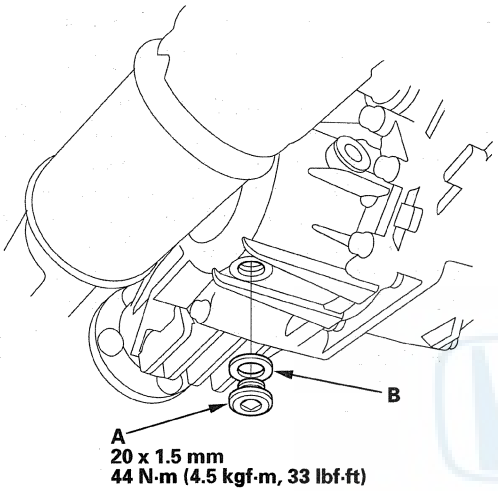

4. Reinstall the drain plug with a new sealing washer (B).
5. Remove the filler plug (A) and sealing washer (B).

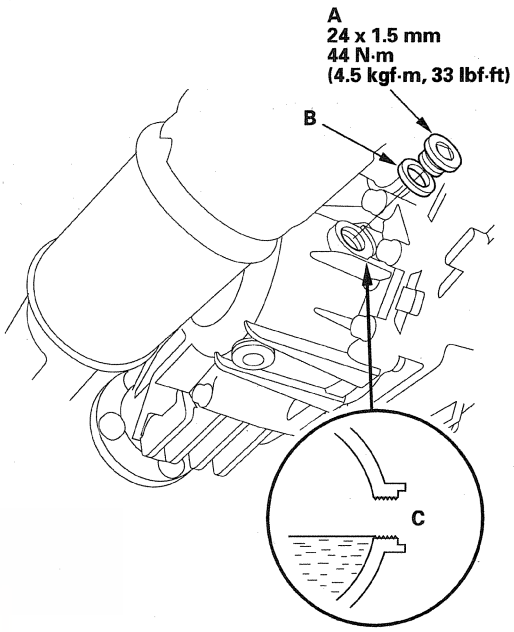

6. Refill the transfer assembly with the recommended fluid (hypoid gear oil) through the filler hole (C) until the fluid flows out. Use a SAE 90 or SAE 80W-90 viscosity hypoid gear oil, API classified GL4 or GL5 only.

   Viscosity:
   SAE 90: Above 0 °F (−18 °C)

   Transfer Fluid (Hypoid Gear Oil) Capacity:
   0.43 L (0.45 US qt) at fluid change

7. Install the filler plug with a new sealing washer.

Transfer Assembly Inspection

1. Raise the vehicle on a lift, and make sure it is supported securely.
2. Shift the transmission into N.
3. Make a reference mark (A) across the propeller shaft (B) and the transfer companion flange (C).

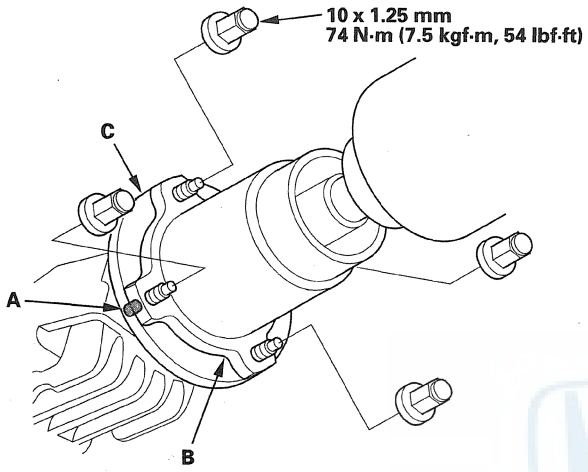

4. Separate the propeller shaft from the transfer companion flange.
5. Set a dial indicator (A) on the transfer companion flange (B); position the dial indicator tip (C) on the top of the bolt (D).

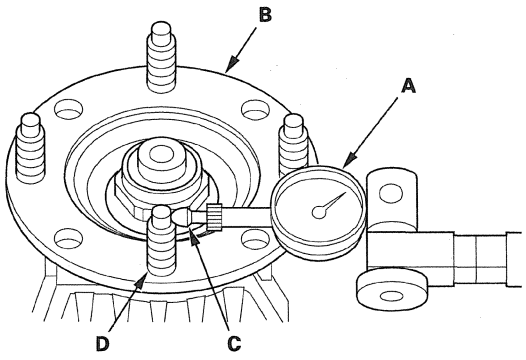

6. Measure the transfer gear backlash.

   Standard: 0.06—0.16 mm (0.002—0.006 in)

7. If the backlash is out of standard, remove the transfer assembly, and adjust the transfer gear backlash (see page 14-357).
8. Check for fluid leaks between the mating surfaces of the transfer assembly and the transmission.
9. If there is a leak, remove the transfer assembly, remove the transfer cover, and replace the O-ring.
10. Check for fluid leaks between the transfer companion flange and the transfer oil seal.
11. If there is a leak, remove the transfer assembly from the transmission, and replace the transfer oil seal and O-ring on the transfer output shaft (hypoid gear). If an oil seal and O-ring replacement is required, you will need to check and adjust the transfer gear tooth contact, the transfer gear backlash, the tapered roller bearing starting torque, and the total starting torque (see page 14-357). Do not replace the oil seal with the transfer assembly on the transmission.

Transfer Assembly Removal

1. Raise the vehicle on a lift, and make sure it is supported securely.
2. Shift the transmission into N.
3. Remove the drain plug (A), and drain the automatic transmission fluid (ATF).

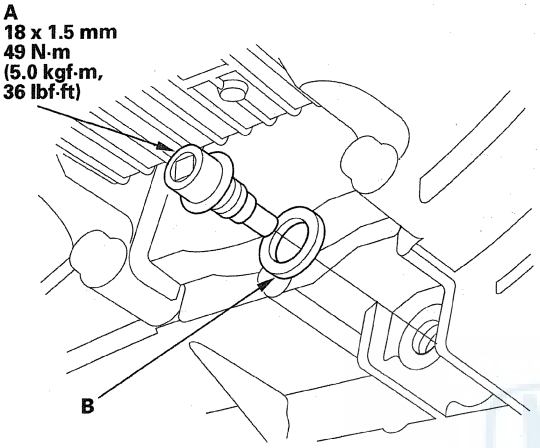

4. Reinstall the drain plug with a new sealing washer (B).
5. Remove exhaust pipe A.

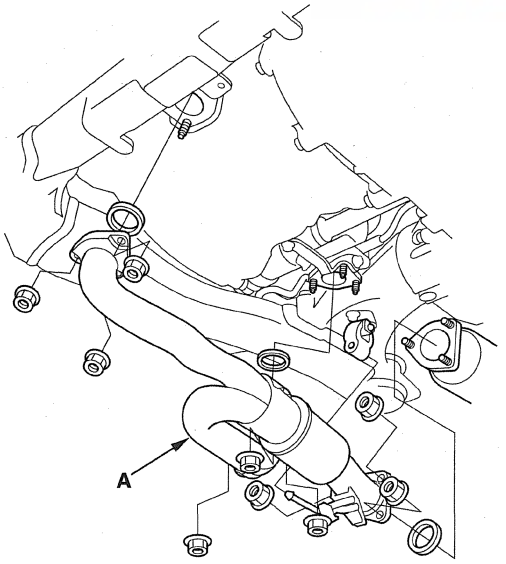

6. Remove the bolt securing the transfer breather hose bracket (A), and disconnect the breather hose (B) from the breather pipe (C) on the transfer assembly.

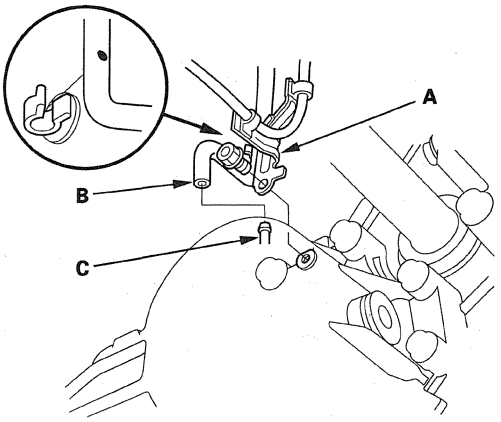

7. Make a reference mark (A) across the propeller shaft (B) and the transfer companion flange (C).

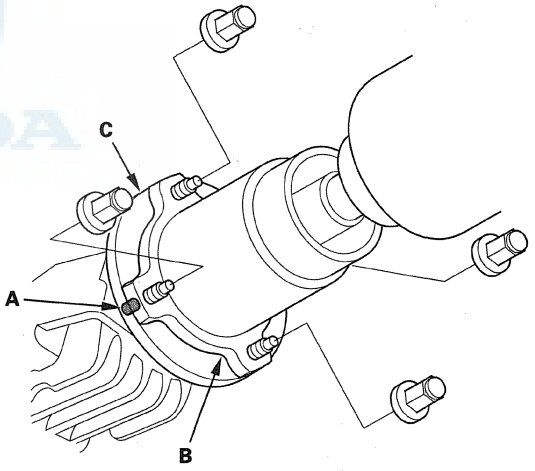

8. Separate the propeller shaft from the transfer companion flange.

(cont'd)

Transfer Assembly Removal (cont'd)

9. Remove the transfer assembly from the transmission.

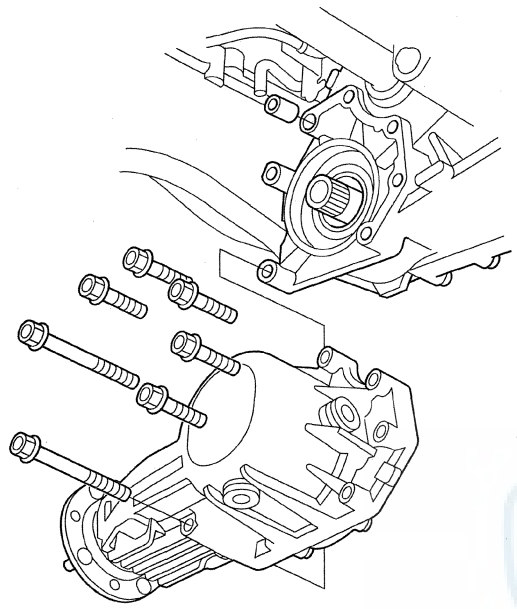

Transfer Assembly Installation

1. Clean the areas where the transfer assembly contacts the transmission with solvent, and dry with compressed air. Then apply transmission fluid to the contact area.

2. Install the dowel pin (A) in the transmission, and install the transfer assembly (B) on the transmission.

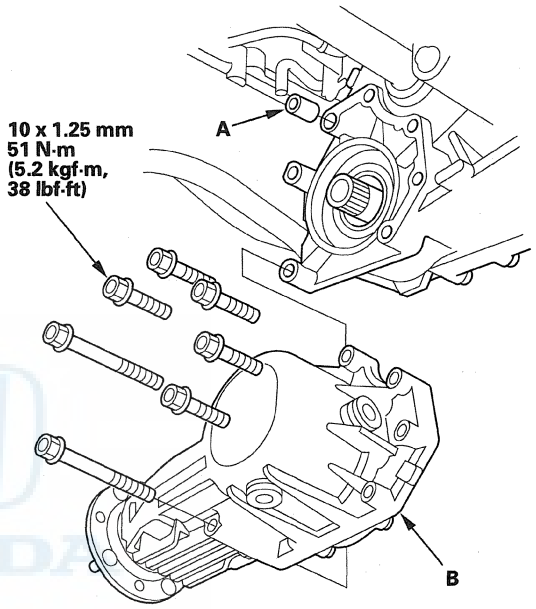

3. Install the propeller shaft (A) to the transfer companion flange (B) by aligning the reference mark (C).

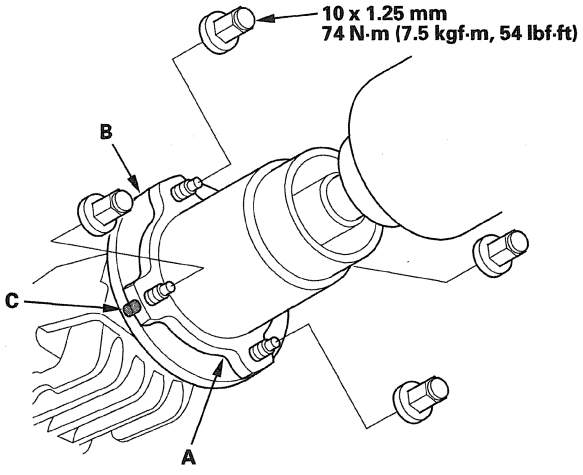

4. Secure the transfer breather tube bracket (A) on the transfer assembly with the bolt, and install the breather tube (B) over the breather pipe (C). If the breather tube was removed from the clamp, install the tube at the dot (D) on the clamp (E).

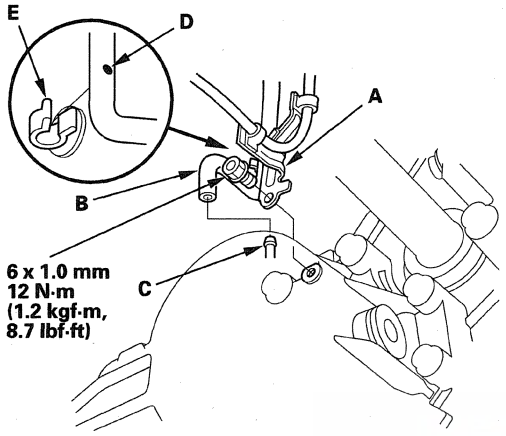

5. Install exhaust pipe A with the new self-locking nuts and new gaskets (B) (C).

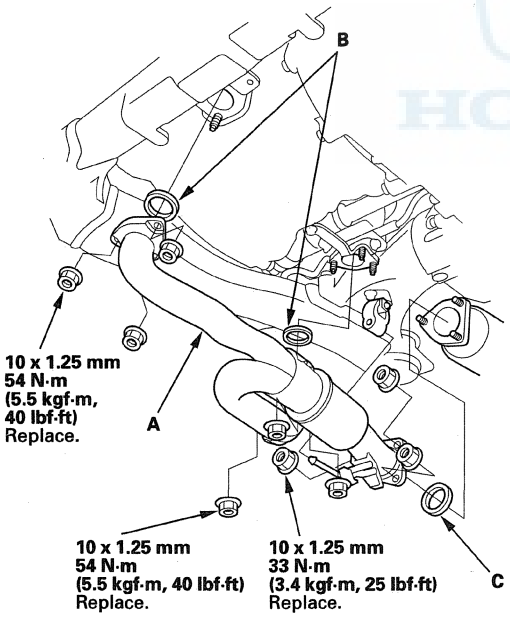

6. Refill the transfer assembly with the transfer fluid (hypoid gear oil), if necessary (see page 14-197).

7. Refill the transmission with ATF (see step 6 on page 14-196).

Transmission Removal

Special Tools Required
- Engine support hanger, A and Reds AAR-T1256 *
- 2008 V6 Attachment arm SIL02C00033
- Engine hanger balancer bar VSB02C000019 *
- Front subframe adapter VSB02C000016 *

* : Available through the Acura Tool and Equipment Program 888-424-6857.

NOTE:
- Use fender covers to avoid damaging painted surfaces.
- Special tool Reds engine support hanger AAR-T1256 must be used with the side engine mount installed.

1. Remove the covers in the following order; battery trim (A), upper grille cover (B), right upper fender trim (C), left upper fender trim (D), cowl cover upper trim (E), and intake manifold cover (F).

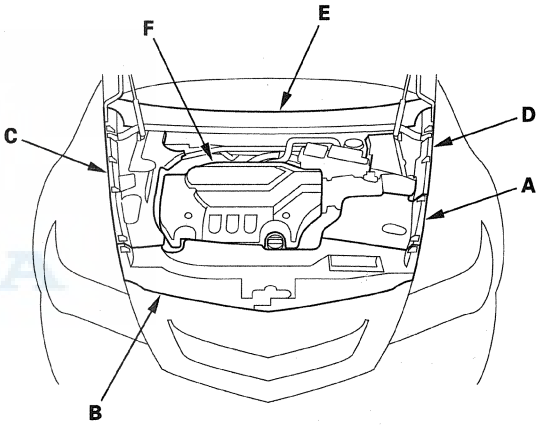

2. Remove the passenger's side windshield wiper arm (see page 22-386).

(cont'd)

Transmission Removal (cont'd)

3. Disconnect the support strut from the pivot ball on both sides of the hood. Raise and secure the hood in a vertical position. Remove the right side pivot ball and install it into the lower threaded hole, then reattach the support strut.

   NOTE: Do not attempt to close the hood with the support strut in the vertical position; it will damage the support strut and the hood.

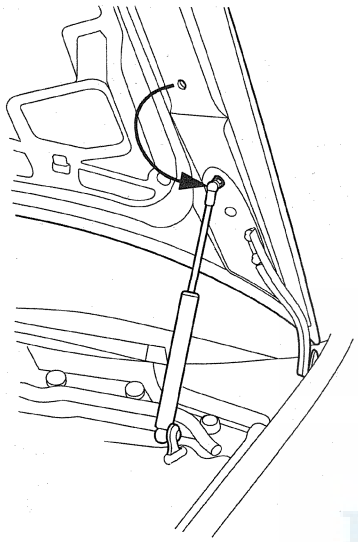

4. Set the wheels in the straight ahead position, and lock the steering wheel.
5. Drain the power steering system fluid from the reservoir (see page 17-13).
6. Do the battery removal procedure (see page 22-92).
7. Remove the air cleaner (see page 11-366).
8. Remove the battery base.
9. Raise the vehicle on a lift, and make sure it is supported securely.
10. Remove the front wheels.
11. Remove the splash shield.
12. Remove the drain plug (A), and drain the automatic transmission fluid (ATF).

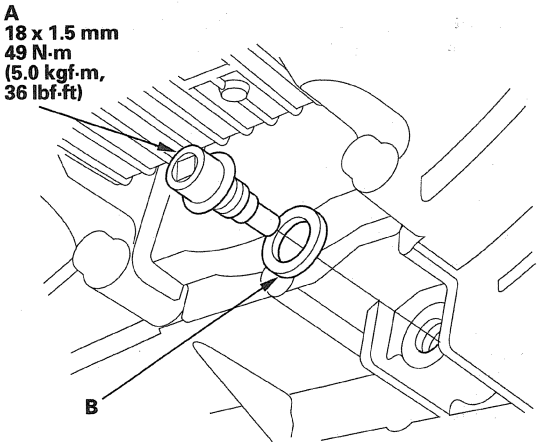

13. Reinstall the drain plug with a new sealing washer (B).
14. Remove the bolts (A) securing the under-hood fuse/relay box.

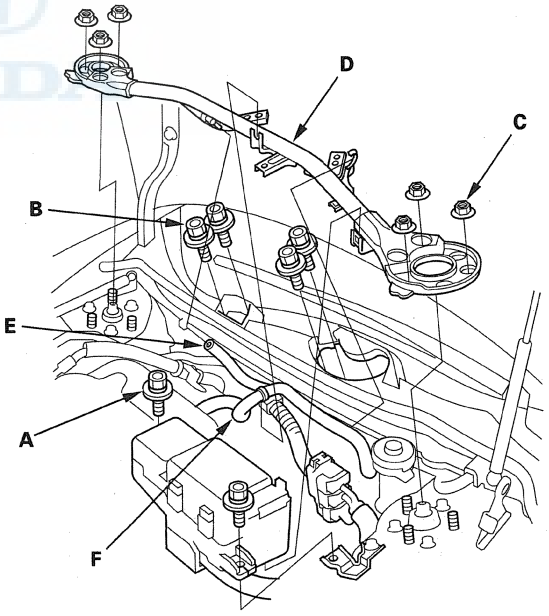

15. Remove the bolts (B) and nuts (C) securing the strut brace (D).
16. Remove the breather tube end (E) and vacuum hose (F), then remove the strut brace.

17. Disconnect the steering joint (see page 17-25).

18. Remove the power steering pump outlet line (A) from the power steering pump, and remove the bolt (B) securing the hose clamp bracket (C).

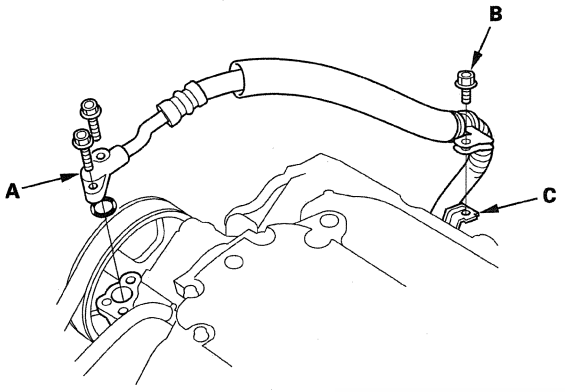

19. Disconnect the power steering pressure switch connector.

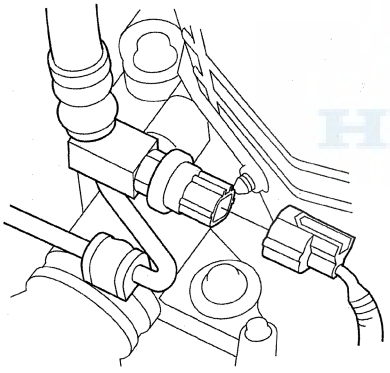

20. Remove the starter cables (A) from the starter, and remove the harness clamp (B) from the clamp bracket (C).

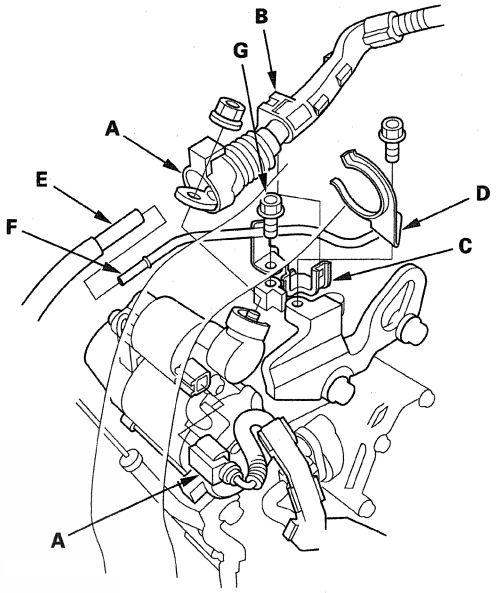

21. Remove the bolt securing the radiator hose clamp (D).

22. Disconnect the vacuum hose (E) from the vacuum line (F), and remove the vacuum line bolt (G).

23. Remove the starter and gasket from the transmission.

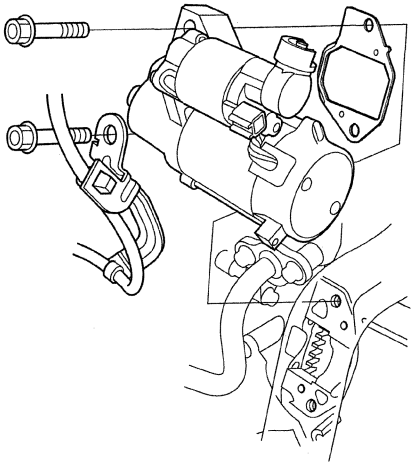

(cont'd)

Transmission Removal (cont'd)

24. Remove the nuts securing the shift cable bracket (A).

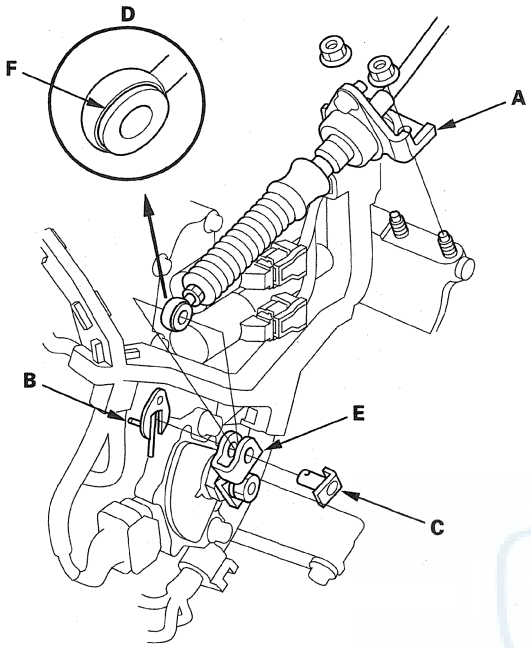

25. Remove the spring clip/washer (B) and control pin (C), then separate the shift cable end (D) from the control lever (E).

26. Check the bushing (F) in the shift cable end for a proper fit and wear. If the bushing is loose or worn, replace the shift cable (see page 14-235).

27. Disconnect A/T clutch pressure control solenoid valve A connector, A/T clutch pressure control solenoid valve B connector, 4th clutch transmission fluid pressure switch connector (C), and shift solenoid harness connector (D).

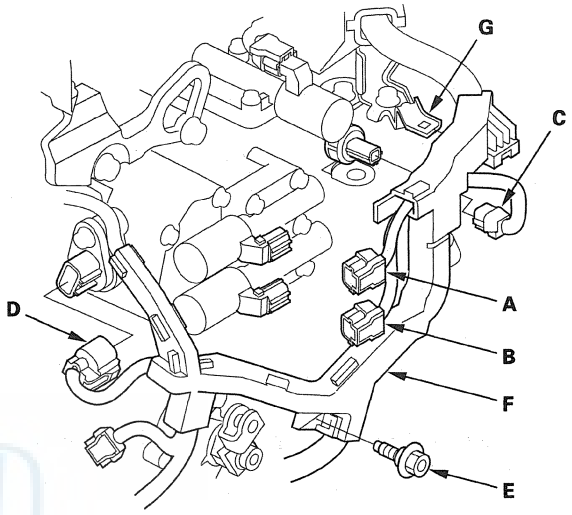

28. Remove the harness cover mounting bolt (E), and remove the harness cover (F) from its bracket (G).

29. Remove the harness cover mounting bolt (A), and remove the harness clamps (B) from the clamp brackets (C). Remove the harness clamp bracket (D).

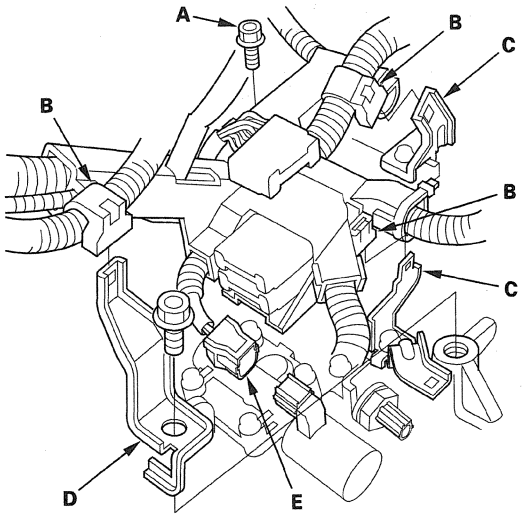

30. Disconnect A/T clutch pressure control solenoid valve C connector (E).

31. Disconnect the transmission range switch connector (A) and input shaft (mainshaft) speed sensor connector (B).

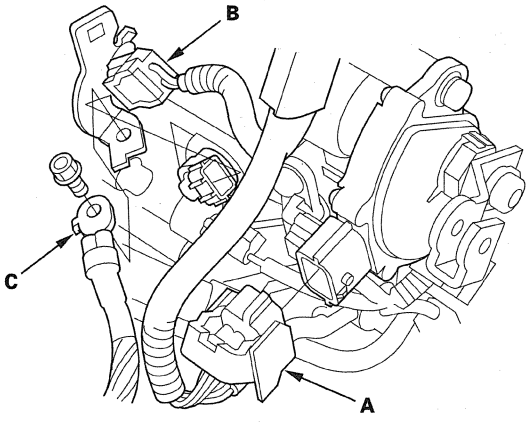

32. Remove the transmission ground cable (C).

33. Disconnect the output shaft (countershaft) speed sensor connector (A), 3rd clutch transmission fluid pressure switch connector (B), and ATF temperature sensor connector (C), and remove the harness clamp (D) from the clamp bracket (E).

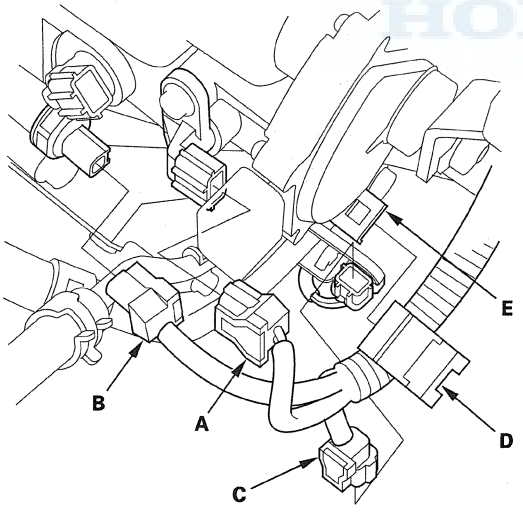

34. Disconnect the 2nd clutch transmission fluid pressure switch connector (A), and remove the vacuum line bolt (B).

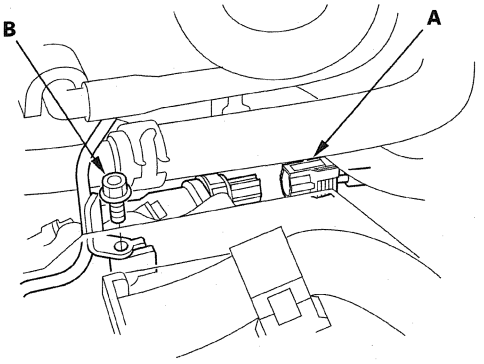

35. Disconnect the ATF cooler hoses (A) from the ATF cooler lines (B). Turn the ends of the cooler hoses up to prevent ATF from flowing out, then plug the cooler hoses and lines.

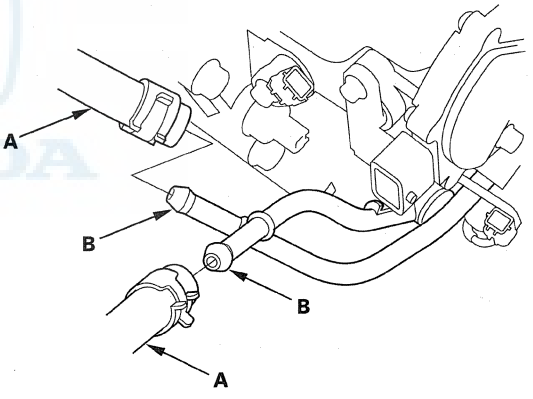

36. Check for any signs of leakage at the hose joints.

(cont'd)

Transmission Removal (cont'd)

37. Remove the connector bracket from the front cylinder head; use the bracket bolt hole to attach engine hanger balancer bar front arm.

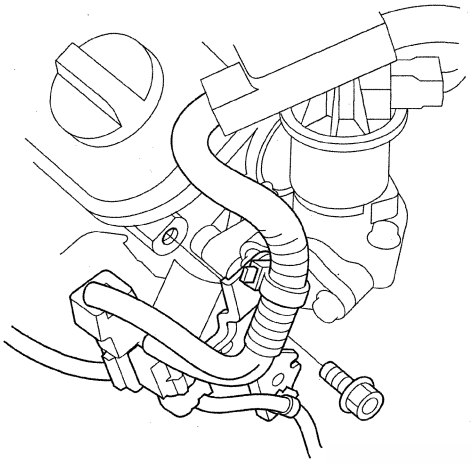

38. Disconnect the solenoid connector, disconnect the vacuum tube from the joint, then remove the bracket from the rear cylinder head; use the bracket bolt hole to attach the 2008 V6 attachment arm (SIL02C000033).

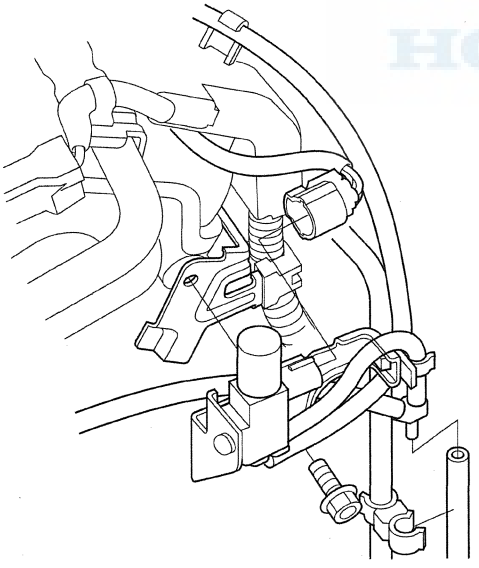

39. Install the engine balancer bar (VSB02C000019); attach the front arm (A) to the front cylinder head with some spacers (B) and the 10 x 1.25 mm bolt (C). Attach the 2008 V6 attachment arm (SIL02C000033) to the rear cylinder head and the 8 x 1.25 mm bolt (D), then attach the rear arm to the 2008 V6 attachment arm.

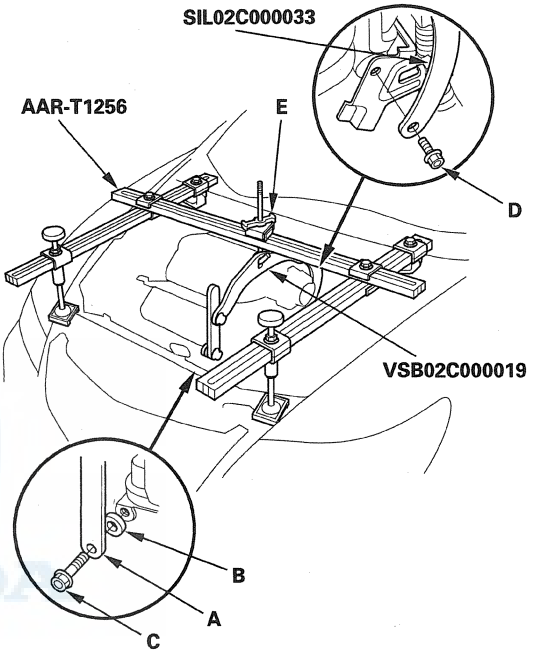

40. Install the engine support hanger (AAR-T1256) to the vehicle, and attach the hook to the engine balancer bar slot. Tighten the wing nut (E) by hand, and lift and support the engine.

41. Remove the front mount stop (A) and front mount bolt (B).

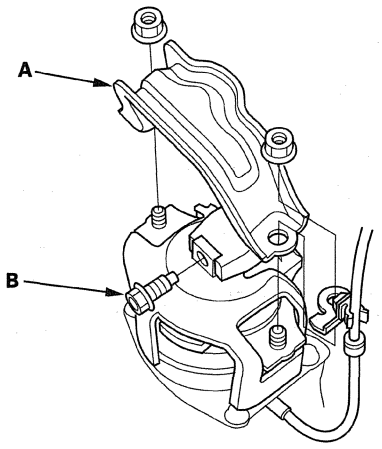

42. Remove exhaust pipe A.

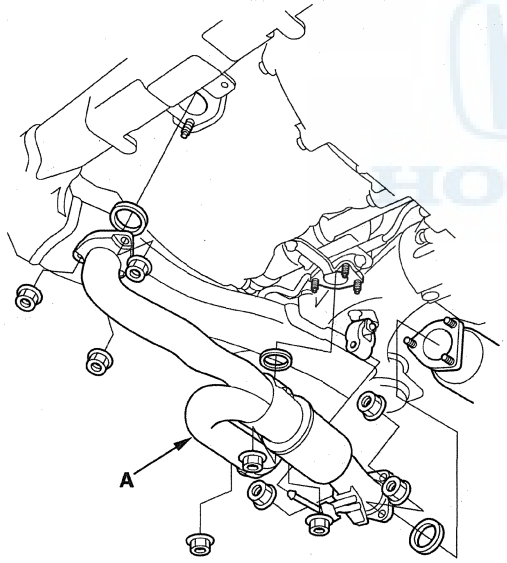

43. Make a reference mark (A) across the propeller shaft (B) and the transfer companion flange (C).

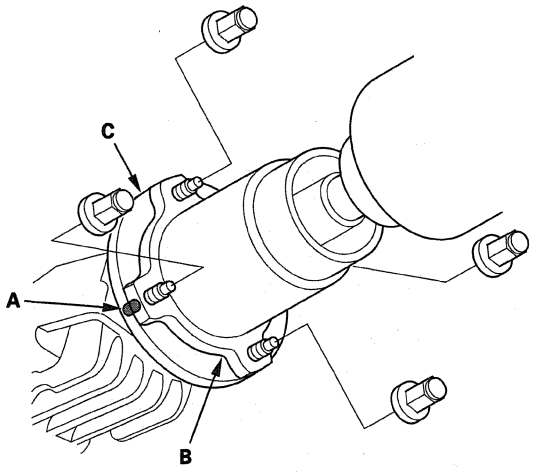

44. Separate the propeller shaft from the transfer companion flange.

45. Remove the propeller shaft (see page 16-44).

(cont'd)

Transmission Removal (cont'd)

46. Insert a 6 mm Allen wrench (A) in the top of the ball joint pin (B), and remove the nuts (C), then separate the stabilizer link (D) from the lower arms (E).

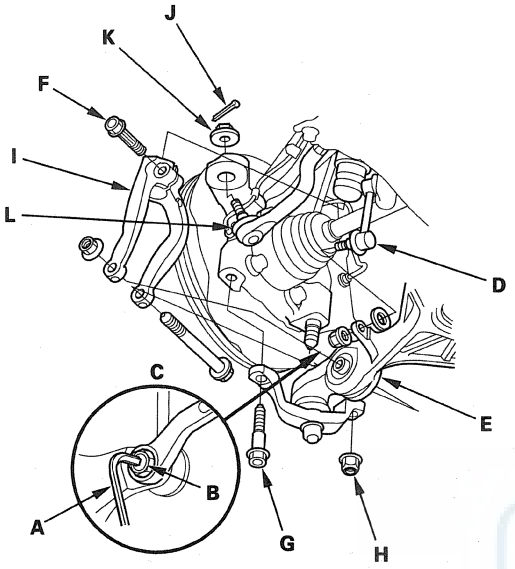

47. Remove the damper pinch bolts (F), damper fork bolts and self-locking nuts, knuckle holder bolts (G) and nuts (H). Remove the damper forks (I).

48. Remove the cotter pins (J) and nuts (K), and separate the steering tie-rod end ball joints (L) from the knuckle (see step 14 on page 17-36).

49. Remove the bolt securing the transfer breather tube bracket (A), and disconnect the breather tube (B) from the breather pipe (C) on the transfer assembly.

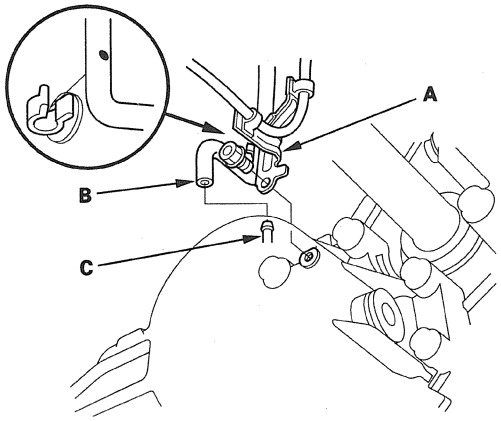

50. Remove the transfer assembly from the transmission.

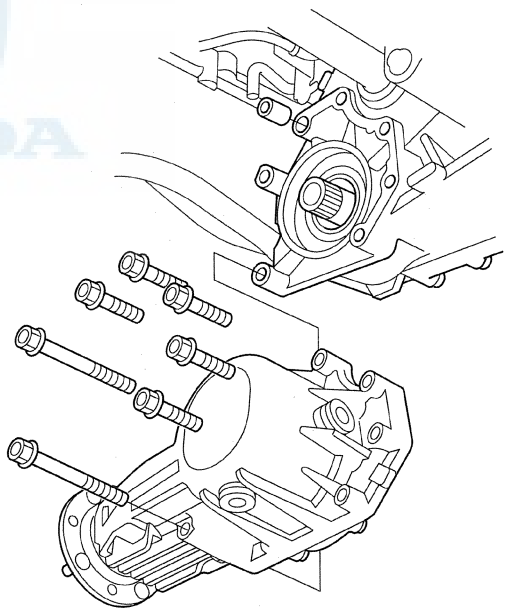

51. Remove the steering gearbox heat shield.

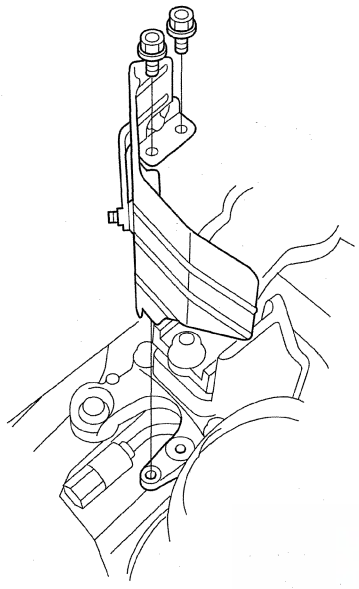

52. Loosen the hose clamp bolt, then disconnect the power steering fluid hose (A) from the line at the right front of the subframe.

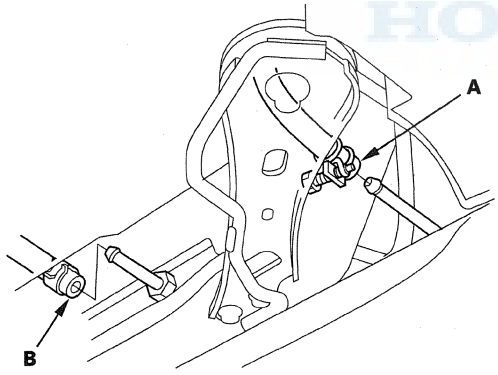

53. Disconnect the ATF cooler hose (B) from the ATF cooler. Turn the end of the cooler hose up to prevent ATF from flowing out, then plug the hose.

54. Remove the torque converter cover (A), and remove the drive plate bolts (B) (8) while rotating the crankshaft pulley.

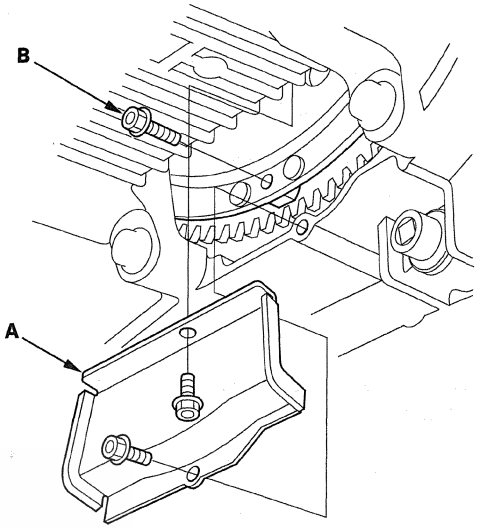

55. Remove the transmission lower mount bolts.

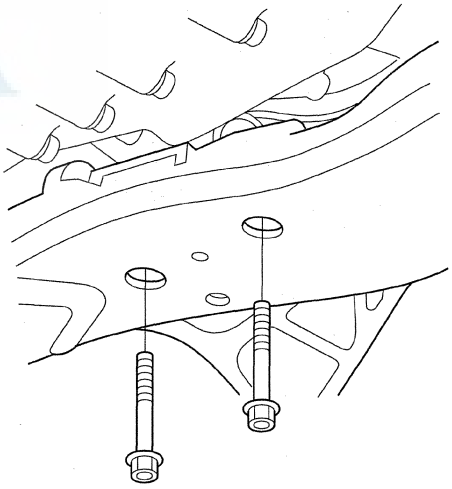

(cont'd)

Transmission Removal (cont'd)

56. Disconnect the power steering angle sensor connector.

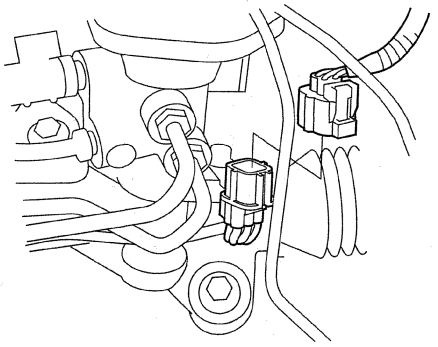

57. Remove the shift cable bracket on the steering gearbox stiffener.

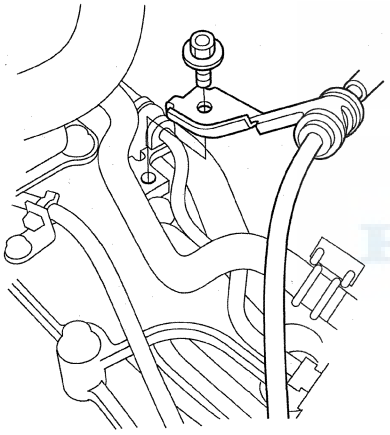

58. Remove the rear mount stop (A), and remove the rear mount bolt (B).

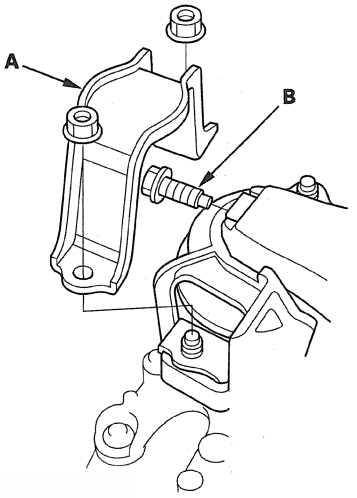

59. Attach the front subframe adapter (VSB02C000016) to the subframe by looping the belt over the front of the subframe, then secure the belt with its stop.

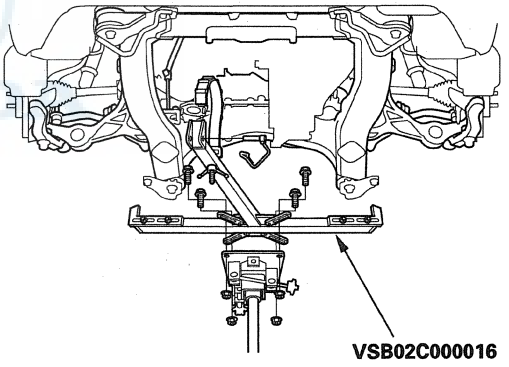

60. Raise the jack and line up the slots in the arms with the bolt holes on the corner of the jack base, then attach them with bolts.

61. Remove the four bolts securing the stiffeners (A) and the four bolts securing the front subframe (B), and lower the front subframe.

NOTE: Check that the front subframe is free of the vacuum hose, the ATF cooler hoses, and the electrical wiring.

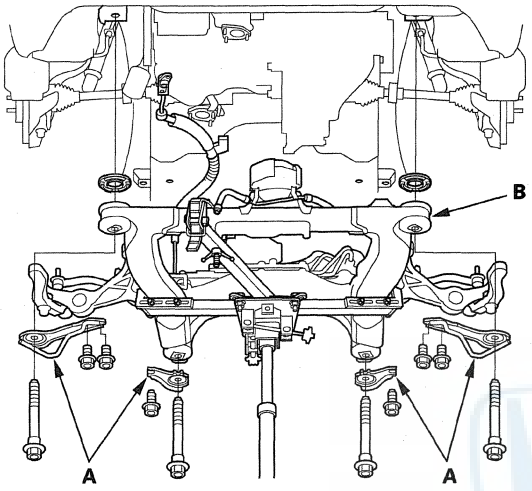

62. Remove the transmission lower mount.

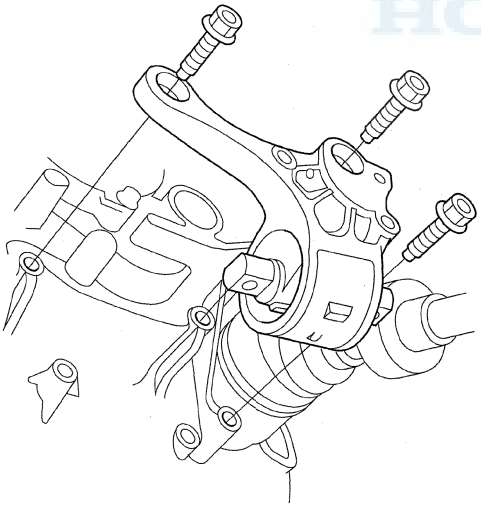

63. Pry out the driveshafts from the differential and the intermediate shaft.

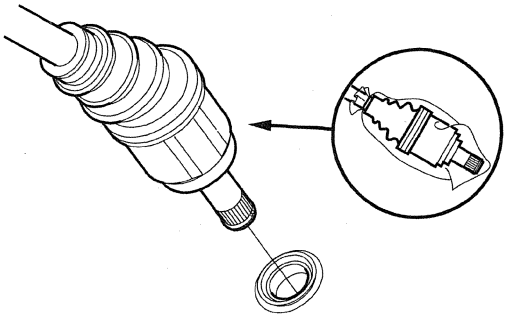

64. Remove the exhaust manifold bracket and heat shield.

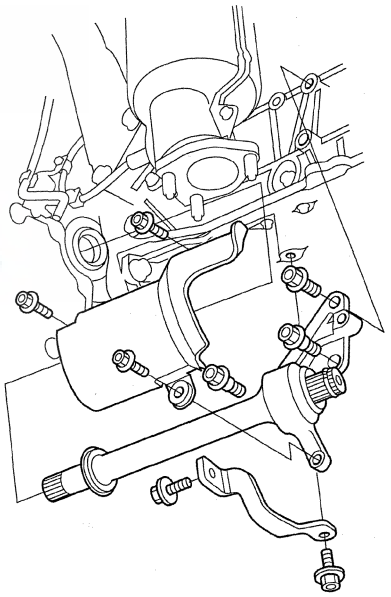

65. Remove the intermediate shaft.

66. Coat all precision finished surfaces with clean engine oil, then the plastic bags over driveshaft ends and intermediate shaft ends.

(cont'd)

Transmission Removal (cont'd)

67. Remove the upper transmission housing mounting bolts.

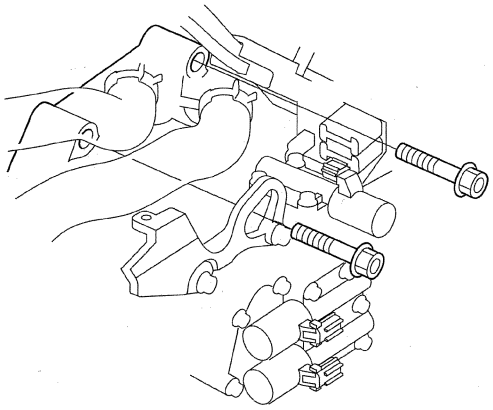

68. Remove the front mount bracket (A).

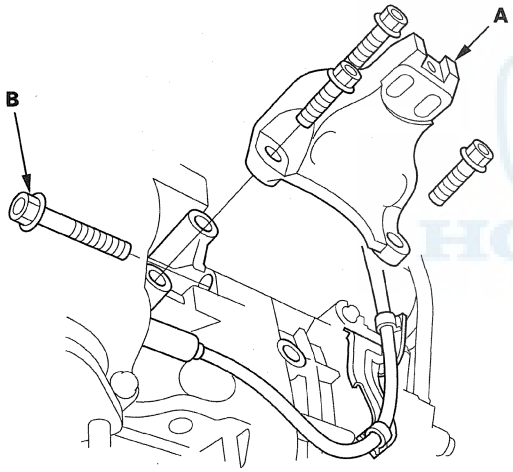

69. Remove the front transmission housing mounting bolt (B) using a socket 22 mm long.

70. Remove the rear transmission housing mounting bolts.

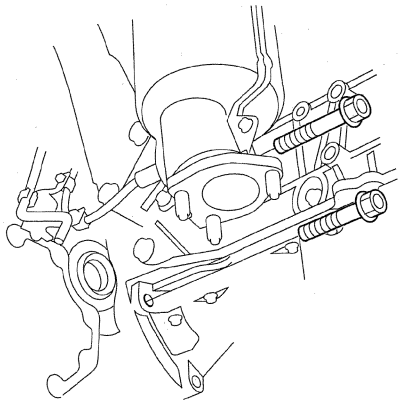

71. Lower the transmission by loosening the wing nut of the engine support hanger, and tilt the engine just enough for the transmission end to clear the side frame.

72. Place a jack under the transmission.

73. Remove the lower transmission housing mounting bolts.

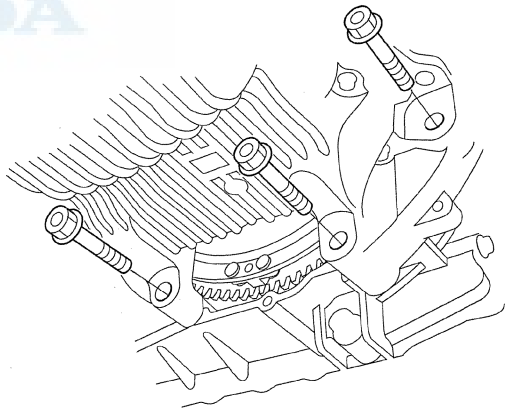

74. Slide the transmission away from the engine to remove it from the vehicle.

75. Remove the torque converter and dowel pins.

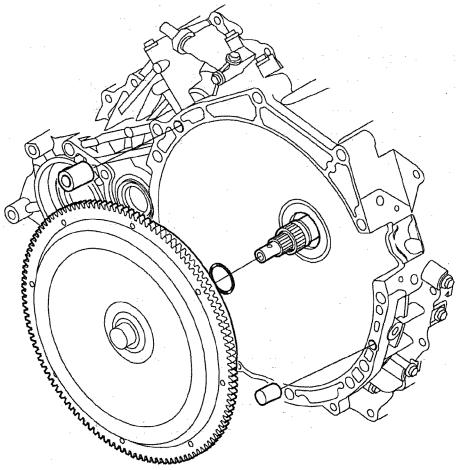

76. Remove the clamp bracket from the transmission.

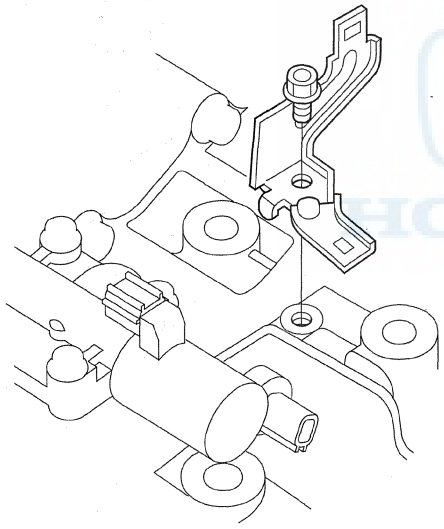

77. Remove the harness clamp bracket from the transmission.

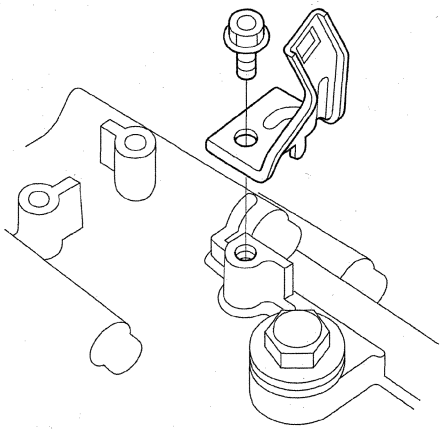

78. Inspect the drive plate, and replace if it's damaged (see page 14-214).

Drive Plate Removal and Installation

1. Remove the transmission assembly (see page 14-201).

2. Remove the drive plate (A) and washer (B) from the engine crankshaft.

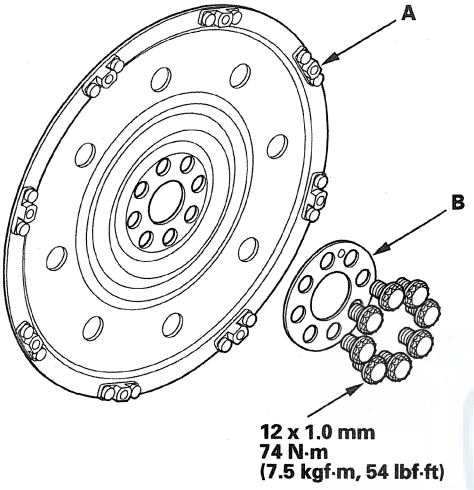

3. Install the drive plate and washer on the engine crankshaft, and tighten the eight bolts in a crisscross pattern in two or more steps.

4. Install the transmission assembly (see page 14-214).

Transmission Installation

Special Tools Required
- Subframe alignment pin 070AG-SJAA10S
- 2008 V6 Attachment arm SIL02C000033
- Engine support hanger, A and Reds AAR-T1256 *
- Engine hanger balancer bar VSB02C000019 *
- Front subframe adapter VSB02C000016 *

* : Available through the Acura Tool and Equipment Program 888-424-6857.

NOTE: Use fender covers to avoid damaging painted surfaces.

1. Clean the ATF cooler (see page 14-227).

2. Install the harness clamp bracket.

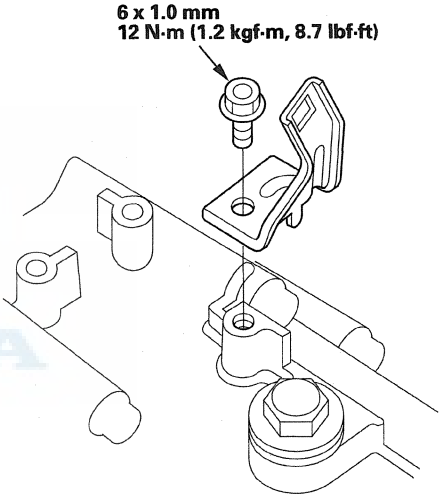

3. Install the clamp bracket.

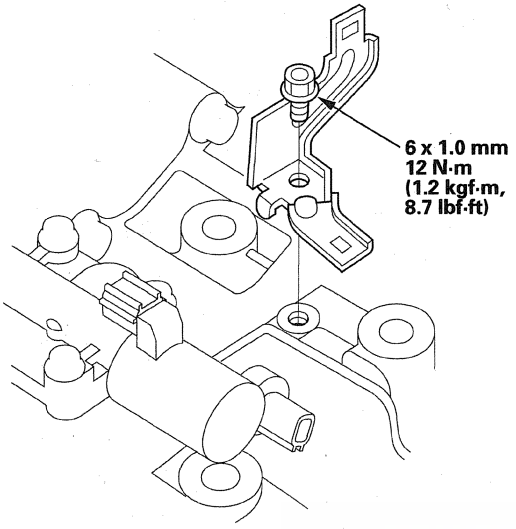

4. Install the torque converter (A) on the mainshaft (B) with the new O-ring (C).

   NOTE: Make sure the torque converter is fully engaged on the mainshaft, starter shaft and the ATF pump gear. Failure to do so will result in severe transmission or engine damage.

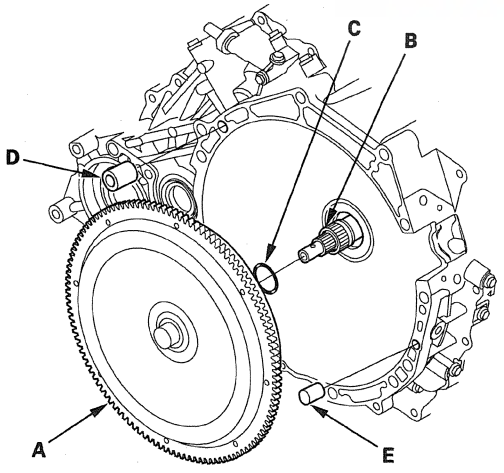

5. Install the 14 mm dowel pin (D) and 10 mm dowel pin (E) in the torque converter housing.

6. Install the transmission lower mount with the new bolts.

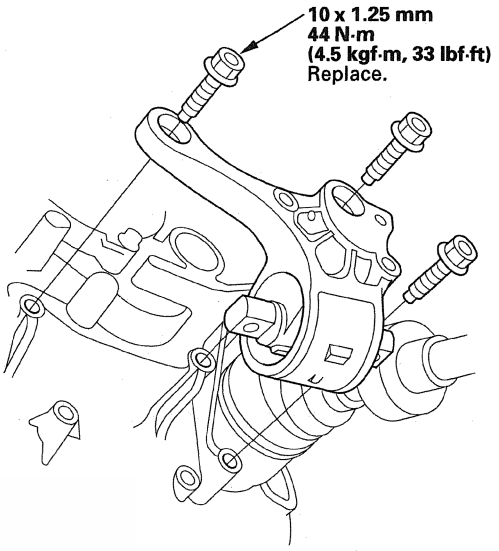

7. Place the transmission on the jack, and raise it to engine level.

8. Attach the transmission to the engine, and install the lower transmission housing mounting bolts.

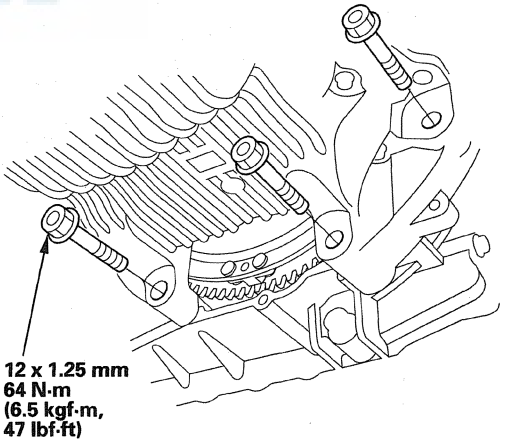

(cont'd)

Transmission Installation (cont'd)

9. Install the transmission housing mounting bolts.

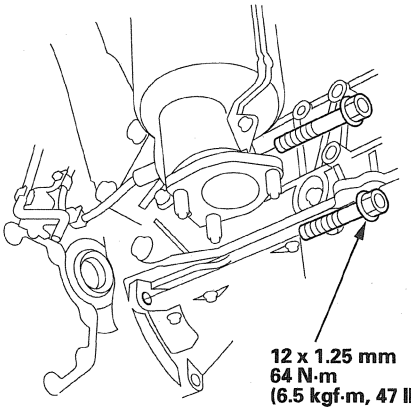

10. Install the upper transmission housing mounting bolts.

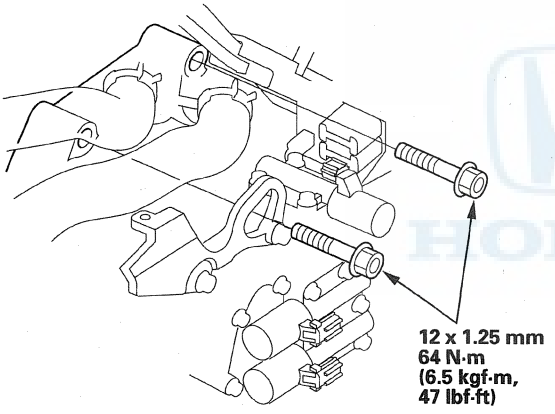

11. Install the front transmission housing mounting bolt (A) with a socket 22 mm long and a torque wrench.

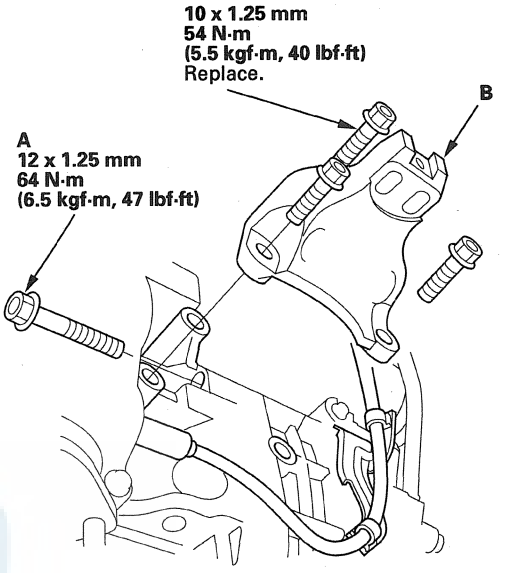

12. Install the front mount bracket (B) with the new mounting bolts.

13. Install the new set ring (A) on the intermediate shaft (B).

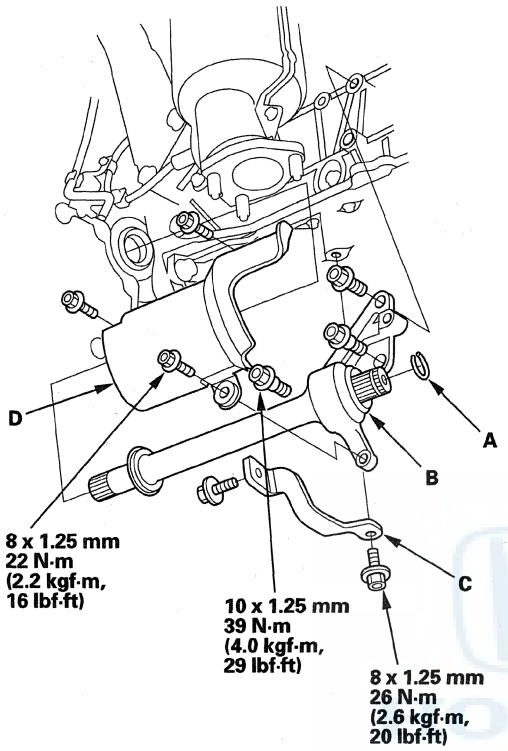

14. Clean the areas where the intermediate shaft contacts the transmission (differential) with solvent, and dry with compressed air. Apply ATF to the intermediate shaft splines, then install the intermediate shaft; be sure not to allow dust or other foreign particles to enter the transmission.

15. Install the exhaust manifold bracket (C) and heat shield (D).

16. Install the new set ring (A) on the left driveshaft (B).

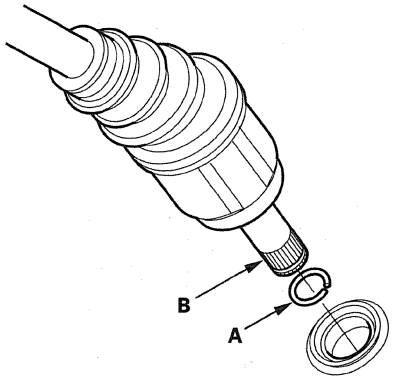

17. Clean the areas where the left driveshaft contacts the transmission (differential) with solvent, and dry with compressed air. Then install the left driveshaft; be sure not to allow dust or other foreign particles to enter the transmission. Turn the steering knuckle fully outward, and slide the driveshaft into the differential until you feel its set ring fully engage the side gear.

18. Apply right driveshaft inboard-joint splines with the recommended grease.

19. Slide the right driveshaft over the intermediate shaft splines until you feel the driveshaft fully engage the intermediate shaft set ring.

(cont'd)

Transmission Installation (cont'd)

20. Install the front subframe stop rubbers (A) on the front of the subframe (B), and support the front subframe with the front subframe adapter (VSB02C000016) and a jack, and lift it up to body.

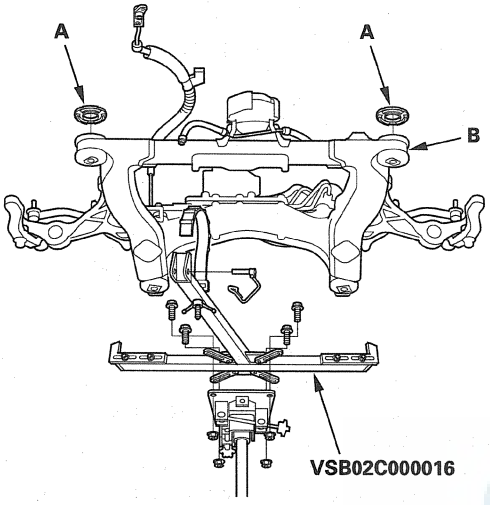

21. Loosely install the new subframe mounting bolts (A), rear stiffener mounting bolts (B), front stiffener mounting bolts (C), and front and rear stiffeners.

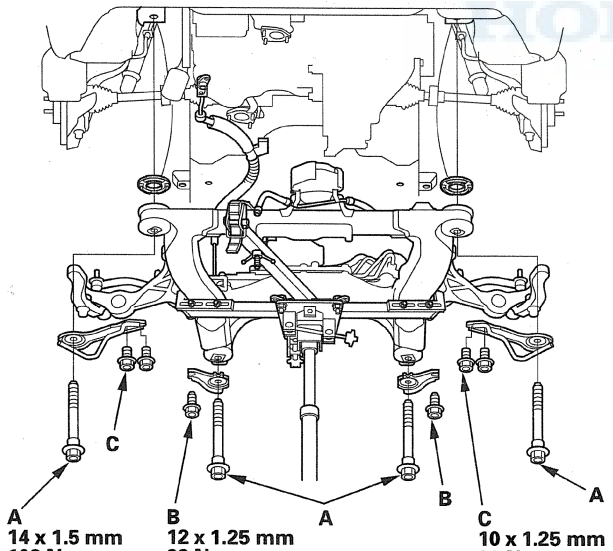

22. Partially tighten the right rear subframe mounting bolt (A); insert the special tool through the positioning slot (B) on the rear stiffener, through the positioning hole (C) on the subframe, and into the positioning hole (D) on the body, then tighten the subframe mounting bolt.

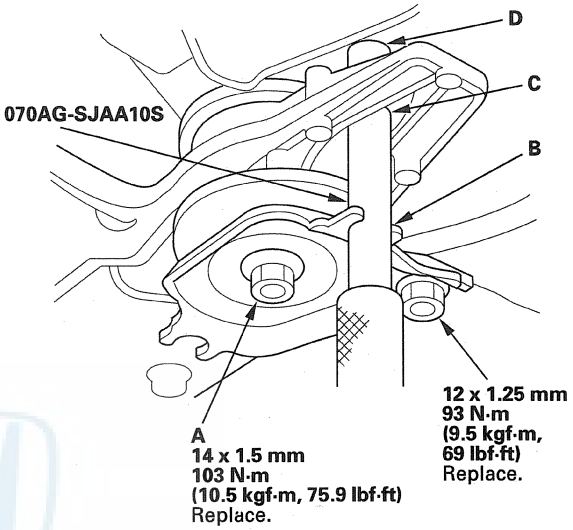

23. Partially tighten the left rear subframe mounting bolt in the same manner in step 22.

24. Partially tighten the right and left front subframe mounting bolts.

25. Loosen the right rear mounting bolt, then tighten the bolt to the specified torque with the special tool in the positioning hole.

26. Tighten the left rear mounting bolt to the specified torque with the special tool in the positioning hole.

27. Tighten the right and left front mounting bolts to the specified torque.

28. Check that the positioning holes and slot are aligned using the special tool.

29. Tighten the rear and front stiffener mounting bolts to the specified torque.

30. Remove the jack and front subframe adapter.

31. Install the new transmission lower mount bolts.

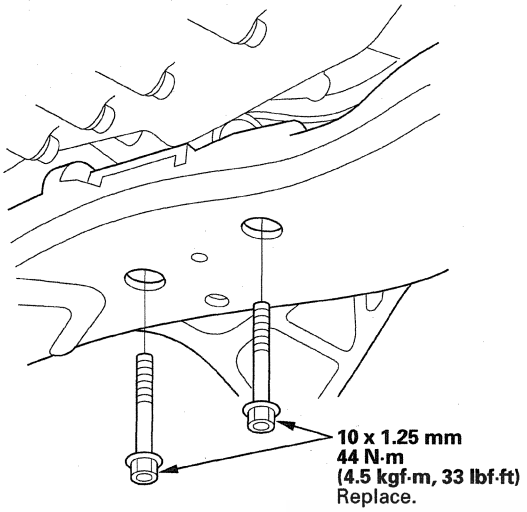

32. Attach the torque converter to the drive plate (A) with eight bolts (B). Rotate the crankshaft pulley as necessary to tighten the bolts to half of the specified torque, then to the final torque, in a crisscross pattern. After tightening the last bolt, check that the crankshaft rotates freely.

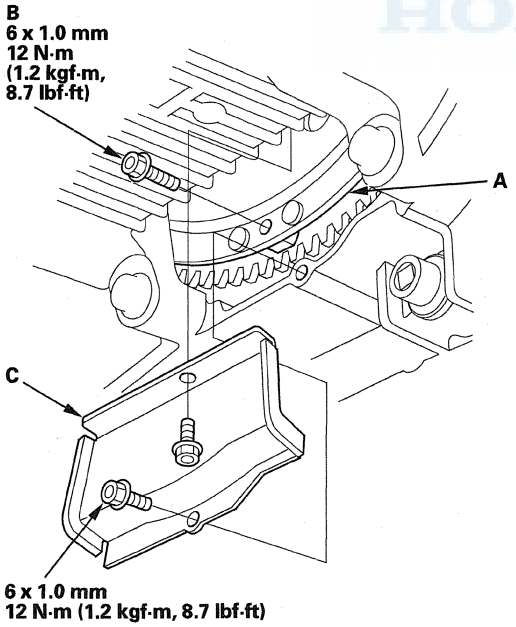

33. Install the torque converter cover (C).

34. Connect the power steering fluid hose (A) to the line (B) at the right front of the front subframe, and secure the hose with its hose clamp (C).

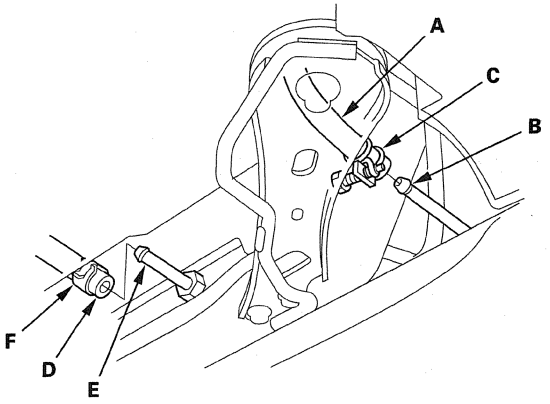

35. Connect the ATF cooler hose (D) to the ATF cooler (E), and secure the hose with the clip (F) (see page 14-229).

36. Install the steering gearbox heat shield.

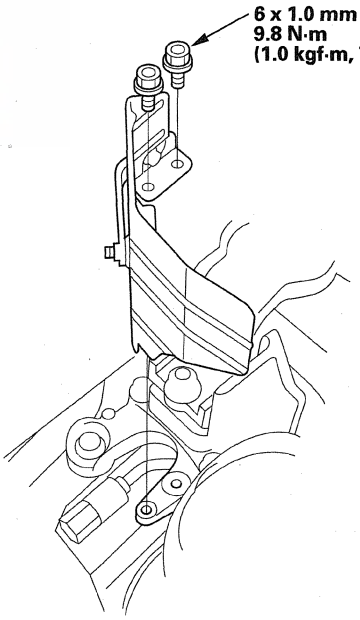

(cont'd)

Transmission Installation (cont'd)

37. Install the dowel pin (A) in the transmission, and install the transfer assembly (B) on the transmission.

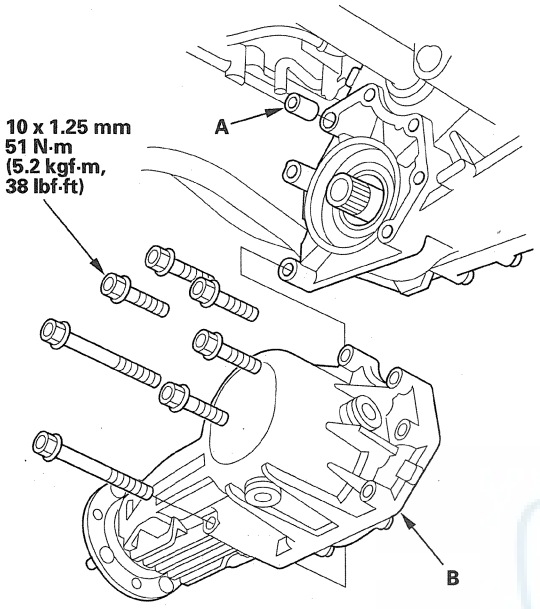

38. Secure the transfer breather tube bracket (A) on the transfer assembly with the bolt, and install the breather tube (B) over the breather pipe (C). If the breather tube was removed from the clamp, install the tube at the dot (D) on the clamp (E).

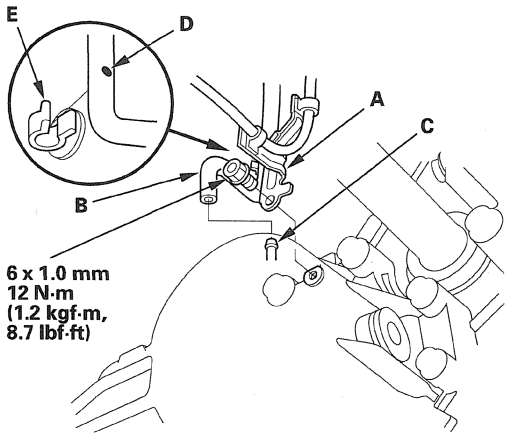

39. Install the propeller shaft (see page 16-45).

40. Install the propeller shaft (A) to the transfer companion flange (B) by aligning the reference mark (C).

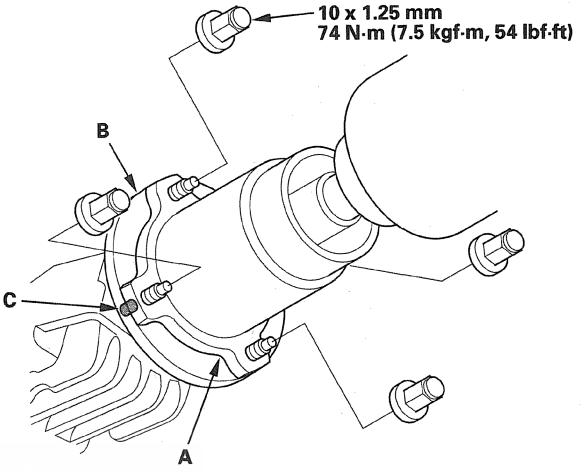

41. Install exhaust pipe A with the new self-locking nuts and new gaskets (B) (C).

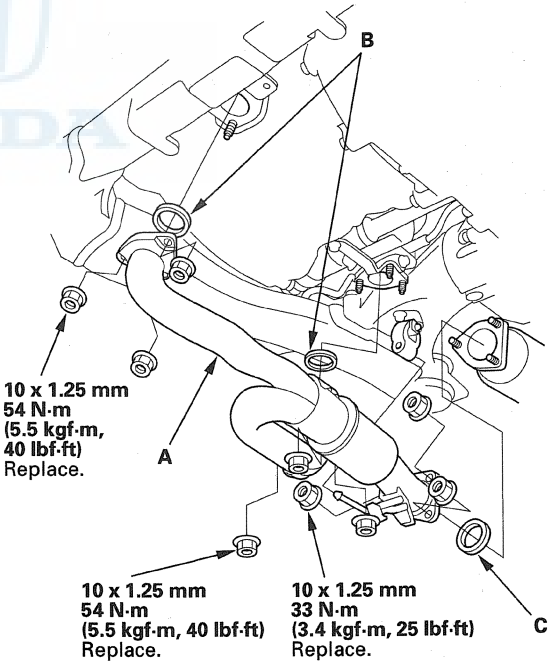

42. Install the damper forks (A) with damper pinch bolts, new damper fork bolts, and new self-locking nuts. Attach the knuckle holder (B) to the knuckle, and secure the knuckle holder with the bolt and new nut.

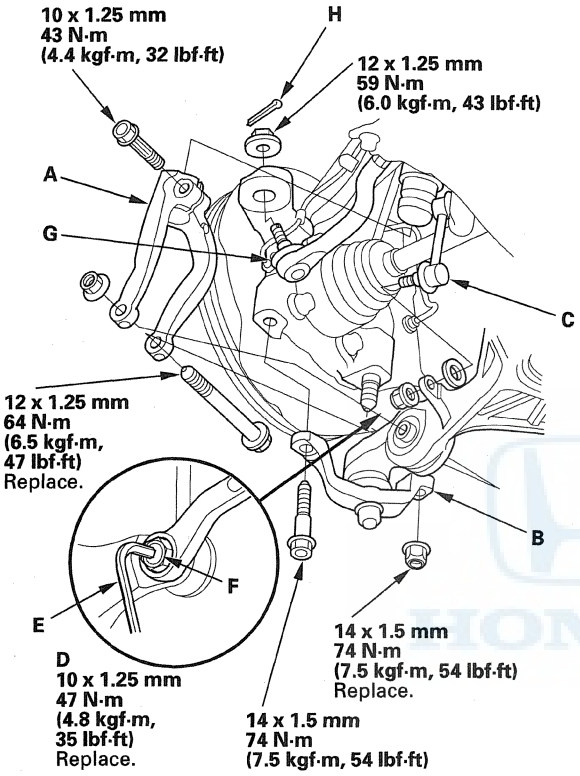

43. Install the stabilizer links (C) to the lower arms, and install the nuts (D). Insert a 6 mm Allen wrench (E) in the ball joint pin (F), and tighten the nuts.

44. Install the tie-rod end ball joints (G) to each knuckle with the nuts and new cotter pins (H).

45. Install the new rear mount bolt, and install the rear mount stop with the new nuts.

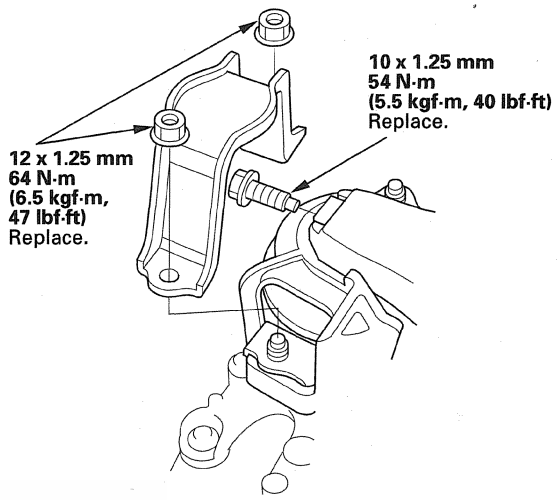

46. Install the new front mount bolt, and install the front mount stop (A) and vacuum hose clamp (B).

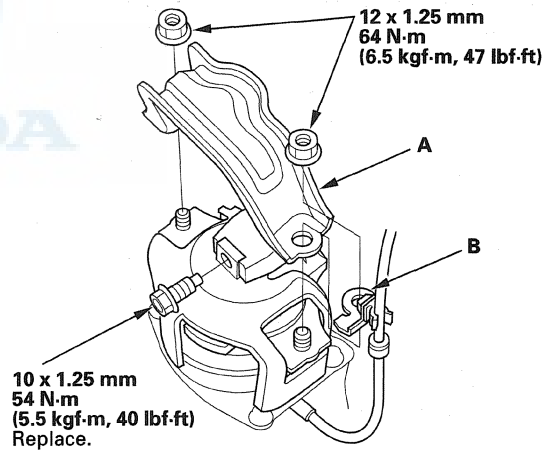

47. Remove the engine support hanger and engine hanger balancer bar.

(cont'd)

Transmission Installation (cont'd)

48. Install the connector bracket on the engine front cylinder head.

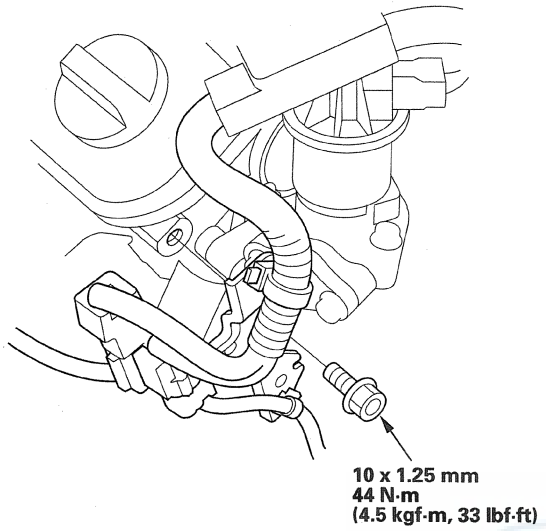

49. Install the clamp brackets on the engine rear cylinder head, and connect the vacuum tube and solenoid connector.

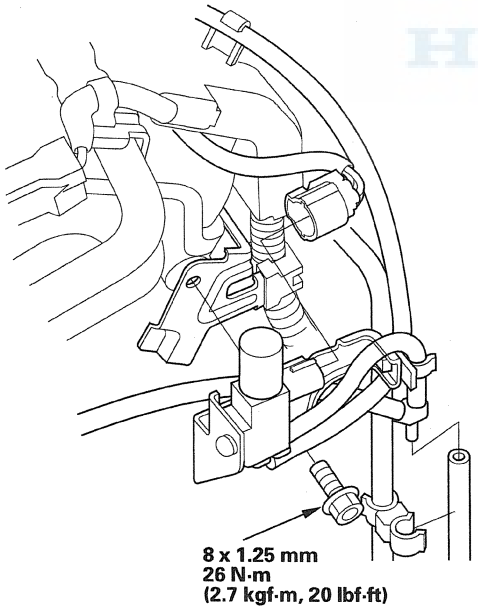

50. Install the shift cable bracket on then steering gearbox stiffener.

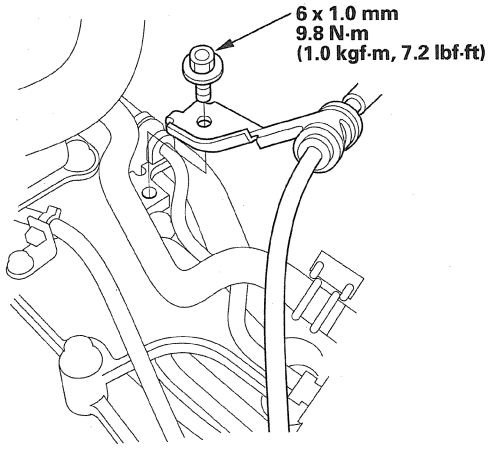

51. Connect the power steering angle sensor connector.

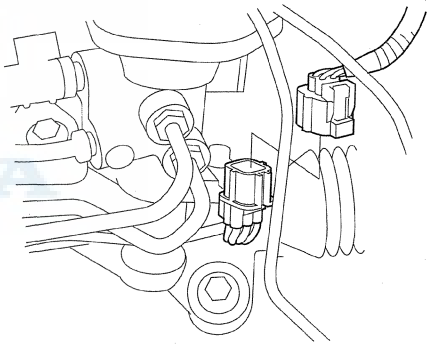

52. Connect the 2nd clutch transmission fluid pressure switch connector (A), and secure the vacuum line with the bolt.

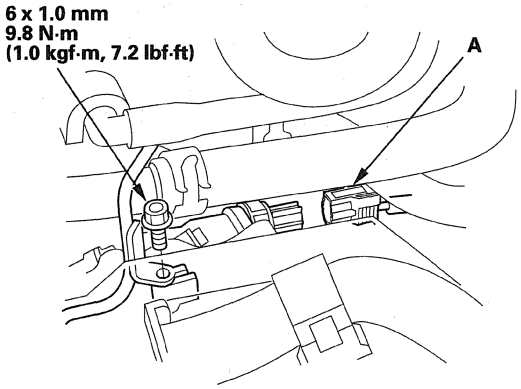

53. Connect the ATF cooler hoses (A) to the ATF cooler lines (B), and secure the hoses with the clips (C) (see page 14-229).

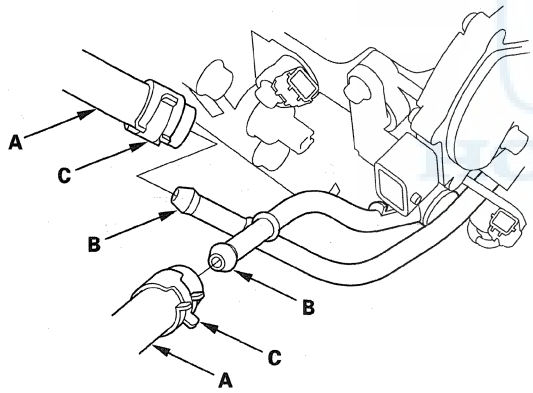

54. Connect the 3rd clutch transmission fluid pressure switch connector (A), output shaft (countershaft) speed sensor connector (B), and ATF temperature sensor connector (C), and install the harness clamp (D) on its bracket (E).

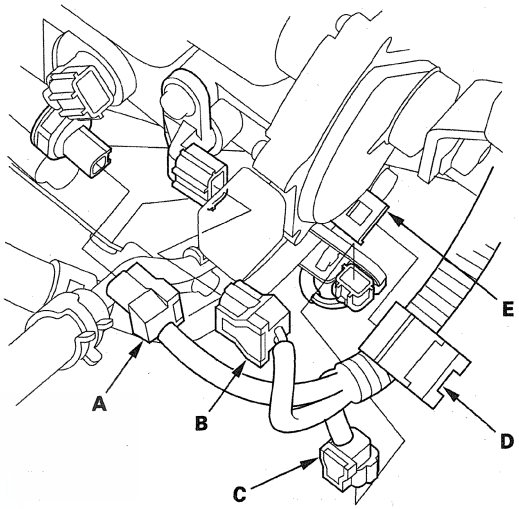

55. Connect the transmission range switch connector (A) and input shaft (mainshaft) speed sensor connector (B).

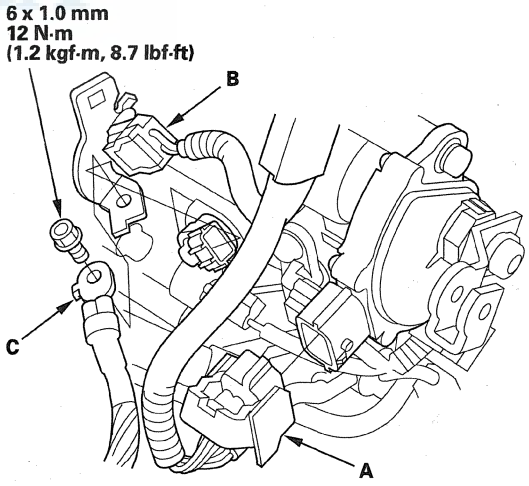

56. Install the transmission ground cable (C).

(cont'd)

Transmission Installation (cont'd)

57. Install the harness clamp bracket (A), and install the harness clamps (B) on the clamp brackets (C).

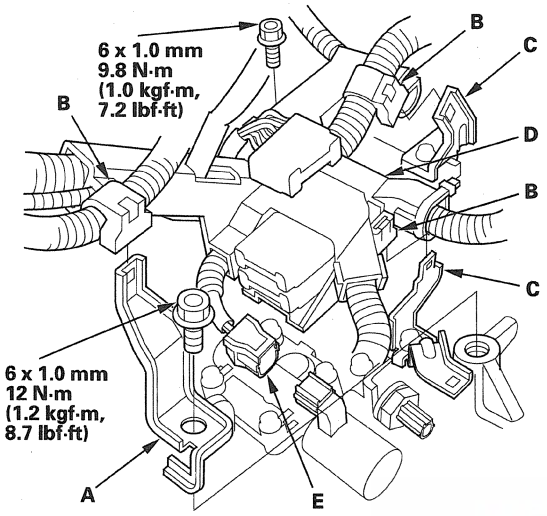

58. Secure the harness cover (D) with the bolt, and connect A/T clutch pressure control solenoid valve C connector (E).

59. Install the harness cover (A) on its bracket (B), and secure the with the bolt.

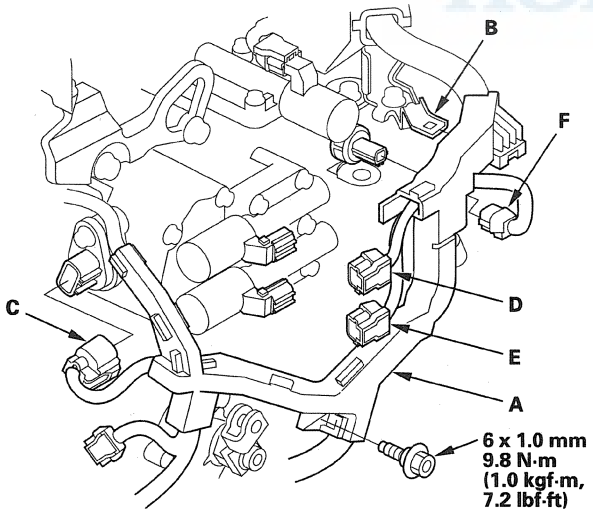

60. Connect the shift solenoid harness connector (C), A/T clutch pressure control solenoid valve A connector (D), A/T clutch pressure control solenoid valve B connector (E), and 4th clutch transmission fluid pressure switch connector (F).

61. Apply molybdenum grease to the hole in the bushing (A) in the shift cable end (B).

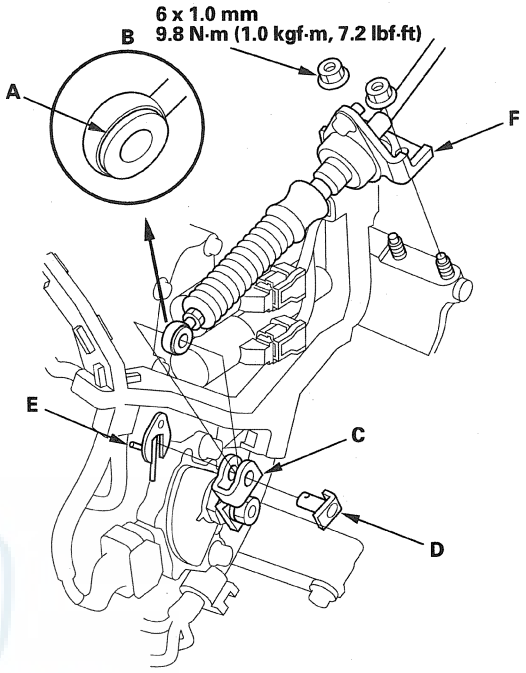

62. Attach the shift cable end to the control lever (C), then insert the control pin (D) into the control lever hole through the shift cable end, and secure the control pin with the spring clip/washer (E).

63. Secure the shift cable bracket (F) with the nuts.

64. Install the starter (A) and the new gasket (B); install the lower bolt (C) through the sensor harness clamp bracket (D).

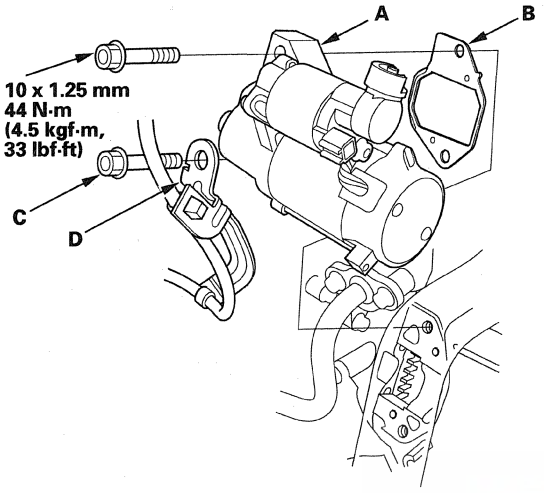

65. Secure the vacuum line (A) with the bolt, and connect the vacuum hose (B) to the vacuum line.

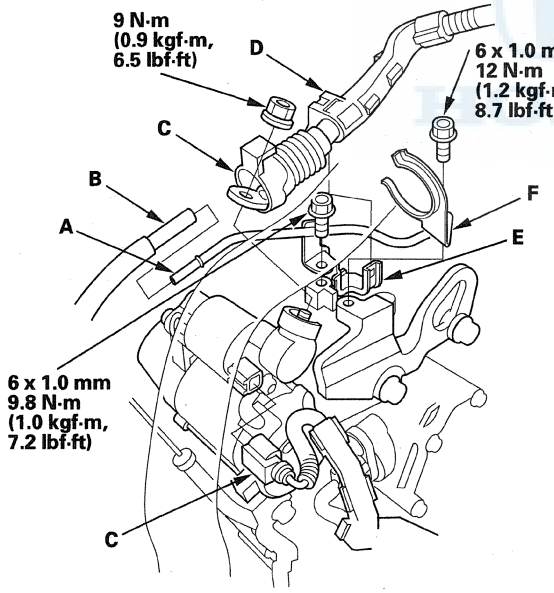

66. Install the starter cables (C), and install the harness clamp (D) on the clamp bracket (E).

67. Secure the radiator hose clamp (F) with the bolt.

68. Install the power steering pump outlet line (A) with the new O-ring (B) to the pump.

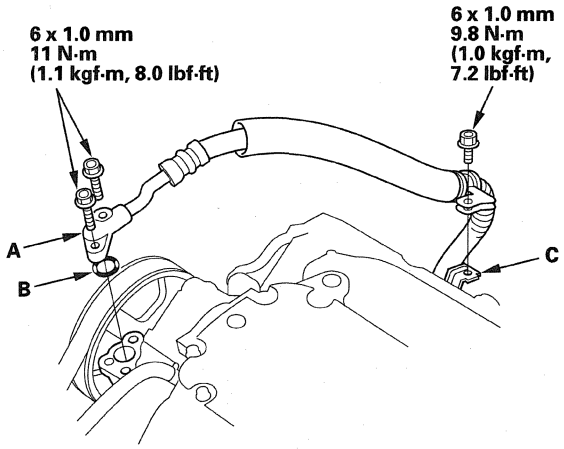

69. Secure the power steering fluid hose clamp with the bolt on its clamp bracket (C).

70. Connect the power steering pressure switch connector.

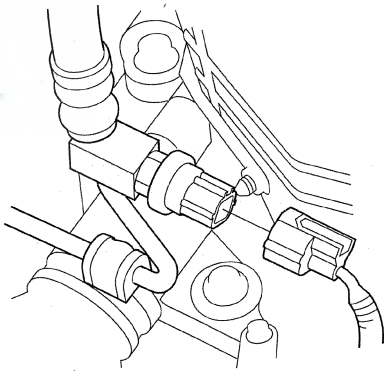

(cont'd)

Transmission Installation (cont'd)

71. Install the strut brace (A) on the body, and secure it with nuts (B) and bolts (C).

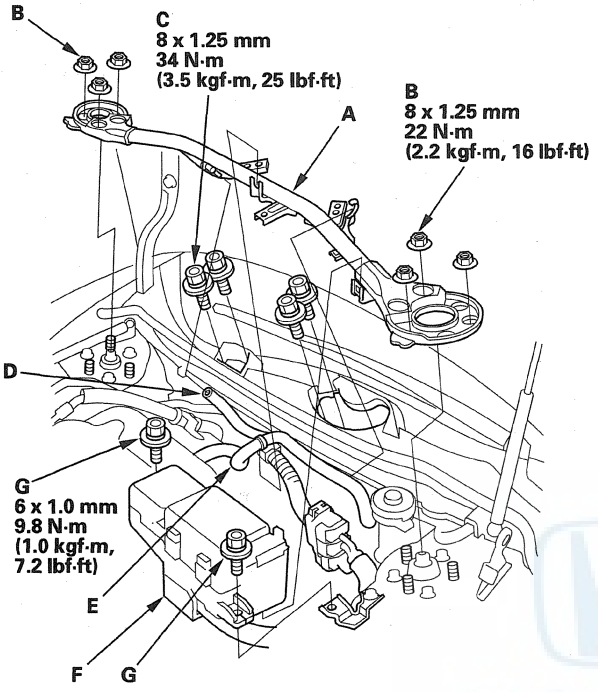

72. Connect the breather tube end (D), and install the vacuum hose (E) on the strut brace.

73. Install the under-hood fuse/relay box (F) on its bracket, and secure it with the bolts (G).

74. Connect the steering joint (see page 17-25).

75. Remove the steering wheel (see page 17-22).

76. Center the SRS cable reel, and install the steering wheel (see page 17-24).

77. Refill the power steering fluid reservoir with fluid upper level line (see page 17-13).

78. Refill the transmission with ATF (see step 6 on page 14-196).

79. Install the battery base.

80. Install the air cleaner (see page 11-366).

81. Do the battery installation procedure (see page 22-92).

82. Install the covers in the following order; cowl cover upper trim (A), left upper fender trim (B), right upper fender trim (C), upper grille cover (D), battery trim (E), and intake manifold cover (F).

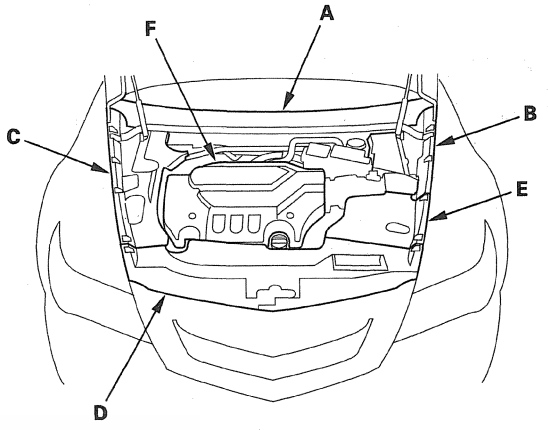

83. Reinstall the hood support struts to the upper location on both sides of the hood.

84. Install the passenger's side windshield wiper arm (see page 22-386).

85. Install the splash shield.

86. Install the front wheels.

87. Set the parking brake. Start the engine, and shift the transmission through all positions three times. Check the shift lever operation, A/T gear position indicator operation, and shift cable adjustment.

88. Check and adjust the front wheel alignment (see page 18-5).

89. Start the engine in P or N position, and warm it up to normal operating temperature (the radiator fan comes on).

90. Turn off the engine, and check the ATF level (see page 14-195).

91. Do the road test (see page 14-172).

ATF Cooler Cleaning

Special Tools Required
- ATF cooler cleaner GHTTTCF6H
- Magnetic nonbypass spin-on filter GTHGNBP2

These special tools are available through the Acura Tool and Equipment Program 888-424-6857.

Before installing an overhauled or remanufactured automatic transmission, you must thoroughly clean the ATF cooler to prevent system contamination. Failure to do so could cause a repeat automatic transmission failure.

The cleaning procedure involves heated ATF-Z1 delivered under high pressure (100 psi). Check the security of all hoses and connections. Always wear safety glasses or a face shield, along with gloves and protective clothing. If you get ATF in your eyes or on your skin, rinse with water immediately.

⚠ WARNING

- Improper use of the ATF cooler cleaner can result in burns and other serious injuries.
- Always wear eye protection and protective clothing, and follow this procedure.

1. Check the fluid in the cooler cleaner tank (The fluid level should be 4.5 inches from the top of the filler neck.). Adjust the level if needed; do not overfill. Use only Acura ATF-Z1; do not use any additives.

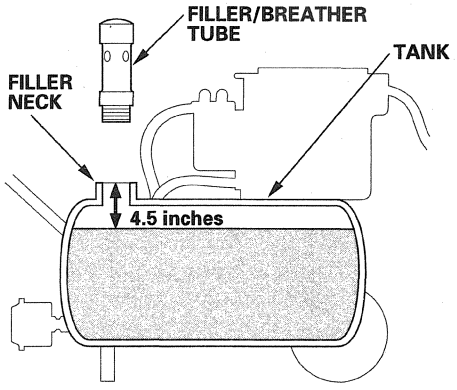

2. Plug the cooler cleaner into a 110 V grounded electrical outlet.

NOTICE

Make sure the outlet has no other appliances (light fixtures, drop lights, extension cords) plugged into it. Also, never plug the cooler cleaner into an extension cord or drop light; you could damage the unit.

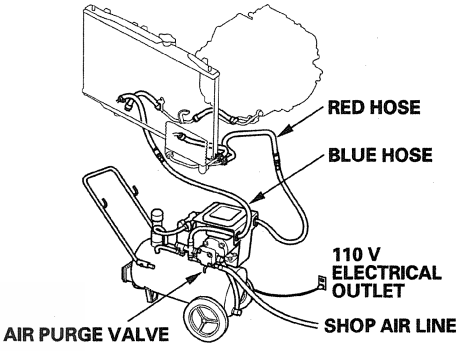

3. Flip the HEAT toggle switch to ON; the green indicator above the toggle switch comes on. Wait 1 hour for the cooler cleaner to reach its operating temperature (The cooler cleaner is ready to use when the temperature gauge reads 140 °to 150 °F.).

   NOTE: If the red indicator above the HEAT toggle switch comes on, the fluid level in the tank is too low for the tank heater to work (see step 1 of this procedure).

4. Select the appropriate pair of fittings, and attach them to the radiator, to the hoses, or to the banjo bolts for flow through the ATF cooler cleaner.

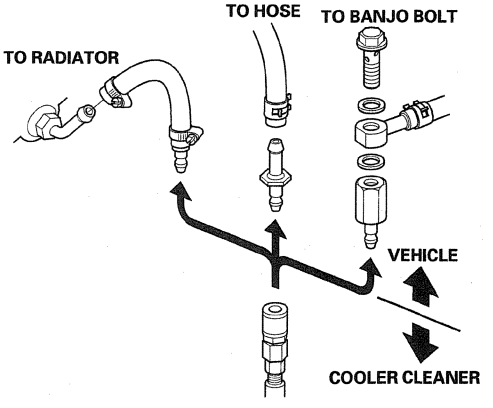

(cont'd)

ATF Cooler Cleaning (cont'd)

5. Connect the red hose to the cooler outlet line (the line that normally goes to the external filter on the transmission).

6. Connect the blue hose to the cooler inlet line.

7. Connect a shop air hose (regulated to 100 to 125 psi) to the air purge valve.

   NOTICE
   The quick-connect fitting has a one-way check valve to keep ATF from entering your shop's air system. Do not remove or replace the fitting. Attach the coupler provided with the cooler cleaner to your shop air line if your coupler is not compatible.

8. Flip the MOTOR toggle switch to ON; the green indicator above the toggle switch comes on. Let the pump run for 5 minutes. While the pump is running, open and close the air purge valve periodically to cause agitation and improve the cleaning process. Always open the valve slowly. At the end of the 5-minutes cleaning period, leave the air purge valve open.

   NOTE: While the pump is running with the air purge valve open, it is normal to see vapor coming from the filler/breather tube vents.

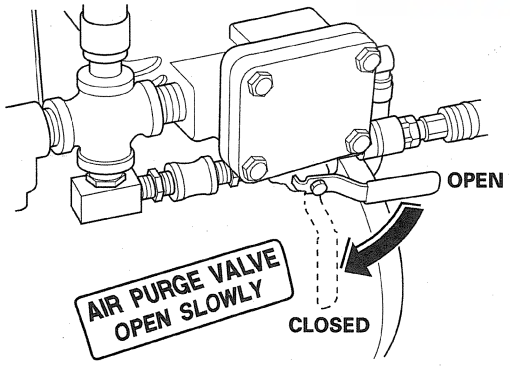

9. With the air purge valve open, flip the MOTOR toggle switch to OFF; the green indicator goes off. Leave the air purge valve open for at least 15 seconds to purge the lines and hoses of residual ATF, then close the valve.

10. Disconnect the red and blue hoses from the ATF cooler. Now connect the red hose to the cooler inlet line.

11. Now connect the blue hose to the cooler outlet line.

12. Flip the MOTOR toggle switch to ON, and let the pump run for 5 minutes. While the pump is running, open and close the air purge valve periodically. Always open the valve slowly. At the end of the 5-minutes cleaning period, leave the air purge valve open.

    NOTE: While the pump is running with the air purge valve open, it is normal to see vapor coming from the filler/breather tube vents.

13. With the air purge valve open, flip the MOTOR toggle switch to OFF. Leave the air purge valve open for at least 15 seconds to purge the lines and hoses of residual ATF, then close the valve.

14. Disconnect the red and blue hoses from the ATF cooler lines.

15. Connect the red and blue hoses to each other.

16. Disconnect the shop air from the air purge valve. Disconnect and stow the coupler if used.

17. Disconnect and stow the fittings from the ATF cooler inlet and outlet lines.

18. Unplug the cooler cleaner from the 110 V outlet.

Tool Maintenance

Follow these instructions to keep the ATF cooler cleaner working properly:

- Replace the two magnetic nonbypass spin-on filters after every 20 hours of use, based on the hour meter, or when you notice a restriction in the ATF flow.
- Check the level and condition of the fluid in the tank before each use.
- Replace the ATF in the tank when it looks dark or dirty.

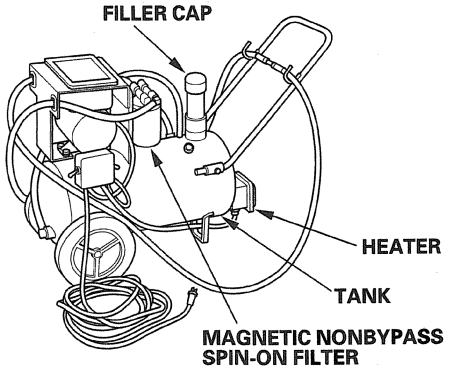

ATF Cooler Hose Replacement

1. Drain the automatic transmission fluid (ATF) (see page 14-196).

2. Install the ATF cooler hoses over the ATF cooler lines, and secure the hoses with the cilps as shown in the details (A) (B) (C) (D) (E), shown in the following list. Keep the tabs of the clips clear of other parts.

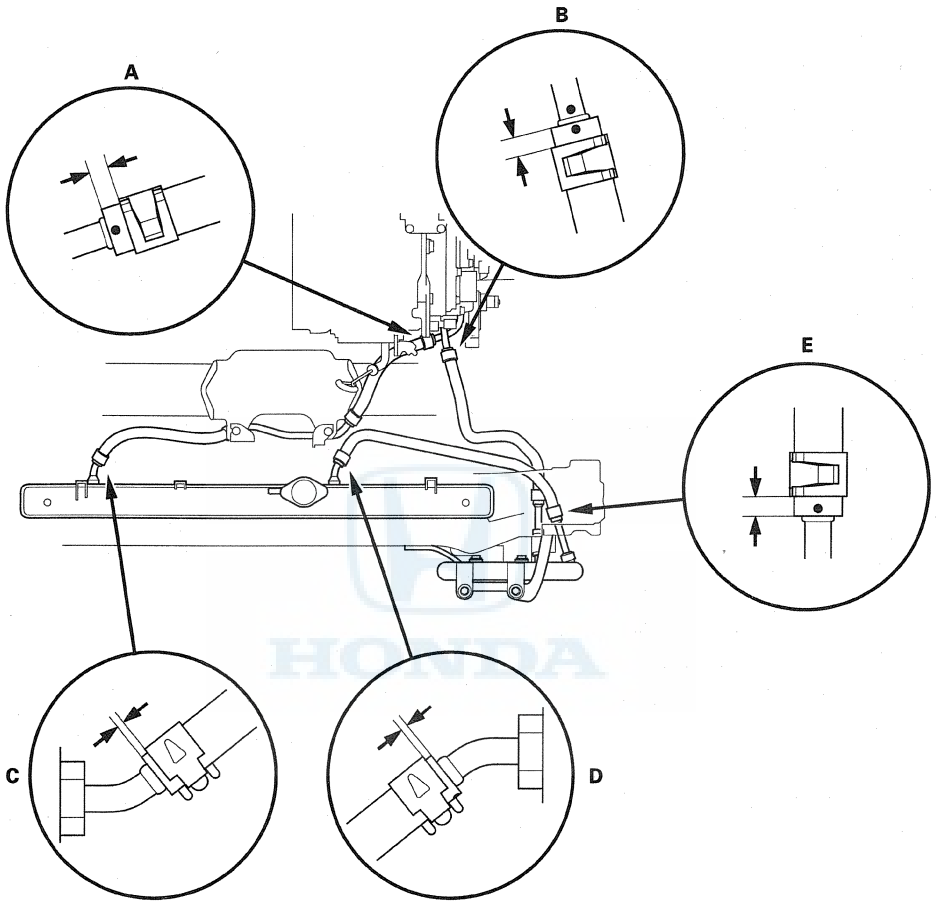

Details	Cooler Hose End	Installed Distance of Clip
A (View from on high)	Contacts the bulge on the line	Between clip end and hose end: 6—8 mm (0.24—0.31 in)
B (View from on high)	Contacts the bulge on the line with aligning the dots	Between clip end and hose end: 6—8 mm (0.24—0.31 in)
C (View from left side)	Contacts the bulge on the line	Between clip end and hose end: 2—4 mm (0.08—0.16 in)
D (View from right side)	Contacts the bulge on the line with facing the dot on the hose in the downward direction	Between clip end and hose end: 2—4 mm (0.08—0.16 in)
E (View from under body)	Contacts the bulge on the line with facing the dot on the hose in the downward direction	Between clip end and hose end: 6—8 mm (0.24—0.31 in)

3. Refill the transmission with ATF (see step 6 on page 14-196).

ATF Cooler Replacement

1. Remove the front bumper (see page 20-149).
2. Disconnect the ATF cooler outlet hose (A) from the ATF cooler, and disconnect the ATF cooler hose (B) from the ATF cooler line.

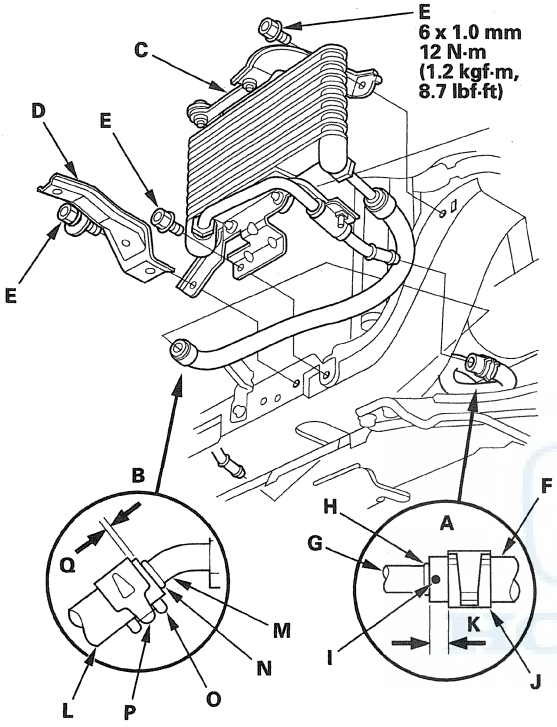

3. Remove the ATF cooler (C), and replace it. Install the new cooler and the bumper stiffener (D) with the bolts (E).
4. Slide the ATF cooler outlet hose (F) over the ATF cooler line (G) until the hose end contacts with the bulge (H) of the ATF cooler line. Face down the dot (I) on the hose end, and secure the hose with the clip (J) at 6—8 mm (0.2—0.3 in) (K) from the hose end.
5. Slide the ATF cooler hose (L) over the ATF cooler line (M) until the hose end contacts with the bulge (N) of the ATF cooler line. Face down the dot (O) on the hose end, and secure the hose with the clip (P) at 2—4 mm (0.1—0.2 in) (Q) from the hose end.
6. Install the front bumper (see page 20-149).

Shift Lever Removal

1. Remove the center console (see page 20-92).
2. Shift the shift lever into R.
3. Remove the nut securing the shift cable end.

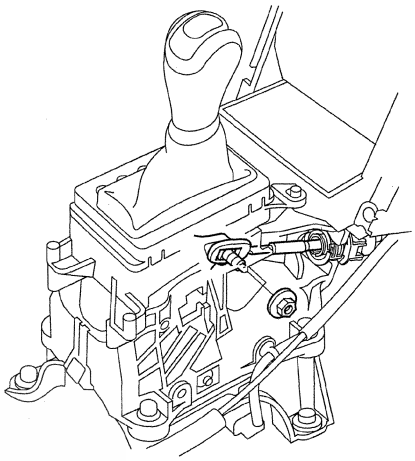

4. Unlock the retainer (A).

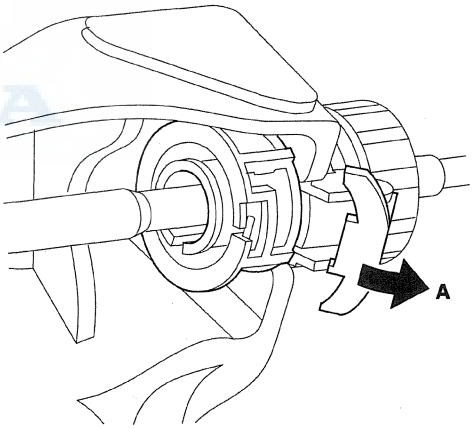

5. Rotate the socket holder retainer (A) counterclockwise (B) until it stops, and push in the retainer (C) to lock it.

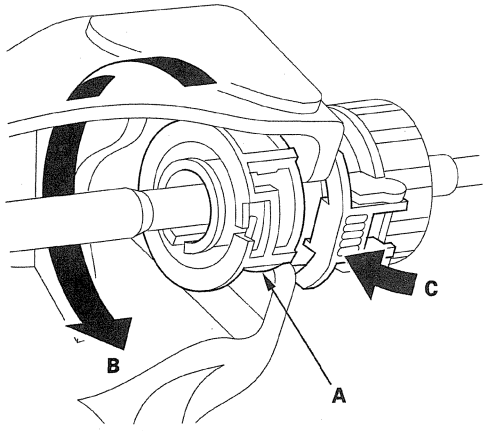

6. Push the socket holder retainer (A) forward, then slide it to remove the shift cable (B) from the shift lever bracket (C). Do not remove the shift cable by pulling the shift cable guide (D).

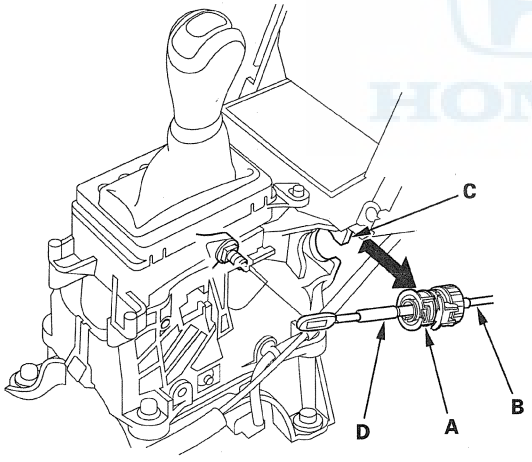

7. Disconnect the shift lock solenoid connector (A), park pin switch/A/T gear position indicator panel light connector (B), and the sensor cluster connector (C).

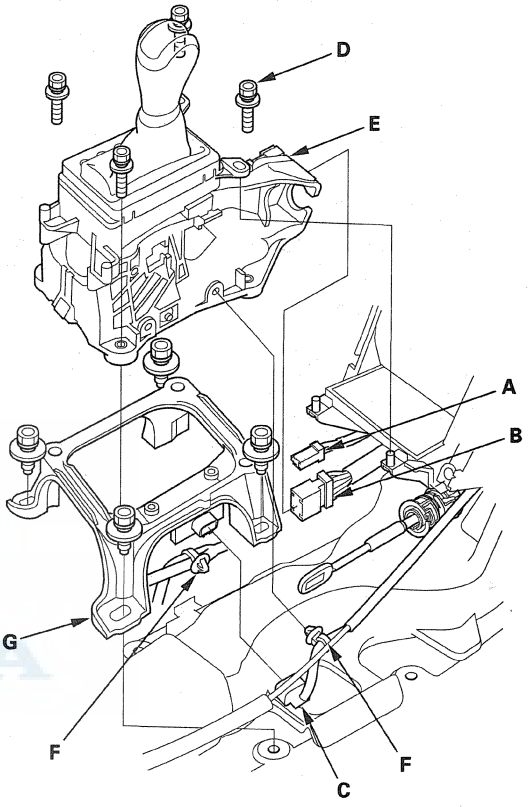

8. Remove the four bolts (D) securing the shift lever bracket (E), and remove the harness clamps (F), then remove the shift lever bracket.

9. Remove the shift lever bracket base (G).

HONDA

Shift Lever Installation

1. Install the shift lever bracket (A) on the shift lever bracket base (B) with the four bolts (C).

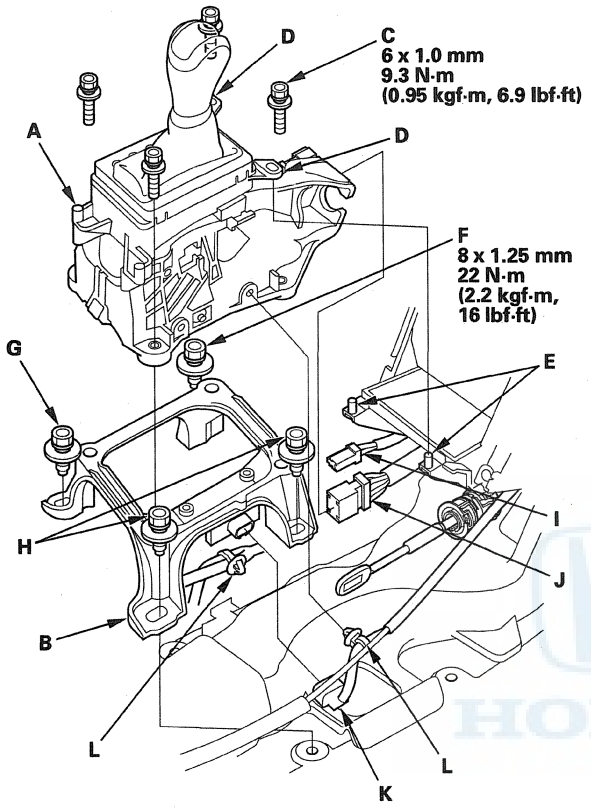

2. Install the shift lever assembly by aligning the positioning holes (D) with the pins (E) on the console panel.

3. Loosely install the mounting bolt (F) on the left front of the shift lever, then install and tighten the mounting bolt (G) on the left rear to 22 N·m (2.2 kgf·m, 16 lbf·ft).

4. Install and tighten the mounting bolts (H) on the right side, then tighten the left front bolt to 22 N·m (2.2 kgf·m, 16 lbf·ft).

5. Connect the shift lock solenoid connector (I), park pin switch/A/T gear position indicator panel light connector (J), and the sensor cluster connector (K).

6. Install the harness clamps (L) on the shift lever bracket.

7. Install the shift cable on the shift lever bracket, and adjust the shift cable (see step 7 on page 14-239).

Shift Lever Disassembly/Reassembly

NOTE:
- Make sure not to get any silicone grease on the terminal part of the connectors and switches, especially if you have silicone grease on your hands or gloves.
- Do not wipe off the grease that is applied to the portion of the shift lever marked with an asterisk (*) when you disassemble or assemble it because a special grease is used.

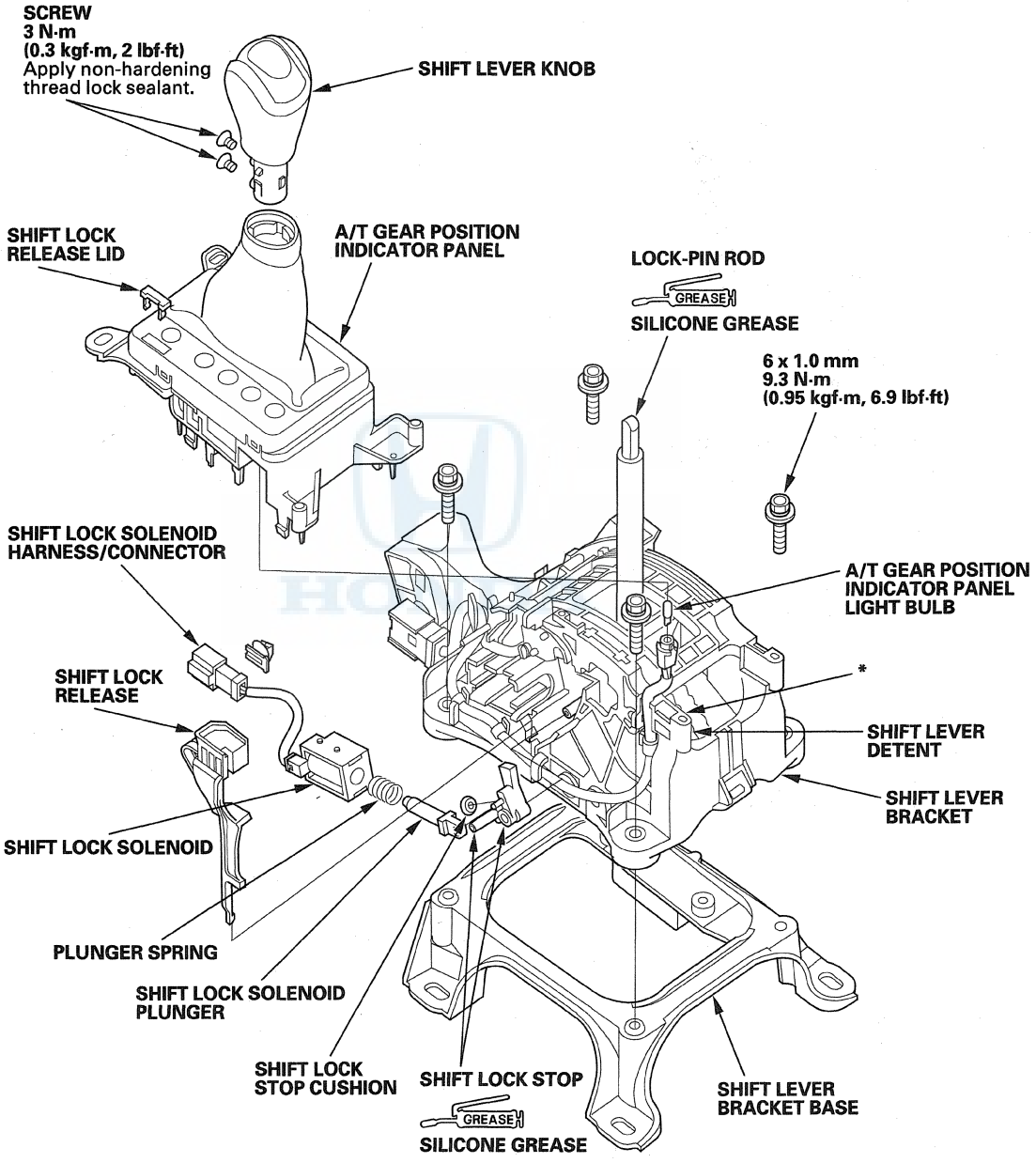

Shift Lever Knob Replacement

NOTE: Make sure not to get any silicone grease on the terminal part of the connectors and switches, especially if you have silicone grease on your hands or gloves.

1. Grasp the shift lever boot ring, and slip it out of the shift lever knob.

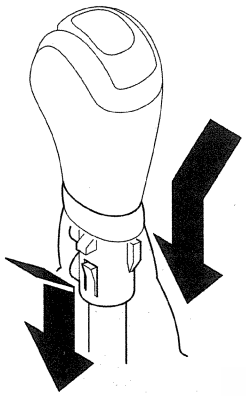

2. Remove the screws (A), and remove the shift lever knob (B).

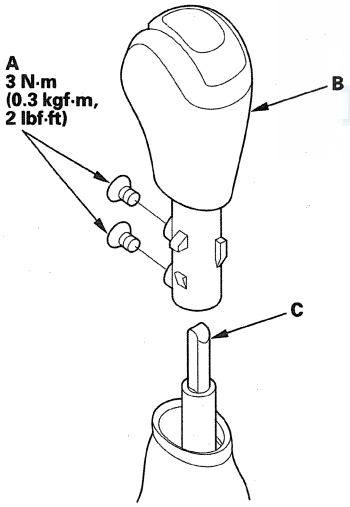

3. Apply silicone grease to the top of the lock-pin rod (C), and install the new shift lever knob over the shift lever.
4. Apply non-hardening thread lock sealant to the screw threads, and secure the shift lever knob with the screws.
5. Install the shift lever boot ring on the shift lever knob.

Shift Lever Boot and A/T Gear Position Indicator Panel Replacement

1. Remove the center console panel (see page 20-92).
2. Remove the shift lever knob (see page 14-234).
3. Remove the A/T gear position indicator panel light bulb socket from the indicator panel, and remove the indicator panel/shift lever boot assembly.
4. Disassemble the indicator panel upper (A), lower (B), and boot (C).

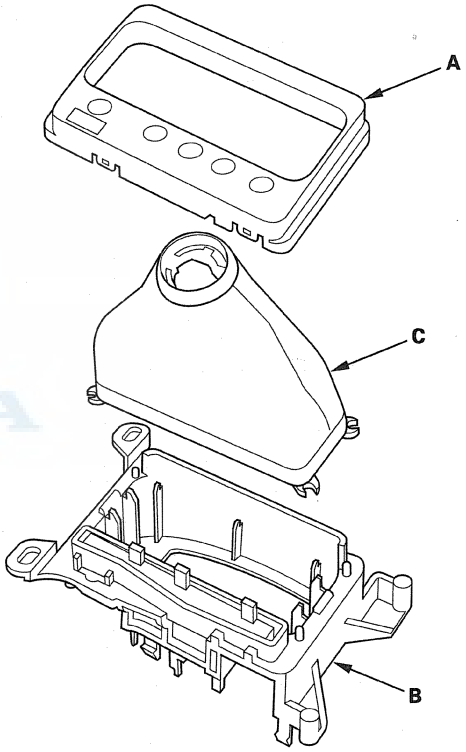

5. Replace the shift lever boot or A/T gear position indicator panel.

6. Install the shift lever boot (A) on the A/T gear position indicator lower panel (B) with aligning the corner slots (C) with the tabs (D) on the lower panel.

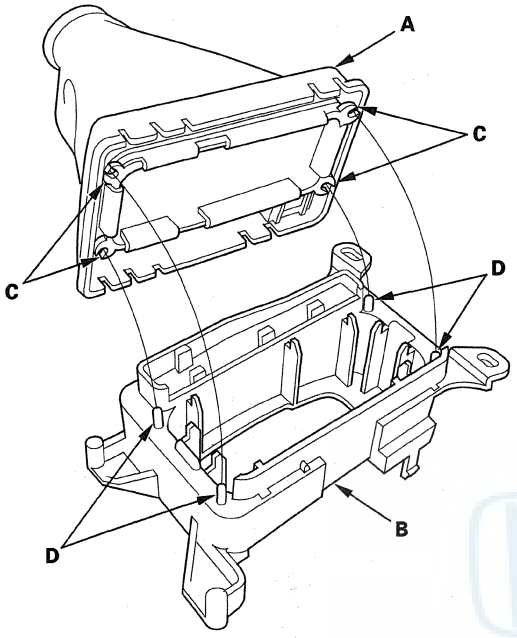

7. Install the upper panel on the lower panel.
8. Install the indicator panel/boot assembly on the shift lever bracket.
9. Install the A/T gear position indicator panel light bulb socket in the indicator panel.
10. Install the shift lever knob (see page 14-234).
11. Install the center console panel (see page 20-92).

Shift Cable Replacement

1. Raise the vehicle on a lift, and make sure it is supported securely.
2. Remove the center console (see page 20-92).
3. Shift the shift lever into R.
4. Remove the nut securing the shift cable end.

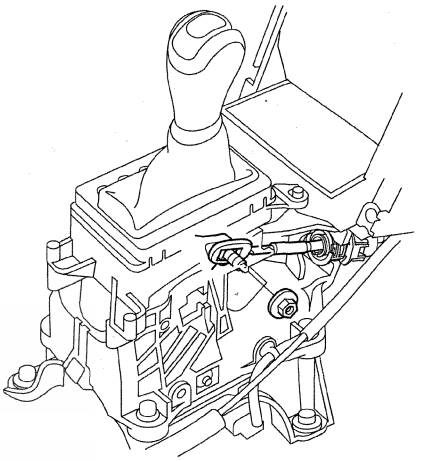

5. Unlock the retainer (A).

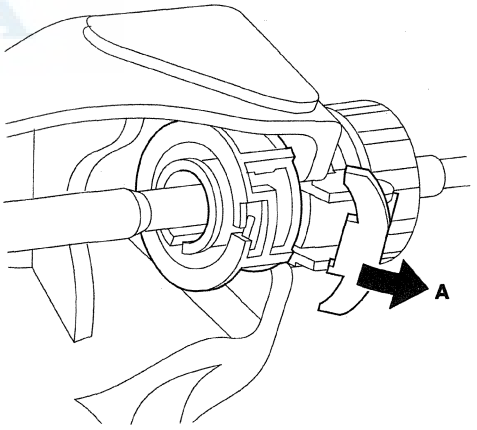

(cont'd)

Shift Cable Replacement (cont'd)

6. Rotate the socket holder retainer (A) counterclockwise (B) until it stops, and push in the retainer (C) to lock it.

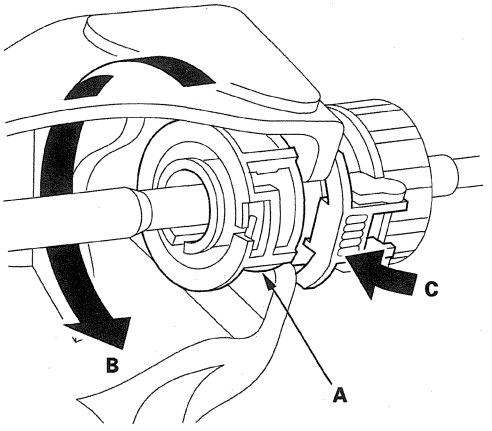

7. Push the socket holder retainer (A) forward, then slide it to remove the shift cable (B) from the shift lever bracket (C).

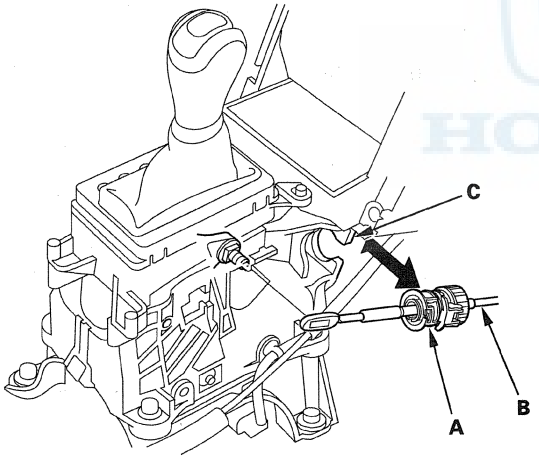

8. Do the battery removal procedure (see page 22-92).
9. Remove the battery base.
10. Remove the air cleaner (see page 11-366).
11. Remove the nuts securing the shift cable bracket (A).

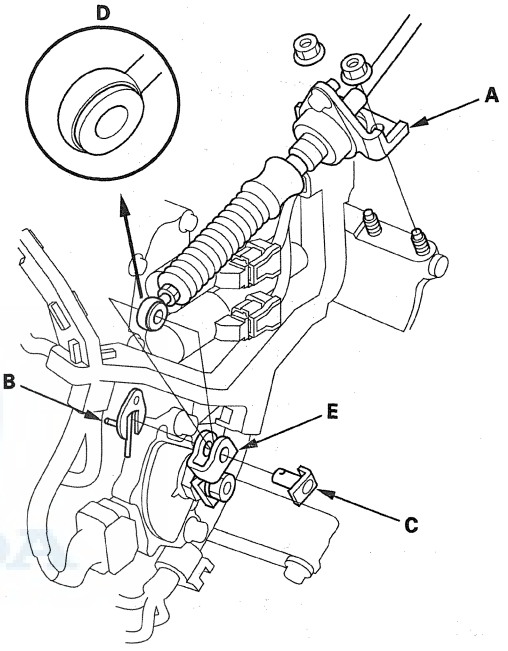

12. Remove the spring clip/washer (B) and control pin (C), then separate the shift cable end (D) from the control lever (E).

13. Remove the shift cable bracket from the steering gearbox stiffener.

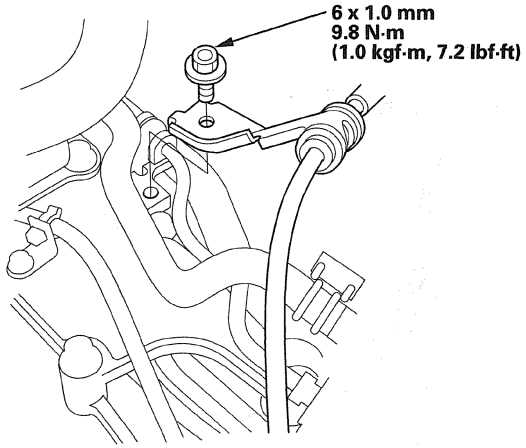

14. Remove the heat shield under the shift cable grommet.

15. Remove the shift cable grommet, and pull out the shift cable.

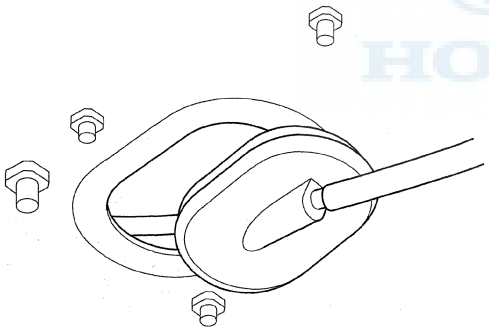

16. Insert the new shift cable through the grommet hole, and install the grommet in its hole. Do not bend the shift cable excessively.

17. Install the heat shield.

18. Secure the shift cable bracket on the steering gearbox stiffener with the bolt.

19. Apply molybdenum grease to the hole in the bushing (A) in the shift cable end (B).

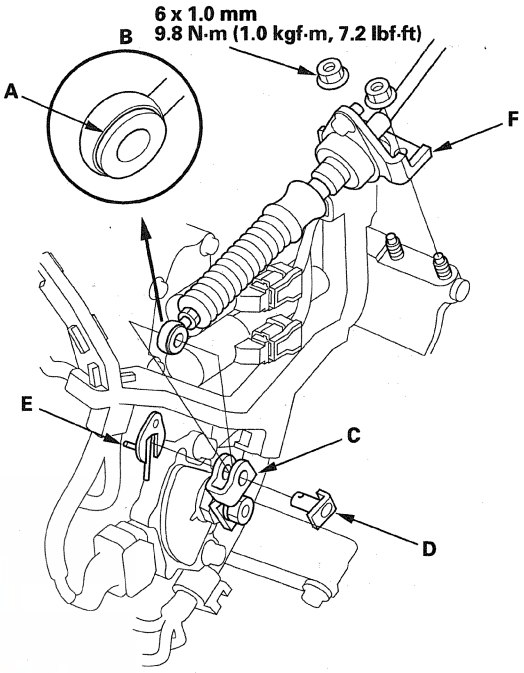

20. Attach the shift cable end to the control lever (C), then insert the control pin (D) into the control lever hole through the shift cable end, and secure the control pin with the spring clip/washer (E).

21. Secure the shift cable bracket (F) with the nuts.

22. Install the shift cable on the shift lever bracket, and adjust the shift cable (see step 7 on page 14-239).

23. Install the air cleaner (see page 11-366).

24. Install the battery base.

25. Do the battery installation procedure (see page 22-92).

26. Reinstall the center console (see page 20-92).

Shift Cable Adjustment

1. Remove the center console (see page 20-92).
2. Shift the shift lever into R.
3. Remove the nut securing the shift cable end.

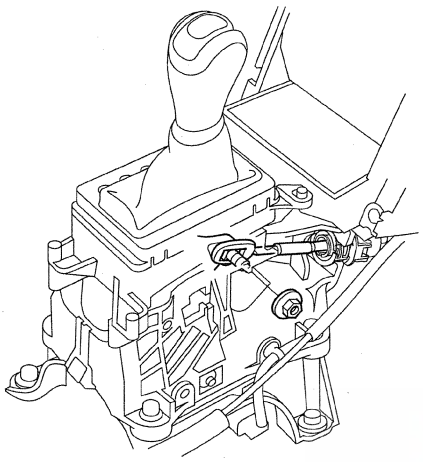

4. Unlock the retainer (A).

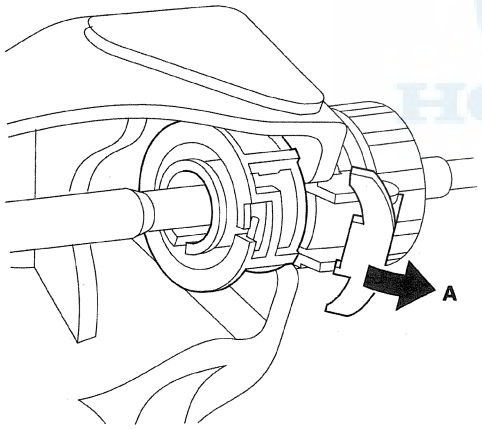

5. Rotate the socket holder retainer (A) counterclockwise (B) until it stops, and push in the retainer (C) to lock it.

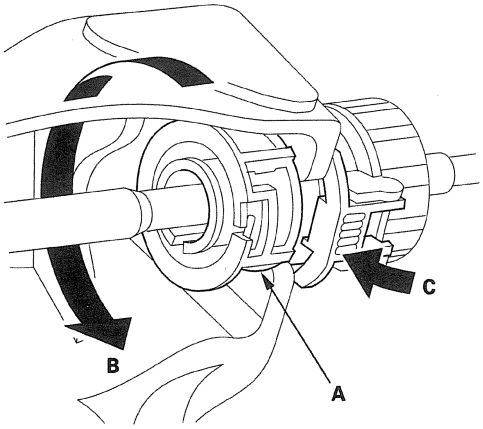

6. Push the socket holder retainer (A) forward, then slide it to remove the shift cable (B) from the shift lever bracket (C). Do not remove the shift cable by pulling the shift cable guide (D).

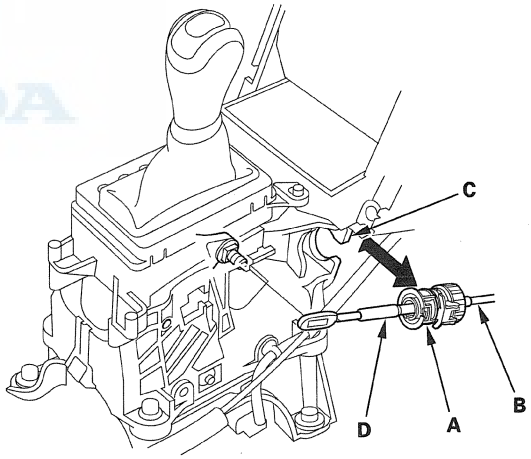

7. Push the shift cable (A) until it stops, then release it. Pull the shift cable back one step so that the shift position is in R. Do not hold the shift cable guide (B) to adjust the shift cable.

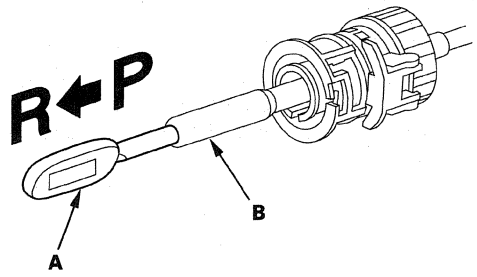

8. Turn the ignition switch to ON (II), and verify that the R position indicator comes on.

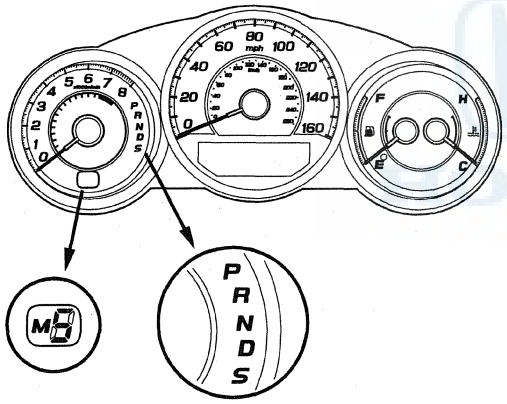

9. Turn the ignition switch to LOCK (0).

10. Place the shift lever in the R position, then insert a 6.0 mm (0.24 in) pin (A) through the positioning hole (B) on the shift lever bracket, through the positioning hole (C) on the shift lever, and into the positioning hole on the shift lever bracket.

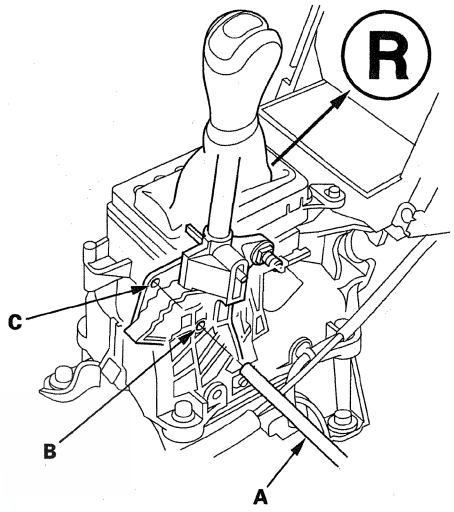

11. Check that the shift lever is secured in the R position.

12. Unhinge the retainer lock (A).

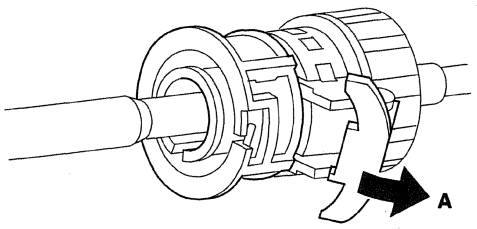

(cont'd)

Shift Cable Adjustment (cont'd)

13. Rotate the socket holder retainer (A) counterclockwise (B) until it stops to create clearance (C) between the socket holder (D) and holder retainer, and push the retainer lock (E) into the socket holder retainer to lock the retainer.

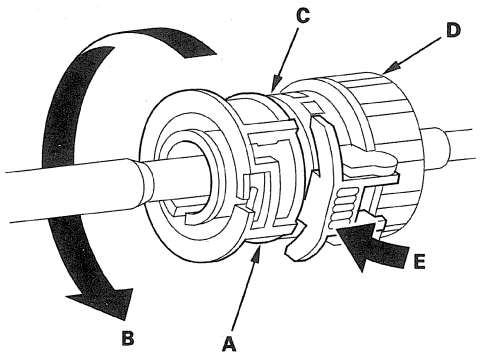

14. Align the clearance (A) between the socket holder (B) and the socket holder retainer (C) with the opening (D) in the shift lever bracket (E), then slide the holder into the bracket with installing the shift cable end (F) over the mounting stud (G) by aligning its square hole (H) with the square fitting (I) at the bottom of the stud. Do not install the shift cable by holding the shift cable guide (J).

NOTE: When the socket holder is installed in the shift lever bracket, the retainer lock is unhinged and releases the holder retainer lock, then the holder retainer returns under spring force to secure the shift cable.

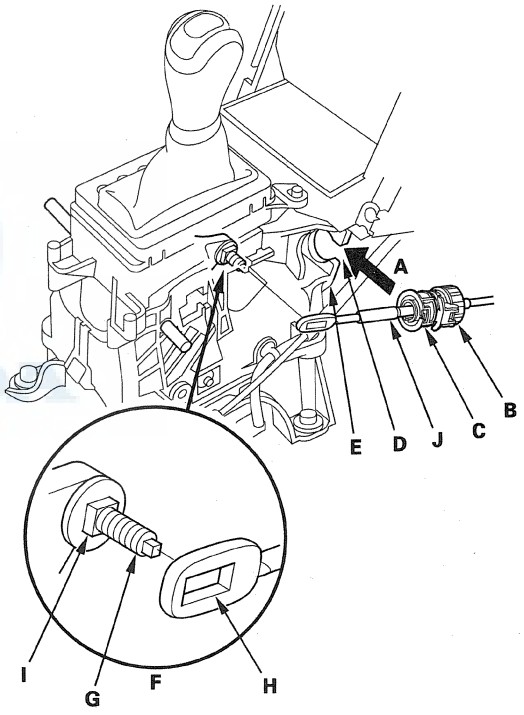

15. Push the retainer lock (A) fully to lock the socket holder retainer (B), and make sure that the retainer lock fits into the hinged-joint (C). If the retainer lock does not fit with the edge of the hinged-joint, rotate the holder retainer counterclockwise while pushing the retainer lock until it locks.

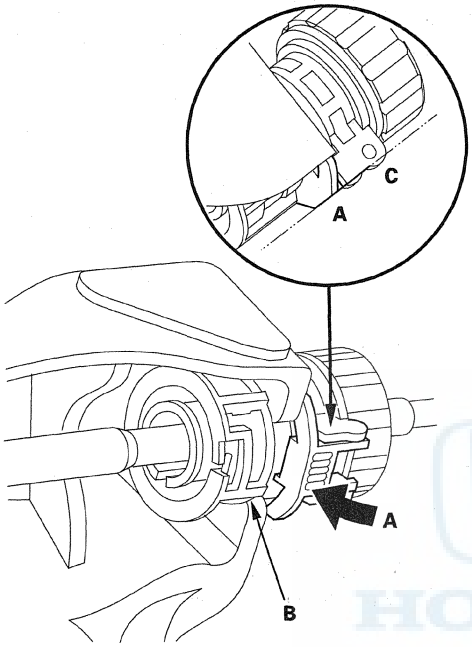

16. Check that the shift cable end is properly installed on the mounting stud.

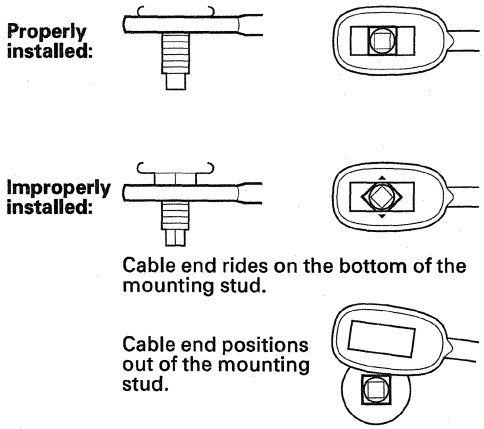

17. If the cable end is out of position on the mounting stud, remove the shift cable from the bracket, and reinstall the shift cable. Do not install the shift cable end on the mounting stud while the shift cable is on the bracket. If the cable end rides on the bottom of the mounting stud, rotate the stud and align the square fitting with the hole.

18. Secure the shift cable end with the nut (A).

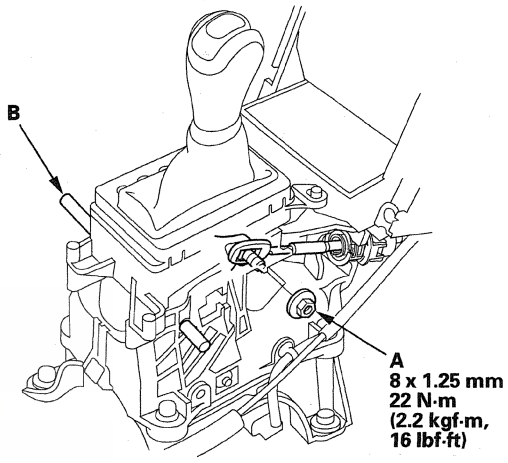

19. Remove the 6.0 mm (0.24 in) pin (B) that was installed to hold the shift lever.

20. Turn the ignition switch to ON (II). Move the shift lever to each position, and check that the A/T gear position indicator follows the transmission range switch.

21. Allow all four wheels to rotate freely.

22. Start the engine, and check the shift lever operation in all shift lever positions.

23. Turn the engine off, shift into P, and check that the shift lock works properly. Push the shift lock release, and check that the shift lever releases.

24. Reinstall the center console (see page 20-92).

A/T Gear Position Indicator

Component Location Index

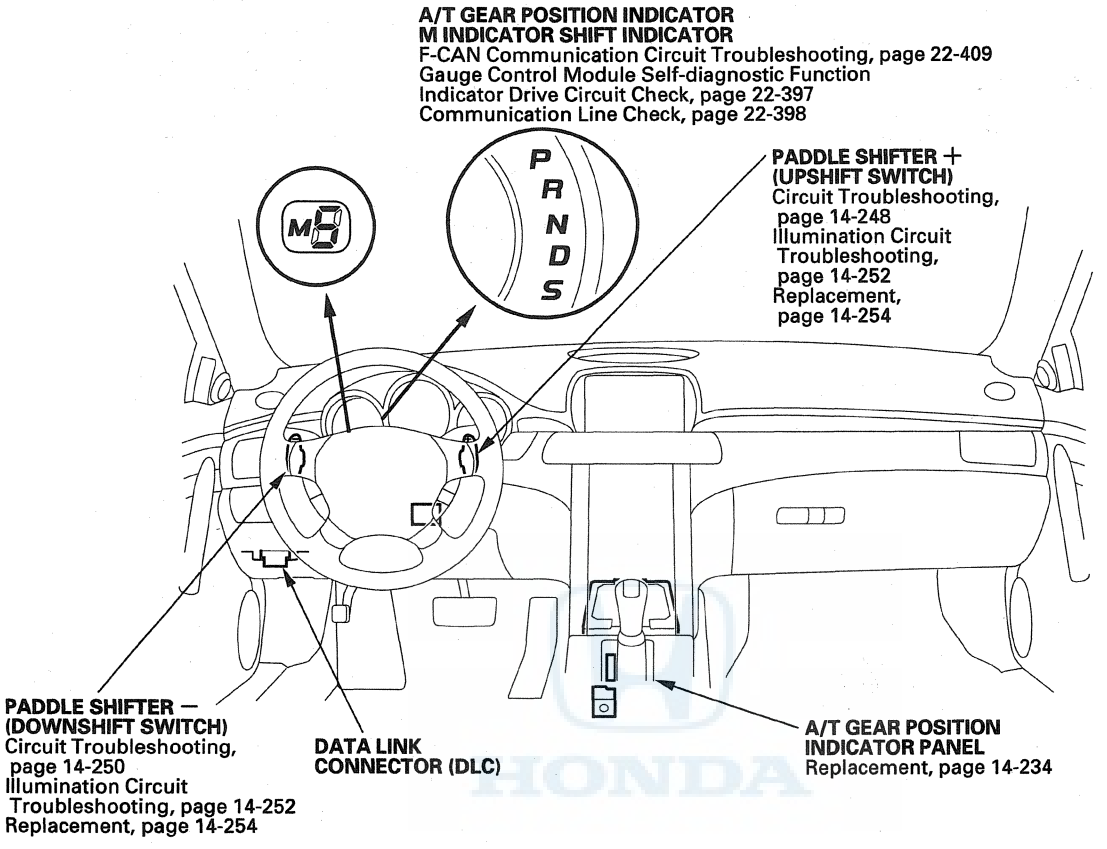

A/T GEAR POSITION INDICATOR
M INDICATOR SHIFT INDICATOR
F-CAN Communication Circuit Troubleshooting, page 22-409
Gauge Control Module Self-diagnostic Function
Indicator Drive Circuit Check, page 22-397
Communication Line Check, page 22-398

PADDLE SHIFTER + (UPSHIFT SWITCH)
Circuit Troubleshooting, page 14-248
Illumination Circuit Troubleshooting, page 14-252
Replacement, page 14-254

PADDLE SHIFTER − (DOWNSHIFT SWITCH)
Circuit Troubleshooting, page 14-250
Illumination Circuit Troubleshooting, page 14-252
Replacement, page 14-254

DATA LINK CONNECTOR (DLC)

A/T GEAR POSITION INDICATOR PANEL
Replacement, page 14-234

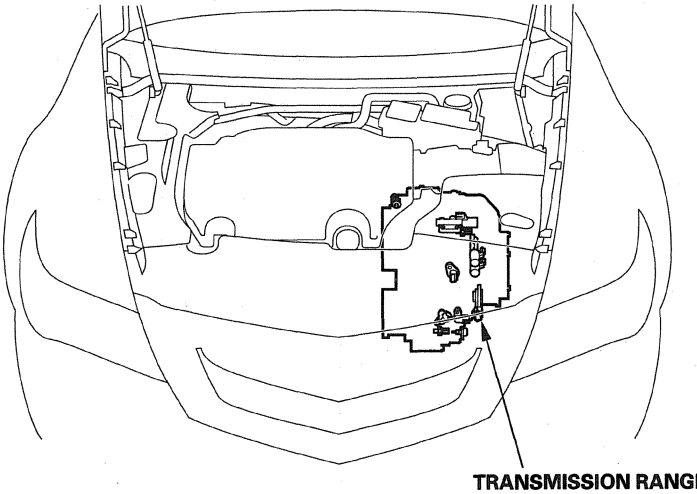

TRANSMISSION RANGE SWITCH
Test, page 14-244
Replacement, page 14-245

Circuit Diagram

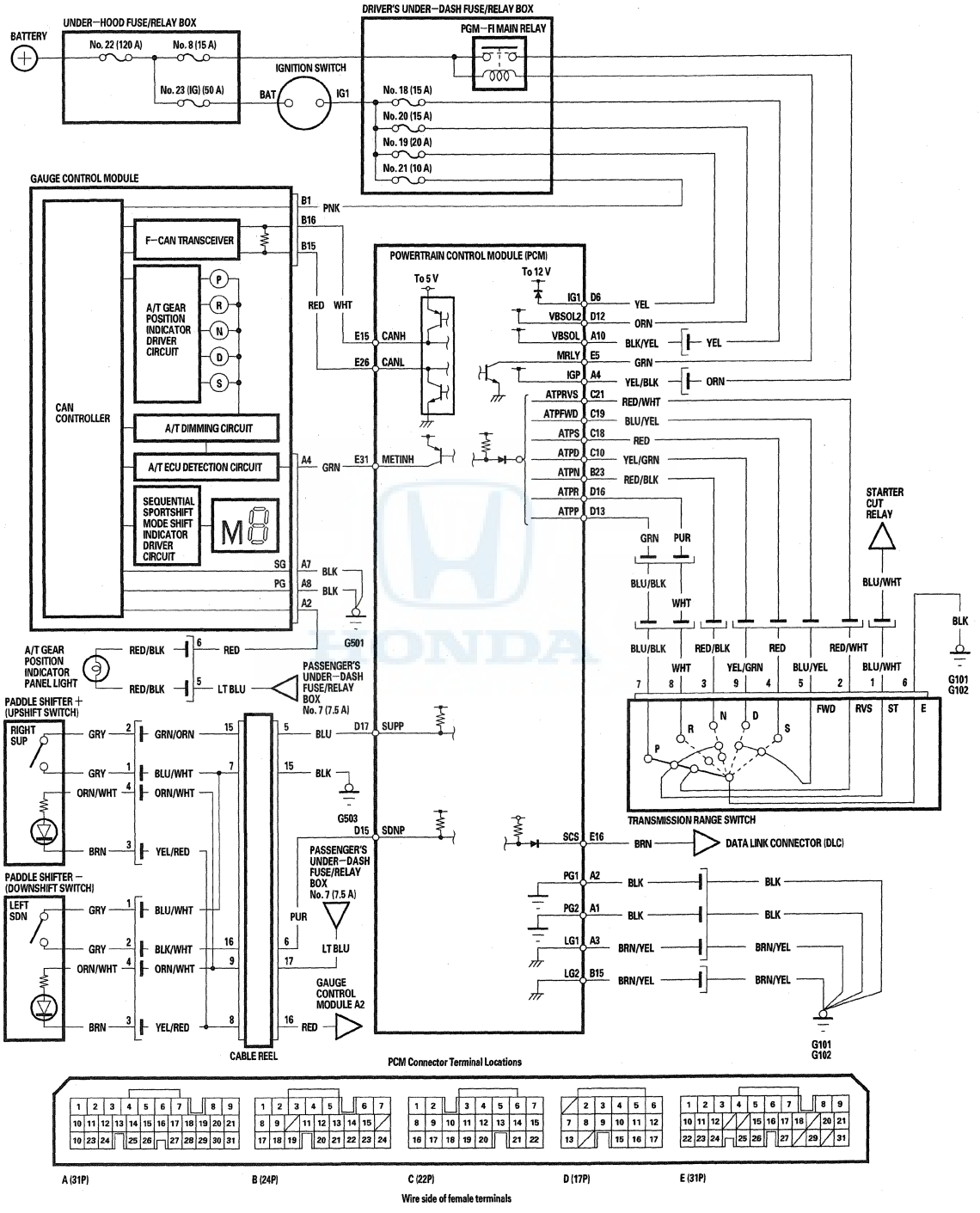

Transmission Range Switch Test

1. Do the battery removal procedure (see page 22-92).
2. Remove the battery base.
3. Remove the air cleaner (see page 11-366).
4. Disconnect the transmission range switch connector.

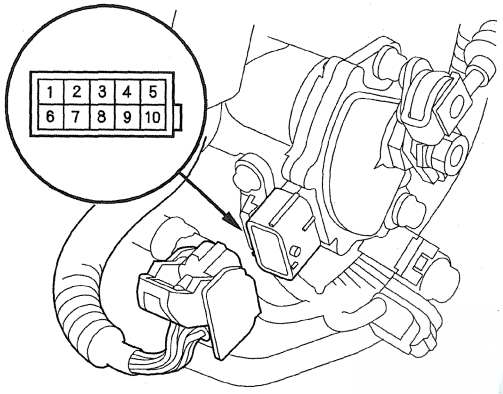

5. Check for continuity between terminals at the switch connector. There should be continuity between the terminals in the following table for each switch position.

Transmission Range Switch Connector

Position/Connector Terminal/Signal Connections										
	1	2	3	4	5	6	7	8	9	10
	ATP ST	ATP RVS	N	S	ATP FWD	GND	P	R	D	—
P	○	○				○	○			
R		○				○		○		
N	○	○	○			○				
D					○	○			○	
S				○	○	○				

6. Transmission range switch test is finished if the test results are OK.
   If there is no continuity between any terminals, check that the transmission range switch installation. If the switch installation is OK, replace the switch (see page 14-245).
7. Install the air cleaner (see page 11-366).
8. Install the battery base.
9. Do the battery installation procedure (see page 22-92).

Transmission Range Switch Replacement

1. Do the battery removal procedure (see page 22-92).
2. Remove the air cleaner (see page 11-366).
3. Remove the battery base.
4. Remove the nuts securing the shift cable bracket (A).

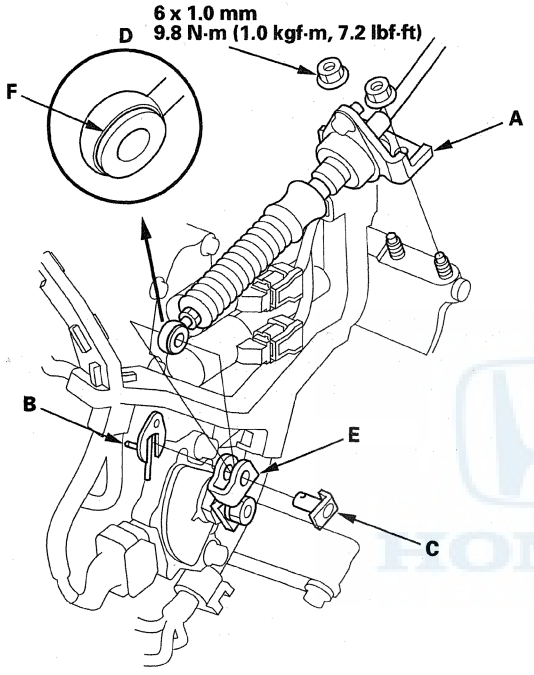

5. Remove the spring clip/washer (B) and control pin (C), then separate the shift cable end (D) from the control lever (E).
6. Check the bushing (F) in the shift cable end for a proper fit and wear. If the bushing is loose or worn, replace the shift cable (see page 14-235).
7. Disconnect the transmission range switch connector.
8. Pry the lock tab of the lock washer (A) on the control lever (B), and remove the nut (C), lock washer, spring washer (D) and control lever.

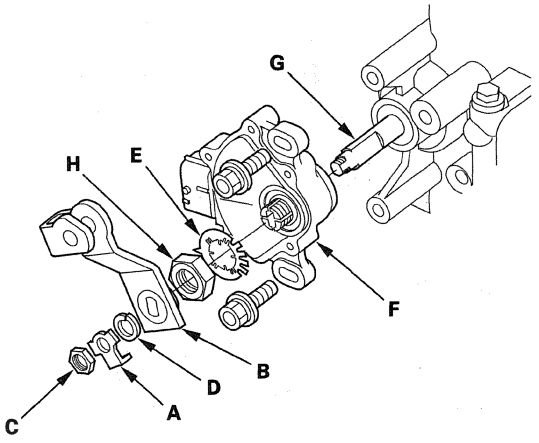

9. Pry the lock tabs of the lock washer (E) on the transmission range switch (F), hold the selector control shaft (G) with a 6.0 mm wrench, and loosen the locknut (H).
10. Remove the locknut and lock washer, then remove the transmission range switch (two bolts).

(cont'd)

Transmission Range Switch Replacement (cont'd)

11. Set the new transmission range switch (A) to the N position. The transmission range switch clicks in the N position, and the control shaft hole (B) aligns with the N position line (C).

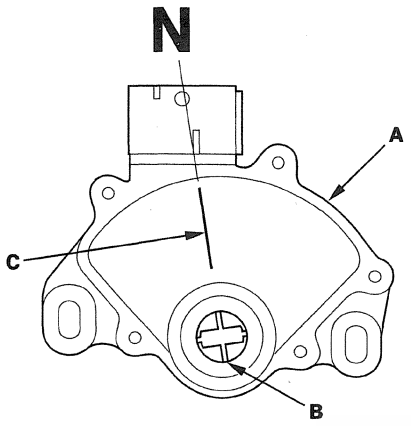

12. With a 6.0 mm wrench, turn the control shaft fully counterclockwise (viewed from the shaft end) to the P position. Turn the control shaft back two click-stopped positions so that it is in the N position.

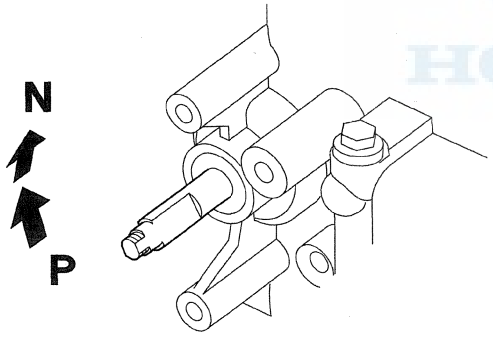

13. Install the transmission range switch (A) gently over the control shaft (B), and install the bolts loosely.

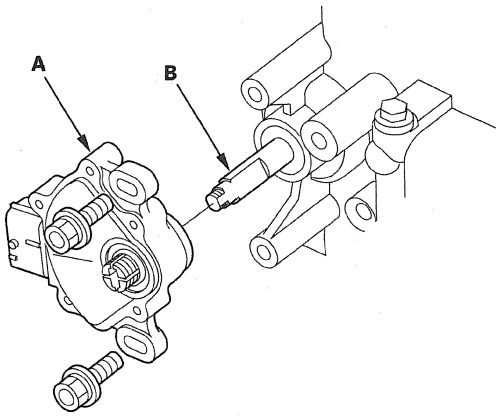

14. Install the new lock washer (A) over the control shaft (B) while aligning the indicator tab (C) of the lock washer with the N positioning line (D) on the transmission range switch (E), and install the locknut (F).

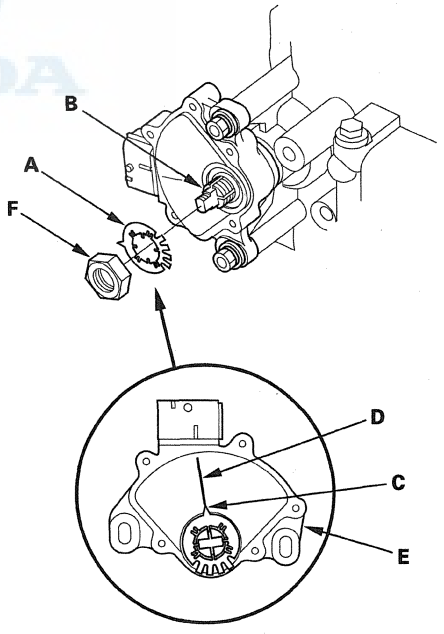

15. Push the locknut against the transmission housing to seat the transmission range switch into the control shaft, and tighten the locknut (A) to 12 N·m (1.2 kgf·m, 8.7 lbf·ft) while holding the control shaft (B) with a 6.0 mm wrench (C), then bend the lock tabs (D) of the lock washer against the locknut.

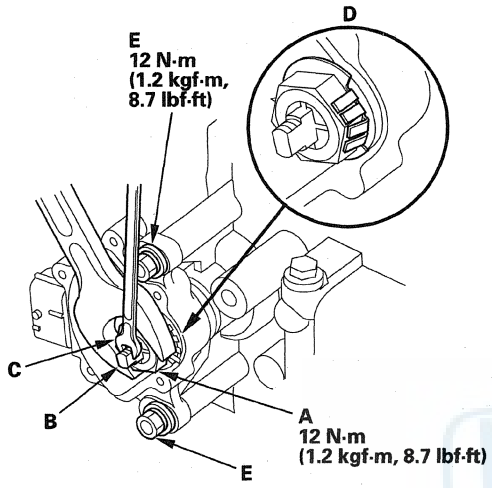

16. Tighten the bolts (E) securing the transmission range switch to 12 N·m (1.2 kgf·m, 8.7 lbf·ft).

17. Install the control lever (A), spring washer (B), lock washer (C), and locknut (D) on the control shaft (E).

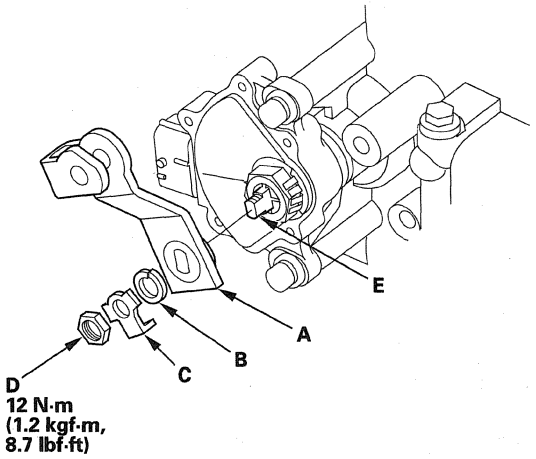

18. Check the connectors for rust, dirt, or oil, and clean or repair if necessary, then connect the connector securely.

19. Apply molybdenum grease to the hole in the bushing in the shift cable end. Attach the shift cable end to the control lever, then insert the control pin into the control lever hole through the shift cable end, and secure the control pin with the spring clip/ washer.

20. Secure the shift cable bracket with the nuts.

21. Install the battery base.

22. Install the air cleaner (see page 11-366).

23. Do the battery installation procedure (see page 22-92).

24. Turn the ignition switch ON (II). Move the shift lever through all positions, and verify that the transmission range switch matches with the A/T gear position indicator.

25. Check that the engine starts in P and N, and does not start in any other shift lever position.

26. Check that the back-up lights come on when the shift lever is in R.

27. Raise the vehicle on a lift, allow all four wheels to rotate freely, then start the engine, and check the shift lever operation.

Paddle Shifter + (Upshift Switch) Circuit Troubleshooting

SRS components are located in this area. Review the SRS component locations (see page 24-12) and the precautions and procedures (see page 24-14) in the SRS before doing repair or service.

1. Remove the steering wheel (see page 17-22).
2. Check for continuity between steering switch harness 20P connector terminals No. 7 and No. 15 while pressing and releasing paddle shifter.

STEERING SWITCH HARNESS 20P CONNECTOR

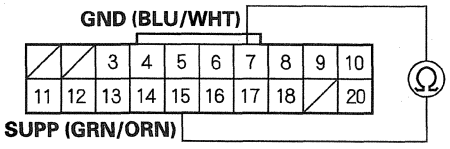

Wire side of female terminals

Is there continuity while pressing the paddle shifter + (upshift switch), and no continuity when the paddle shifter + is released?

YES—Go to step 3.

NO—Go to step 9.

3. Remove the cable reel (see page 24-212).
4. Check for continuity cable reel 20P connector terminal No. 15 and body ground.

CABLE REEL 20P CONNECTOR

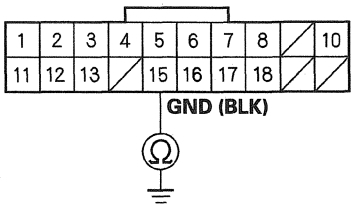

Wire side of female terminals

Is there continuity?

YES—Go to step 5.

NO—Repair an open in the wire between cable reel 20P connector terminal No. 15 and ground (G503), or repair poor ground (G503). ■

5. Check for continuity between cable reel 20P connector terminal No. 5 and body ground.

CABLE REEL 20P CONNECTOR

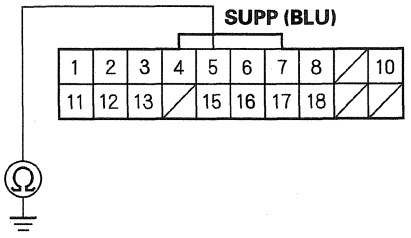

Wire side of female terminals

Is there continuity?

YES—Repair a short in the wire between cable reel 20P connector terminal No. 5 and PCM connector terminal D17. ■

NO—Go to step 6.

6. Turn the ignition switch to ON (II), and shift to S.

7. Measure the voltage between cable reel 20P connector terminals No. 5 and No. 15.

CABLE REEL 20P CONNECTOR

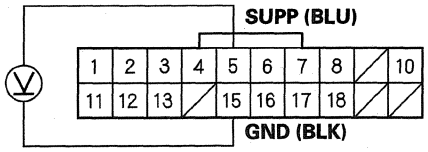

Wire side of female terminals

Is there battery voltage?

YES—Replace the cable reel (see page 24-212).■

NO—Go to step 8.

8. Measure the voltage between PCM connector terminal D17 and body ground.

PCM CONNECTOR D (17P)

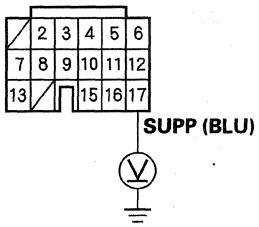

Wire side of female terminals

Is there battery voltage?

YES—Repair an open in the wire between PCM connector terminal D17 and cable reel 20P connector.■

NO—Check for loose or poor connections at PCM connector terminal D17. If the connection is OK, substitute a known-good PCM (see page 11-7) and recheck.■

9. Disconnect the paddle shifter + (upshift switch) connector.

10. Check for continuity between paddle shifter + (upshift switch) connector terminals No. 1 and No. 2 while pressing and releasing the paddle shifter.

PADDLE SHIFTER +
(UPSHIFT SWITCH) CONNECTOR

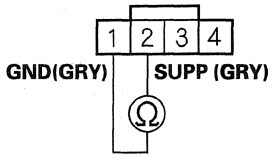

Wire side of female terminals

Is there continuity while pressing the paddle shifter +, and no continuity when the paddle shifter + is released?

YES—Replace the steering switch harness (see page 17-23).■

NO—Replace the paddle shifter + (upshift switch) (see page 14-254).■

Paddle Shifter - (Downshift Switch) Circuit Troubleshooting

SRS components are located in this area. Review the SRS component locations (see page 24-12) and the precautions and procedures (see page 24-14) in the SRS before doing repair or service.

1. Remove the steering wheel (see page 17-22).
2. Check for continuity between steering switch harness 20P connector terminals No. 7 and No. 16 while pressing and releasing paddle shifter.

STEERING SWITCH HARNESS 20P CONNECTOR

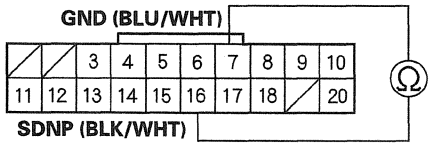

Wire side of female terminals

Is there continuity while pressing the paddle shifter — (downshift switch), and no continuity when the paddle shifter — is released?

YES—Go to step 3.

NO—Go to step 9.

3. Remove the cable reel (see page 24-212).
4. Check for continuity cable reel 20P connector terminal No. 15 and body ground.

CABLE REEL 20P CONNECTOR

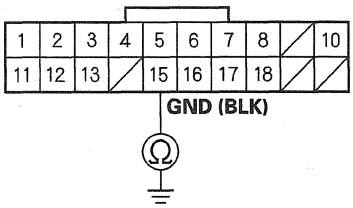

Wire side of female terminals

Is there continuity?

YES—Go to step 5.

NO—Repair an open in the wire between cable reel 20P connector terminal No. 15 and ground (G503), or repair poor ground (G503). ■

5. Check for continuity between cable reel 20P connector terminal No. 6 and body ground.

CABLE REEL 20P CONNECTOR

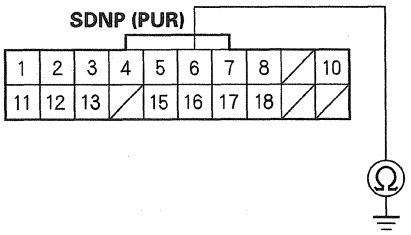

Wire side of female terminals

Is there continuity?

YES—Repair a short in the wire between cable reel 20P connector terminal No. 6 and PCM connector terminal D15. ■

NO—Go to step 6.

6. Turn the ignition switch to ON (II), and shift to S.

7. Measure the voltage between cable reel 20P connector terminals No. 6 and No. 15.

CABLE REEL 20P CONNECTOR

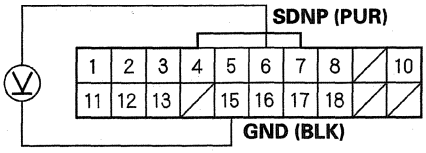

Wire side of female terminals

Is there battery voltage?

YES—Replace the cable reel (see page 24-212). ■

NO—Go to step 8.

8. Measure the voltage between PCM connector terminal D15 and body ground.

PCM CONNECTOR D (17P)

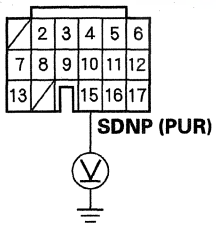

Wire side of female terminals

Is there battery voltage?

YES—Repair an open in the wire between PCM connector terminal D15 and cable reel 20P connector. ■

NO—Check for loose or poor connections at PCM connector terminal D15. If the connection is OK, substitute a known-good PCM (see page 11-7) and recheck. ■

9. Disconnect the paddle shifter — (downshift switch) connector.

10. Check for continuity between paddle shifter — (downshift switch) connector terminals No. 1 and No. 2 while pressing and releasing the paddle shifter.

**PADDLE SHIFTER —
(DOWNSHIFT SWITCH) CONNECTOR**

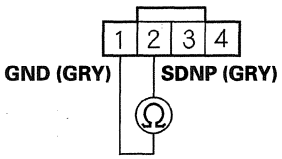

Wire side of female terminals

Is there continuity while pressing the paddle shifter —, and no continuity when the paddle shifter — is released?

YES—Replace the steering switch harness (see page 17-23). ■

NO—Replace the paddle shifter — (downshift switch) (see page 14-254). ■

HONDA

Paddle Shifter Illumination Circuit Troubleshooting

SRS components are located in this area. Review the SRS component locations (see page 24-12), and the precautions and procedures (see page 24-14) in the SRS before doing repair or service.

1. Remove the driver's airbag from the steering wheel (see page 24-197).
2. Disconnect the paddle shifter + (upshift switch) connector or the paddle shifter − (downshift switch) connector.
3. Turn the ignition switch to ON (II), and turn the lighting switch ON.
4. Measure the voltage between paddle shifter (+ or −) connector terminals No. 3 and No. 4.

PADDLE SHIFTER CONNECTOR

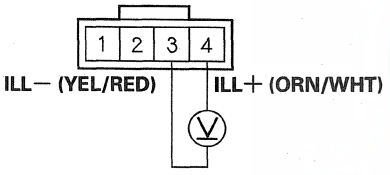

Terminal side of male terminals

Is there battery voltage?

YES−
- Replace the paddle shifter + (upshift switch) (see page 14-254) when you check the paddle shifter + illumination line. ■
- Replace the paddle shifter − (downshift switch) (see page 14-254) when you check the paddle shifter − illumination line. ■

NO—Go to step 5.

5. Turn off the lighting switch, and turn the ignition switch to LOCK (0).
6. Remove the steering wheel (see page 17-22).
7. Check for continuity between steering switch harness 20P connector terminal No. 8 and paddle shifter connector terminal No. 3, and between 20P connector terminal No. 9 and paddle shifter connector terminal No. 4.

PADDLE SHIFTER CONNECTOR

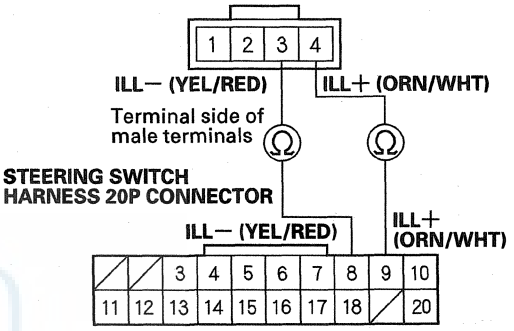

Wire side of female terminals

Are there continuity?

YES—Go to step 8.

NO—Replace the steering switch harness (see page 17-23). ■

8. Remove the cable reel (see page 24-212).

9. Turn the ignition switch to ON (II), and turn the lighting switch ON.

10. Measure the voltage between cable reel 20P connector terminals No. 16 and No. 17.

CABLE REEL 20P CONNECTOR

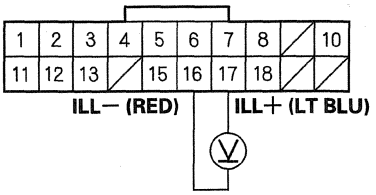

Wire side of female terminals

Is there battery voltage?

YES—Replace the cable reel (see page 24-212). ■

NO—Go to step 11.

11. Measure the voltage between cable reel 20P connector terminal No. 17 and body ground.

CABLE REEL 20P CONNECTOR

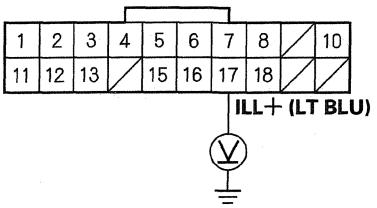

Wire side of female terminals

Is there battery voltage?

YES—Repair an open in the wire between cable reel 20P connector terminal No. 16 and gauge control module. ■

NO—Check for a blown No. 7 (7.5 A) fuse in the passenger's under-dash fuse/relay box. If the fuse is OK, repair an open or a short in the wire between cable reel 20P connector terminal No. 17 and the passenger's under-dash fuse/relay box. ■

HONDA

Paddle Shifter + (Upshift Switch) or Paddle Shifter - (Downshift Switch) Replacement

SRS components are located in this area. Review the SRS component locations (see page 24-12) and the precautions and procedures (see page 24-14) in the SRS before doing repair or service.

1. Remove the steering wheel (see page 17-22).
2. Remove the steering wheel rear cover (A).

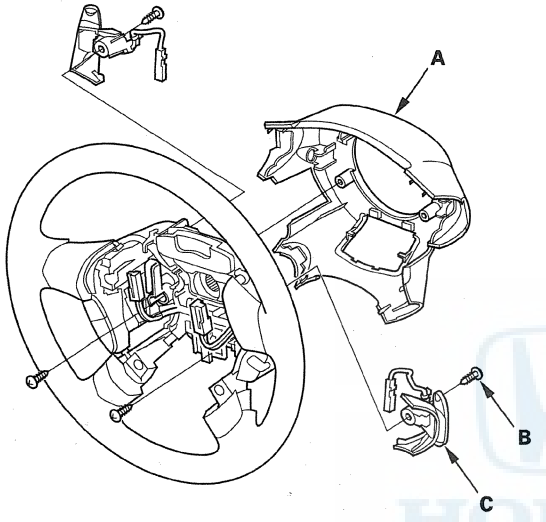

3. Remove the paddle shifter + (upshift switch) or the paddle shifter − (downshift switch) connector from its holder, and disconnect the connector.
4. Remove the screw (B) securing the paddle shifter + or paddle shifter − (C), then remove and replace the paddle shifter + or paddle shifter −.
5. Install the new paddle shifter + or paddle shifter − with the screw, connect the connector, and install the connector in the holder.
6. Install the steering wheel rear cover.
7. Install the steering wheel (see page 17-24).

Component Location Index

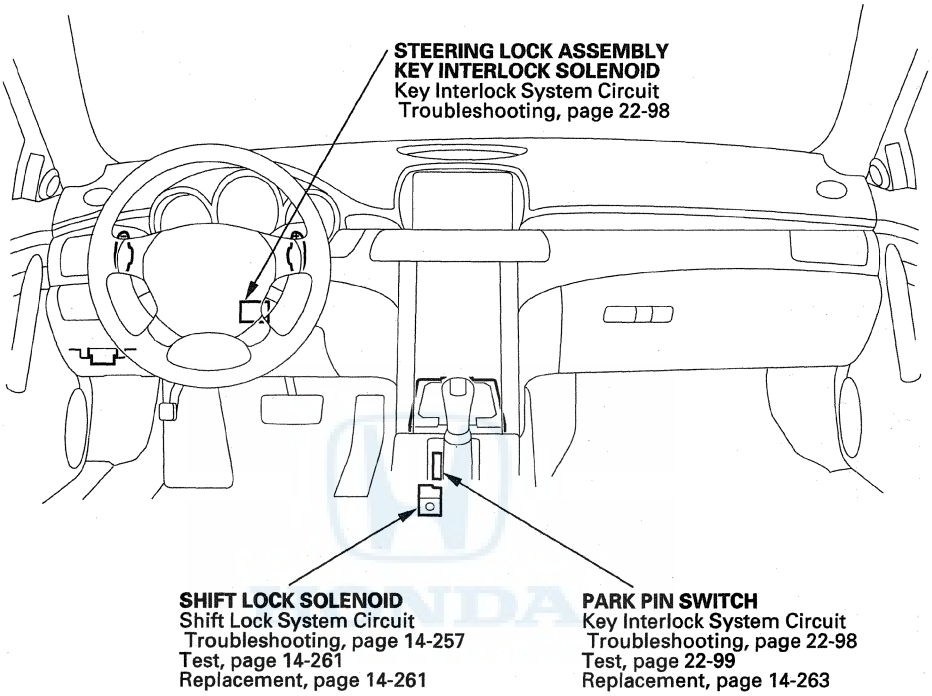

A/T Interlock System

Circuit Diagram

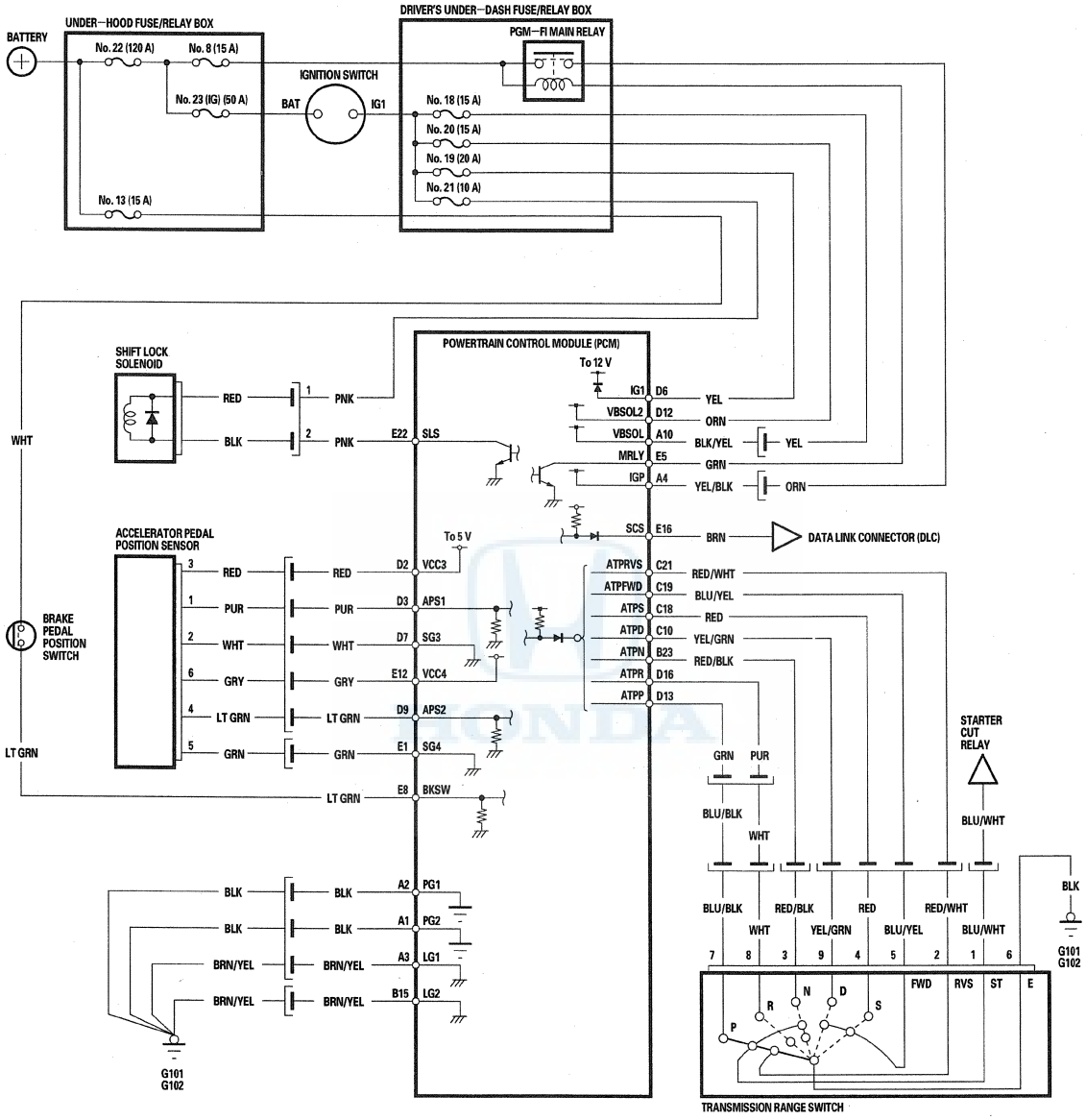

PCM Connector Terminal Locations

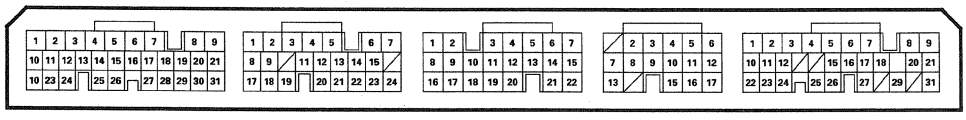

A (31P) B (24P) C (22P) D (17P) E (31P)

Wire side of female terminals

Shift Lock System Circuit Troubleshooting

1. Connect the HDS to the DLC.
2. Turn the ignition switch to ON (II). Make sure the HDS communicates with the PCM. If it does not, go to the DLC circuit troubleshooting (see page 11-211).
3. Select Shift Lock Solenoid Test in the Miscellaneous Test Menu, and check that the shift lock solenoid operates with the HDS.

   Does the shift lock solenoid work properly?

   YES—Go to step 4.

   NO—Go to step 7.
4. Check the Brake Switch signal with the HDS in the A/T data list while pressing and releasing the brake pedal.

   Does the brake switch signal change from on to off while pressing and releasing the brake pedal?

   YES—Go to step 5.

   NO—Troubleshoot the brake pedal position switch signal circuit (see page 11-311). ■
5. Check the ATP Switch signal with the HDS in the A/T data list. The shift lever must be in P.

   Is the ATP Switch ON?

   YES—Go to step 6.

   NO—Go to step 20.
6. Check the accelerator pedal position (APP) sensor A with the HDS in the A/T data list. Do not press the accelerator.

   Is the APP sensor A opening 5 % or more, or the APP sensor A voltage 1.16 V or higher?

   YES—Check the APP sensor (see page 11-281). ■

   NO—Update the PCM if it does not have the latest software (see page 11-230), or substitute a known-good PCM (see page 11-7), and recheck. If the symptom goes away with a known-good PCM, replace the original PCM (see page 11-232). ■
7. Turn the ignition switch to LOCK (0).
8. Remove the center console (see page 20-92).
9. Disconnect the shift lock solenoid connector.
10. Turn the ignition switch to ON (II).
11. Measure the voltage between shift lock solenoid connector terminal No. 1 and body ground.

SHIFT LOCK SOLENOID CONNECTOR

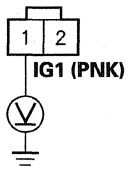

Wire side of female terminals

Is there battery voltage?

YES—Go to step 12.

NO—Check for a blown No. 21 (10 A) fuse in the driver's under-dash fuse/relay box. If the fuse is OK, repair an open or a short in the wire between the shift lock solenoid connector and the driver's under-dash fuse/relay box. ■

(cont'd)

Shift Lock System Circuit Troubleshooting (cont'd)

12. Shift to P, and press the brake pedal. Do not press the accelerator.

13. Measure the voltage between shift lock solenoid connector terminals No. 1 and No. 2 while pressing the brake pedal.

SHIFT LOCK SOLENOID CONNECTOR

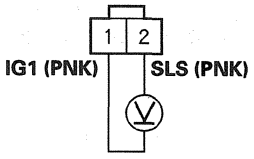

Wire side of female terminals

Is there battery voltage?

YES—Go to step 14.

NO—Go to step 16.

14. Release the brake pedal, and measure the voltage between shift lock solenoid connector terminals No. 1 and No. 2. The shift lever must be in P.

SHIFT LOCK SOLENOID CONNECTOR

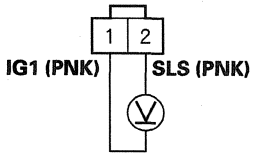

Wire side of female terminals

Is there battery voltage?

YES—Repair a short in the wire between PCM connector terminal E22 and the shift lock solenoid connector. ■

NO—Go to step 15.

15. Connect a jumper wire from the negative battery terminal to shift lock solenoid connector terminal No. 2, and connect another jumper wire from the positive battery terminal to connector terminal No. 1, then check that the shift lock solenoid operates.

NOTE: Do not connect the positive battery terminal to the connector terminal No. 2 or you will damage the diode inside the shift lock solenoid.

SHIFT LOCK SOLENOID CONNECTOR

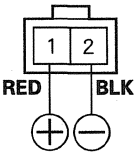

Terminal side of male terminals

Does the shift lock solenoid operate properly?

YES—Check the shift lock mechanism. Replace the shift lock stop and stop cushion (see page 14-262), if the shift lock stop is worn or stuck. ■

NO—Replace the shift lock solenoid (see page 14-261). ■

16. Turn the ignition switch to LOCK (0).

17. Jump the SCS line with the HDS.

18. Disconnect PCM connector E (31P).

19. Check for continuity between PCM connector terminal E22 and shift lock solenoid connector terminal No. 2.

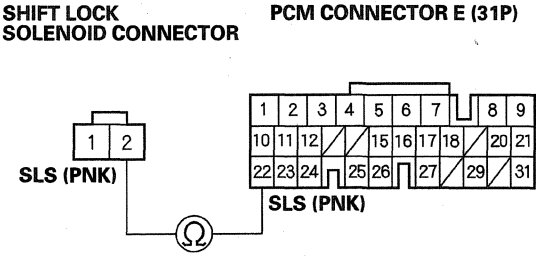

Wire side of female terminals

Is there continuity?

YES—Update the PCM if it does not have the latest software (see page 11-230), or substitute a known-good PCM (see page 11-7), and recheck. If the symptom goes away with a known-good PCM, replace the original PCM (see page 11-232). ■

NO—Repair an open in the wire between PCM connector terminal E22 and shift lock solenoid connector. ■

20. Turn the ignition switch to LOCK (0).

21. Disconnect the transmission range switch connector.

22. Check for continuity between transmission range switch connector terminal No. 6 and body ground.

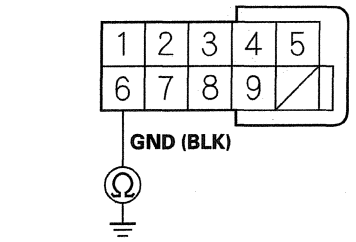

Wire side of female terminals

Is there continuity?

YES—Go to step 23.

NO—Repair an open in the wire between transmission range switch and ground (G101, G102), or repair poor ground (G101, G102). ■

(cont'd)

Shift Lock System Circuit Troubleshooting (cont'd)

23. Turn the ignition switch to ON (II).

24. Measure the voltage between transmission range switch connector terminals No. 6 and No. 7.

TRANSMISSION RANGE SWITCH CONNECTOR

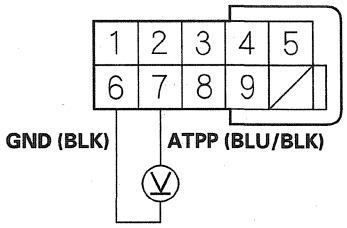

Wire side of female terminals

Is there battery voltage?

YES—Go to step 25.

NO—Repair an open in the wire between PCM connector terminal D13 and the transmission range switch. ■

25. Check for continuity between transmission range switch connector terminals No. 6 and No. 7 in all five shift lever position.

TRANSMISSION RANGE SWITCH CONNECTOR

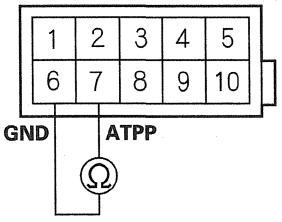

Terminal side of male terminals

Is there continuity while the shift lever is in P and no continuity while the shift lever is in R, N, D, and S?

YES—Update the PCM if it does not have the latest software (see page 11-230), or substitute a known-good PCM (see page 11-7), and recheck. If the symptom goes away with a known-good PCM, replace the original PCM (see page 11-232). ■

NO—Replace the transmission range switch (see page 14-245). ■

Shift Lock Solenoid Test

1. Connect the HDS to the DLC (A).
2. Turn the ignition switch to ON (II). Make sure the HDS communicates with the PCM. If it does not, go to the DLC circuit troubleshooting (see page 11-211).

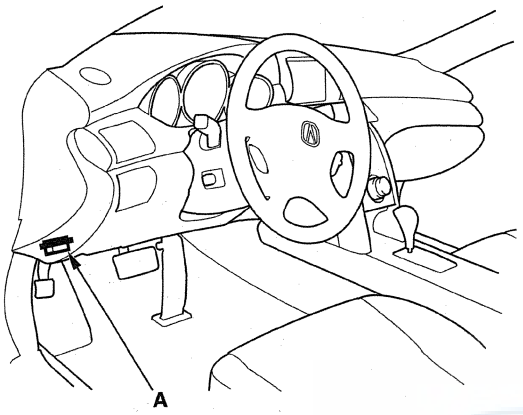

3. Select Shift Lock Solenoid Test in the Miscellaneous Test Menu, and check that the shift lock solenoid operates with the HDS.
4. Check that the shift lever can be moved out of P when Shift Lock Solenoid: ON. Move the shift lever back in P, and make sure it locks with Shift Lock Solenoid: OFF.
5. Check that the shift lock releases when the shift lock release is pushed, and check that it locks when the shift lock release is released.
6. If the shift lock solenoid works improperly, troubleshoot shift lock system circuit (see page 14-257).

Shift Lock Solenoid Replacement

1. Remove the center console (see page 20-92).
2. Move the A/T gear position indicator panel (A) up from the shift lever bracket by releasing the locks, and remove the indicator light socket (B) from the indicator panel.

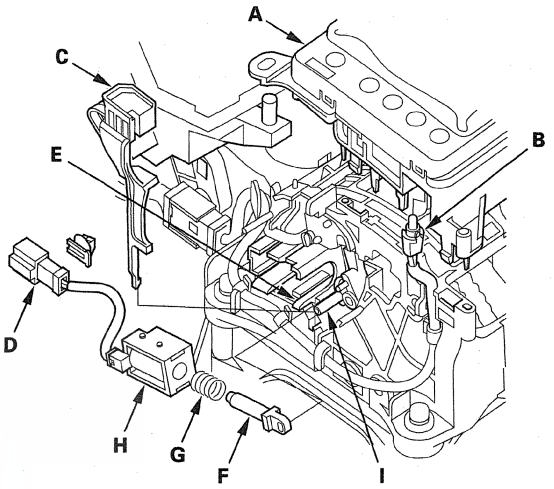

3. Remove the shift lock release (C).
4. Remove the shift lock solenoid connector (D) from the shift lever bracket.
5. Release the lock tab (E) retaining the shift lock solenoid to slide the shift lock solenoid out.
6. Install the shift lock solenoid plunger (F) and plunger spring (G) in the new shift lock solenoid (H).
7. Apply silicone grease to the tip of the shift lock stop (I) and solenoid plunger. Keep the connector terminals free of silicone grease.
8. Install the new shift lock solenoid assembly by aligning the joint of the shift lock solenoid plunger with the tip of the shift lock stop.
9. Install the shift lock solenoid connector on the shift lever bracket.
10. Install the shift lock release.

(cont'd)

Shift Lock Solenoid Replacement (cont'd)

11. Install the A/T gear position indicator panel on the shift lever bracket by aligning the positioning holes with the tips on the console panel.
12. Install the A/T gear position indicator panel light socket in the indicator panel.
13. Install the center console (see page 20-92).

Shift Lock Stop, Shift Lock Stop Cushion Replacement

1. Remove the shift lock solenoid assembly (see page 14-261).
2. Remove the shift lock stop (A) and shift lock stop cushion (B), and replace the shift lock stop and/or shift lock stop cushion.

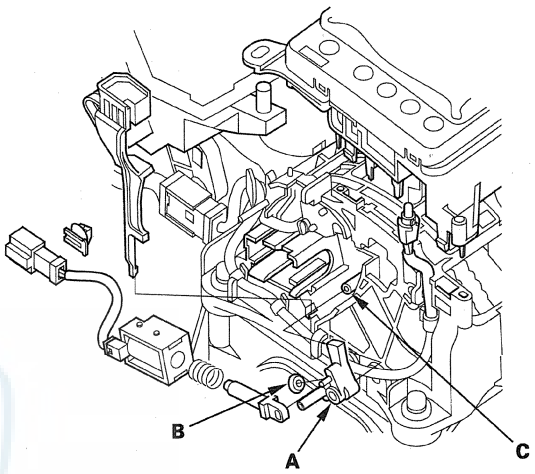

3. Apply silicone grease to the pin (C) on the shift lever bracket base, and install the shift lock stop over the pin. Keep the connector terminals free of silicone grease.
4. Install the shift lock solenoid assembly (see page 14-261).

Shift Lock Release Replacement

1. Remove the center console (see page 20-92).
2. Move the A/T gear position indicator panel (A) up from the shift lever bracket by releasing the locks, and remove the indicator light socket (B) from the indicator panel.

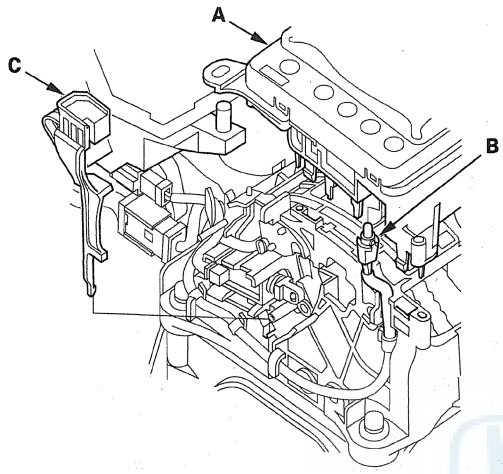

3. Remove the shift lock release (C), and replace it.
4. Install the shift lock release.
5. Install the A/T gear position indicator panel on the shift lever bracket by aligning the positioning holes with the tips on the console panel.
6. Install the A/T gear position indicator panel light socket in the indicator panel.
7. Install the center console (see page 20-92).

Park Pin Switch Replacement

NOTE: The park pin switch is installed in the shift lever bracket, and not available separately from the shift lever bracket; replace the park pin switch and the shift lever bracket.

1. Remove the shift lever (see page 14-230).
2. Disassemble the shift lever (see page 14-233).
3. Replace the park pin switch and the shift lever bracket.
4. Assemble the shift lever.
5. Install the shift lever (see page 14-232).

Transmission Disassembly

Special Tools Required
Mainshaft holder 07GAB-PF50101 or 07GAB-PF50100

1. Remove the ATF dipstick (A) and the dipstick tube (B).

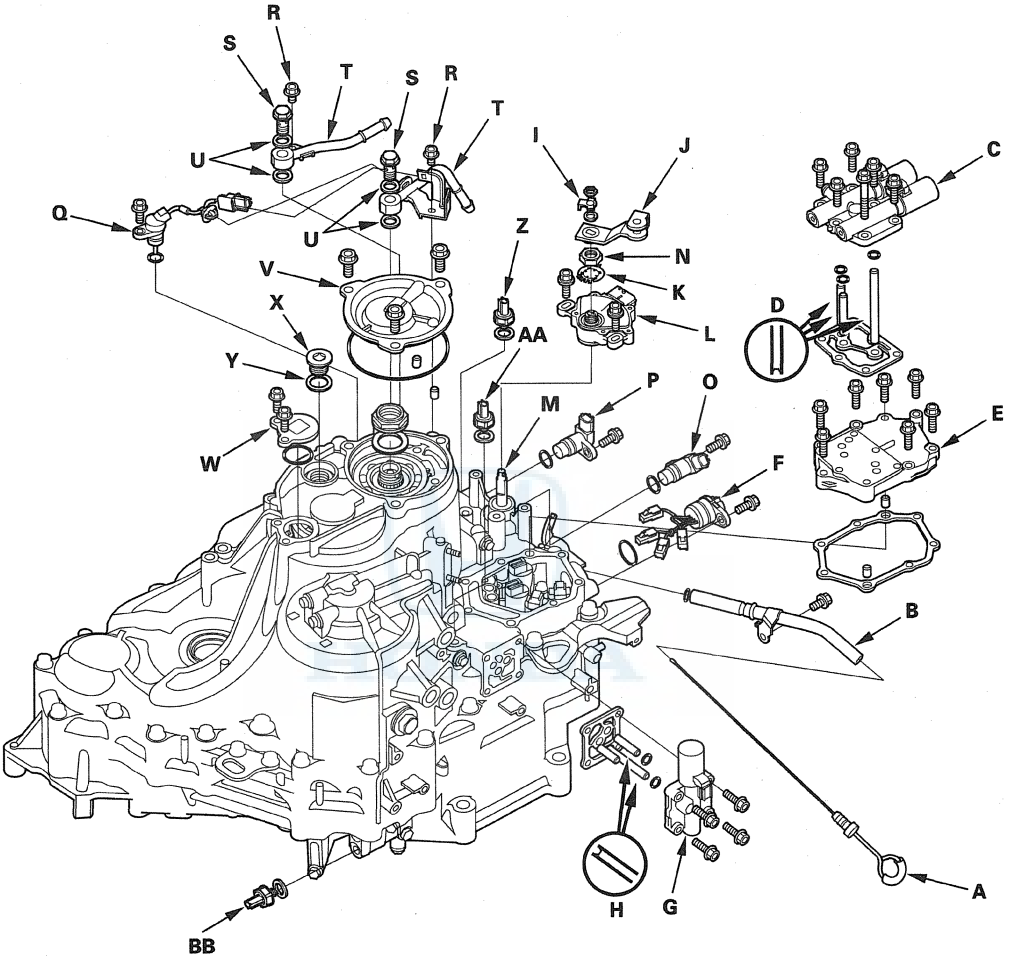

2. Remove A/T clutch pressure control solenoid valves A and B (C) (six bolts), ATF feed pipes (D) (three), O-rings (three), and gasket.

3. Remove the solenoid valve cover (E) (seven bolts), dowel pins (two), and gasket.

4. Disconnect the solenoid valve connectors, then remove the solenoid harness connector (F).

5. Remove A/T clutch pressure control solenoid valve C (G) (four bolts), ATF feed pipes (H) (three), O-rings (two), and gasket.

6. Pry the lock tab of the lock washer (I) on the control lever (J), and remove the nut, lock washer, spring washer, and control lever.

7. Pry the lock tabs of the lock washer (K) on the transmission range switch (L), hold the control shaft (M) with a 6.0 mm wrench, and loosen the locknut (N).

8. Remove the locknut and lock washer, then remove the transmission range switch (two bolts).

9. Remove the input shaft (mainshaft) speed sensor (O) and output shaft (countershaft) speed sensor (P).

10. Remove the ATF temperature sensor connector from the clamp bracket on the ATF cooler line, then remove the ATF temperature sensor (Q).

11. Remove the 6.0 mm bolts (R), line bolts (S), ATF cooler lines (T), and sealing washers (U).

12. Remove the end cover (V) (three bolts), snap ring cap (W) (two bolts), sealing plug (X), and washer (Y).

13. Remove the 3rd clutch transmission fluid pressure switch (Z) and sealing washer.

14. Remove the 4th clutch transmission fluid pressure switch (AA) and sealing washer.

15. Remove the 2nd clutch transmission fluid pressure switch (BB) and sealing washer.

16. Slip the mainshaft holder onto the mainshaft.

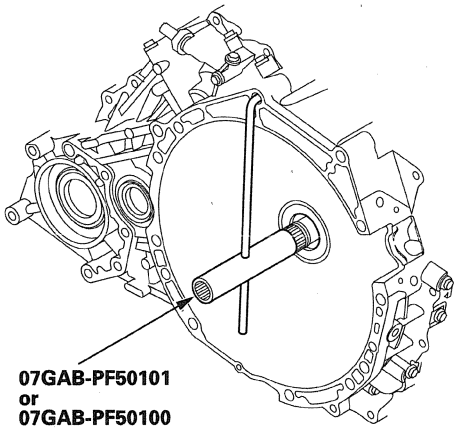

07GAB-PF50101
or
07GAB-PF50100

17. Cut the lock tab (A) off the mainshaft locknut (B) using a chisel (C).

    NOTE: Keep all of the chiseled particles out of the transmission.

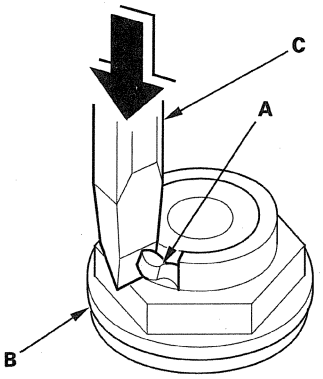

18. Remove the locknut (A) from the mainshaft (B).

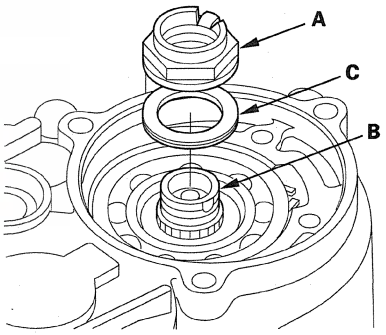

19. Pry the splined washer (C) and remove it.

(cont'd)

Transmission Disassembly (cont'd)

20. Remove the transmission housing mounting bolts (A) (23 bolts), 12 x 1.25 mm bolt (B), transmission hanger (C), and ground terminal bracket (D).

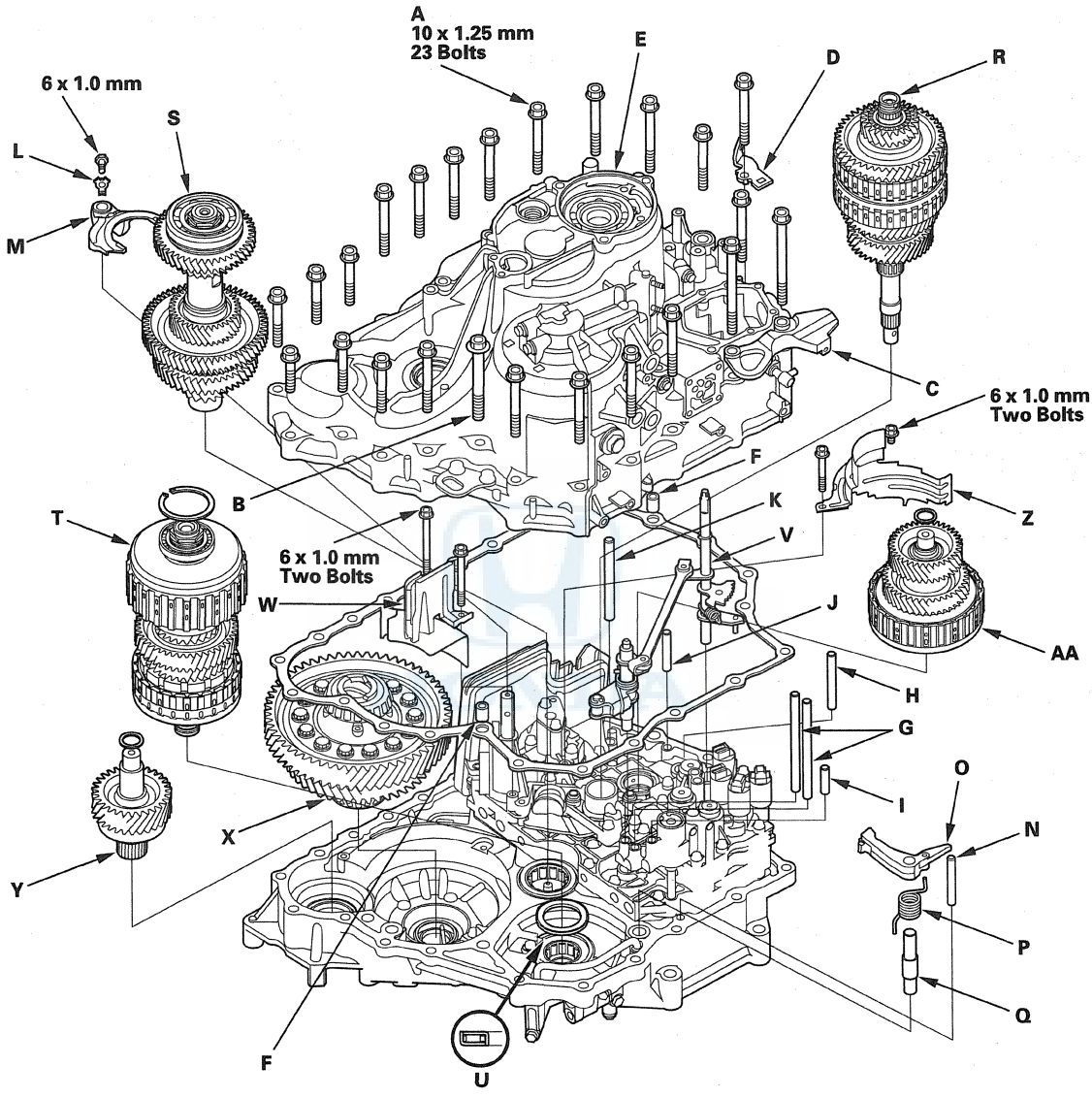

21. While expanding the snap ring of the countershaft bearing with snap ring pliers, lift the transmission housing.

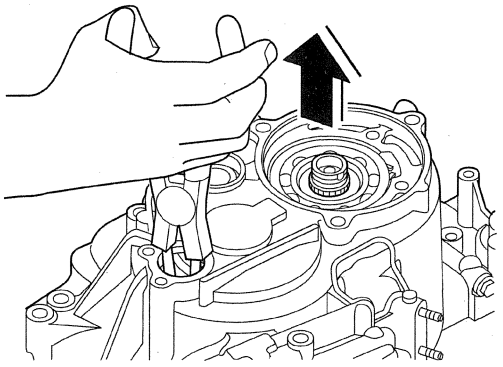

22. Release the pliers, and remove the transmission housing (E), two dowel pins (F), and gasket.

23. Remove the 8 x 151.5 mm ATF feed pipes (G) (two), 8 x 85 mm pipe (H), and 8 x 40 mm pipe (I) from the accumulator body.

24. Remove the 8 x 57.5 mm ATF feed pipe (J) and 10 x 123 mm pipe (K) from the torque converter housing.

25. Remove the mainshaft holder from the mainshaft.

26. Pry the lock tab of the lock washer (L) on the shift fork (M), then remove the bolt and lock washer.

27. Unhook the detent spring from the detent arm.

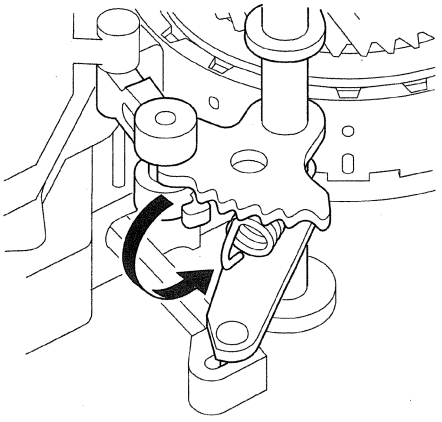

28. Remove the park pawl stop (N), park pawl (O), pawl spring (P), and pawl shaft (Q).

29. Remove the mainshaft (R), countershaft (S), shift fork (M), and secondary shaft (T) together, and remove the needle bearing (U) from the torque converter housing.

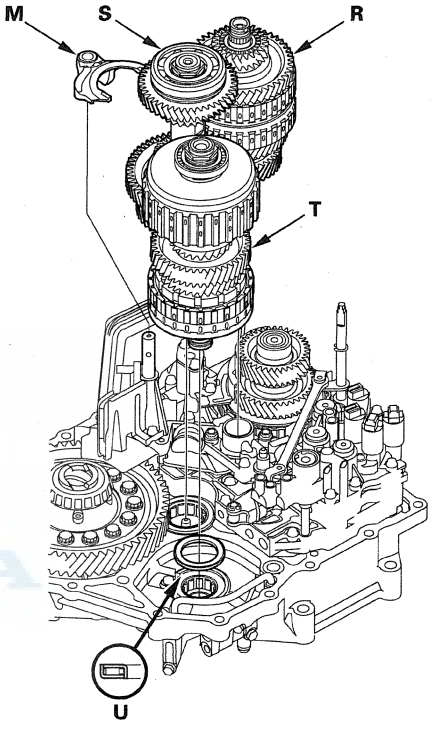

30. Remove the selector control shaft and park lever link (V).

31. Remove the baffle plate (W).

32. Remove the differential assembly (X).

33. Remove the transfer output shaft (Y).

34. Remove the baffle plate (Z).

35. Remove the intermediary shaft (AA).

(cont'd)

Transmission Disassembly (cont'd)

36. Remove the ATF strainer (A) (one bolt).

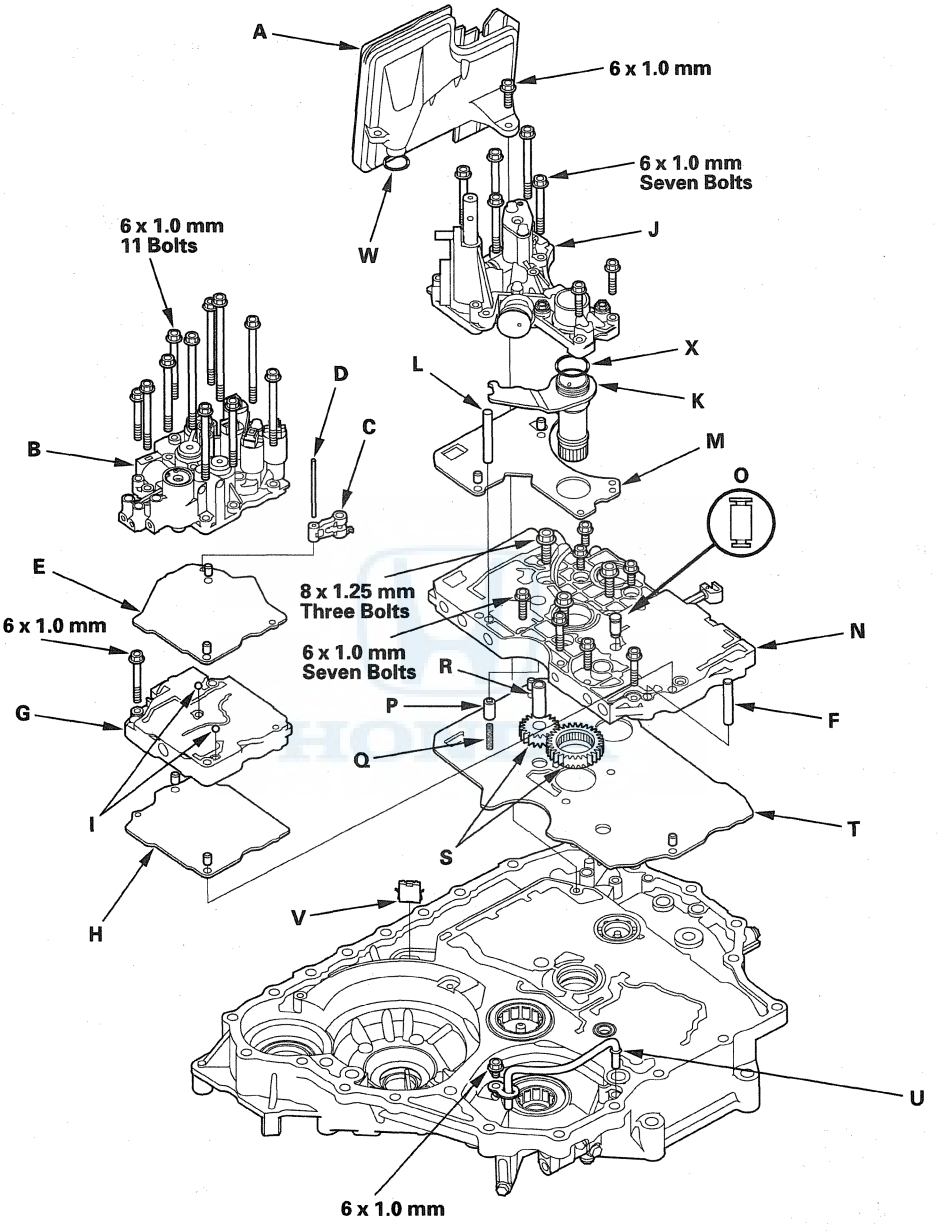

37. Remove the accumulator body (B) (11 bolts), dowel pins (two), detent arm (C), arm shaft (D), and separator plate (E).

38. Remove the 8 x 62 mm ATF feed pipe (F) from the main valve body.

39. Remove the secondary valve body (G) (one bolt), dowel pins (two), and separator plate (H). Do not let the check balls (I) (two) fall out.

40. Remove the regulator valve body (J) (seven bolts), stator shaft (K), stator shaft stop (L), dowel pins (two), and separator plate (M).

41. Remove the main valve body (N) (8 mm: three bolts, 6 mm: seven bolts). Do not let the lubrication check valve (O) fall out.

42. Remove the torque converter check valve (P) and valve spring (Q).

43. Remove the ATF pump driven gear shaft (R), then remove the ATF pump gears (S).

44. Remove the dowel pins (two) and main separator plate (T).

45. Remove the ATF passage pipe (U) (one bolt).

46. Remove the ATF magnet (V), clean it, then reinstall it in the torque converter housing.

47. Remove the O-ring (W) from the ATF strainer, and replace it with a new O-ring when reassembling the transmission.

48. Remove the O-ring (X) from the stator shaft, and replace it with a new O-ring when reassembling the transmission.

49. Clean the inlet opening (A) of the ATF strainer (B) thoroughly with compressed air, then check that it is good condition and that the inlet opening is not clogged.

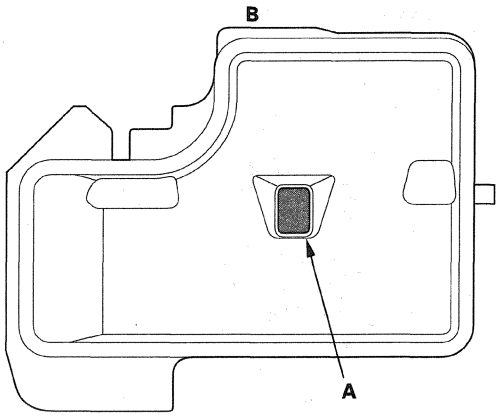

50. Test the ATF strainer by pouring clean ATF through the inlet opening, and replace if it is clogged or damaged.

HONDA

Reverse Idler Gear Removal/ Installation

1. Remove the reverse idler gear assembly (A) from the transmission housing.

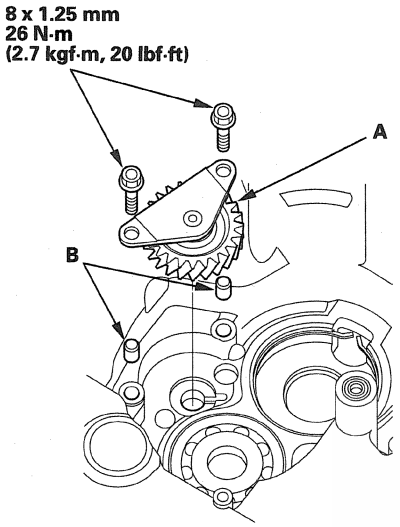

2. Install the reverse idler gear assembly with the two dowel pins (B) in the transmission housing.

Reverse Idler Gear Disassembly/ Inspection/Reassembly

1. Remove the snap ring (A), then remove the thrust washer (B), reverse idler gear (C), needle bearings (D), and thrust washer (E) from the reverse idler gear shaft/holder (F).

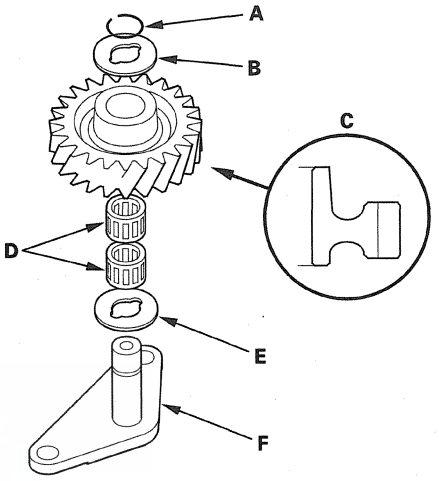

2. Inspect the reverse idler gear and gear shaft for excessive wear and damage.
3. Inspect the needle bearings for galling and rough movement.
4. Install the thrust washer and needle bearings over the gear shaft.
5. Install the reverse idler gear in the direction shown.
6. Install the thrust washer, then install the snap ring to secure the idler gear.

Secondary Shaft ATF Feed Pipe Cap Removal

1. Cover the tip of the 1st-hold clutch ATF feed pipe with a shop rag.
2. Apply air pressure to the ATF feed pipe hole of the 1st-hold clutch pressure circuit, and remove the ATF feed pipe cap from the transmission housing.

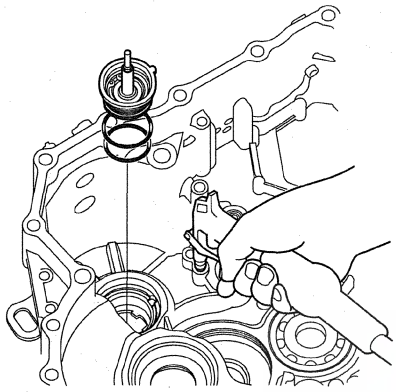

Secondary Shaft ATF Feed Pipe Cap Installation

1. Install the new O-rings (A) on the ATF feed pipe cap (B).

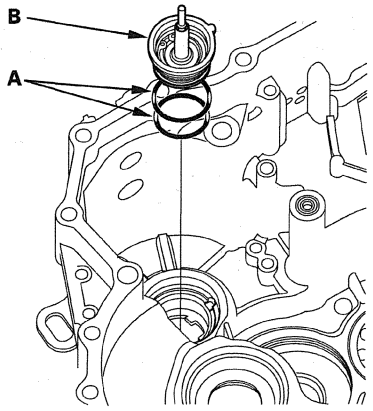

2. Install the ATF feed pipe cap in the transmission housing. Do not pinch the O-rings.

HONDA

Secondary Shaft ATF Feed Pipe Cap, Feed Pipe Replacement

1. Remove the ATF feed pipe cap from the transmission housing (see page 14-271).

2. Remove the snap ring (A) from the feed pipe cap (B), then remove the feed pipe guide (C), O-rings (D) (E), and 1st clutch ATF feed pipe (F).

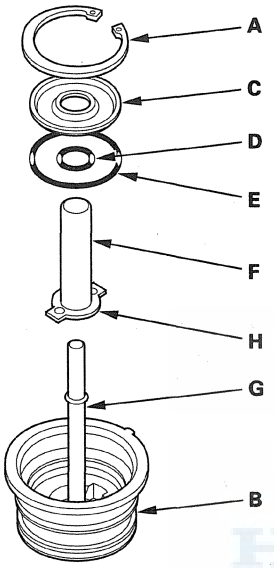

3. Replace the 1st clutch ATF feed pipe or 1st-hold clutch ATF feed pipe/ATF feed pipe cap assembly. The 1st-hold clutch ATF feed pipe/ATF feed pipe cap is not available separately.

4. Install the new O-ring (D) over the 1st clutch ATF feed pipe, then install the feed pipe over the 1st-hold clutch ATF feed pipe (G) while aligning the feed pipe tabs (H) with the guide in the cap.

5. Install the new O-ring (E) in the cap and feed pipe guide, then secure the guide with the snap ring.

ATF Filter Removal/Inspection/ Installation

1. Remove the three 6.0 mm bolts securing the ATF filter cover (A) and ATF pipe (B).

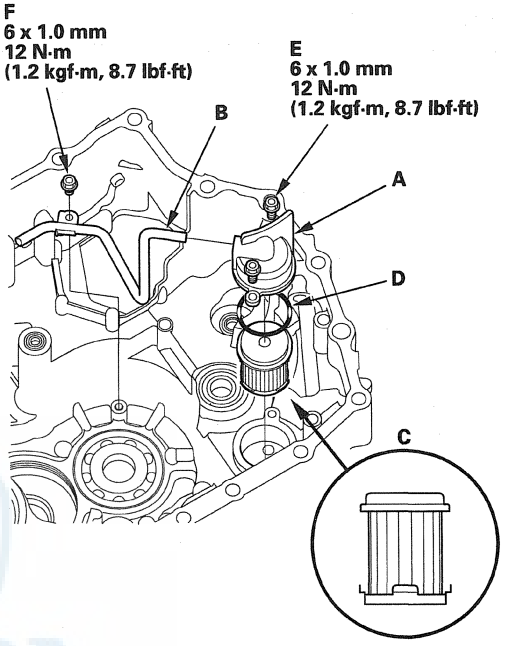

2. Remove the ATF pipe from the ATF filter cover, and remove the ATF filter (C) from the cover.

3. Clean the ATF filter, then check that it is in good condition, and is not clogged. Replace the ATF filter if it is clogged or damaged.

4. Install the ATF filter with the new O-ring (D) in the filter cover, and, install the ATF pipe in the cover, then install them in the transmission housing.

5. Secure the ATF filter cover with the two bolts (E), then secure the ATF pipe with the bolt (F).

Mainshaft Bearing Removal

Special Tools Required
- Driver 07749-0010000
- Attachment, 78 x 80 mm 07NAD-PX40100

1. To remove the mainshaft bearing, expand the snap ring with the snap ring pliers, then push the bearing out. Do not remove the snap ring unless it's necessary to clean the groove in the housing.

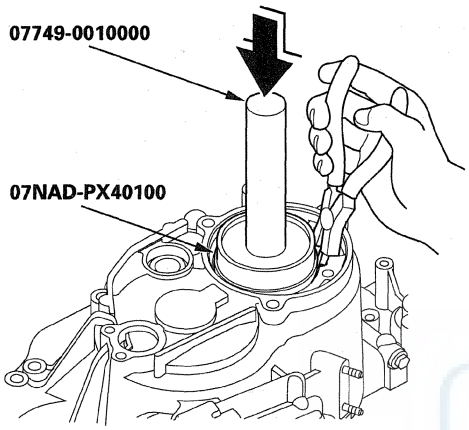

Mainshaft Bearing Installation

Special Tools Required
- Driver 07749-0010000
- Attachment, 78 x 80 mm 07NAD-PX40100

1. Install the bearing in the direction shown.

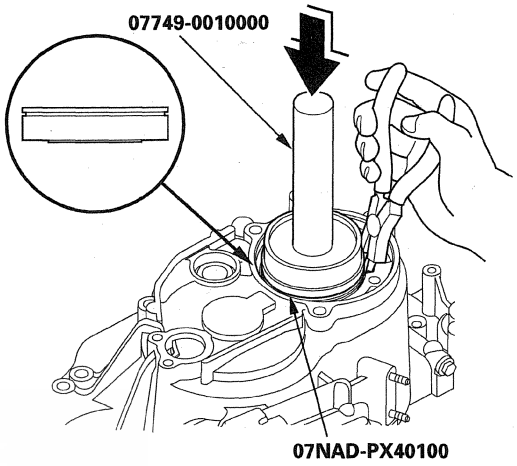

2. Expand the snap ring with the snap ring pliers, and insert the bearing part-way into the housing.

3. Release the pliers, then push the bearing down into the housing until the snap ring snaps in place around it.

4. After installing the bearing, check that the snap ring (A) is seated in the bearing and housing groove, and that the ring end gap (B) is 0—7 mm (0—0.28 in).

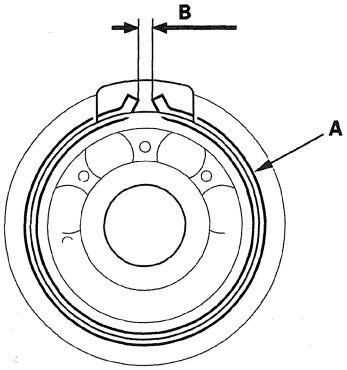

Intermediary Shaft Bearing Replacement

Special Tools Required
- Bearing remover shaft set, 20 mm 07936-3710600
- Bearing remover shaft handle 07936-3710100
- Sliding hammer weight 07741-0010201
- Driver 07749-0010000
- Attachment, 37 x 40 mm 07746-0010200

1. Remove the intermediary shaft bearing from the transmission housing using the bearing remover shaft set (20 mm), the bearing shaft handle, and the sliding hammer weight.

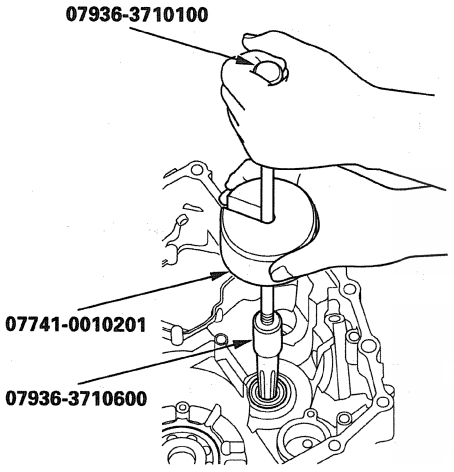

2. Install the new bearing until it bottoms in the transmission housing using the driver and the attachment (37 x 40 mm).

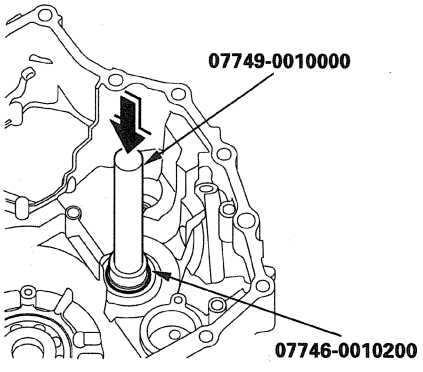

Park Lever Shaft Bearing Replacement

Special Tools Required
- Bearing remover shaft, 10 mm 07936-GE00100
- Bearing remover head, 10 mm 07936-GE00200
- Sliding hammer weight 07741-0010201
- Driver 07749-0010000
- Attachment, 22 x 24 mm 07746-0010800

1. Remove the park lever shaft bearing from the transmission housing using the bearing remover head (10 mm), the bearing remover shaft (10 mm), and the sliding hammer weight.

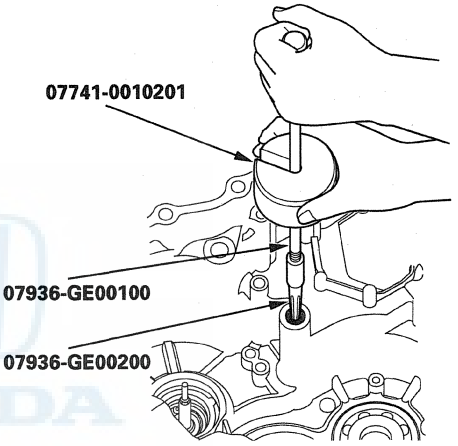

2. Install the new bearing until it bottoms in the transmission housing using the driver and the attachment (22 x 24 mm).

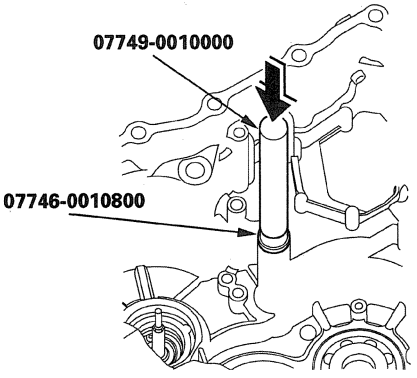

Selector Control Shaft Bearing Replacement

Special Tools Required
- Bearing remover shaft, 10 mm 07936-GE00100
- Bearing remover head, 10 mm 07936-GE00200
- Sliding hammer weight 07741-0010201
- Driver 07749-0010000
- Attachment, 22 x 24 mm 07746-0010800

1. Remove the control shaft bearing from the transmission housing using the bearing remover head (10 mm), the bearing remover shaft (10 mm), and the sliding hammer weight.

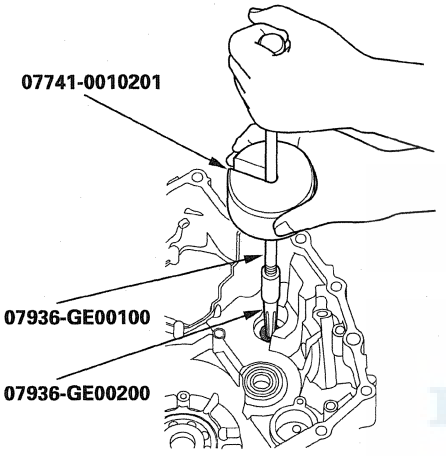

2. Install the new bearing in the transmission housing using the driver and the attachment (22 x 24 mm).

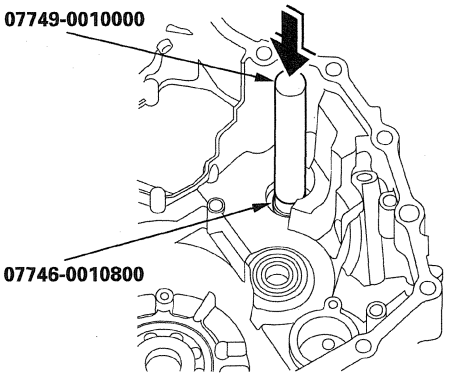

Selector Control Shaft Oil Seal Replacement

Special Tools Required
- Driver 07749-0010000
- Attachment, 22 x 24 mm 07746-0010800

1. Remove the oil seal from the transmission housing.

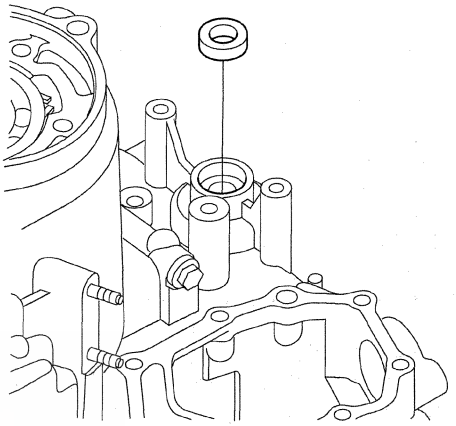

2. Install the new oil seal in the transmission housing using the driver and the attachment (22 x 24 mm).

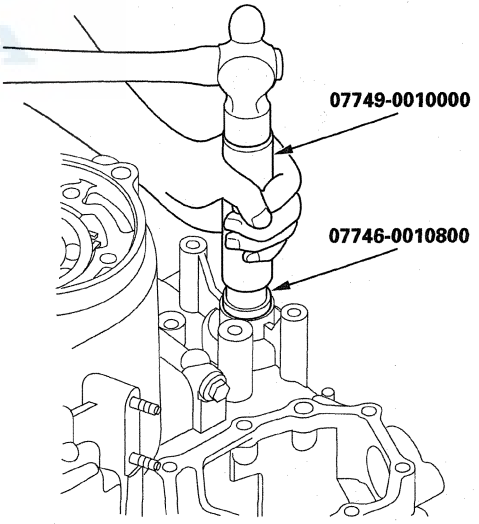

HONDA

Valve Body Repair

NOTE: Valve body repair is only necessary if one or more of the valves in a valve body do not slide smoothly in their bores. Use this procedure to free the valves.

1. Soak a sheet of #600 abrasive paper in ATF for about 30 minutes.
2. Carefully tap the valve body so the sticking valve drops out of its bore. It may be necessary to use a small screwdriver to pry the valve free. Be careful not to scratch the bore with a screwdriver.
3. Inspect the valve for any scuff marks. Use the ATF-soaked #600 paper to polish off any burrs that are on the valve, then wash the valve in solvent and dry it with compressed air.
4. Roll up half of the ATF-soaked #600 paper and insert it in the valve bore of the sticking valve. Twist the paper slightly, so that it unrolls and fits the bore tightly, then polish the bore by twisting the paper as you push it in and out.

   NOTE: The valve body is aluminum and doesn't require much polishing to remove any burrs.

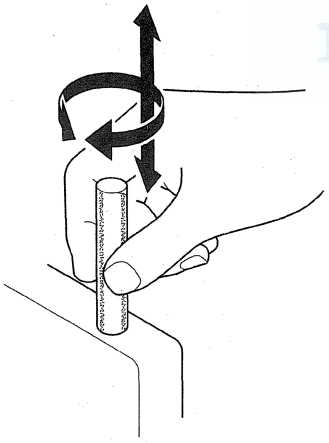

5. Remove the #600 paper. Thoroughly wash the entire valve body in solvent, then dry it with compressed air.
6. Coat the valve with ATF, then drop it into its bore. It should drop to the bottom of the bore under its own weight. If not, repeat steps 4 and 5, then retest. If the valve still sticks, replace the valve body.

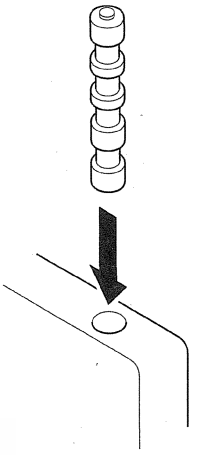

7. Remove the valve, and thoroughly clean it and the valve body with solvent. Dry all parts with compressed air, then reassemble using ATF as a lubricant.

Valve Body Valve Installation

1. Coat all parts with ATF before assembly.

2. Install the valves and springs in the sequence shown for the main valve body (see page 14-278), secondary valve body (see page 14-280), regulator valve body (see page 14-281), and accumulator body (see page 14-282). Refer to the following valve cap illustrations, and install each valve cap so the end shown facing up will be facing the outside of the valve body, then secure the valve cap with the valve cap clip.

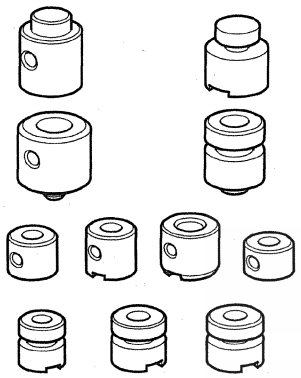

3. Install the valve (A) and valve spring (B) in the valve body. Push the valve spring in with a screwdriver, then install the spring seat (C).

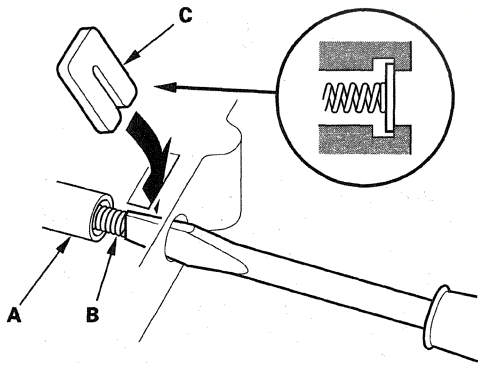

Main Valve Body Disassembly, Inspection, and Reassembly

1. Clean all parts thoroughly in solvent, and dry them with compressed air. Blow out all passages.
2. Inspect the main valve body for scoring and damage.
3. Check all valves for free movement. If any fail to slide freely, refer to valve body repair (see page 14-276).
4. Coat all parts with ATF during assembly.
5. Replace the filter with a new one, and install it and the lubrication check valve in the direction shown.

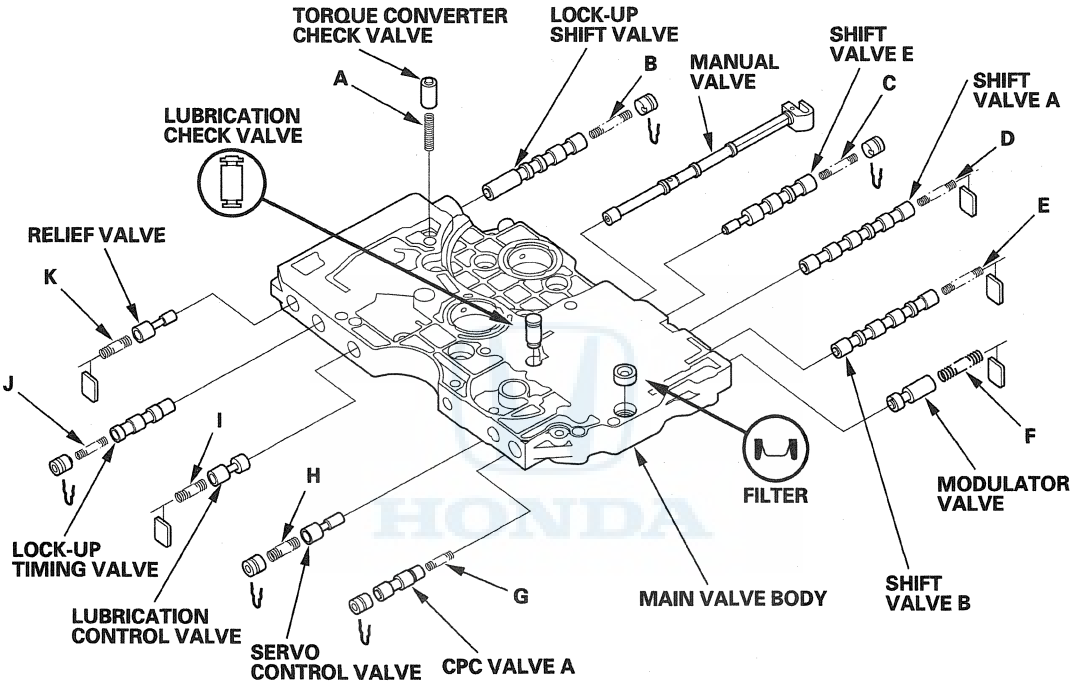

VALVE SPRING SPECIFICATIONS

Valve Springs		Standard (New)-Unit: mm (in)			
		Wire Diameter	O.D.	Free Length	No. of Coils
A	Torque converter check valve spring	1.1 (0.043)	8.6 (0.339)	34.3 (1.350)	10.1
B	Lock-up shift valve spring	1.0 (0.039)	6.6 (0.260)	35.5 (1.398)	18.2
C	Shift valve E spring	0.7 (0.028)	6.6 (0.260)	42.4 (1.669)	17.6
D	Shift valve A spring	0.9 (0.035)	6.6 (0.260)	50.5 (1.988)	23.3
E	Shift valve B spring	0.8 (0.031)	6.6 (0.260)	49.1 (1.933)	21.7
F	Modulator valve spring	1.6 (0.063)	10.4 (0.409)	33.5 (1.319)	9.8
G	CPC valve A spring	0.7 (0.028)	6.1 (0.240)	17.8 (0.701)	7.9
H	Servo control valve spring	0.9 (0.035)	9.6 (0.378)	30.2 (1.189)	8.4
I	Lubrication control valve spring	0.9 (0.035)	8.7 (0.343)	25.0 (0.984)	7.2
J	Lock-up timing valve spring	0.6 (0.024)	6.6 (0.260)	30.9 (1.217)	11.1
K	Relief valve spring	1.0 (0.039)	9.6 (0.378)	28.1 (1.106)	7.7

ATF Pump Inspection

1. Install the ATF pump drive gear (A), driven gear (B), and ATF pump driven gear shaft (C) in the main valve body (D). Lubricate all parts with ATF, and install the ATF pump driven gear with its grooved and chamfered side facing up.

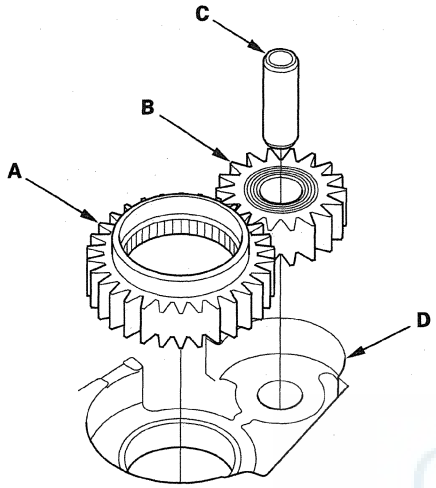

2. Measure the side clearance of the ATF pump drive gear (A) and driven gear (B).

ATF Pump Gears Side (Radial) Clearance
Standard (New):
ATF Pump Drive Gear:
0.210—0.265 mm (0.008—0.010 in)
ATF Pump Driven Gear:
0.070—0.125 mm (0.003—0.005 in)

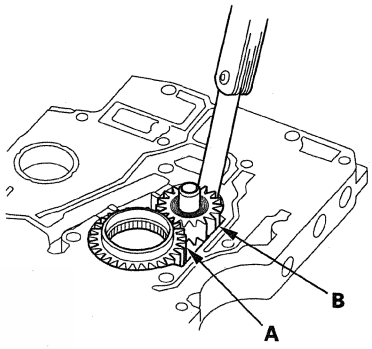

3. Remove the ATF pump driven gear shaft. Measure the thrust clearance between the ATF pump driven gear (A) and the valve body (B) with a straight edge (C) and a feeler gauge (D).

ATF Pump Drive/Driven Gear Thrust (Axial) Clearance:
Standard (New): 0.03—0.06 mm (0.001—0.002 in)
Service Limit: 0.07 mm (0.003 in)

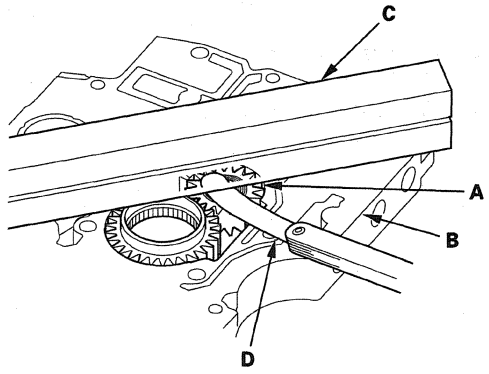

Secondary Valve Body Disassembly, Inspection, and Reassembly

1. Clean all parts thoroughly in solvent, and dry them with compressed air. Blow out all passages.
2. Do not use a magnet to remove the check balls, it may magnetize the check balls.
3. Inspect the secondary valve body for scoring and damage.
4. Check all valves for free movement. If any fail to slide freely, refer to valve body repair (see page 14-276).
5. Coat all parts with ATF during assembly.

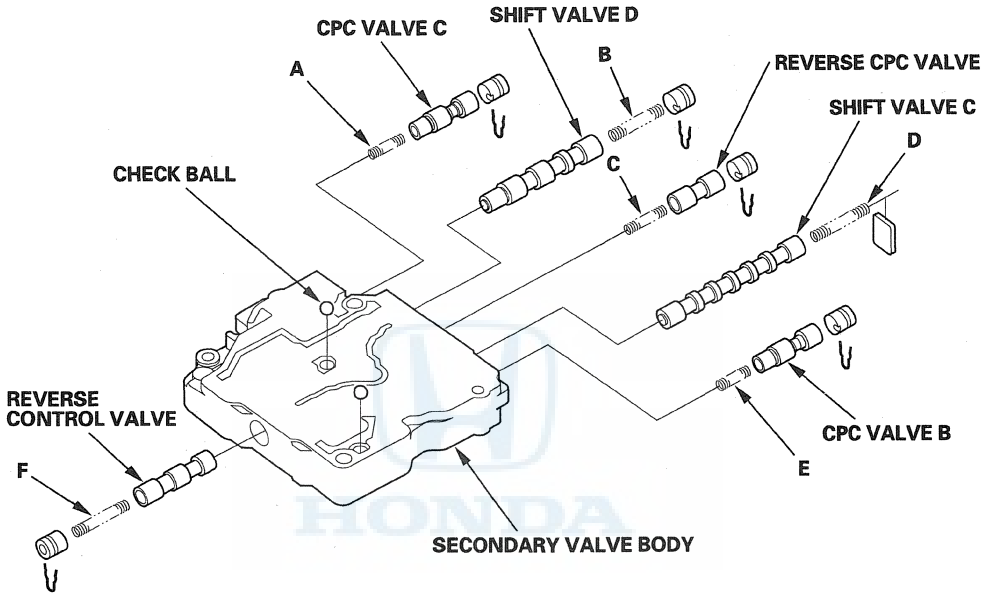

VALVE SPRING SPECIFICATIONS

Valve Springs		Standard (New)-Unit: mm (in)			
		Wire Diameter	O.D.	Free Length	No. of Coils
A	CPC valve C spring	0.7 (0.028)	6.1 (0.240)	17.8 (0.701)	7.9
B	Shift valve D spring	0.7 (0.028)	6.6 (0.260)	42.4 (1.669)	17.6
C	Reverse CPC valve spring	0.8 (0.031)	6.1 (0.240)	24.4 (0.961)	14.6
D	Shift valve C spring	0.8 (0.031)	6.6 (0.260)	49.1 (1.933)	21.7
E	CPC valve B spring	0.7 (0.028)	6.1 (0.240)	17.8 (0.701)	7.9
F	Reverse control valve spring	0.8 (0.031)	6.6 (0.260)	49.1 (1.933)	21.7

Regulator Valve Body Disassembly, Inspection, and Reassembly

1. Clean all parts thoroughly in solvent, and dry them with compressed air. Blow out all passages.
2. Inspect the regulator valve body for scoring and damage.
3. Hold the regulator spring cap in place while removing the stop bolt. The regulator spring cap is spring loaded. Once the stop bolt is removed, release the spring cap slowly so it does not pop out.
4. Check all valves for free movement. If any fail to slide freely, refer to valve body repair (see page 14-276).
5. Coat all parts with ATF during assembly.
6. Align the hole in the regulator spring cap with the stop bolt hole, then press the spring cap into the valve body, and tighten the stop bolt.
7. Install the servo valve with the new O-ring, and 3rd accumulator piston with the new O-ring.

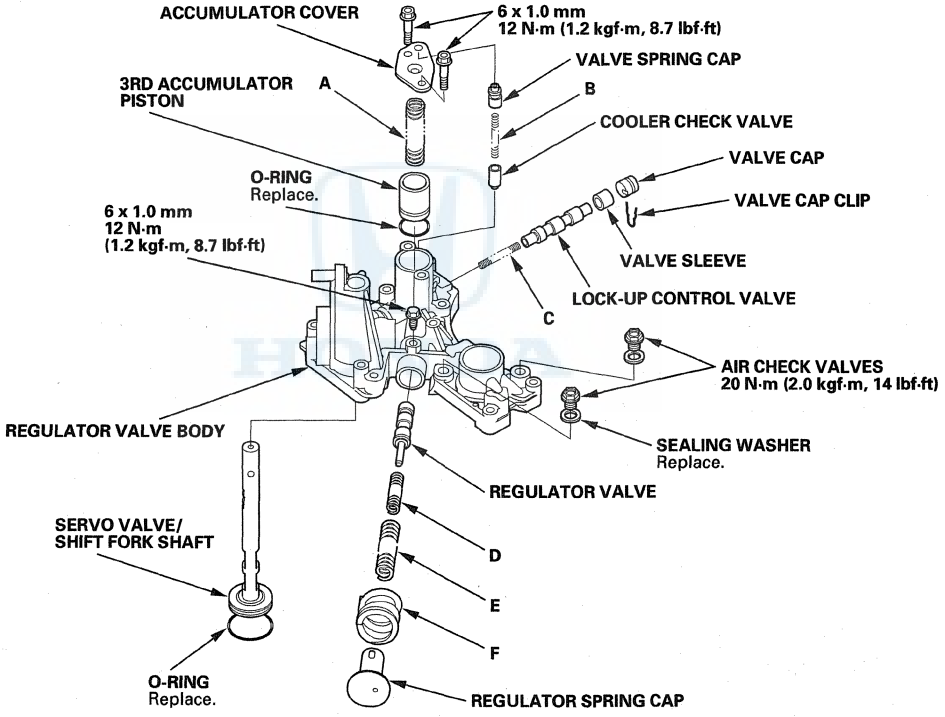

VALVE SPRING SPECIFICATIONS

Valve Springs		Standard (New)-Unit: mm (in)			
		Wire Diameter	O.D.	Free Length	No. of Coils
A	3rd accumulator spring	3.1 (0.122)	19.6 (0.772)	41.4 (1.630)	5.5
B	Cooler check valve spring	0.9 (0.035)	6.7 (0.264)	31.5 (1.240)	14.2
C	Lock-up control valve spring (type A)	0.7 (0.028)	6.6 (0.260)	42.9 (1.689)	14.2
	Lock-up control valve spring (type B)	0.8 (0.031)	6.6 (0.260)	44.3 (1.744)	25.5
D	Regulator valve spring B	1.4 (0.055)	8.8 (0.346)	44.0 (1.732)	12.0
E	Regulator valve spring A	1.85 (0.073)	14.7 (0.579)	86.9 (3.421)	16.2
F	Stator reaction spring	5.5 (0.217)	37.4 (1.472)	30.3 (1.193)	2.1

NOTE: As for the lock-up control valve spring, either type A or type B is applied.

Accumulator Body Disassembly, Inspection, and Reassembly

1. Clean all parts thoroughly in solvent, and dry them with compressed air. Blow out all passages.
2. Inspect the accumulator body for scoring and damage.
3. Coat all parts with ATF during assembly.
4. Replace the O-rings with new ones.

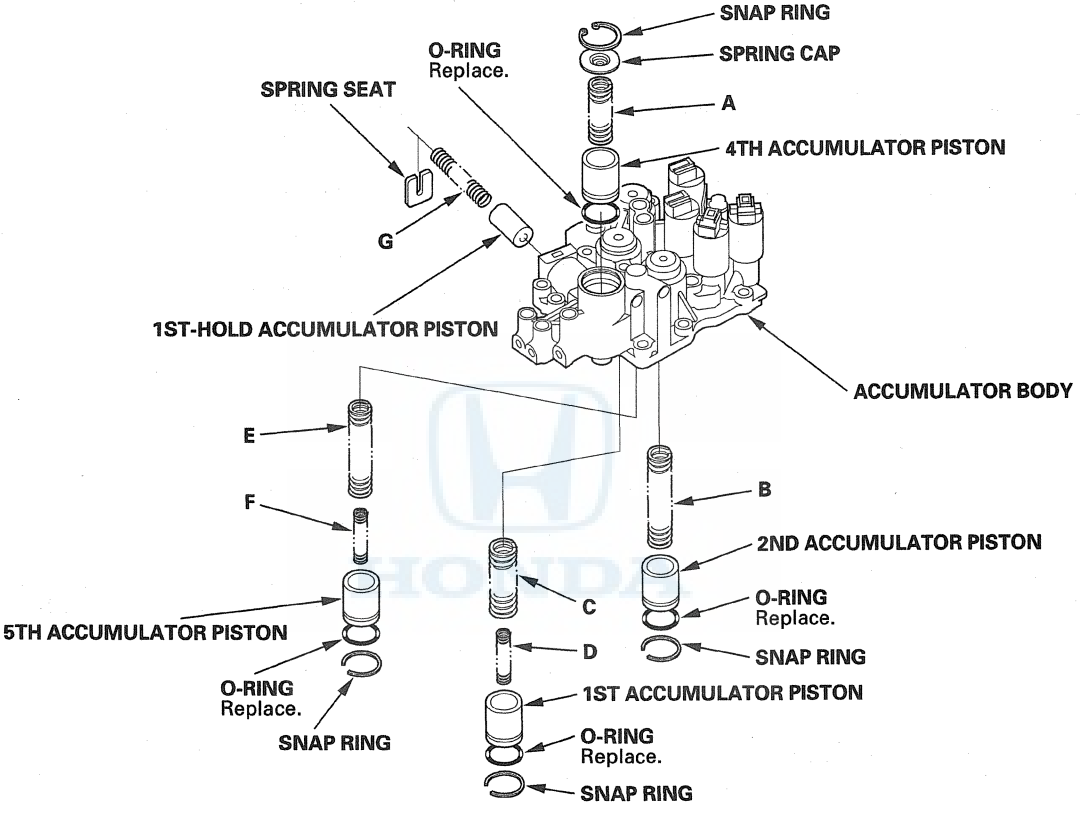

VALVE SPRING SPECIFICATIONS

Valve Springs		Standard: (New)-Unit mm (in)			
		Wire Diameter	O.D.	Free Length	No. of Coils
A	4th accumulator spring	3.3 (0.130)	19.6 (0.772)	39.1 (1.539)	5.8
B	2nd accumulator spring	3.1 (0.122)	19.6 (0.772)	53.4 (2.102)	7.5
C	1st accumulator spring A	2.3 (0.091)	19.6 (0.772)	60.8 (2.394)	9.5
D	1st accumulator spring B	2.5 (0.098)	12.8 (0.504)	46.0 (1.811)	9.5
E	5th accumulator spring A	2.4 (0.094)	19.6 (0.772)	65.5 (2.579)	12.0
F	5th accumulator spring B	2.6 (0.102)	13.2 (0.520)	50.5 (1.988)	10.1
G	1st-hold accumulator spring	2.0 (0.079)	13.1 (0.516)	42.9 (1.689)	9.8

Shift Solenoid Valve Removal and Installation

NOTE: Do not hold the solenoid valve connector to remove and install the shift solenoid valve. Be sure to hold the solenoid valve body.

1. Remove the mounting bolts, then remove the solenoid valves by holding the solenoid valve body.

2. Install the new O-rings (E) on each shift solenoid valve.

   NOTE: If you are installing a new shift solenoid valve, it comes with new O-rings already installed.

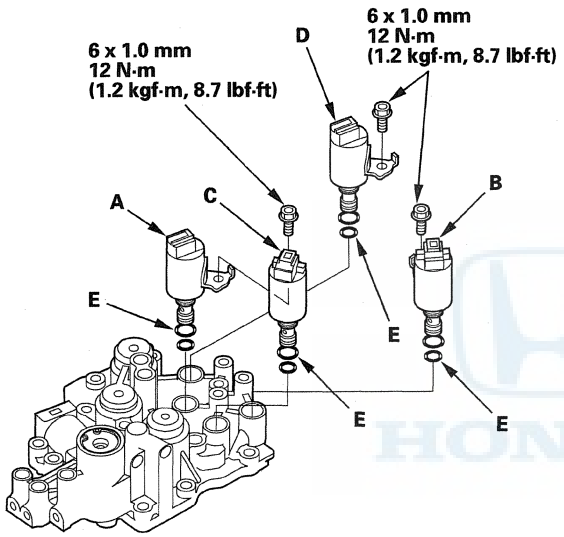

3. Install shift solenoid valve D (black connector) by holding the shift solenoid valve body; be sure the mounting bracket contacts the accumulator body.

4. Install shift solenoid valve A (black connector) by holding the shift solenoid valve body; be sure the mounting bracket contacts the accumulator body.

5. Install shift solenoid valve C (brown connector) by holding the shift solenoid valve body; be sure to position the mounting bracket on top of the bracket of shift solenoid valve A.

   NOTE: Do not install shift solenoid valve C before installing shift solenoid valve A. If shift solenoid valve C is installed before installing shift solenoid valve A, it may damage the hydraulic control system.

6. Install shift solenoid valve B (brown connector) by holding the shift solenoid valve body; be sure the mounting bracket contacts the accumulator body.

Mainshaft Bearing and Oil Seal Replacement

Special Tools Required
- Adjustable bearing puller, 25—40 mm 07736-A01000B or 07736-A01000A
- Sliding hammer weight 07741-0010201
- Driver 07749-0010000
- Attachment, 62 x 68 mm 07746-0010500
- Attachment, 72 x 75 mm 07746-0010600

1. Remove the mainshaft bearing and oil seal using the adjustable bearing remover and the sliding hammer weight.

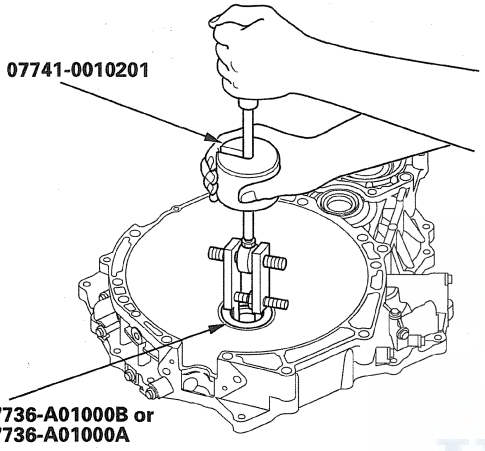

2. Install the new mainshaft bearing until it bottoms in the housing using the driver and the attachment (62 x 68 mm).

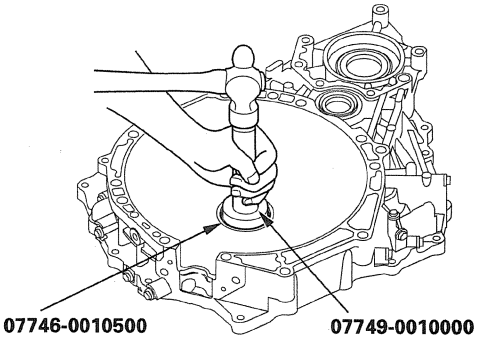

3. Install the new oil seal flush to the housing using the driver and the attachment (72 x 75 mm).

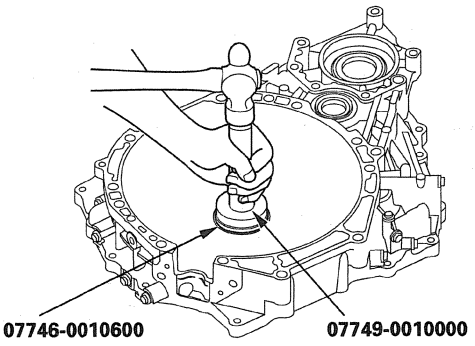

Countershaft Bearing Replacement

Special Tools Required
- Adjustable bearing puller, 25—40 mm 07736-A01000B or 07736-A01000A
- Sliding hammer weight 07741-0010201
- Driver 07749-0010000
- Attachment, 78 x 80 mm 07NAD-PX40100

1. Remove the countershaft bearing from the torque converter housing using the adjustable bearing remover and the sliding hammer weight.

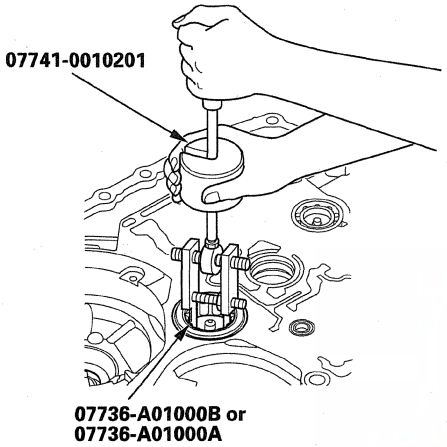

2. Install the ATF guide plate (A) into the housing, then install the new bearing (B) in the direction shown.

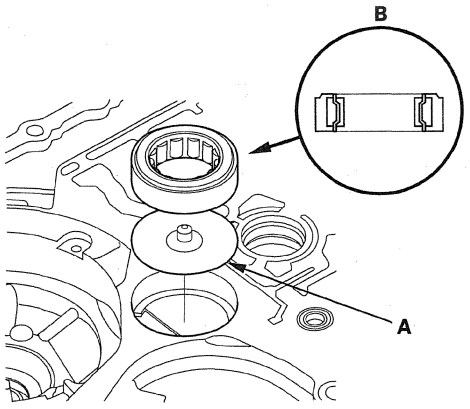

3. Install the bearing (A) in the housing using the driver and the attachment (78 x 80 mm); install the bearing outer notch-cut (B) in depth (C) of 0—0.03 mm (0—0.001 in) below the housing surface (D).

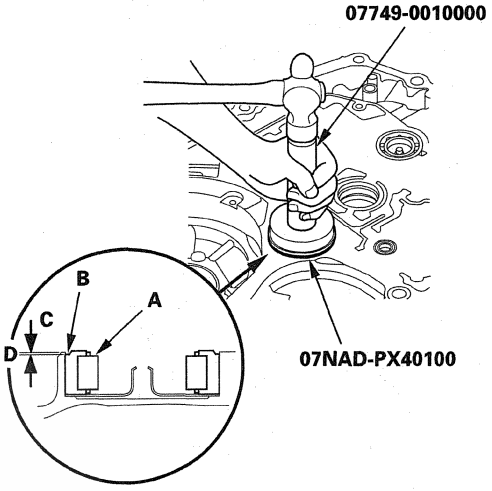

Secondary Shaft Bearing Replacement

Special Tools Required
- Adjustable bearing puller, 25—40 mm 07736-A01000B or 07736-A01000A
- Bearing remover shaft set, 30 mm 07936-8890300
- Bearing remover shaft handle 07936-3710100
- Sliding hammer weight 07741-0010201
- Driver 07749-0010000
- Attachment, 37 x 40 mm 07746-0010200
- Attachment, 62 x 68 mm 07746-0010500

1. Remove the bolt, then remove the lock washer (A) and bearing set plate (B).

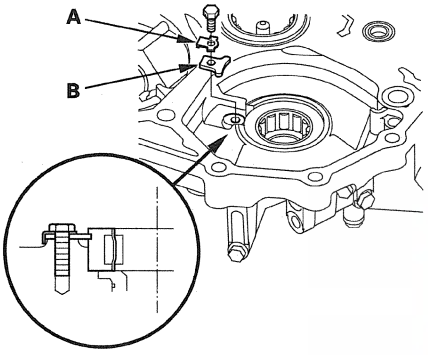

2. Remove the secondary shaft bearing from the torque converter housing using the adjustable bearing remover and the sliding hammer weight.

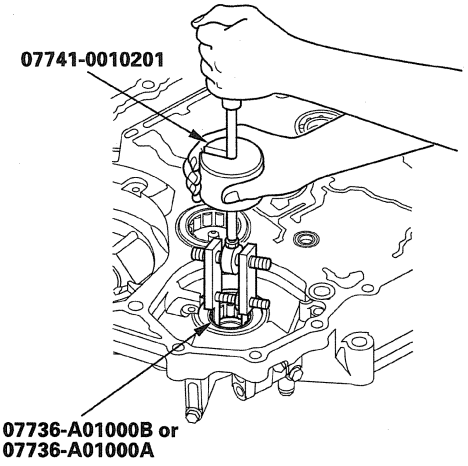

3. Remove the ATF guide collar from the torque converter housing.

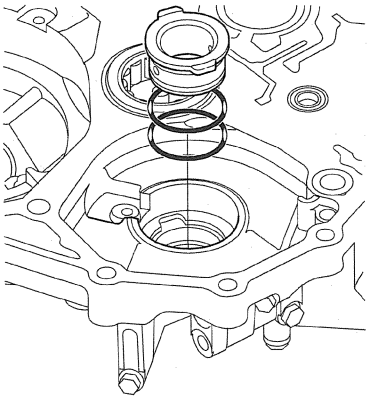

4. Remove the 29 x 39 x 9.5 mm secondary shaft bearing from the torque converter housing using the bearing remover shaft set (30 mm), the bearing remover shaft handle, and the sliding hammer weight.

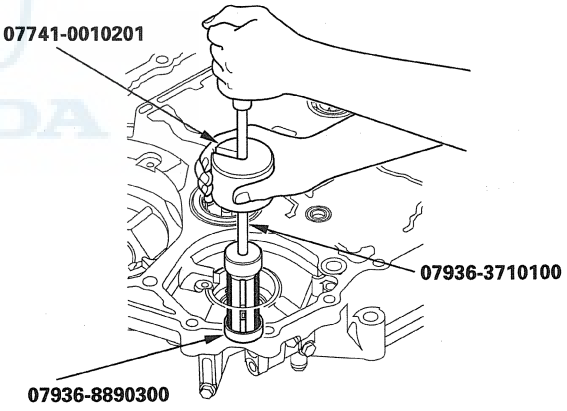

5. Install the 29 x 39 x 9.5 mm bearing into the torque converter housing using the driver and the attachment (37 x 40 mm).

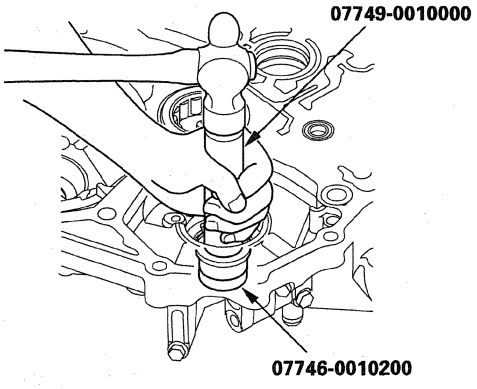

6. Install the new O-rings (A) on the ATF guide collar (B), then install the guide collar in the torque converter housing.

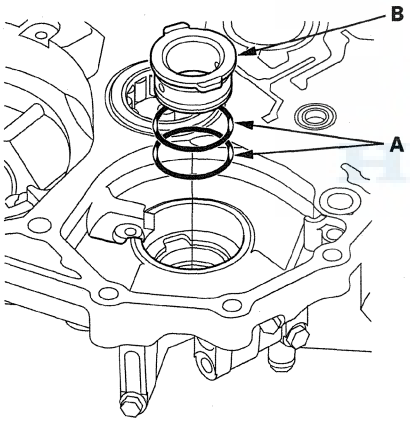

7. Install the bearing in the direction shown in the housing using the driver and the attachment (62 x 68 mm).

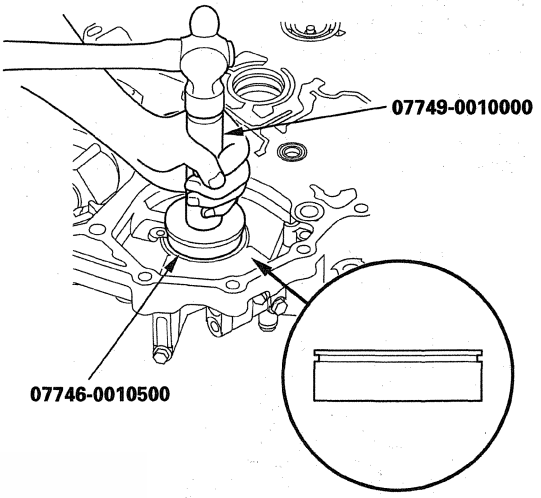

8. Check that the bearing groove aligns with the set plate mounting surface, then install the set plate (A) by aligning it with the bearing groove.

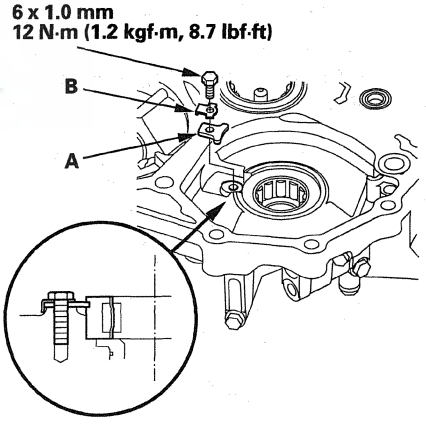

9. Install the new lock washer (B) and bolt, then bend the lock tab of the lock washer against the bolt head.

Intermediary Shaft Bearing Replacement

Special Tools Required
- Adjustable bearing puller, 25—40 mm 07736-A01000B or 07736-A01000A
- Sliding hammer weight 07741-0010201
- Driver 07749-0010000
- Attachment, 52 x 55 mm 07746-0010400

1. Remove the intermediary shaft bearing from the torque converter housing using the adjustable bearing remover and the sliding hammer weight.

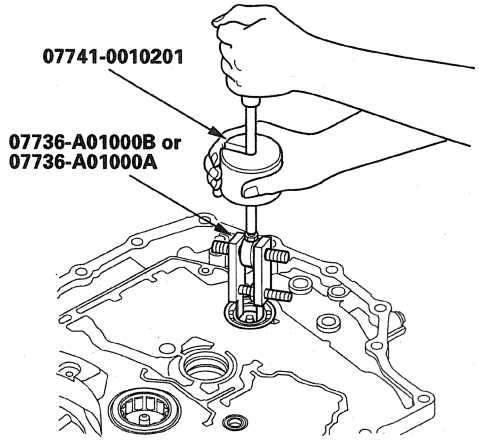

2. Install the ATF guide plate (A), then install the new bearing (B) in the housing.

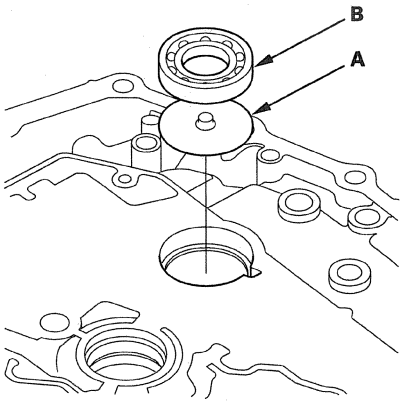

3. Drive the bearing into the housing using the driver and the attachment (52 x 55 mm).

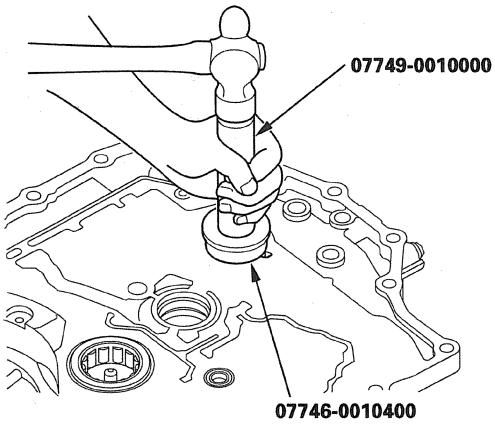

Park Lever Shaft Bearing Replacement

Special Tools Required
- Bearing remover shaft set, 12 mm 07936-1660101
- Sliding hammer weight 07741-0010201
- Driver 07749-0010000
- Attachment, 22 x 24 mm 07746-0010800

1. Remove the park lever shaft bearing from the torque converter housing using the bearing remover shaft set (12 mm) and the sliding hammer weight.

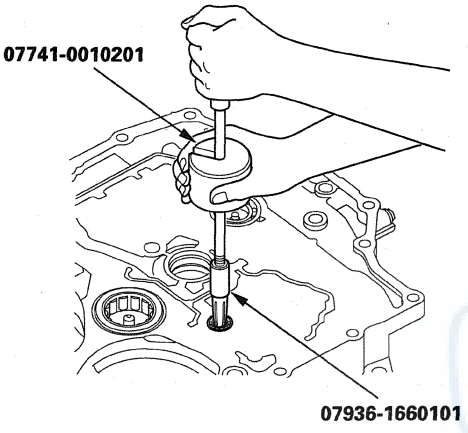

2. Install the new bearing until it bottoms in the housing using the driver and the attachment (22 x 24 mm).

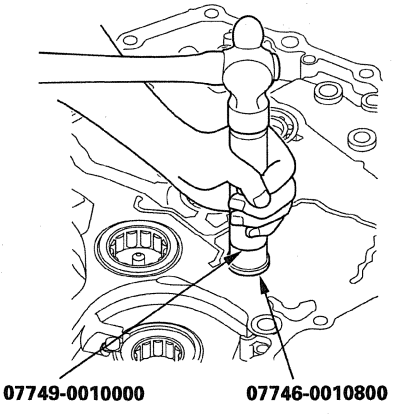

Mainshaft Disassembly, Inspection, and Reassembly

1. Remove the thrust needle bearing (A), mainshaft 5th gear (B), needle bearing (C), thrust needle bearing (D), mainshaft 5th gear collar (E), 4th/5th clutch (F), and O-rings (G) from the mainshaft (H).

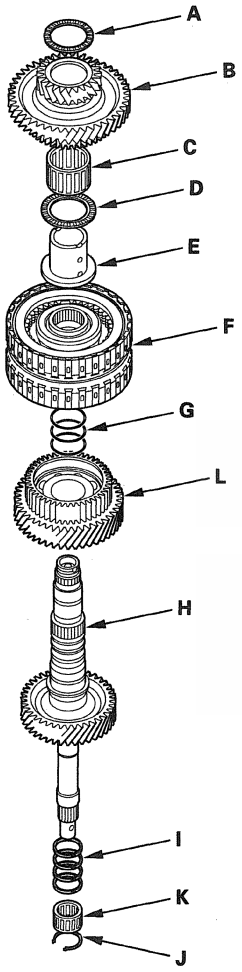

2. Inspect the condition of the sealing rings (I). If the sealing rings are worn, distorted, or damaged, remove the set ring (J) and needle bearing (K), and replace the sealing rings with new ones.
3. Inspect the thrust needle bearing and needle bearing for wear and rough movement.
4. Inspect the splines for excessive wear and damage.
5. Inspect the 4th gear for wear and damage, and inspect the 4th gear bearing for wear and rough rotation.
6. Replace the mainshaft 4th gear (L) if the 4th gear is worn or damaged, or the bearing is worn or damaged.
7. Check the shaft bearing surfaces for scoring and excessive wear.
8. Lubricate all parts with ATF during reassembly.
9. Wrap the shaft splines with tape to prevent O-ring damage, install the new O-rings on the mainshaft, then remove the tape.
10. Install the 4th/5th clutch.
11. Install the mainshaft 5th gear collar, thrust needle bearing, needle bearing, mainshaft 5th gear, and thrust needle bearing.

Mainshaft 4th Gear Replacement

Special Tools Required
Driver, 40 mm I.D. 07746-0030100

1. Remove the mainshaft 4th gear (A) with the press. Place a shaft protector (B) between the press and mainshaft (C) to prevent damaging the mainshaft.

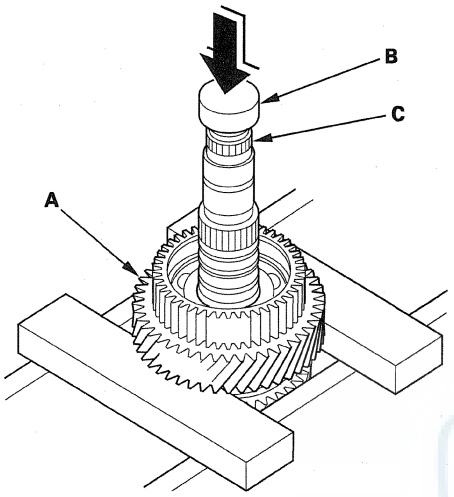

2. Slide the new mainshaft 4th gear (A) over the mainshaft (B), then press it into place using the driver (40 mm I.D.) and the press.

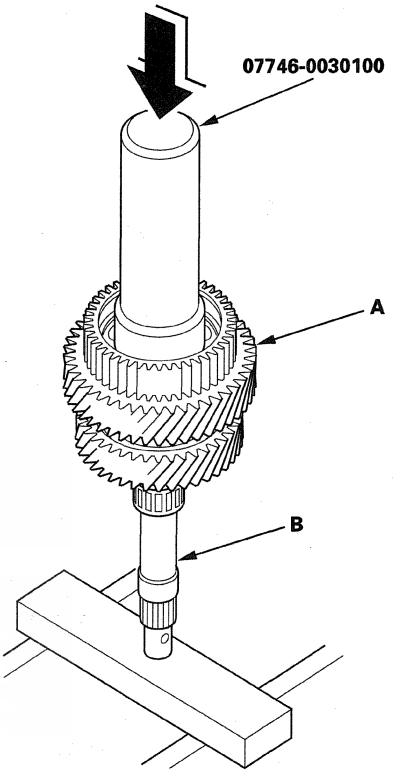

HONDA

Countershaft Disassembly

Exploded View

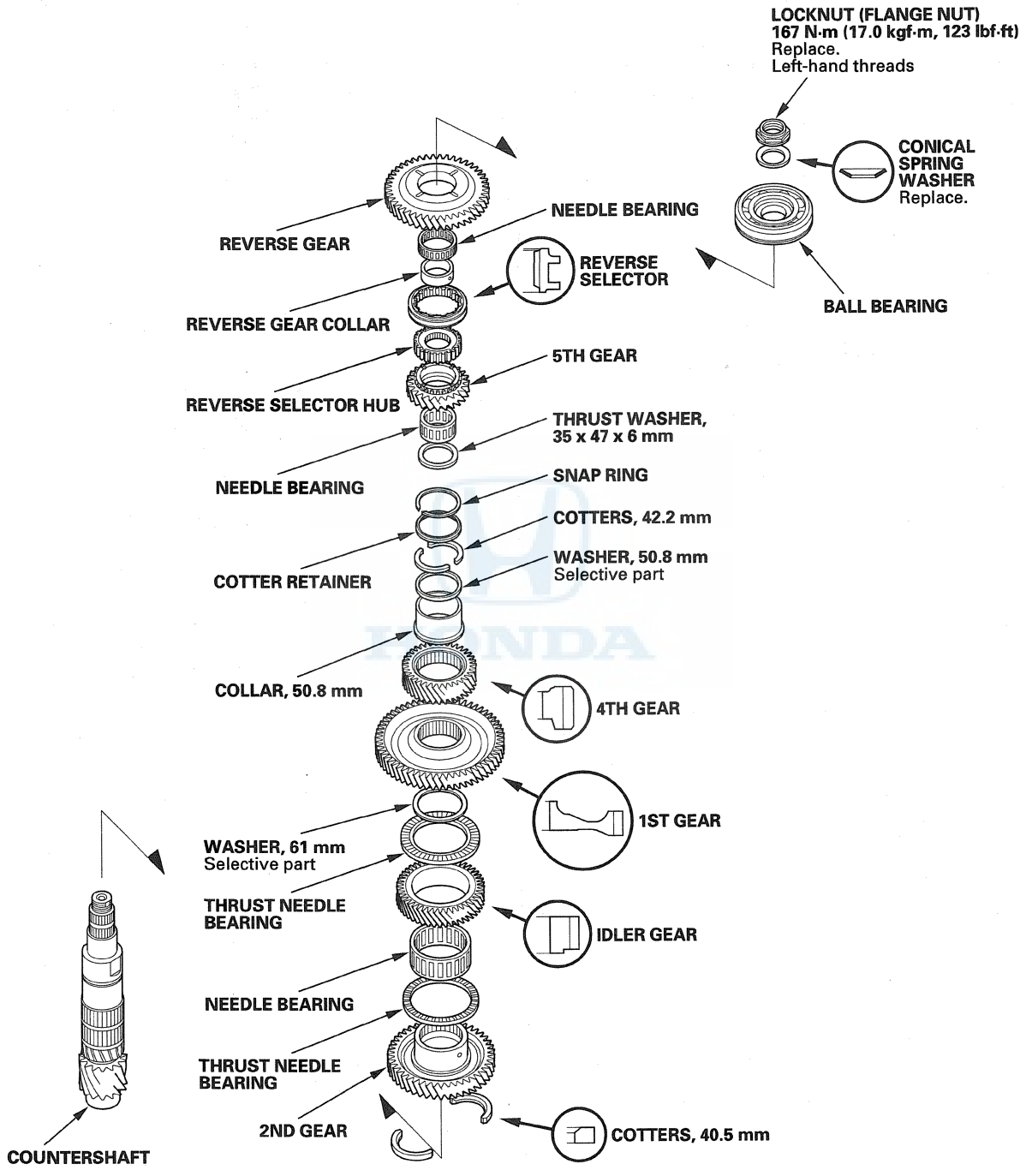

NOTE: Refer to the Exploded View as needed during the following procedure.

1. Cut the lock tab (A) off the countershaft locknut (B) using a chisel (C).

   NOTE: Keep all of the chiseled particles out of the countershaft.

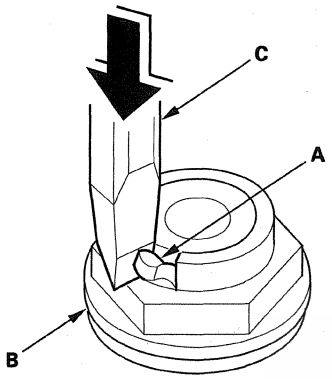

2. Hold the countershaft securely with a wrench and a vise, loosen the locknut, and remove it. The locknut has left-hand threads.

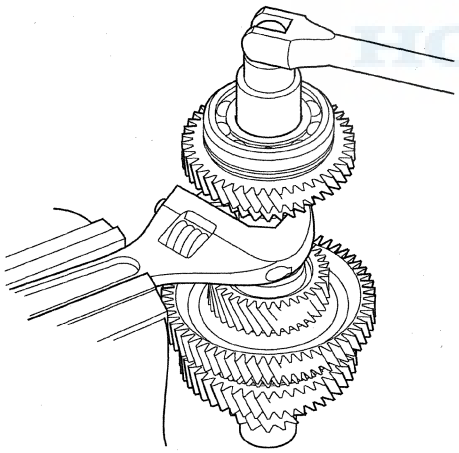

3. Place the countershaft 5th gear (A) on press bases (B), and place a shaft protector (C) between the countershaft (D) and the press to prevent damaging the countershaft.

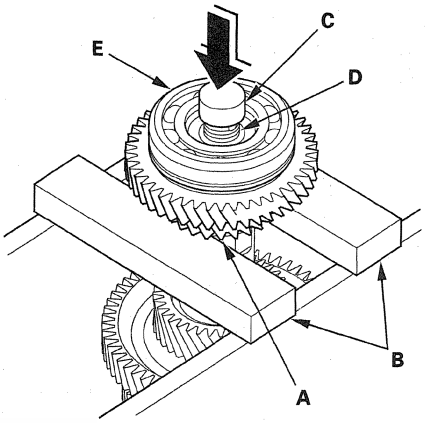

4. Support the bottom of the countershaft with one hand, then press the countershaft out of the press-fitted bearing (E) and the press-fitted reverse selector hub. Some reverse selector hubs are not press-fitted, and the countershaft may drop out of the press-fitted bearing.

5. Remove the remaining parts from the countershaft.

6. Inspect the bearing for galling and rough movement.

7. Check the shaft bearing surfaces for scoring and excessive wear, and check the shaft splines for excessive wear and damage.

8. Check the idler gear axial clearance and 4th gear axial clearance (see page 14-294).

Countershaft Idler Gear and 4th Gear Axial Clearance Inspection

1. Install the 40.5 mm cotters (A), 2nd gear (B), thrust needle bearing (C), needle bearing (D), idler gear (E), thrust needle bearing (F), 61 mm washer (G), 1st gear (H), 4th gear (I), 50.8 mm collar (J), 50.8 mm washer (K), 42.2 mm cotters (L), cotter retainer (M), and snap ring (N) on the countershaft (O). Install the 40.5 mm cotters, idler gear, 1st gear, and 4th gear in the direction shown.

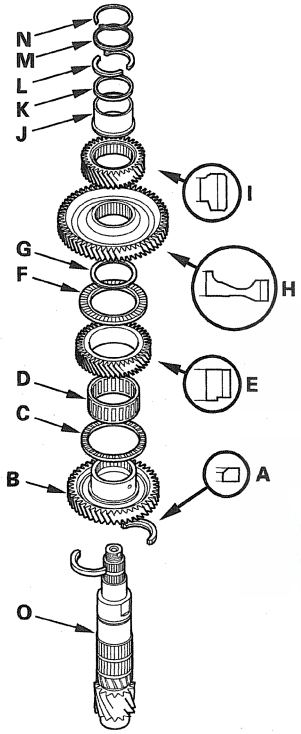

2. Insert a feeler gauge blade (A) as thick as possible between the 50.8 mm collar (B) and 50.8 mm washer (C).

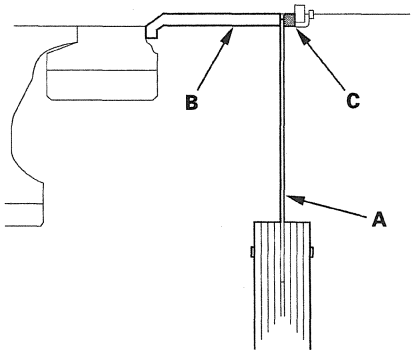

3. Set the dial indicator (A) on the idler gear (B).

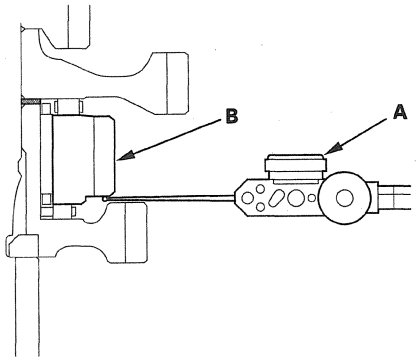

4. Measure the idler gear axial clearance in at least three places while moving the idler gear. Use the average as the actual clearance.

Standard: 0.005—0.040 mm (0.0002—0.0016 in)

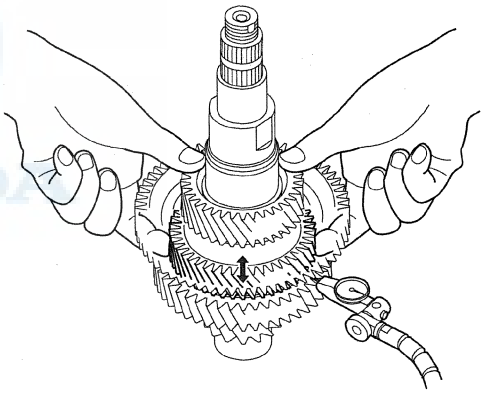

5. If the measurement is out of standard, remove the 61 mm washer and measure its thickness.

6. From the table below, select the proper washer. Then install the washer and recheck the clearance.

WASHER, 61 mm

No.	Thickness
A	1.525 mm (0.0600 in)
B	1.505 mm (0.0593 in)
C	1.485 mm (0.0585 in)
D	1.465 mm (0.0577 in)
E	1.445 mm (0.0569 in)
F	1.425 mm (0.0561 in)
G	1.405 mm (0.0553 in)

7. Measure the clearance between the 50.8 mm collar (A) and the 50.8 mm washer (B) with a feeler gauge (C) in at least three places. Use the average as the actual clearance.

Standard: 0.005—0.040 mm (0.0002—0.0016 in)

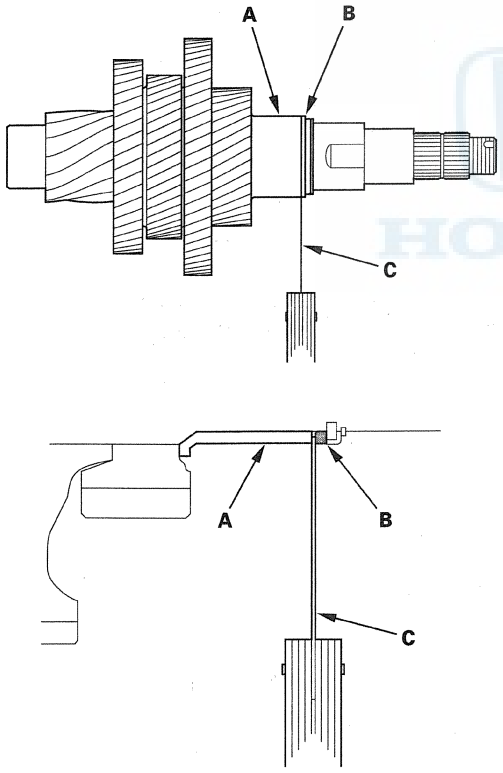

8. If the measurement is out of standard, remove the 50.8 mm washer and measure its thickness.

9. From the table below, select the proper washer. Then install the washer and recheck the clearance.

WASHER, 50.8 mm

No.	Thickness
A	1.91 mm (0.0752 in)
B	1.93 mm (0.0760 in)
C	1.95 mm (0.0768 in)
D	1.97 mm (0.0776 in)
E	1.99 mm (0.0783 in)
F	2.01 mm (0.0791 in)
G	2.03 mm (0.0799 in)
H	2.05 mm (0.0807 in)
I	2.07 mm (0.0815 in)
J	2.09 mm (0.0823 in)
K	2.11 mm (0.0831 in)
L	2.13 mm (0.0839 in)
M	2.15 mm (0.0846 in)
N	2.17 mm (0.0854 in)
O	2.19 mm (0.0862 in)
P	2.21 mm (0.0870 in)
Q	2.23 mm (0.0878 in)
R	2.25 mm (0.0886 in)
S	2.27 mm (0.0894 in)
T	2.29 mm (0.0902 in)
U	2.31 mm (0.0909 in)
V	2.33 mm (0.0917 in)
W	2.35 mm (0.0925 in)
X	2.37 mm (0.0933 in)
Y	2.39 mm (0.0941 in)
Z	2.41 mm (0.0949 in)
AA	2.43 mm (0.0957 in)
AB	2.45 mm (0.0965 in)

Countershaft Reassembly

Special Tools Required
Driver, 40 mm I.D. 07746-0030100

1. Install the 40.5 mm cotters (A), 2nd gear (B), thrust needle bearing (C), needle bearing (D), idler gear (E), thrust needle bearing (F), 61 mm washer (G), 1st gear (H), 4th gear (I), 50.8 mm collar (J), 50.8 mm washer (K), 42.2 mm cotters (L), cotter retainer (M), and snap ring (N) on the countershaft (O). Install the 40.5 mm cotters, idler gear, 1st gear, and 4th gear in the direction shown.

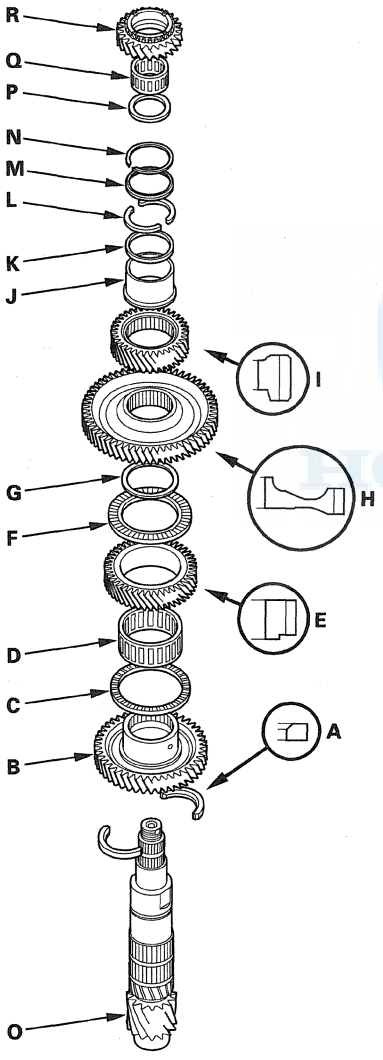

2. Install the thrust washer (P), needle bearing (Q) and 5th gear (R).

3. Slide the reverse selector hub (A) over the countershaft (B), then press it into place using the driver (40 mm I. D.) and the press.

   NOTE: Some reverse selector hubs are not press-fitted, and can be installed without using the driver and a press.

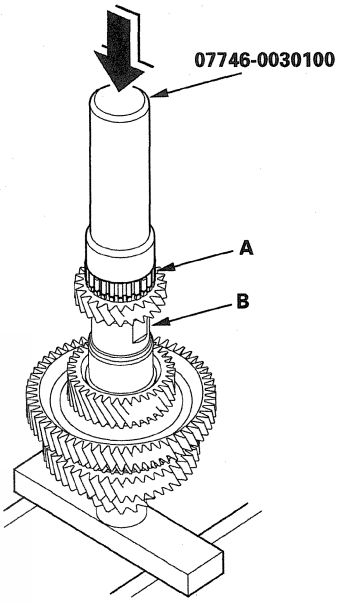

4. Install the reverse selector, reverse gear collar, needle bearing, and reverse gear over the reverse selector hub.

5. Install the ball bearing (A) over the countershaft, then press it into place using the driver (40 mm I.D.) and the press.

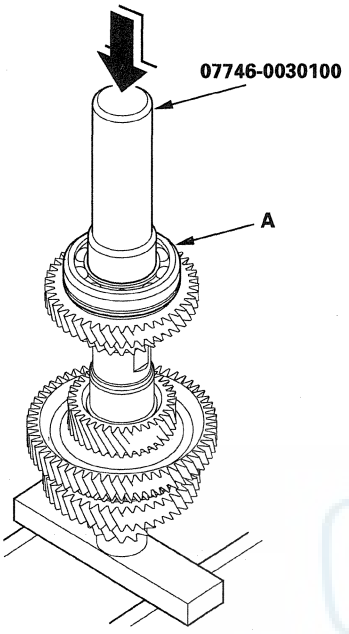

6. Install the conical spring washer (A) in the direction shown, and install the new locknut (B).

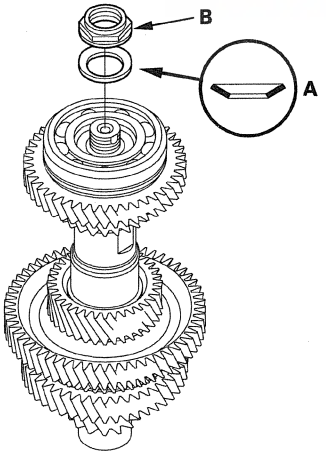

7. Hold the countershaft securely with a wrench and a vise, and tighten the locknut to 167 N·m (17.0 kgf·m, 123 lbf·ft).

NOTE:
- Use a torque wrench to tighten the locknut. Do not use an impact wrench.
- The locknut has left-hand threads.

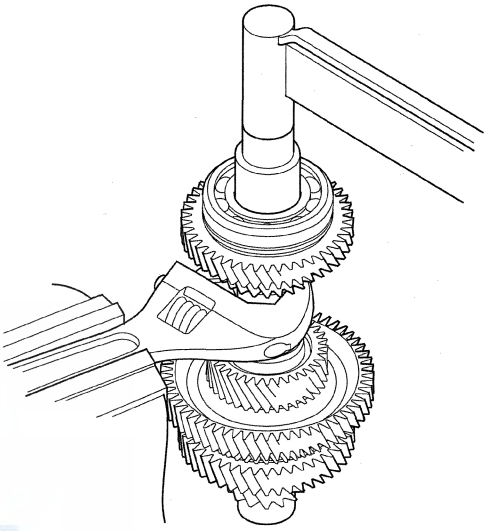

8. Stake the locknut into its shaft in depth (A) of 0.7—1.3 mm (0.03—0.05 in) using a 3.5 mm punch (B).

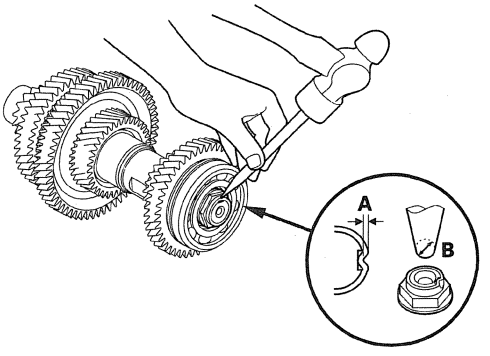

Secondary Shaft Disassembly

Exploded View

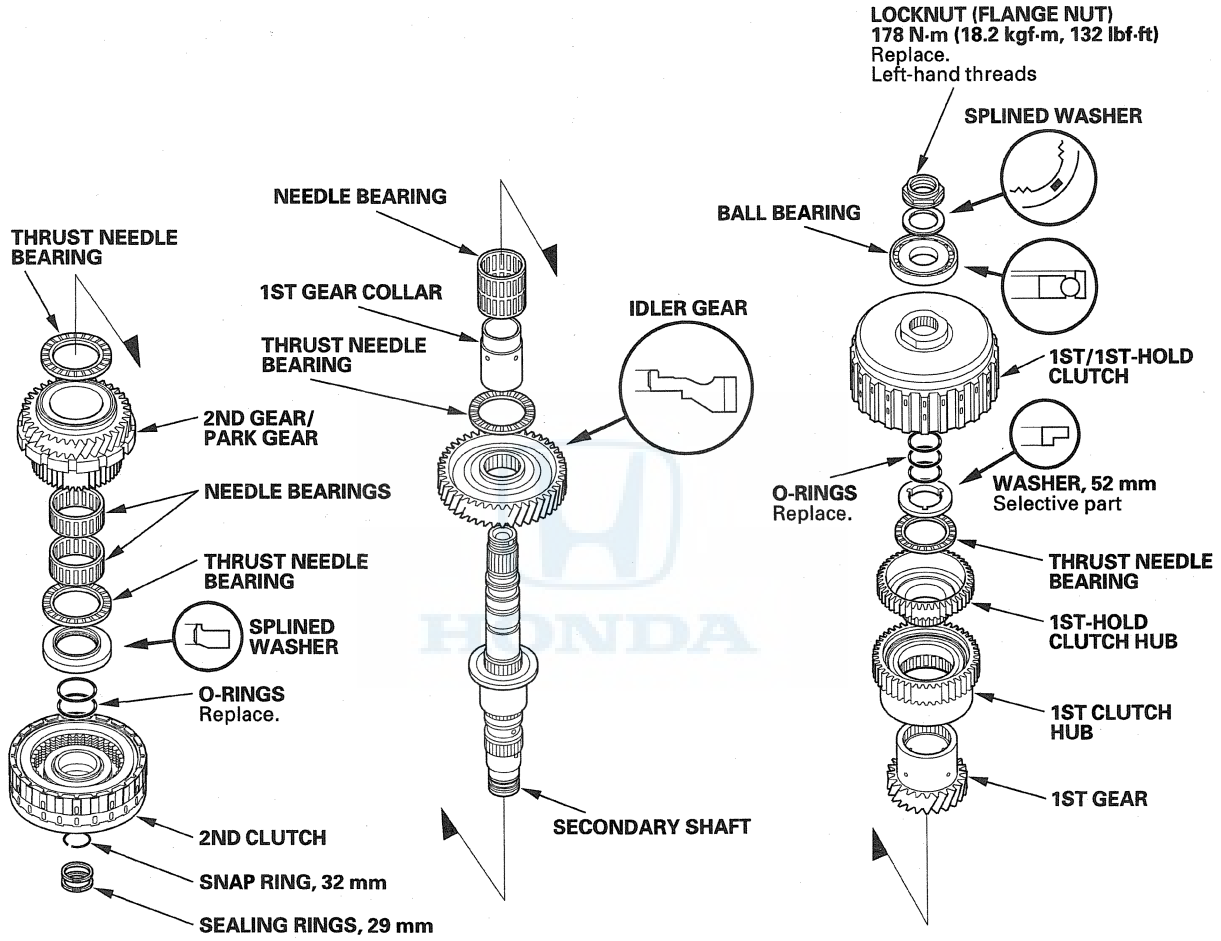

Special Tools Required
Wrench, 40 x 42 mm 07XAA-002010A

NOTE: Refer to the Exploded View as needed during the following procedure.

1. Cut the lock tab (A) off the secondary shaft locknut (B) using a chisel (C).

   NOTE: Keep all of the chiseled particles out of the secondary shaft.

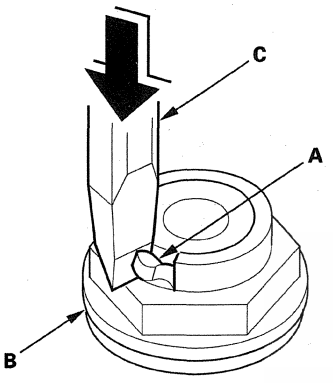

2. Place a V-block (A) on a vise (B), and put the secondary shaft (C) on the V-block and vise.

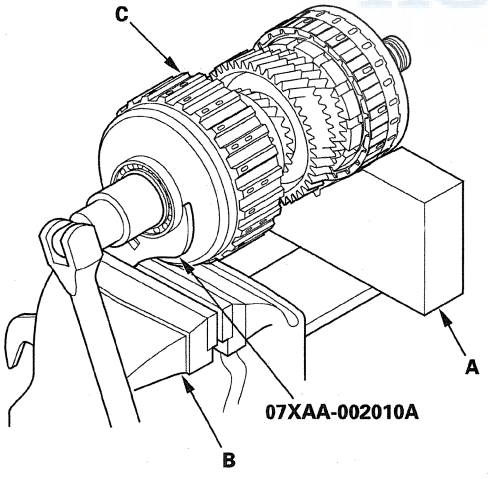

3. Attach the wrench (40 x 42 mm) onto the 1st clutch guide, and secure the wrench (40 x 42 mm) with the vise to hold the secondary shaft. Loosen the locknut, and remove it. Remove any burrs from splines on the shaft and splined washer.

4. Place the idler gear (A) on press bases (B), and place a shaft protector (C) between the secondary shaft (D) and the press to prevent damaging the secondary shaft.

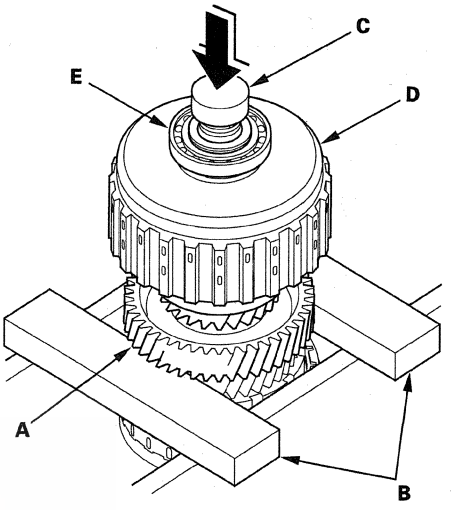

5. Support the bottom of the secondary shaft with one hand, then press the secondary shaft out of the press-fitted bearing (E).

6. Remove the 1st/1st-hold clutch, 52 mm washer, thrust needle bearing, 1st gear assembly, needle bearings, 1st gear collar, thrust needle bearing, and idler gear.

7. Remove the 32 mm snap ring, and remove the 2nd clutch, splined washer, thrust needle bearing, needle bearing, 2nd gear/park gear, and thrust needle bearing.

(cont'd)

Secondary Shaft Disassembly (cont'd)

8. Inspect the bearings for galling and rough movement.

   NOTE: The needle bearing (A) on the 1st gear collar contains the only two no-roller cavities (B); this is normal.

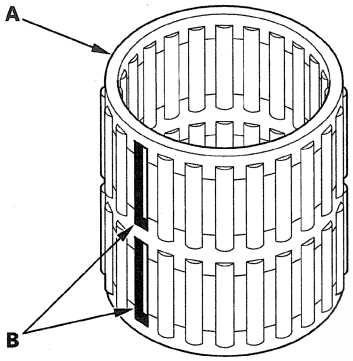

9. Check the shaft bearing surfaces for scoring and excessive wear, and check the shaft splines for excessive wear and damage.

10. Check the 1st gear axial clearance (see page 14-300), 1st gear one-way clutch (see page 14-302), and secondary shaft installation height (see page 14-306).

Secondary Shaft 1st Gear Axial Clearance Inspection

Special Tools Required
- Driver, 40 mm I.D. 07746-0030100
- Attachment, 30 mm I.D. 07746-0030300

1. Install the idler gear (A), thrust needle bearing (B), 1st gear collar (C), needle bearing (D), 1st gear assembly (E), thrust needle bearing (F), 52 mm washer (G), and 1st/1st-hold clutch (H) on the secondary shaft (I). Install the idler gear and 52 mm washer in the direction shown. Do not install the O-rings during inspection.

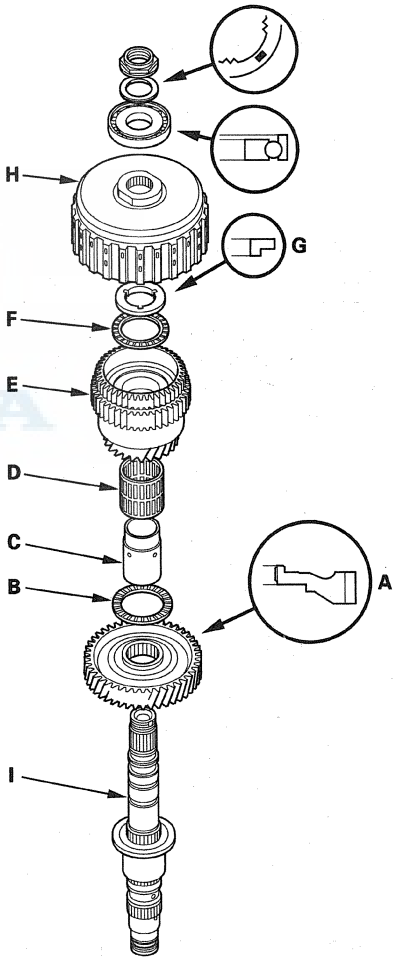

2. Install the ball bearing (A) over the 1st/1st-hold clutch guide using the driver (40 mm I.D.), the attachment (30 mm I.D.), and the press.

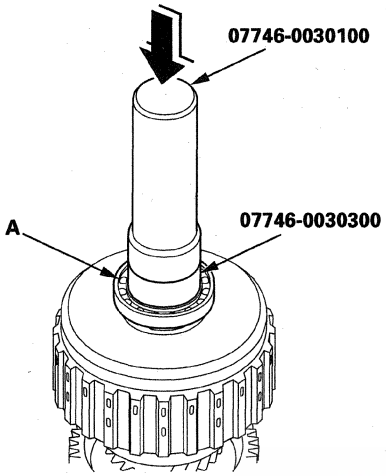

3. Install the splined washer with the marked side up over the ball bearing in the same manner as installing the ball bearing using the driver (40 mm I.D.), the attachment (30 mm I.D.), and the press.

4. Install the old locknut and tighten it to 29 N·m (3.0 kgf·m, 22 lbf·ft).

5. Set the dial indicator (A) on the 1st clutch hub (B).

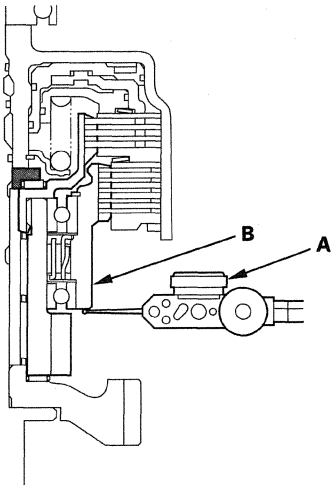

6. Measure the 1st gear axial clearance in at least three places while moving 1st gear. Use the average as the actual clearance.

Standard: 0.100—0.145 mm (0.004—0.006 in)

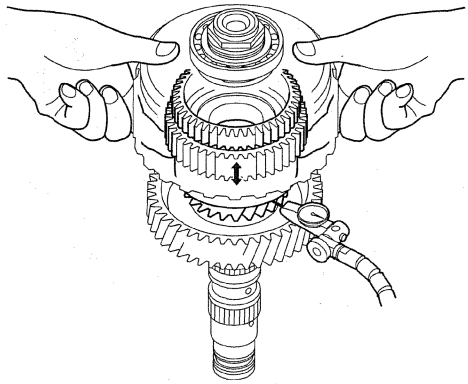

7. If the clearance is out of the standard, remove the washer and measure its height difference.

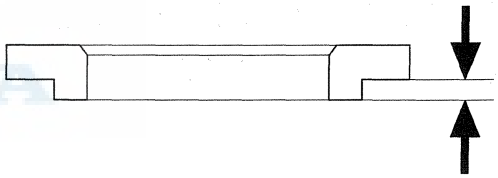

8. Select and install a new washer, then recheck the clearance.

WASHER, 52 mm

No.	Thickness
A	2.705 mm (0.106 in)
B	2.680 mm (0.106 in)
C	2.655 mm (0.105 in)
D	2.630 mm (0.104 in)
E	2.605 mm (0.103 in)
F	2.580 mm (0.102 in)
G	2.555 mm (0.101 in)
H	2.530 mm (0.100 in)
I	2.505 mm (0.099 in)
J	2.480 mm (0.098 in)
K	2.455 mm (0.097 in)
L	2.430 mm (0.096 in)
M	2.405 mm (0.095 in)

1st Gear One-way Clutch Inspection

1. Hold the 1st-hold clutch hub (A), and turn the 1st gear (B) in the direction shown to be sure it turns freely. Also make sure the 1st gear locks in the opposite direction.

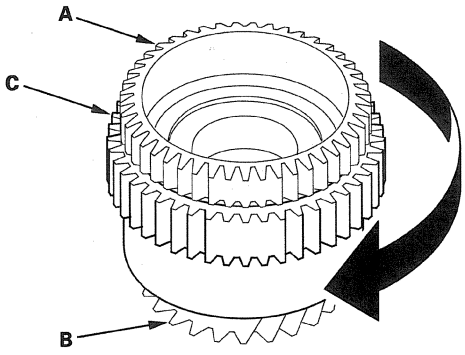

2. If any problem occurs on the 1st gear one-way clutch, replace the 1st clutch hub (C). The 1st gear one-way clutch is not available separately from the 1st clutch hub.

3. Also check the 1st gear and the 1st-hold clutch hub for wear and damage. If the 1st gear and 1st-hold clutch hub are worn or damaged, replace the damaged part, refer to 1st Clutch Hub Replacement (see page 14-302).

1st Clutch Hub Replacement

Special Tools Required
- Driver 07749-0010000
- Driver attachment 07947-6340500
- Attachment, 78 x 90 mm 07GAD-SD40101

1. Remove the 1st-hold clutch hub (A) from 1st gear (B) using the driver, the driver attachment, and the press.

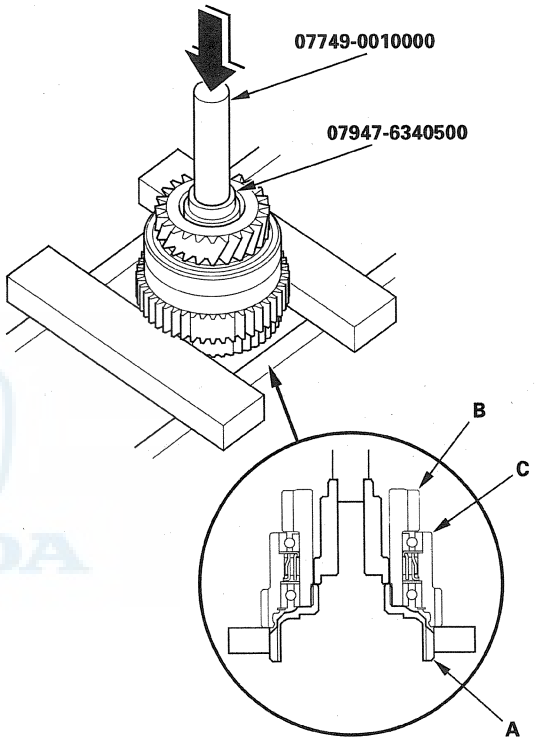

2. Remove the 1st clutch hub (C) from 1st gear.

3. Install the new 1st clutch hub (A) over 1st gear (B), and install the 1st-hold clutch hub (C) in 1st gear.

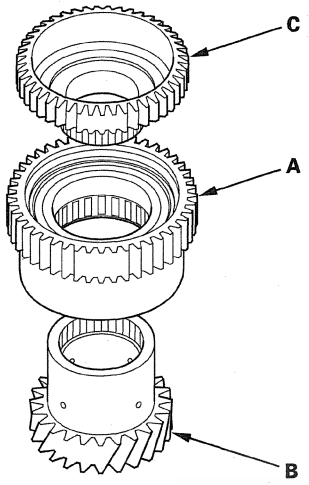

4. Install the 1st-hold clutch hub (A) in 1st gear (B) using the driver, the attachment (78 x 90 mm), and the press.

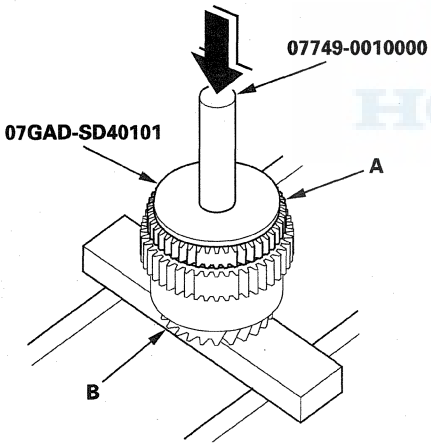

Secondary Shaft Reassembly

Special Tools Required
- Driver, 40 mm I.D. 07746-0030100
- Attachment, 30 mm I.D. 07746-0030300
- Wrench, 40 x 42 mm 07XAA-002010A

1. Install the thrust needle bearing (A), needle bearings (B), 2nd gear/park gear (C), thrust needle bearing (D), and splined washer (E) in the direction shown on the secondary shaft (F).

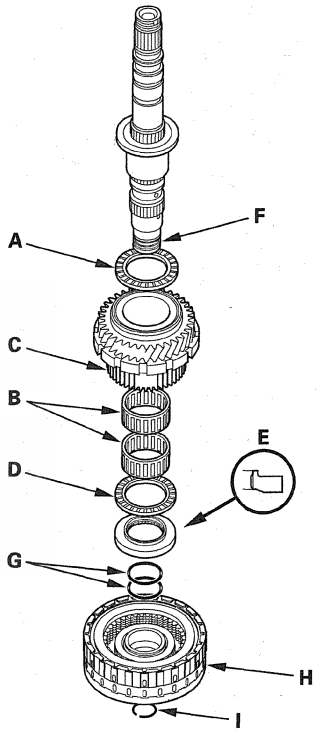

2. Wrap the shaft splines with tape, and install the new O-rings (G) in the 2nd clutch O-ring grooves, then remove the tape.

   NOTE: To prevent damaging the O-rings, be sure to install the O-rings after installing the splined washer.

3. Install the 2nd clutch (H) on the secondary shaft, and secure the 2nd clutch with the snap ring (I).

(cont'd)

Secondary Shaft Reassembly (cont'd)

4. Install the idler gear (A) in the direction shown, thrust needle bearing (B), 1st gear collar (C), needle bearing (D), 1st gear assembly (E), thrust needle bearing (F), and 52 mm washer (G) in the direction shown on the secondary shaft (H).

   NOTE: The needle bearing contains the only two no-roller cavities (I); this is normal.

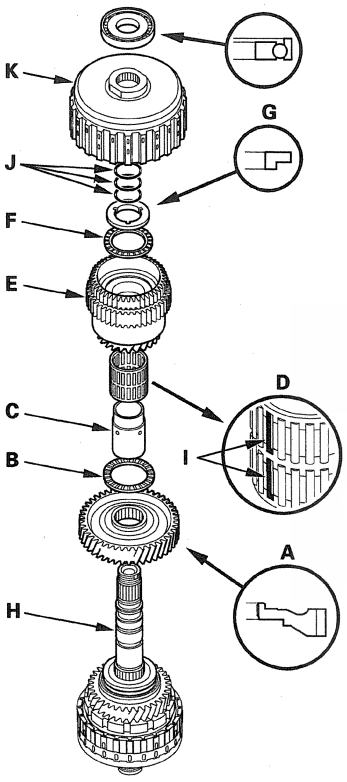

5. Wrap the shaft splines with tape, and install the new O-rings (J) in 1st/1st-hold clutch O-ring grooves, then remove the tape.

   NOTE: To prevent damaging the O-rings, be sure to install the O-rings after installing the 1st gear collar and 52 mm washer.

6. Install the 1st/1st-hold clutch (K).

7. Install the ball bearing (A) over the 1st/1st-hold clutch guide (B) using the driver (40 mm I.D.), the attachment (30 mm I.D.), and the press.

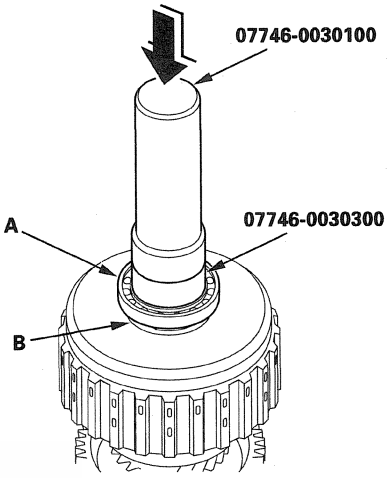

8. Install the new splined washer (A) with the marked side (B) up over the ball bearing using the driver (40 mm I.D.), the attachment (30 mm I.D.), and the press.

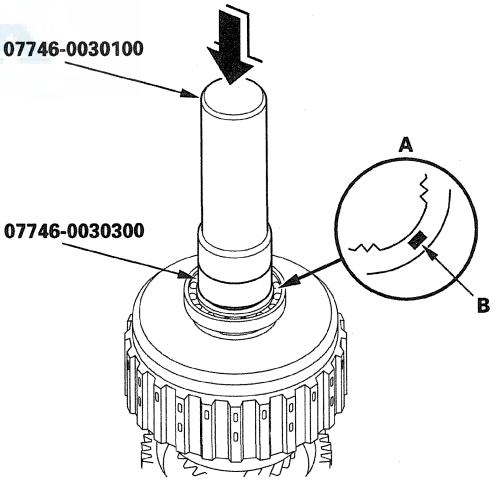

9. Install the new locknut.

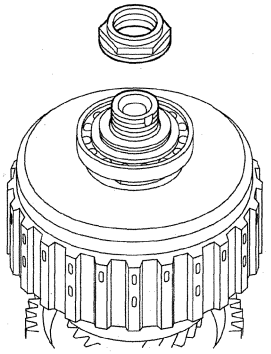

10. Place a V-block (A) on a vise (B), and put the secondary shaft (C) on the V-block and the vise.

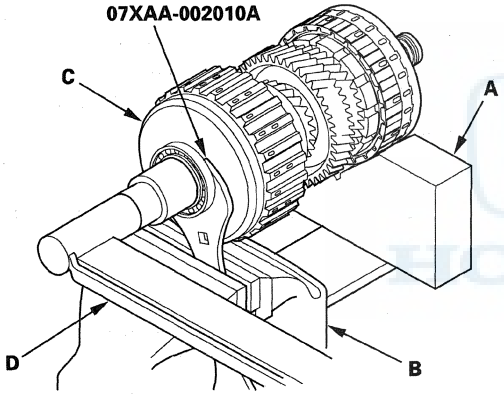

11. Attach the wrench (40 x 42 mm) onto the top of the 1st clutch guide, and secure the wrench (40 x 42 mm) with the vise to hold the secondary shaft. Tighten the locknut to 178 N·m (18.2 kgf·m, 132 lbf·ft) with the torque wrench (D).

NOTE:
- Use a torque wrench to tighten the locknut. Do not use an impact wrench.
- The locknut has left-hand threads.

12. Stake the locknut to a depth (A) of 0.7—1.3 mm (0.03—0.05 in) using a 3.5 mm punch (B).

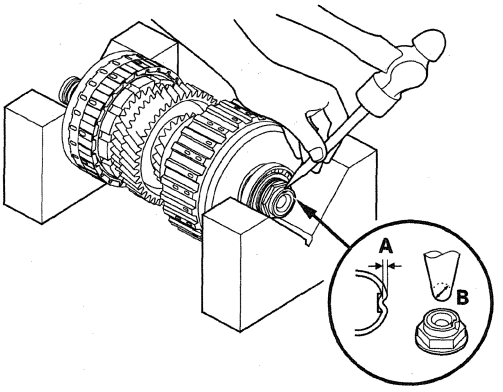

HONDA

Secondary Shaft Installation Height Inspection/Adjustment

1. Install the thrust needle bearing (A) in the torque converter housing (B) in the direction shown, and install the secondary shaft assembly (C).

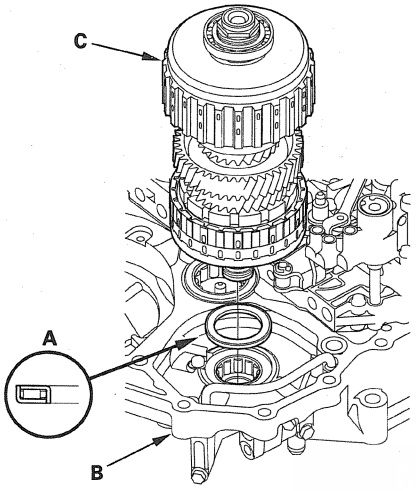

2. Install the new gasket (A) on the torque converter housing.

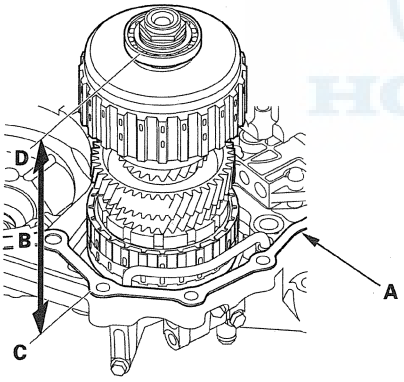

Secondary Shaft Cutaway View

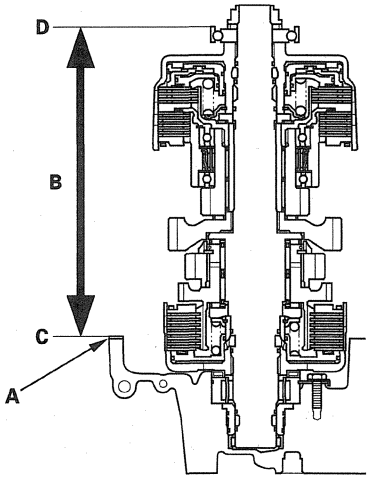

3. Measure the height (B) of the secondary shaft installation between the surface (C) of the gasket and the top of the ball bearing outer race (D), then note the measurement.

4. Remove the 65 mm thrust shim (A) from the transmission housing, and measure its thickness.

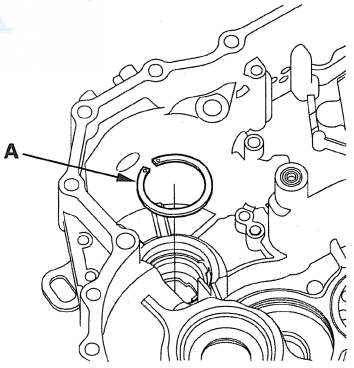

5. Calculate the thickness of the 65 mm thrust shim using the formula.

Formula:
65 mm Thrust Shim Thickness
= Secondary Shaft Installation Height Standard
— Measurement

Secondary Shaft Installation Height Standard:
228.04—228.13 mm (8.9779—8.9815 in)

6. Select the 65 mm thrust shim from the following table.

THRUST SHIM, 65 mm

No.	Thickness
0A	0.80 mm (0.031 in)
A	0.84 mm (0.033 in)
B	0.88 mm (0.035 in)
C	0.92 mm (0.036 in)
D	0.96 mm (0.038 in)
E	1.00 mm (0.039 in)
F	1.04 mm (0.041 in)
G	1.08 mm (0.043 in)
H	1.12 mm (0.044 in)
I	1.16 mm (0.046 in)
J	1.20 mm (0.047 in)
K	1.24 mm (0.049 in)
L	1.28 mm (0.050 in)
M	1.32 mm (0.052 in)
N	1.36 mm (0.054 in)
O	1.40 mm (0.055 in)
P	1.44 mm (0.057 in)
Q	1.48 mm (0.058 in)
R	1.52 mm (0.060 in)
S	1.56 mm (0.061 in)
T	1.60 mm (0.063 in)
U	1.64 mm (0.065 in)
V	1.68 mm (0.066 in)
W	1.72 mm (0.068 in)
X	1.76 mm (0.069 in)
Y	1.80 mm (0.071 in)
Z	1.84 mm (0.072 in)
AA	1.88 mm (0.074 in)
AB	1.92 mm (0.076 in)
AC	1.96 mm (0.077 in)
AD	2.00 mm (0.079 in)
AE	2.04 mm (0.080 in)
AF	2.08 mm (0.082 in)
AG	2.12 mm (0.083 in)
AH	2.16 mm (0.085 in)
AI	2.20 mm (0.087 in)
AJ	2.24 mm (0.088 in)
AK	2.28 mm (0.090 in)
AL	2.32 mm (0.091 in)
AM	0.76 mm (0.030 in)

7. Install the thrust shim in the transmission housing.

Intermediary Shaft Disassembly, Inspection, and Reassembly

1. Remove the 26.5 mm washer, snap ring, cotter retainer, and cotters from the intermediary shaft.

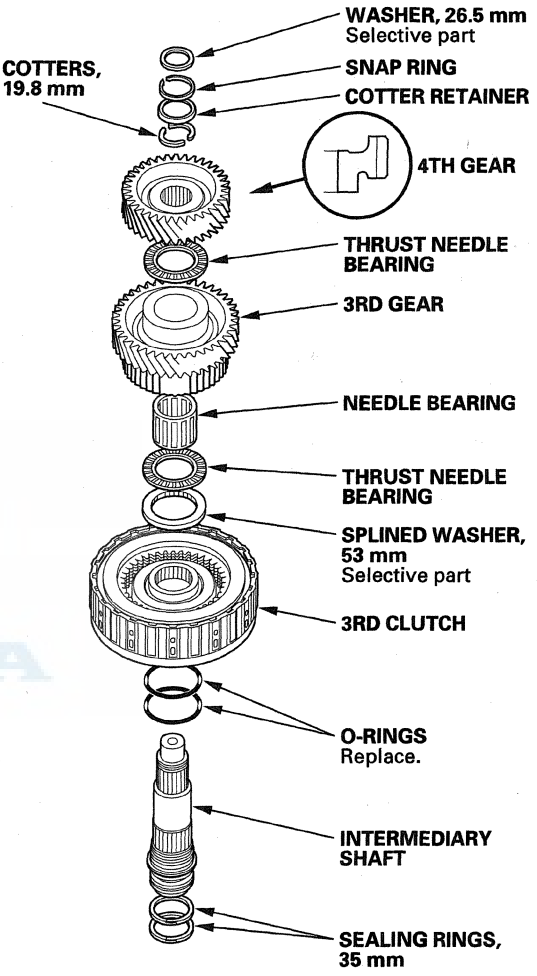

2. Remove the intermediary shaft 4th gear using the press (see page 14-308), and disassemble the shaft and gears.

3. Inspect the bearings for galling and rough movement.

(cont'd)

Intermediary Shaft Disassembly, Inspection, and Reassembly (cont'd)

4. Check the shaft bearing surfaces for scoring and excessive wear, and check the shaft splines for excessive wear and damage.
5. Check the sealing rings for excessive wear and damage.
6. Check the 3rd gear axial clearance (see page 14-309), and intermediary shaft installation height (see page 14-311).
7. Before installing the O-rings, wrap the shaft splines with tape to prevent damaging the O-rings.
8. Lubricate all parts with ATF, and reassemble the shaft and gears.
9. Install the press-fitted 4th gear using the driver (40 mm I.D.) and the press (see page 14-309) in the direction shown.

Intermediary Shaft 4th Gear Removal

1. Place 4th gear (A) on press bases (B), and place a shaft protector (C) between the intermediary shaft (D) and the press to prevent damaging the intermediary shaft.

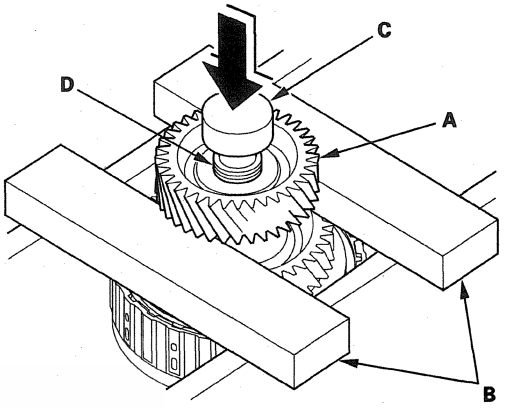

2. Support the bottom of the intermediary shaft with one hand, then press the intermediary shaft out of the press-fitted gear, and the intermediary shaft out of the press-fitted gear.
3. Remove the remaining parts from the intermediary shaft.

Intermediary Shaft 4th Gear Installation

Special Tools Required
Driver, 40 mm I.D. 07746-0030100

1. Wrap the shaft splines with tape, and install the new O-rings in the 3rd clutch O-ring grooves, then remove the tape.
2. Install the 3rd clutch, 53 mm splined washer, thrust needle bearing, needle bearing, 3rd gear, and thrust needle bearing on the intermediary shaft.
3. Install 4th gear (A) using the driver (40 mm I.D.) and the press.

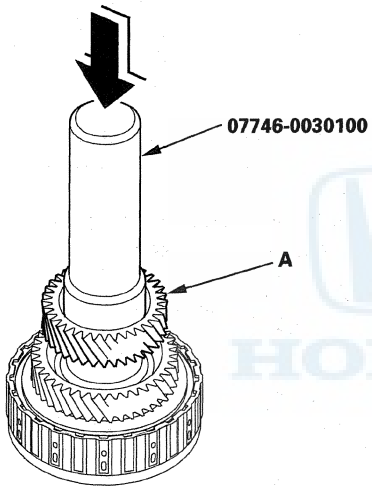

4. Install the 19.8 mm cotters, cotter retainer, and snap ring.
5. Install the 26.5 mm washer on the top of the intermediary shaft.

Intermediary Shaft 3rd Gear Axial Clearance Inspection

Special Tools Required
Driver, 40 mm I.D. 07746-0030100

1. Install the 3rd clutch (A), the original thickness 53 mm splined washer (B), thrust needle bearing (C), needle bearing (D), 3rd gear (E), and thrust needle bearing (F) on the intermediary shaft (G). Do not install the O-rings during inspection.

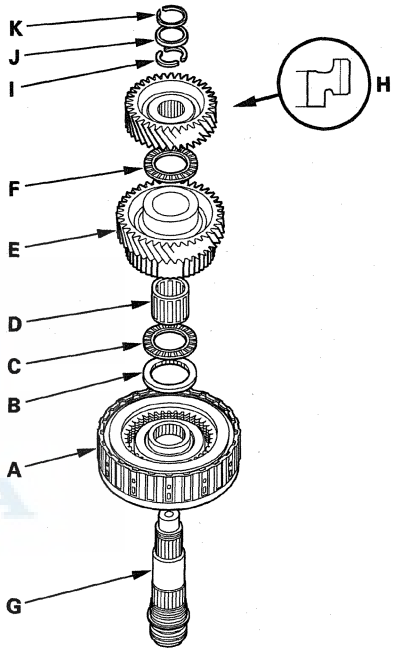

(cont'd)

Intermediary Shaft 3rd Gear Axial Clearance Inspection (cont'd)

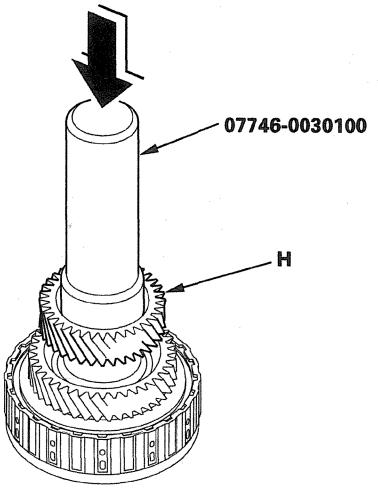

2. Install 4th gear (H) using the driver (40 mm I.D.) and the press.
3. Install the cotters (I), cotter retainer (J), and snap ring (K).
4. Set the dial indicator (A) on 3rd gear (B).

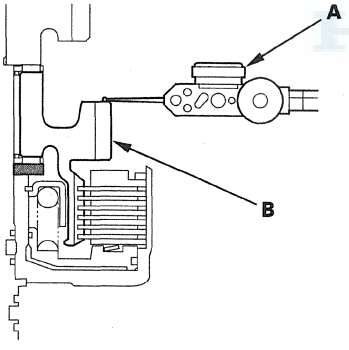

5. Measure the 3rd gear axial clearance in at least three places while moving 3rd gear. Use the average as the actual clearance.

Standard: 0.005—0.045 mm (0.0002—0.0018 in)

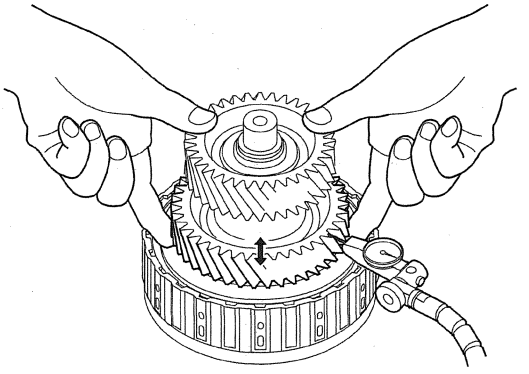

6. If the clearance is out of standard, remove the splined washer and measure its thickness.
7. Select and install a new splined washer, then recheck the clearance.

SPLINED WASHER, 53 mm

No.	Thickness
A	3.995 mm (0.1573 in)
B	4.015 mm (0.1581 in)
C	4.035 mm (0.1589 in)
D	4.055 mm (0.1596 in)
E	4.075 mm (0.1604 in)
F	4.095 mm (0.1612 in)
G	4.115 mm (0.1620 in)
H	4.135 mm (0.1628 in)
I	4.155 mm (0.1636 in)
J	4.175 mm (0.1644 in)
K	4.195 mm (0.1652 in)
L	4.215 mm (0.1659 in)
M	4.235 mm (0.1667 in)
N	4.255 mm (0.1675 in)

Intermediary Shaft Installation Height Inspection/Adjustment

1. Install the intermediary shaft (A) in the torque converter housing, and install the original thickness 26.5 mm washer (B) on the intermediary shaft.

   Intermediary Shaft Installation Height:
   Standard:
   137.285—137.385 mm (5.40491—5.40885 in)

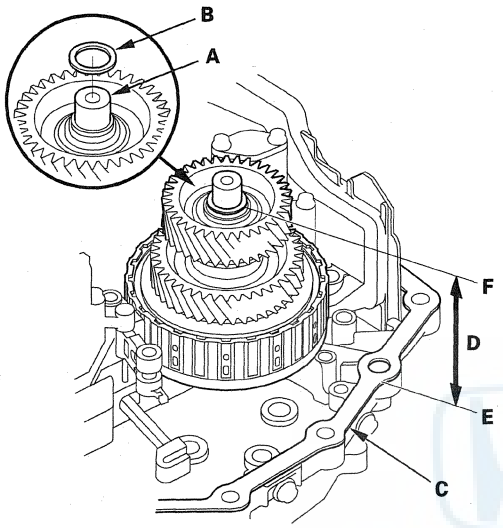

Intermediary Shaft Cutaway View

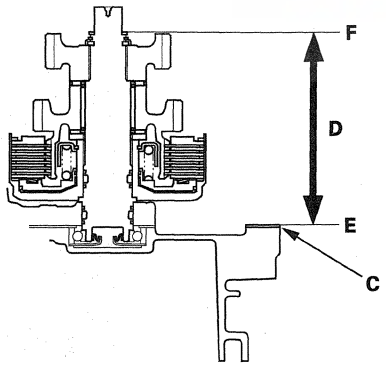

2. Install the new gasket (C) on the torque converter housing.

3. Measure the height (D) of the intermediary shaft installation between the surface (E) of the gasket and the surface of the 26.5 mm washer (F).

4. If the measurement is out of standard, remove the 26.5 mm washer and measure its thickness.

5. Select and install a new washer, then recheck the installation height.

WASHER, 26.5 mm

No.	Thickness
A	1.05 mm (0.041 in)
B	1.13 mm (0.044 in)
C	1.21 mm (0.048 in)
D	1.29 mm (0.051 in)
E	1.37 mm (0.054 in)
F	1.45 mm (0.057 in)
G	1.53 mm (0.060 in)
H	1.61 mm (0.063 in)
I	1.69 mm (0.067 in)
J	1.77 mm (0.070 in)
K	1.85 mm (0.073 in)
L	1.93 mm (0.076 in)
M	2.01 mm (0.079 in)
N	2.09 mm (0.082 in)
O	0.97 mm (0.038 in)

Clutch Disassembly

Special Tools Required
Clutch spring compressor set 07LAE-PX40000

1. Remove the snap ring (A) with a screwdriver (B).

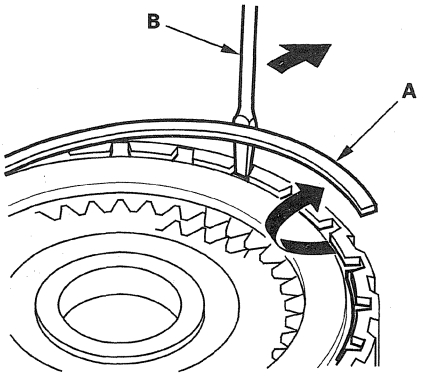

2. Remove the 1st clutch end-plate (A), 1st clutch discs (B) (5), 1st clutch wave-plates (C) (5), disc spring (D), 1st-hold clutch plate B (E), 1st-hold clutch discs (F) (3), 1st-hold clutch wave-plates (G) (2), and flat-plate (H) from the 1st/1st-hold clutch drum (I).

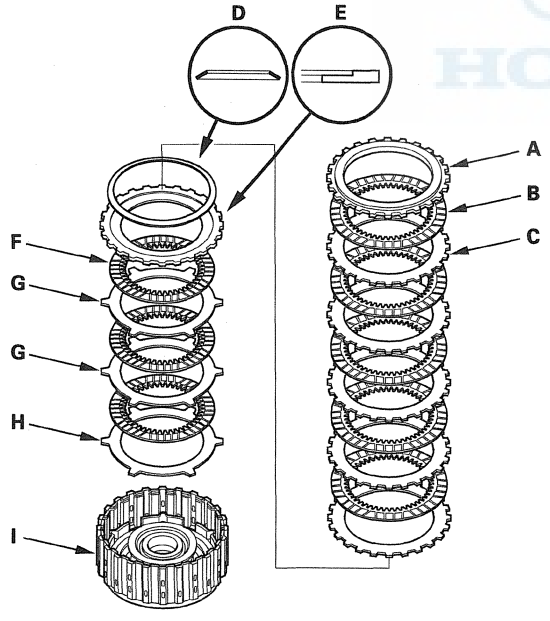

3. Make reference marks on the clutch wave-plate.

4. Remove the clutch end-plate (A), clutch discs (B) (7), clutch wave-plates (C) (3), and clutch flat-plates (D) (4) from the 2nd clutch drum (E).

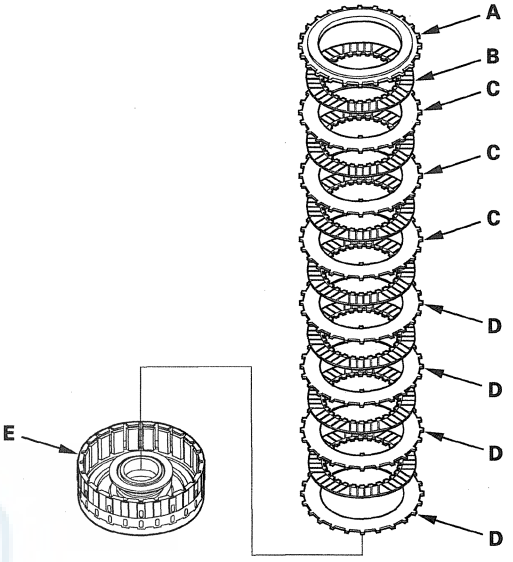

5. Make reference marks on the clutch wave-plates.

6. Remove the clutch end-plate (A), clutch discs (B) (6), clutch wave-plates (C) (3), and clutch flat-plates (D) (3) from the 3rd clutch drum (E).

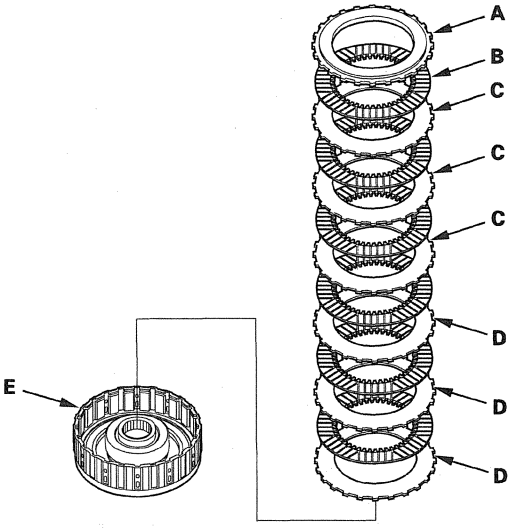

7. Make reference marks on the clutch wave-plates.

8. Remove the clutch end-plate (A), clutch discs (B) (5), clutch wave-plates (C) (2), clutch flat-plates (D) (3), and the disc spring (E) from the 4th clutch drum (F).

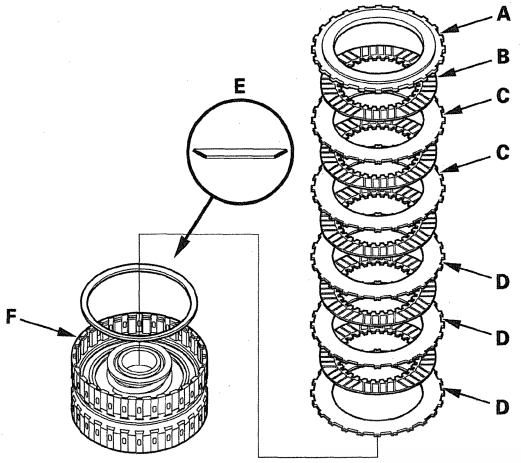

9. Make reference marks on the clutch wave-plates.

10. Remove the clutch end-plate (A), clutch discs (B) (5), clutch wave-plates (C) (2), clutch flat-plates (D) (3), and the disc spring (E) from the 5th clutch drum (F).

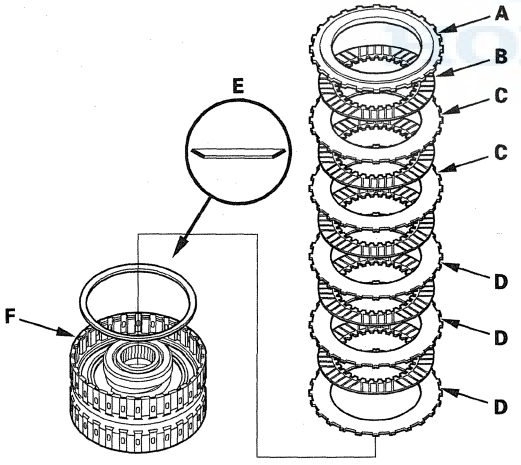

11. Make reference marks on the clutch wave-plates.

12. Install the clutch spring compressor set.

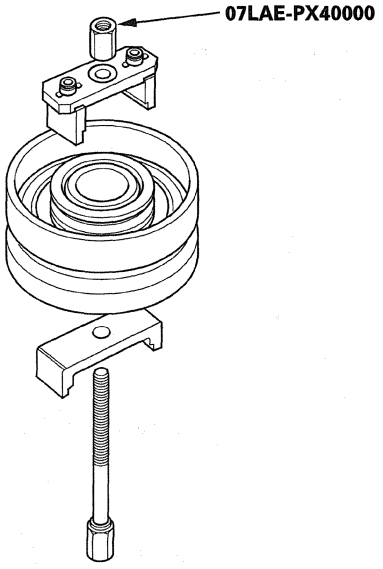

13. Be sure the clutch spring compressor attachment (A) is adjusted to make full contact with the spring retainer (B) on the 1st, 2nd, and 4th clutches.

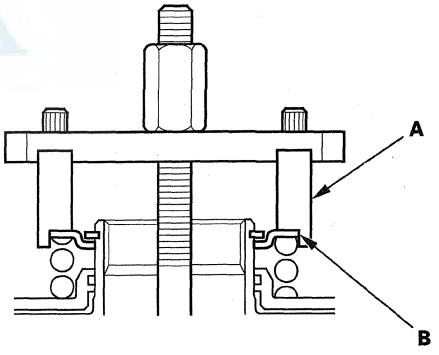

(cont'd)

Clutch Disassembly (cont'd)

14. Check the placement of the clutch spring compressor attachment. If either end of the clutch spring compressor attachment is set over an area of the spring retainer that is unsupported by the return spring, reset the clutch spring compressor attachment over the proper position.

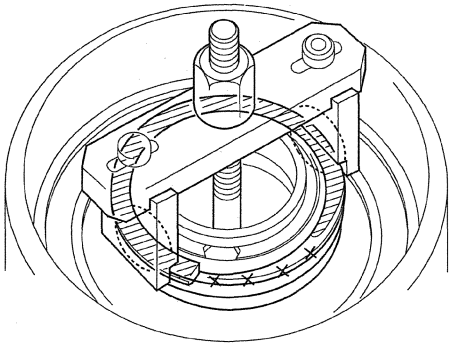

15. Set the clutch spring compressor attachment (A) on the spring retainer (B) of the 3rd and 5th clutches so the clutch spring compressor attachment works on the clutch return spring (C).

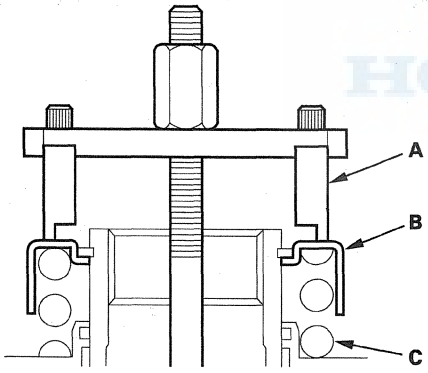

16. Check the placement of the clutch spring compressor attachment. If either end of the clutch spring compressor attachment is not set over the clutch return spring end (A), reset the clutch spring compressor attachment over the return spring end.

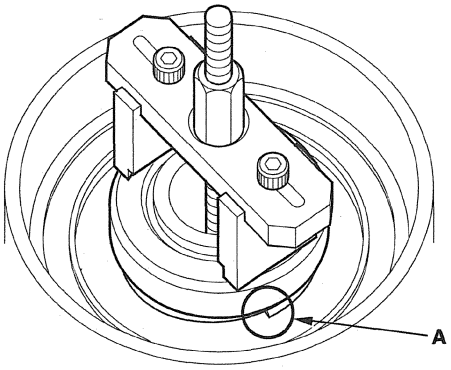

17. Compress the return spring until the snap ring can be removed.

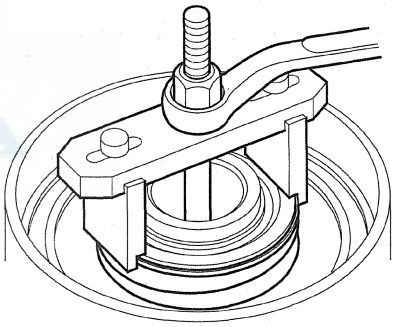

18. Remove the snap ring with snap ring pliers.

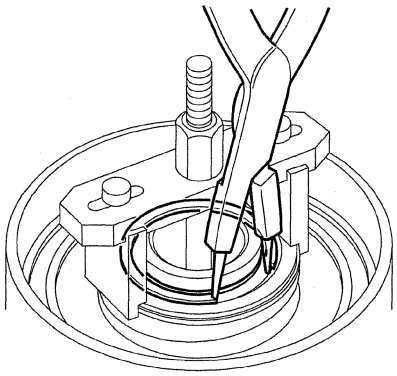

19. Remove the clutch spring compressor set.

20. Remove the snap ring (A), spring retainer (B), and return spring (C).

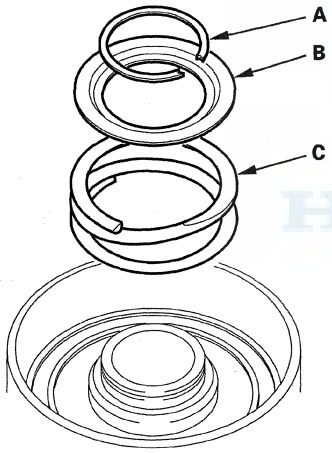

21. Wrap a shop rag around the clutch drum, and apply air pressure to the fluid passage to remove the piston. Place a finger tip on the other passage while applying air pressure.

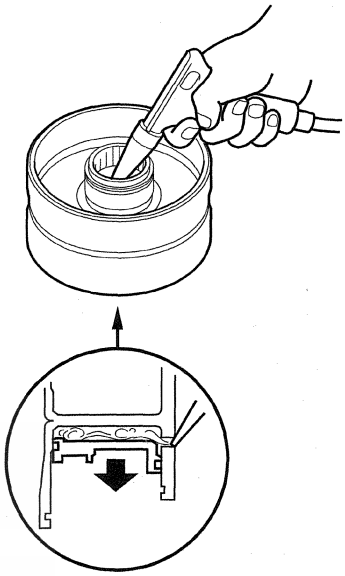

22. Remove the 1st/1st-hold clutch piston (A) from the clutch drum (B), and remove the O-rings from the 1st clutch piston.

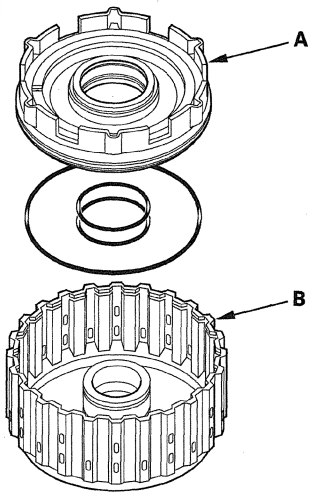

(cont'd)

Clutch Disassembly (cont'd)

23. Remove the 1st-hold clutch piston (A) from the 1st clutch piston (B), and remove the O-rings from the 1st-hold clutch piston.

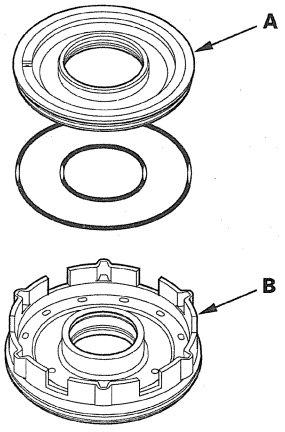

24. Remove the clutch piston, and remove the O-rings from the 2nd, 3rd, 4th, and 5th clutch pistons.

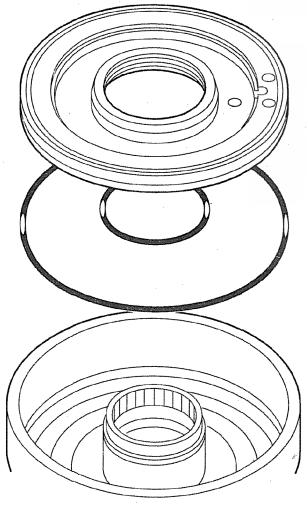

Clutch Inspection

1. Inspect the clutch pistons and clutch piston check valves (A).

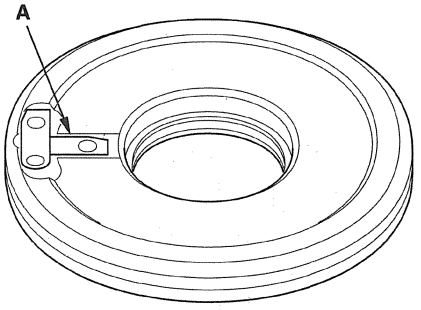

2. If the clutch piston check valve is loose or damaged, replace the clutch piston.

3. Check the spring retainer for wear and damage.

4. If the spring retainer is worn or damaged, replace it.

5. Inspect the clutch discs, clutch plates, and clutch end plate for wear, damage, and discoloration.

Clutch Discs:
Standard Thickness: 1.94 mm (0.076 in)

Clutch Flat-plates and Clutch Wave-plates
Standard Thickness:

1st Clutch:	**1.6 mm (0.063 in)**
1st-hold Clutch:	**1.8 mm (0.071 in)**
2nd Clutch:	**1.8 mm (0.071 in)**
3rd Clutch:	**1.8 mm (0.071 in)**
4th Clutch:	**1.6 mm (0.063 in)**
5th Clutch:	**1.6 mm (0.063 in)**

6. If the clutch discs are worn or damaged, replace them as a set. If the clutch discs are replaced, inspect the clearance between the clutch end-plate and the disc.

7. If any plate is worn, damaged, or discolored, replace the damaged plate with a new plate, and inspect the other wave-plates for a phase difference. If the clutch plate is replaced, inspect the clearance between the clutch end-plate and the disc.

8. If the clutch end plate is worn, damaged, or discolored, inspect the clutch end-plate disc clearance, then replace the clutch end plate.

Clutch Wave-plate Phase Difference Inspection

1. Place the clutch wave-plate (A) on a surface plate, and set a dial indicator (B) on the wave-plate.

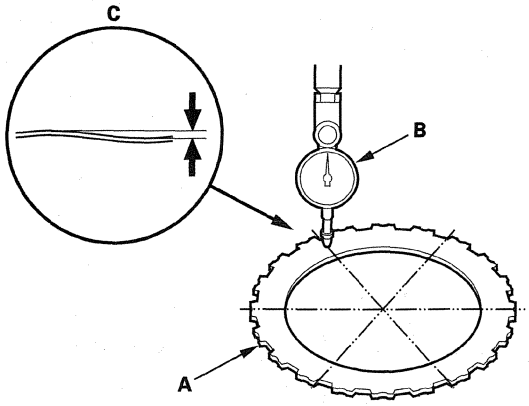

2. Find the bottom (C) of a phase difference of the wave-plate, zero the dial indicator and make a reference mark on the bottom of the wave-plate.

3. Measure the phase differences of 1st, 1st-hold, 2nd, and 3rd clutch wave-plates.

   -1 Rotate the clutch wave-plate a bout 60-degrees while holding the wave-plate by its circumference. The dial indicator should be at the top of a phase difference. Do not rotate the wave-plate while holding its surface, always rotate it by holding its circumference.

   -2 Read the dial indicator. The dial indicator reads the phase difference of the wave-plate between the bottom and top.

   Standard Phase Difference:
   1st Clutch: 0.17—0.30 mm (0.007—0.012 in)
   1st-hold Clutch: 0.07—0.20 mm (0.003—0.008 in)
   2nd Clutch: 0.07—0.20 mm (0.003—0.008 in)
   3rd Clutch: 0.1—0.2 mm (0.004—0.008 in)

   -3 Rotate the wave-plate a bout 60-degrees. The dial indicator should be at the bottom of a phase difference, and zero the dial indicator.

   -4 Measure the phase difference at the other two tops of the wave-plate by following steps -1 thru -3.

4. Measure the phase differences of 4th and 5th clutch wave-plates.

   -1 Rotate the clutch wave-plate 5-teeth or 4-teeth while holding the wave-plate by its circumference. The dial indicator should be at the top of a phase difference. Do not rotate the wave-plate while holding its surface, always rotate it by holding its circumference.

   -2 Read the dial indicator. The dial indicator reads the phase difference of the wave-plate between the bottom and top.

   Standard Phase Difference:
   4th Clutch: 0.07—0.20 mm (0.003—0.008 in)
   5th Clutch: 0.07—0.20 mm (0.003—0.008 in)

   -3 Rotate the wave-plate 5-teeth or 4-teeth. The dial indicator should be at the bottom of a phase difference, and zero the dial indicator.

   -4 Measure the phase difference at the other two tops of the wave-plate by following steps -1 thru -3.

5. If two of the three measurements are within the standard, the wave-plate is OK. If two of the measurements are out of standard, replace the wave-plate.

Clutch Clearance Inspection

Special Tools Required
Clutch compressor attachment 07ZAE-PRP0100

1. Inspect the clutch piston, discs, plates, and end-plate for wear and damage (see page 14-316), and inspect the clutch wave-plate phase difference (see page 14-317), if necessary.

2. Install the 1st-hold clutch piston in the 1st clutch piston, and install 1st/1st-hold clutch piston (A) in the 1st/1st-hold clutch drum (B). Do not install the O-rings on the clutch pistons during inspection.

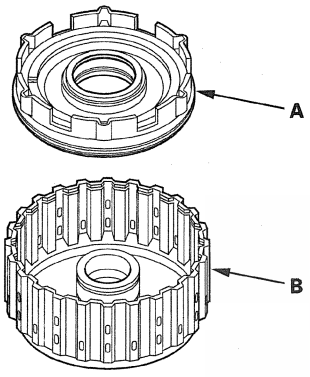

3. Install the 1st-hold clutch flat-plate (A), and alternately install the clutch discs (B) (3) and clutch wave-plates (C) (2) starting with the disc, then install 1st-hold clutch plate B (D) with the flat side down on the top disc.

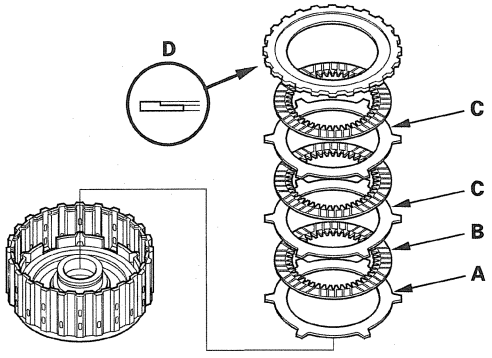

4. Measure the clearance between the 1st-hold clutch plate B and top disc with a feeler gauge (A) while pressing the 1st-hold clutch plate B down. Take measurements in at least three places, and use the average as the actual clearance.

Clearance Between 1st-hold Clutch Plate B and Top Disc
Service Limit: 0.6—1.0 mm (0.024—0.039 in)

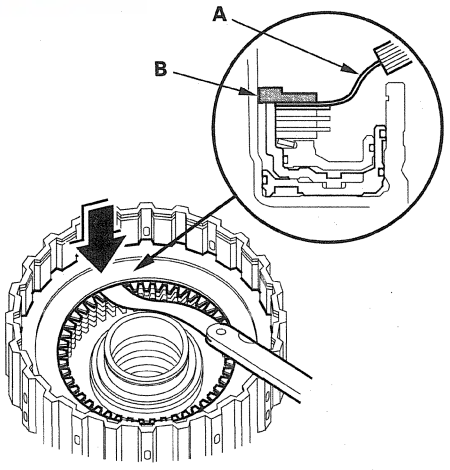

5. If the clearance is out of the standard, replace the 1st-hold clutch plates and discs as a set, and recheck.

6. Install the disc spring (A) on 1st-hold clutch plate B in the direction shown. Starting with the 1st clutch wave-plate, alternately install the wave-plates (B) (5) and discs (C) (5) in the 1st clutch drum (D), then install the clutch end-plate (E) with the flat side down on the top disc.

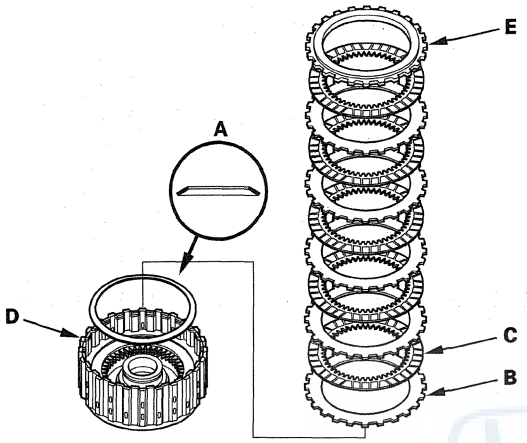

7. Install the clutch pistons in the 2nd, 3rd, 4th, and 5th clutch drums. Do not install the O-rings on the clutch pistons during inspection.

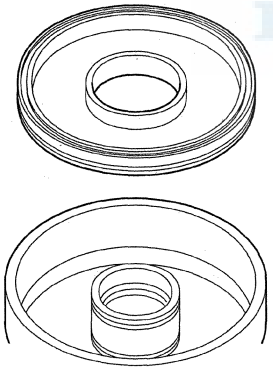

8. Starting with the 2nd clutch flat-plate, alternately install the flat-plates (A) (4) and discs (B) (4) in the 2nd clutch drum (C), and alternately install the wave-plates (D) (3) and discs (B) (3). Install the clutch end-plate (E) with the flat side down on the top disc.

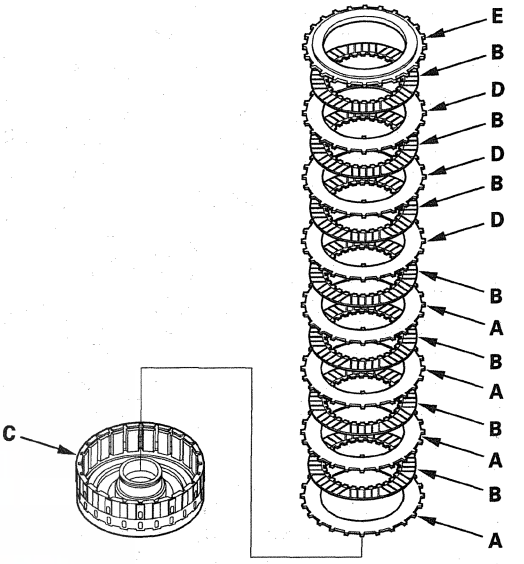

9. Starting with the 3rd clutch flat-plate, alternately install the flat-plates (A) (3) and discs (B) (3) in the 3rd clutch drum (C), and alternately install the wave-plates (D) (3) and discs (B) (3). Install the clutch end-plate (E) with the flat side down on the top disc.

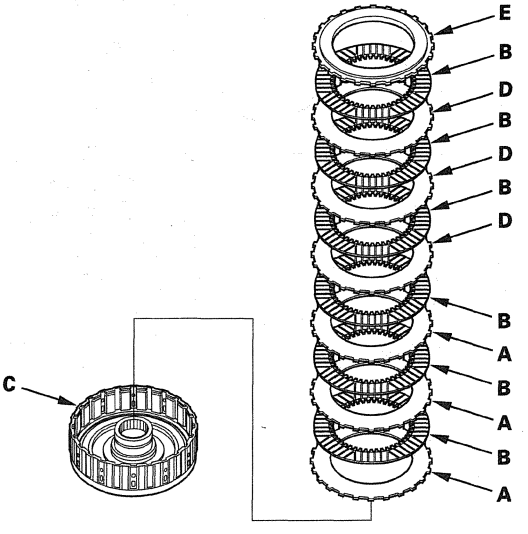

(cont'd)

Clutch Clearance Inspection (cont'd)

10. Install the disc spring (A) in the 4th clutch drum (B) in the direction shown. Starting with the 4th clutch flat-plate, alternately install the flat-plates (C) (3) and discs (D) (3), and alternately install the wave-plates (E) (2) and discs (D) (2). Install the clutch end-plate (F) with the flat side down on the top disc.

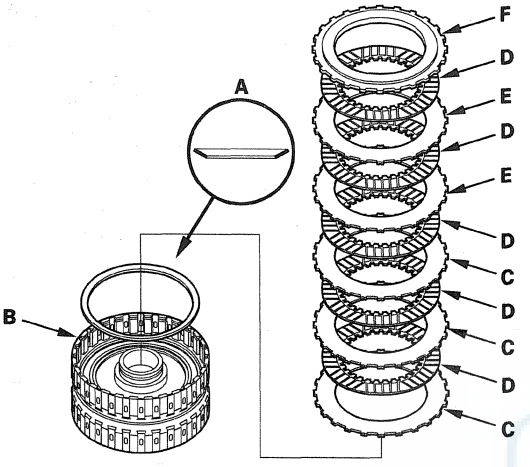

11. Install the disc spring (A) in the 5th clutch drum (B) in the direction shown. Starting with the 5th clutch flat-plate, alternately install the flat-plates (C) (3) and discs (D) (3), and alternately install the wave-plates (E) (2) and discs (D) (2). Install the clutch end-plate (F) with the flat side down on the top disc.

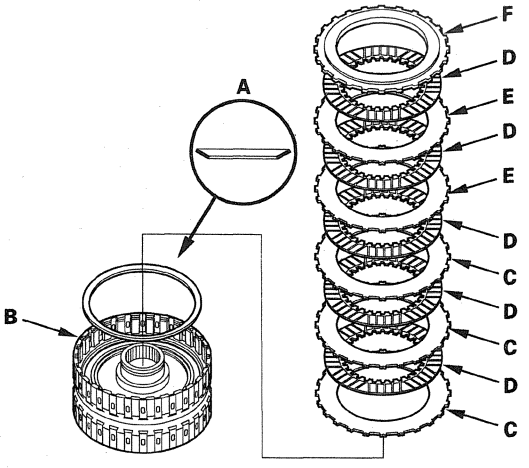

12. Install the snap ring with a screwdriver to secure the clutch end-plate.

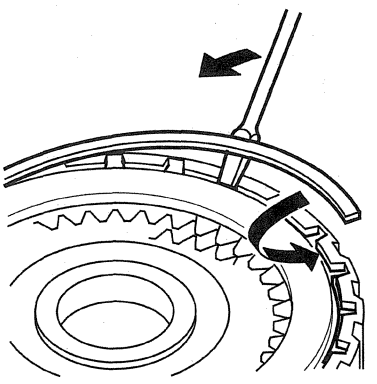

13. Set a dial indicator (A) on the clutch end-plate (B).

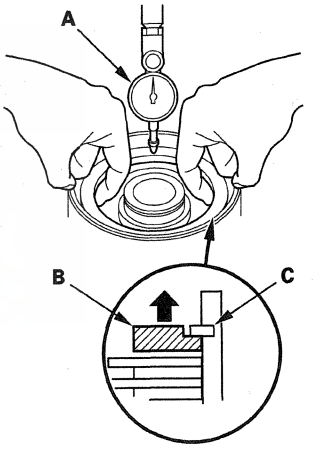

14. Zero the dial indicator with the clutch end-plate lifted up to the snap ring (C).

15. Release the clutch end-plate to lower the clutch end-plate, then put the clutch compressor attachment on the end-plate (A).

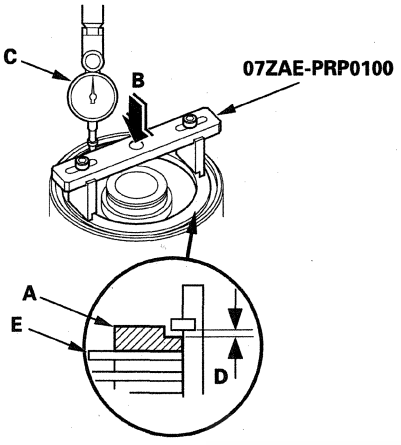

16. Press the clutch compressor attachment down with 150—160 N (15—16 kgf, 33—35 lbf) (B) using a force gauge, and read the dial indicator (C).

17. The dial indicator reads the clearance (D) between the clutch end-plate and top disc (E). Take measurements in at least three places, and use the average as the actual clearance.

Clearance Between the Clutch End-plate and the Top Disc
Service Limit:
1st Clutch: 1.15—1.35 mm (0.045—0.053 in)
2nd Clutch: 1.05—1.25 mm (0.041—0.049 in)
3rd Clutch: 0.9—1.1 mm (0.035—0.043 in)
4th Clutch: 0.75—0.95 mm (0.030—0.037 in)
5th Clutch: 0.75—0.95 mm (0.030—0.037 in)

18. If the clearance is out of the service limit, select a new clutch end-plate from the following table.

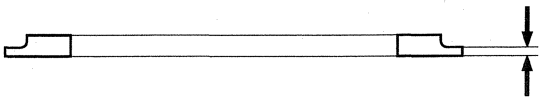

1ST CLUTCH END PLATES

Plate No.	Thickness
1	3.1 mm (0.122 in)
2	3.2 mm (0.126 in)
3	3.3 mm (0.130 in)
4	3.4 mm (0.134 in)
5	3.5 mm (0.138 in)
6	3.6 mm (0.142 in)
7	3.7 mm (0.146 in)
8	3.8 mm (0.150 in)
9	3.9 mm (0.154 in)

2ND, 3RD, 4TH, and 5TH CLUTCH END PLATES

Plate No.	Thickness
1	2.1 mm (0.083 in)
2	2.2 mm (0.087 in)
3	2.3 mm (0.091 in)
4	2.4 mm (0.094 in)
5	2.5 mm (0.098 in)
6	2.6 mm (0.102 in)
7	2.7 mm (0.106 in)
8	2.8 mm (0.110 in)
9	2.9 mm (0.114 in)

19. Install the new clutch end-plate, and recheck the clearance. If the thickest clutch end-plate is installed, but the clearance is still over the service limit, replace the clutch discs and plates.

Clutch Reassembly

Special Tools Required
Clutch spring compressor set 07LAE-PX40000

1. Soak the clutch discs thoroughly in ATF for a minimum of 30 minutes.

2. Install the new O-rings (A) on the 1st-hold clutch piston (B), and install the 1st-hold clutch piston in the 1st clutch piston (C).

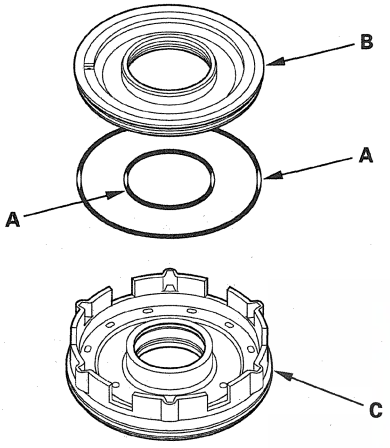

3. Install the new O-rings (A) on the 1st clutch piston (B), and install the 1st/1st-hold clutch piston in the 1st/1st-hold clutch drum (C) while applying pressure and rotating to ensure proper seating. Do not pinch the O-ring.

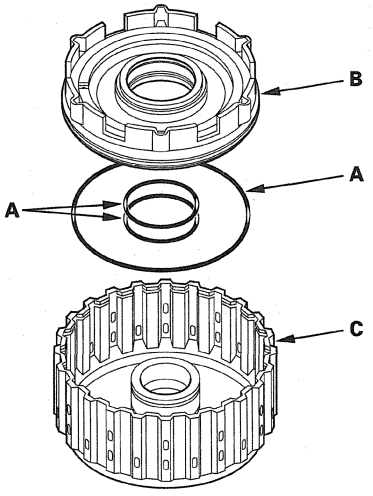

4. Install the O-rings (A) on the 2nd, 3rd, 4th, and 5th clutch piston (B).

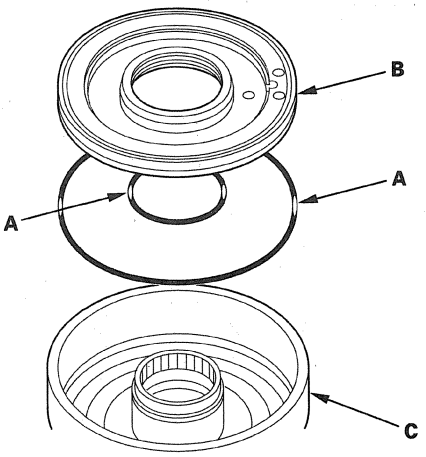

5. Install the clutch pistons in the clutch drums (C) while applying pressure and rotating to ensure proper seating. Do not pinch the O-ring.

6. Install the return spring (A) and spring retainer (B), and position the snap ring (C) on the spring retainer.

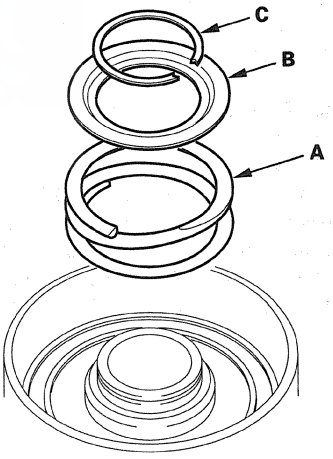

7. Install the clutch spring compressor set.

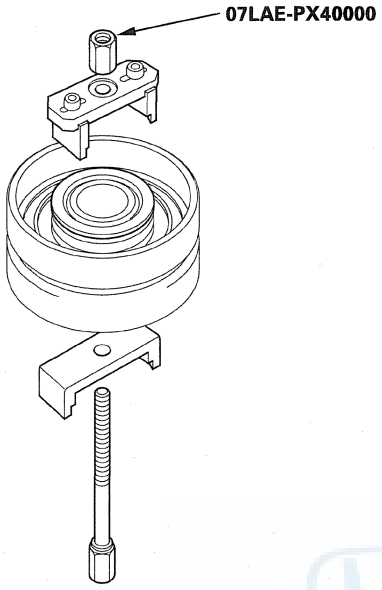

8. Be sure the clutch spring compressor attachment (A) is adjusted to make full contact with the spring retainer (B) on the 1st, 2nd, and 4th clutches.

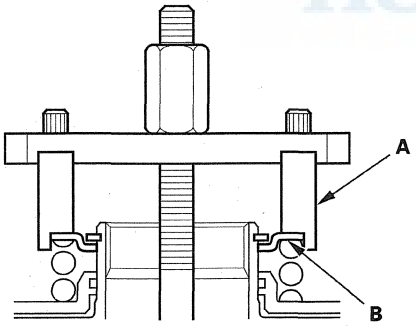

9. Check the placement of the clutch spring compressor attachment. If either end of the clutch spring compressor attachment is set over an area of the spring retainer that is unsupported by the return spring, reset the clutch spring compressor attachment over the proper position.

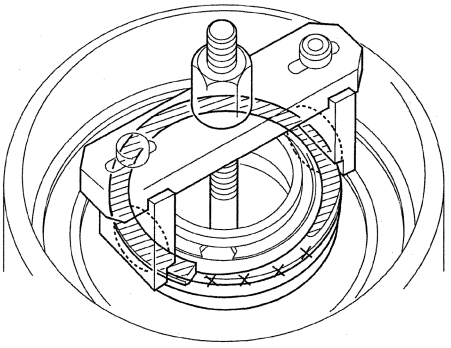

10. Set the clutch spring compressor attachment (A) on the spring retainer (B) of the 3rd and 5th clutches so the clutch spring compressor attachment works on the clutch return spring (C).

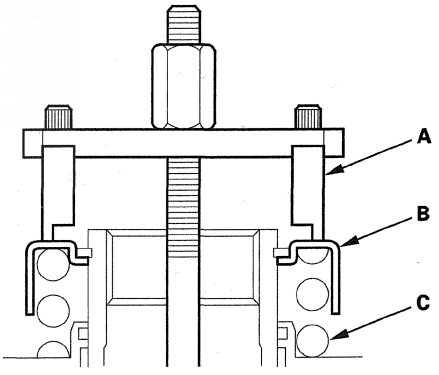

(cont'd)

Clutch Reassembly (cont'd)

11. Check the placement of the clutch spring compressor attachment. If either end of the clutch spring compressor attachment is not set over the clutch return spring end (A), reset the clutch spring compressor attachment over the return spring end.

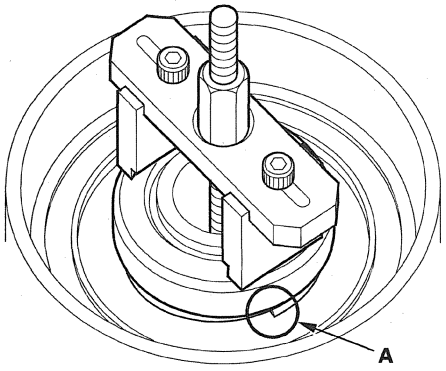

12. Compress the return spring until the snap ring can be installed.

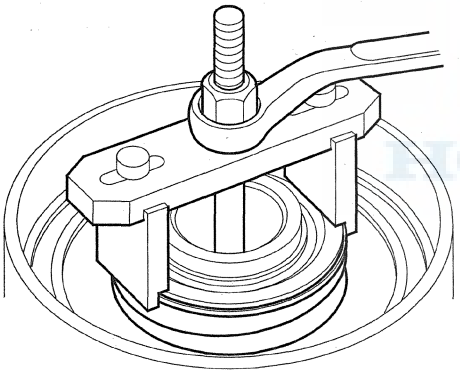

13. Install the snap ring with snap ring pliers.

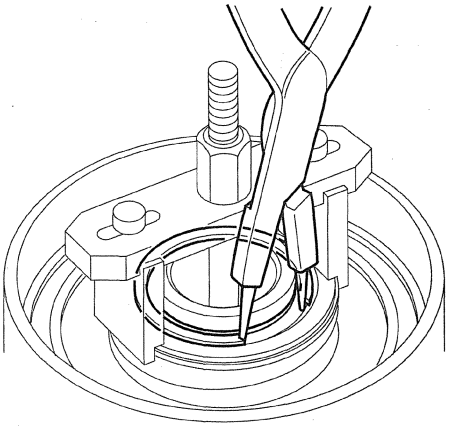

14. Remove the clutch spring compressor set.

15. Install the 1st-hold clutch flat-plate (A), and alternately install the clutch discs (B) (3) and clutch wave-plates (C) (2) starting with the disc in the 1st/1st-hold clutch drum (D), then install 1st-hold clutch plate B (E) with the flat side down on the top disc.

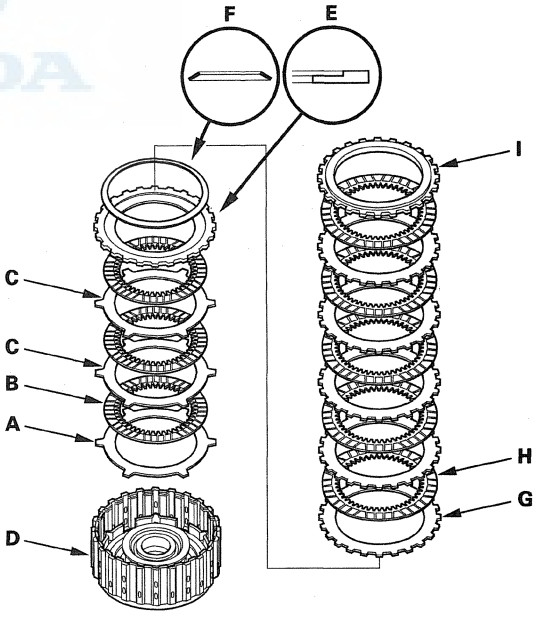

16. Install the disc spring (F) on 1st-hold clutch plate B in the direction shown. Starting with the 1st clutch wave-plate, alternately install the wave-plates (G) (5) and discs (H) (5), then install the clutch end-plate (I) with the flat side down on the top disc.

17. Starting with the 2nd clutch flat-plate, alternately install the flat-plates (A) (4) and discs (B) (4) in the 2nd clutch drum (C), and alternately install the wave-plates (D) (3) and discs (B) (3). Install the clutch end-plate (E) with the flat side down on the top disc.

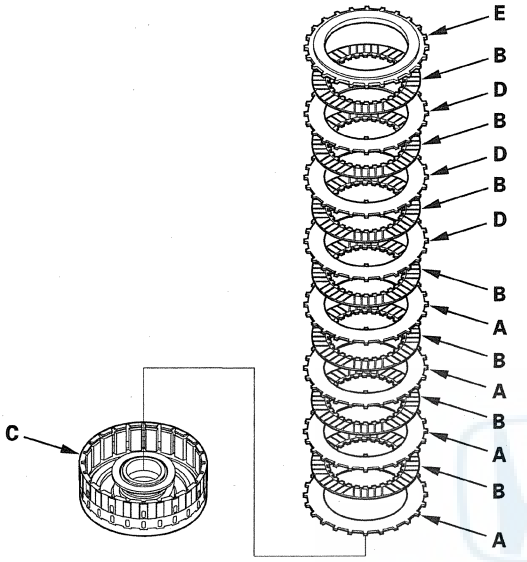

18. Starting with the 3rd clutch flat-plate, alternately install the flat-plates (A) (3) and discs (B) (3) in the 3rd clutch drum (C), and alternately install the wave-plates (D) (3) and discs (B) (3). Install the clutch end-plate (E) with the flat side down on the top disc.

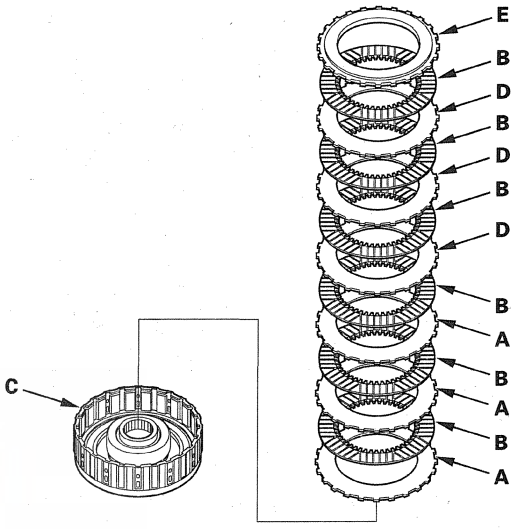

19. Install the disc spring (A) in the 4th clutch drum (B) in the direction shown. Starting with the 4th clutch flat-plate, alternately install the flat-plates (C) (3) and discs (D) (3), and alternately install the wave-plates (E) (2) and discs (D) (2). Install the clutch end-plate (F) with the flat side down on the top disc.

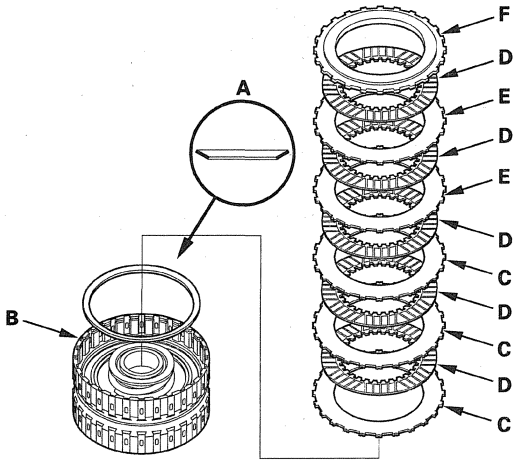

(cont'd)

Clutch Reassembly (cont'd)

20. Install the disc spring (A) in the 5th clutch drum (B) in the direction shown. Starting with the 5th clutch flat-plate, alternately install the flat-plates (C) (3) and discs (D) (3), and alternately install the wave-plates (E) (2) and discs (D) (2). Install the clutch end-plate (F) with the flat side down on the top disc.

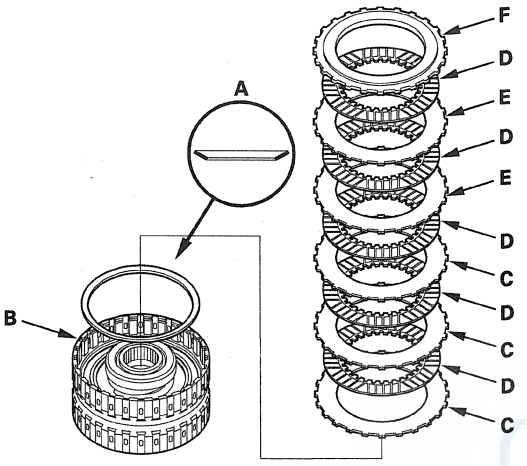

21. Install the snap ring with a screwdriver to secure the clutch end-plate.

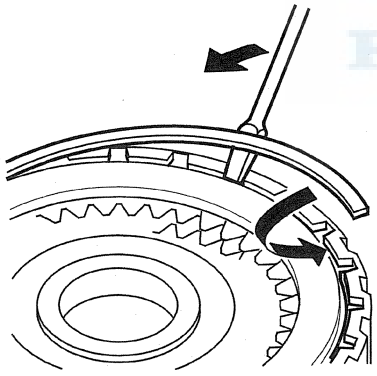

22. Check that the clutch piston moves by applying air pressure into the fluid passage.

Transmission Reassembly

Special Tools Required
Mainshaft holder 07GAB-PF50101 or 07GAB-PF50100

1. Make sure that the ATF magnet is cleaned and installed in the torque converter housing. Clean and install the ATF magnet, If necessary.

Bolt Tightening Torque
6 x 1.0 mm: 12 N·m (1.2 kgf·m, 8.7 lbf·ft)
8 x 1.25 mm: 18 N·m (1.8 kgf·m, 13 lbf·ft)

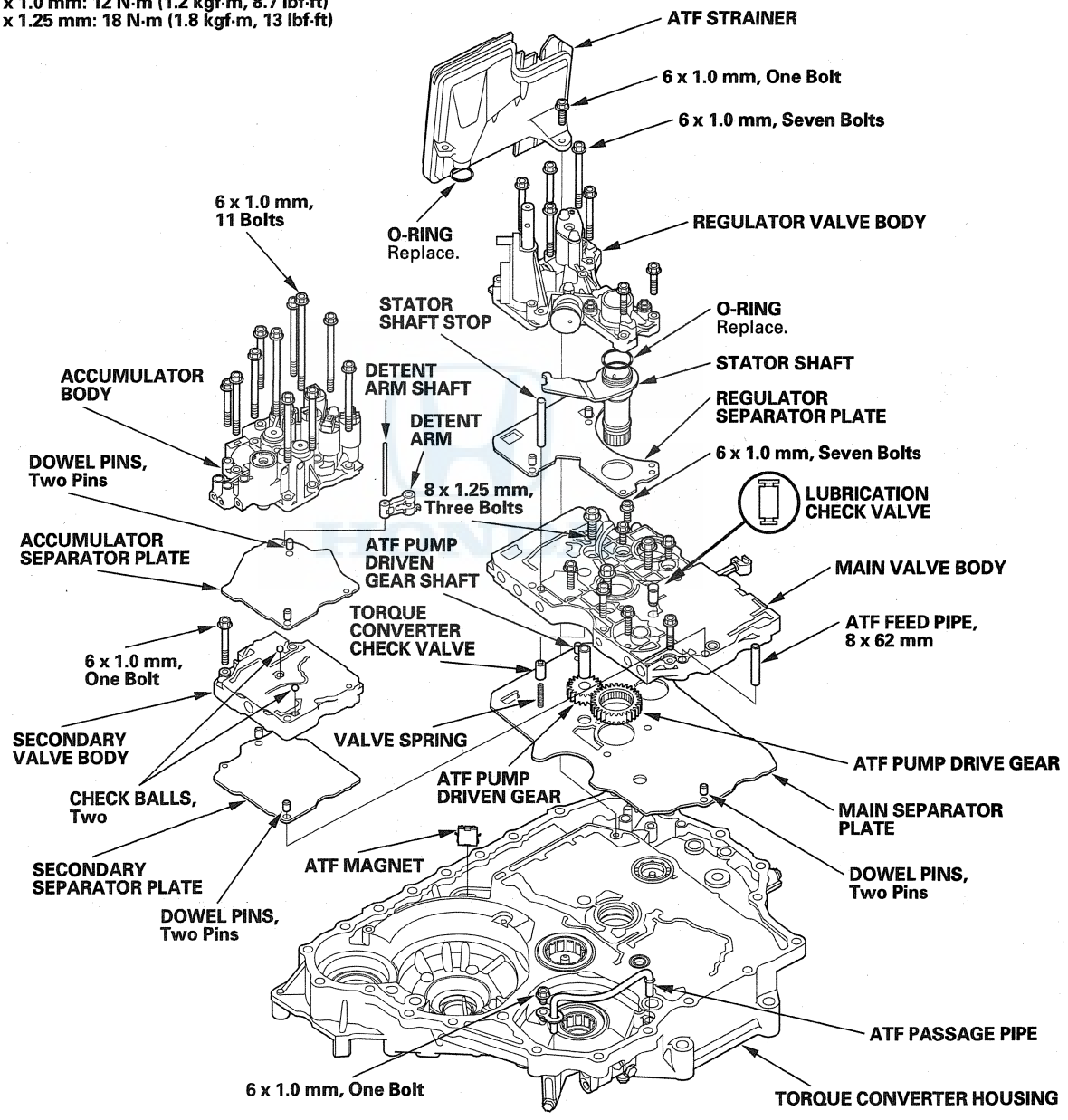

(cont'd)

Transmission Reassembly (cont'd)

2. Install the main separator plate and the two dowel pins on the torque converter housing. Then install the ATF pump drive gear (A), driven gear (B), and ATF pump driven gear shaft (C). Install the ATF pump driven gear with its grooved and chamfered side facing down.

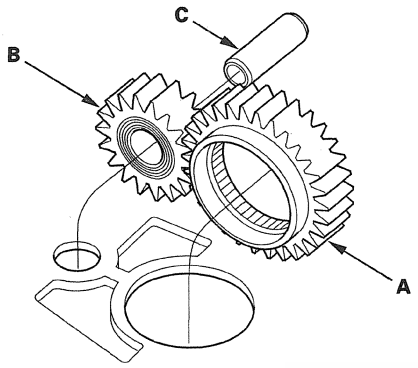

3. Install the torque converter check valve spring and valve in the torque converter housing.

4. Install the main valve body (seven 6 mm bolts and three 8 mm bolts). Make sure the ATF pump drive gear (A) rotates smoothly in the normal operating direction, and the ATF pump driven gear shaft (C) moves smoothly in the axial and normal operating direction.

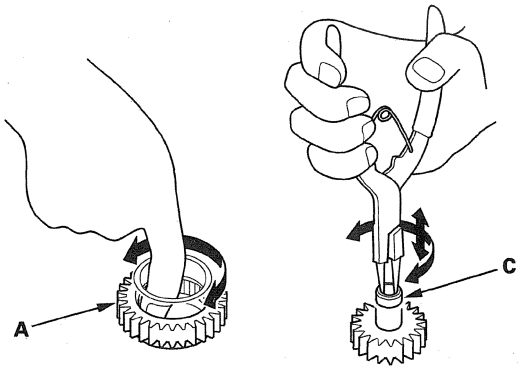

5. If the ATF pump drive gear and ATF pump driven gear shaft do not move smoothly, loosen the main valve body bolts. Realign the ATF pump driven gear shaft, and retighten the bolts to the specified torques, then recheck. Failure to align the ATF pump driven gear shaft correctly will result in a seized ATF pump drive gear or ATF pump driven gear shaft.

6. Install the lubrication check valve in the main valve body, in the direction shown in the exploded view.

7. Install the secondary separator plate and the two dowel pins on the main valve body, and install the secondary valve body (one bolt).

8. Install the two check balls in the secondary valve body.

9. Install the accumulator separator plate and the two dowel pins on the secondary valve body.

10. Position the detent arm on the accumulator separator plate, and install the detent arm shaft into the detent arm through the separator plates to the main valve body.

11. Install the 8 x 62 mm ATF feed pipes in the main valve body, and install the accumulator body (11 bolts).

12. Install the regulator separator plate and the two dowel pins on the main valve body.

13. Install the stator shaft with the new O-ring, and install the regulator valve body (seven bolts).

14. Install the stator shaft stop in the main valve body.

15. Install the ATF strainer with the new O-ring (one bolt).

16. Install the ATF passage pipe (one bolt) in the torque converter housing.

17. Install the intermediary shaft (A) into the main valve body, and install the 26.5 mm washer (B) on the top of the intermediary shaft.

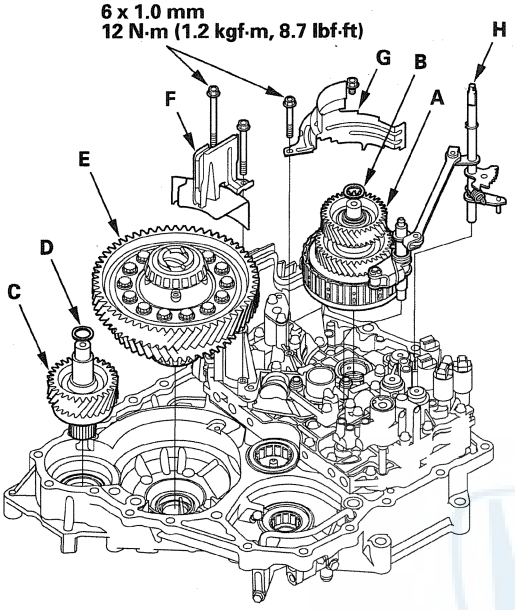

18. Install the transfer output shaft (C) in the torque converter housing, and install the thrust shim (D) on the top of the transfer output shaft.

19. Install the differential assembly (E) in the torque converter housing.

20. Install the baffle plate (F), and make sure if the differential is clear of the baffle plate.

21. Install the baffle plate (G), and make sure if the intermediary shaft is clear of the baffle plate.

22. Install the control shaft and park lever link (H).

23. Assemble the mainshaft, countershaft, and secondary shaft.

24. Install the needle bearing (A) on the secondary shaft roller bearing in the torque converter housing.

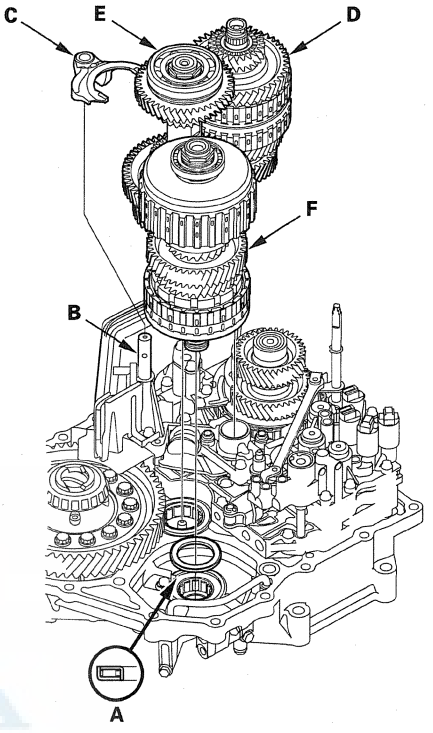

25. Turn the shift fork shaft (B) so the large chamfered hole is facing the fork bolt hole of the shift fork.

26. Engage the shift fork (C) with the reverse selector on the countershaft, and join the mainshaft (D), countershaft (E), and secondary shaft (F), then install them in the torque converter housing and shift fork on the shift fork shaft.

(cont'd)

Transmission Reassembly (cont'd)

27. Secure the shift fork (A) to the shift fork shaft with the lock bolt and the new lock washer (B), then bend the lock tab of the lock washer against the bolt head.

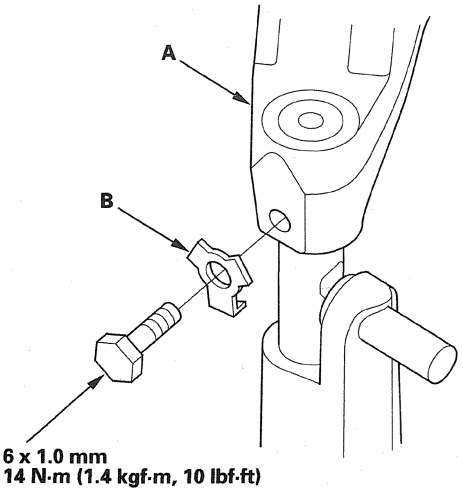

28. Install the park pawl shaft (A), pawl spring (B), park pawl (C), and park pawl stop (D).

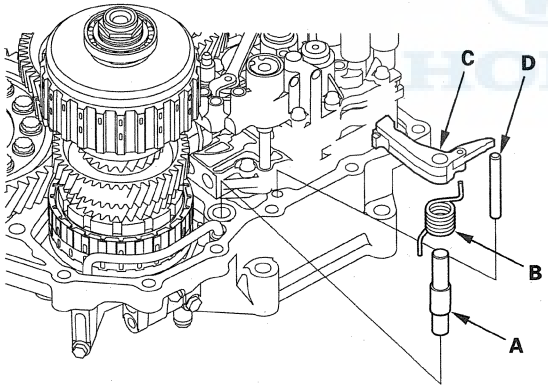

29. Align the control lever pin with the manual valve guide.

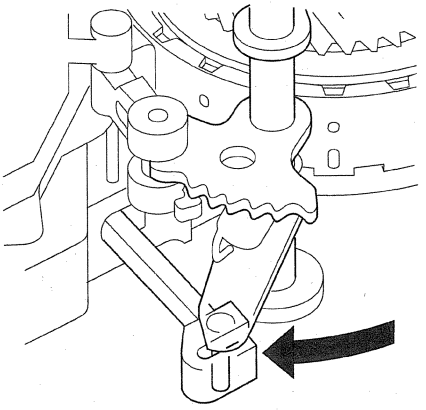

30. Hook the detent spring to the detent arm.

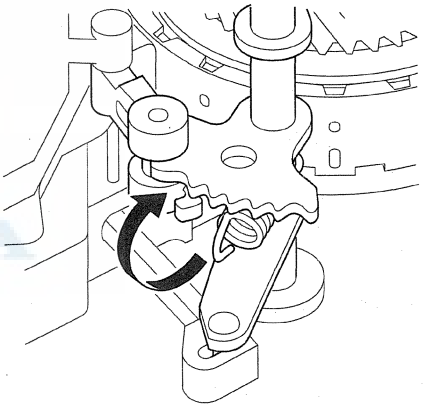

31. Install the 8 x 85 mm ATF feed pipe (A), the 8 x 151.5 mm pipes (B), and the 8 x 40 mm pipe (C) in the accumulator body.

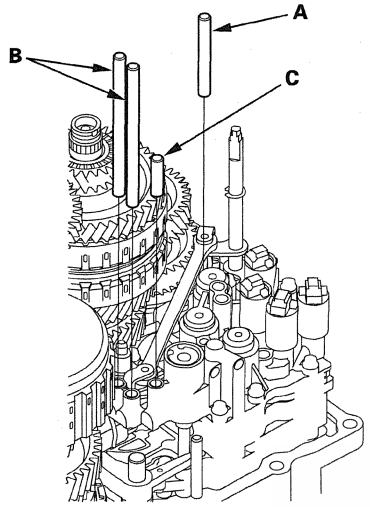

32. Install the 8 x 57.5 mm ATF feed pipe (A) and the 10 x 123 mm pipe (B) in the torque converter housing.

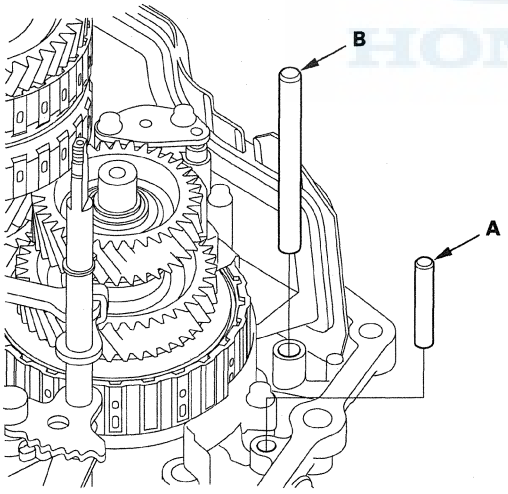

33. Install the two dowel pins (A) and the new gasket (B) on the torque converter housing (C).

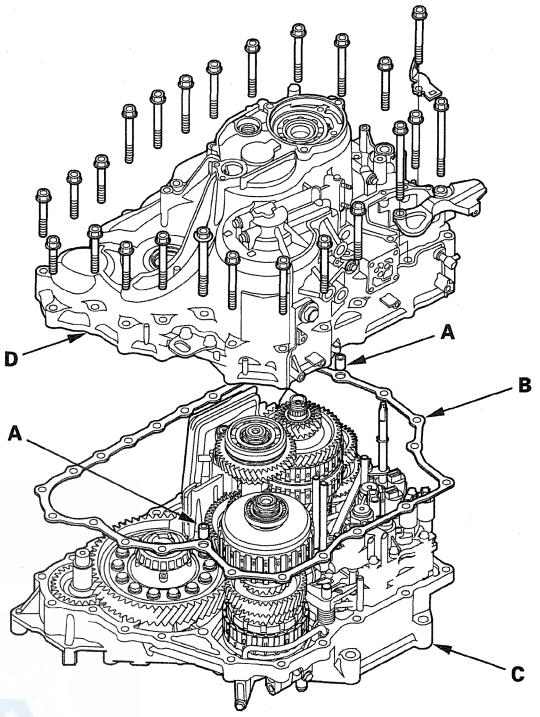

34. Place the transmission housing (D) on the torque converter housing.

35. Wrap a screwdriver tip with tape to prevent damage to the reverse idler gear teeth. Engage the reverse idler gear with the reverse gears by rotating the idler gear with the screwdriver.

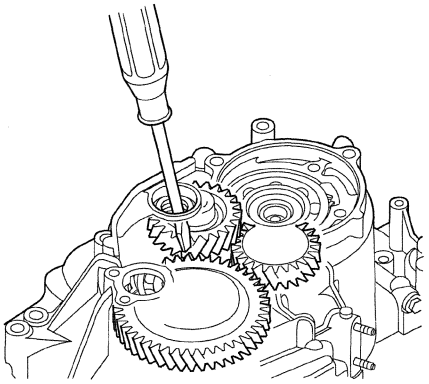

(cont'd)

Transmission Reassembly (cont'd)

36. While expanding the snap ring of the countershaft bearing using snap ring pliers, install the transmission housing onto the bearing part-way. Then release the snap ring pliers, and push down on the housing until it bottoms and the snap ring snaps into place in the transmission housing snap ring groove.

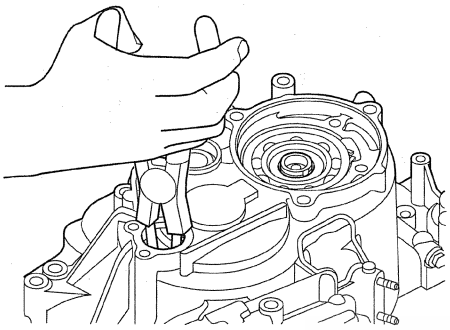

37. Install the transmission housing mounting bolts (A) (21 bolts) along with the transmission hanger (B) and ground terminal bracket (C), and tighten the bolts in at least two steps in a criss-cross pattern to 44 N·m (4.5 kgf·m, 33 lbf·ft).

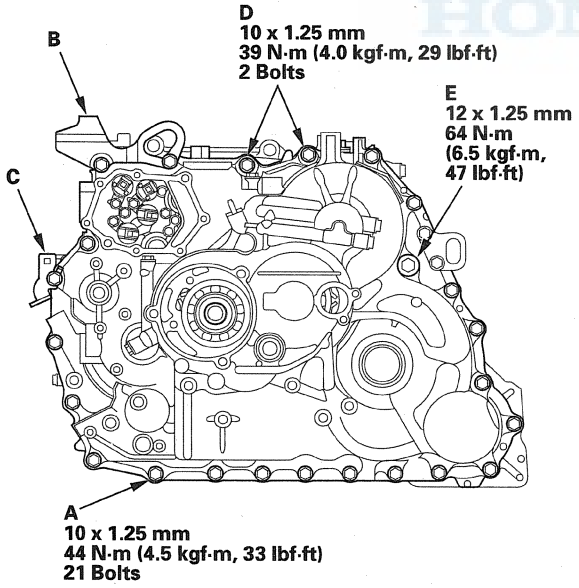

38. Install and tighten the two mounting bolts (D) to 39 N·m (4.0 kgf·m, 29 lbf·ft). Keep the mounting bolts free of grease or oil.

39. Install and tighten the 12 x 1.25 mm bolt (E) to 64 N·m (6.5 kgf·m, 47 lbf·ft).

40. Install the special tool onto the mainshaft.

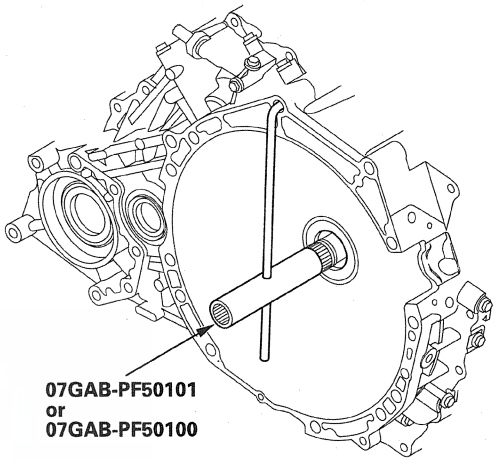

41. Install the new splined washer (A) with the marked side (B) up over the mainshaft (C), and apply ATF to surfaces of the splined washer and old locknut (D).

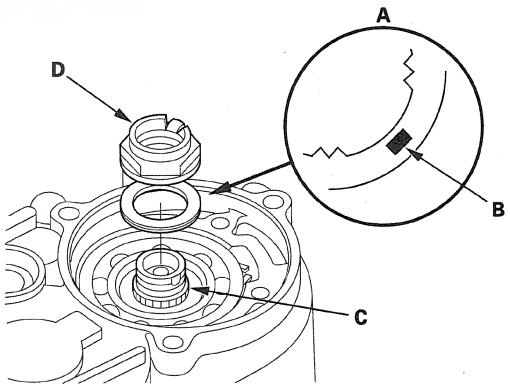

42. Install the old locknut, and tighten it to seat the lock washer to 178 N·m (18.2 kgf·m, 132 lbf·ft), then remove the old locknut.

43. Install the new locknut and tighten it to 178 N·m (18.2 kgf·m, 132 lbf·ft), then stake the locknut to a depth (A) of 0.7—1.3 mm (0.03—0.05 in.) using a 3.5 mm punch (B).

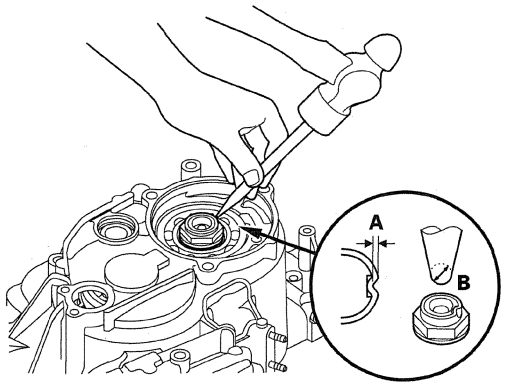

44. Install the end cover (A), dowel pin (B), and new O-ring (C).

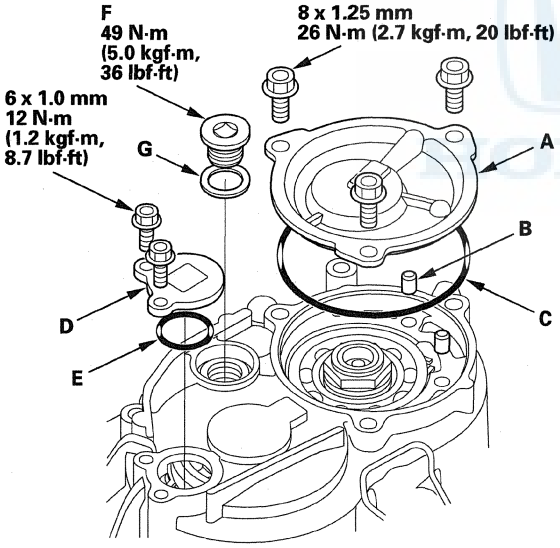

45. Install the snap ring cap (D) and the new O-ring (E).

46. Apply thread lock sealant to the threads of the sealing plug (F), and install the sealing plug and the new sealing washer (G).

47. Install the new O-ring (E) on the solenoid harness connector (F).

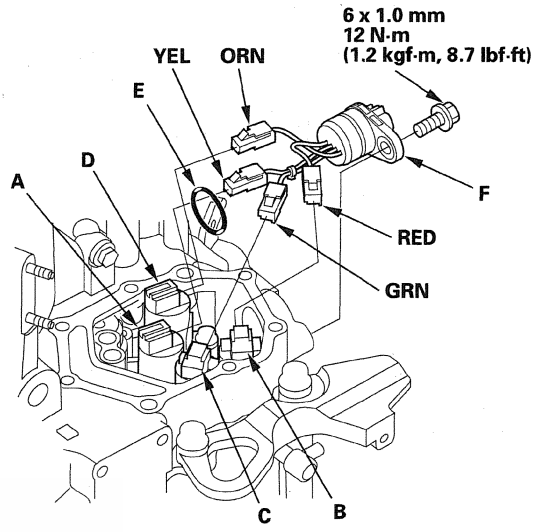

48. Route the solenoid harness through the transmission housing, and install the solenoid harness connector.

49. Connect the harness terminals to the solenoid:

- YEL wire connector to shift solenoid valve A.
- GRN wire connector to shift solenoid valve C.
- RED wire connector to shift solenoid valve B.
- ORN wire connector to shift solenoid valve D.

50. Secure the solenoid harness connector with the bolt on the transmission housing.

(cont'd)

Transmission Reassembly (cont'd)

51. Install the solenoid valve cover (A) with the two dowel pins (B) and the new gasket (C), and secure it with the seven bolts.

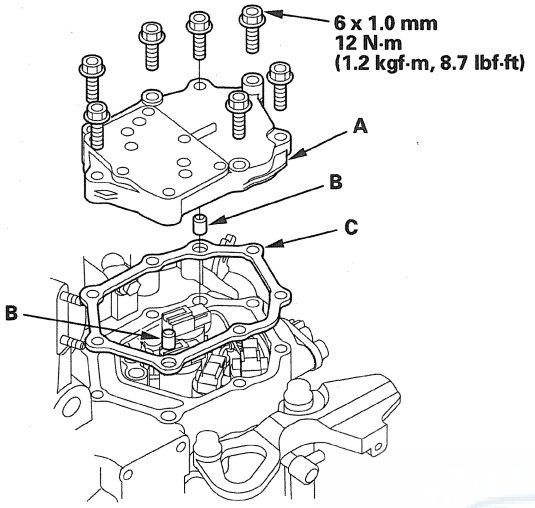

52. Place the new gasket (A) on the solenoid valve cover, then install the 8 x 105.8 mm ATF feed pipe (B) and the 8 x 58.3 mm pipes (C) with the filter end in the transmission housing.

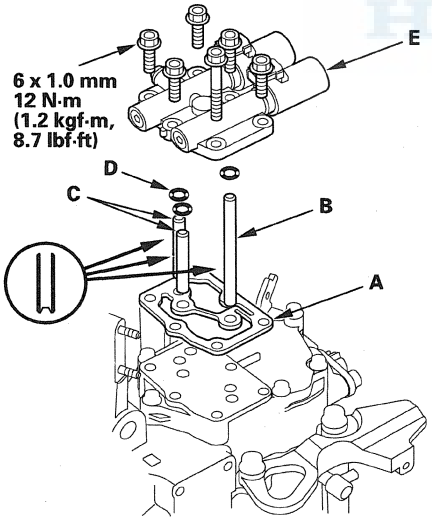

53. Install the new O-rings (D) over the ATF feed pipes, and install A/T clutch pressure control solenoid valves A and B (E).

54. Install the 8 x 53 mm ATF joint pipe (A) with the filter end into its mounting hole (B).

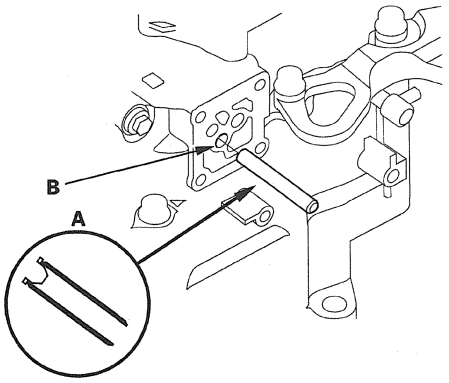

55. Check the height (A) of the 8 x 53 mm ATF joint pipe (B) between the top (C) of the pipe and the solenoid valve body mounting surface (D). The height is about 7 mm (0.3 in). If the height is over 7 mm (0.3 in), install the pipe securely until it stops the accumulator body.

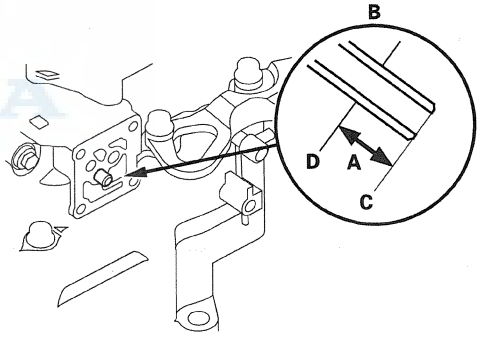

56. Install the new gasket (A) on the transmission housing. Install the 8 x 34.5 mm ATF pipe (B) with the filter end in the transmission housing, and install the 8 x 25.5 mm ATF pipe (D).

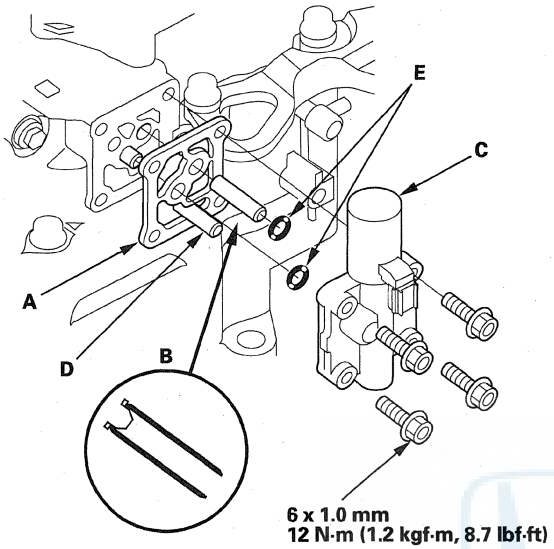

57. Install new O-rings (E) over the ATF joint pipes.

58. Install A/T clutch pressure control solenoid valve C.

59. With a 6.0 mm wrench, turn the control shaft fully counterclockwise (viewed from the shaft end) to the P position. Turn the control shaft back two click-stopped positions so that it is in the N position.

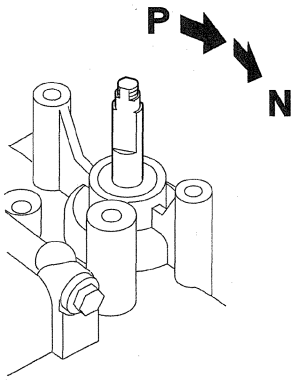

60. Set the transmission range switch (A) to the N position. The transmission range switch clicks in the N position, and the selector control shaft hole (B) aligns with the N positioning line.

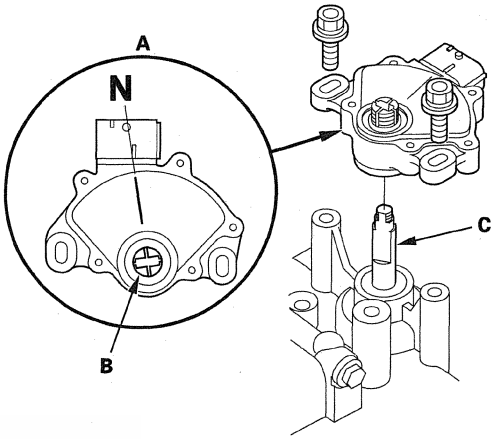

61. Install the transmission range switch gently over the selector control shaft (C), and install the bolts loosely.

62. Install the new lock washer (A) over the selector control shaft (B) by aligning the indicator tab (C) of the lock washer with the N positioning line (D) on the transmission range switch (E), and install the locknut (F).

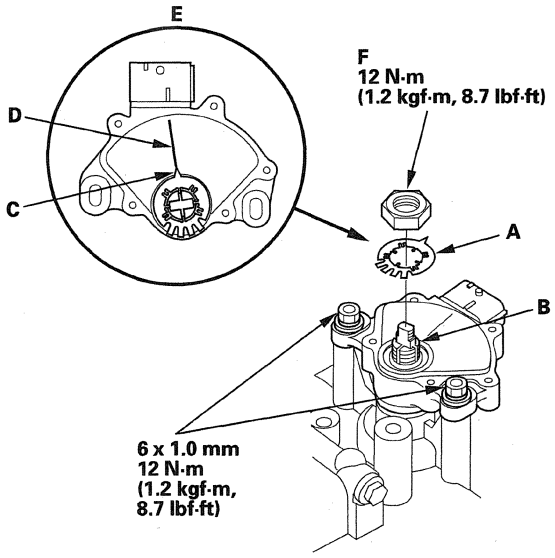

(cont'd)

Transmission Reassembly (cont'd)

63. Push the locknut against the transmission housing to seat the range switch into the selector control shaft, and tighten the locknut to 12 N·m (1.2 kgf·m, 8.7 lbf·ft) while holding the selector control shaft with a 6 mm wrench, then bend the lock tabs against the locknut.

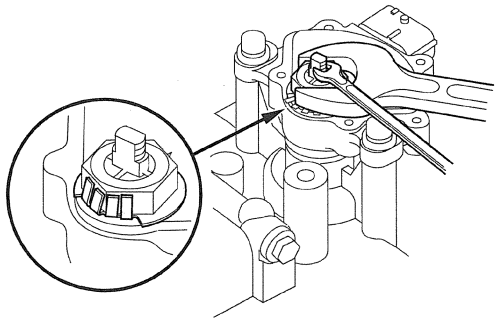

64. Tighten the range switch mounting bolts to 12 N·m (1.2 kgf·m, 8.7 lbf·ft).

65. Install the control lever (A), spring washer (B), lock washer (C), and locknut (D) on the selector control shaft (E). Bend the lock tab of the lock washer against the locknut.

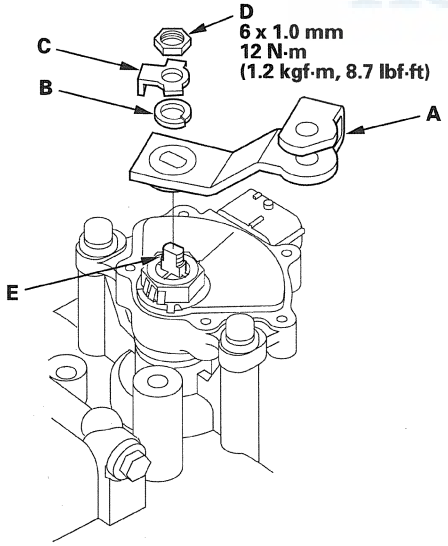

66. Install the new O-ring (A) on the input shaft (mainshaft) speed sensor (B), and install the input shaft (mainshaft) speed sensor.

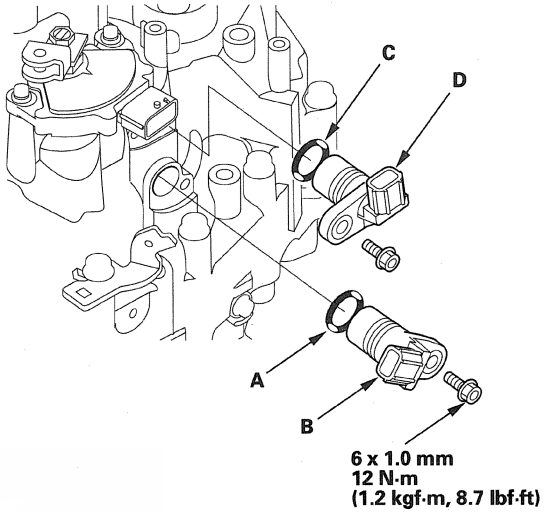

67. Install the new O-ring (C) on the output shaft (countershaft) speed sensor (D), and install the output shaft (coutershaft) speed sensor.

68. Install the 4th clutch transmission fluid pressure switch (A) with the new sealing washer (B). Tighten the switch by gripping the metal part.

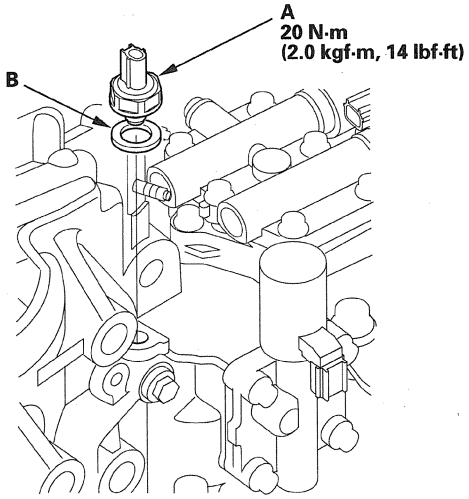

69. Install the 3rd clutch transmission fluid pressure switch (A) with the new sealing washer (B). Tighten the switch by gripping the metal part.

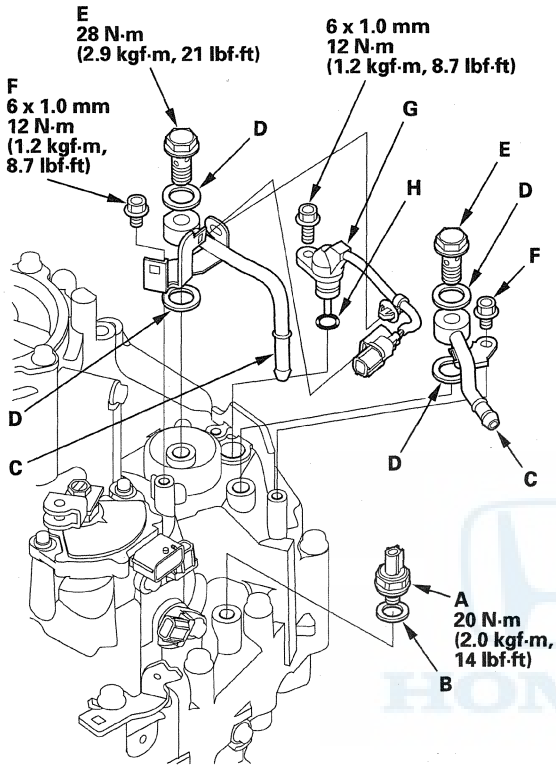

70. Install the ATF cooler lines (C) with the new sealing washers (D) and the line bolts (E).

71. Secure the ATF lines with the 6.0 mm bolts (F). Tighten the bolt to 12 N·m (1.2 kgf·m, 8.7 lbf·ft).

72. Install the ATF temperature sensor (G) with the new O-ring (H). Install the harness clamp on the clamp bracket, and install the connector on the connector bracket.

73. Install the 2nd clutch transmission fluid pressure switch (A) with the new sealing washer (B). Tighten the switch by gripping the metal part.

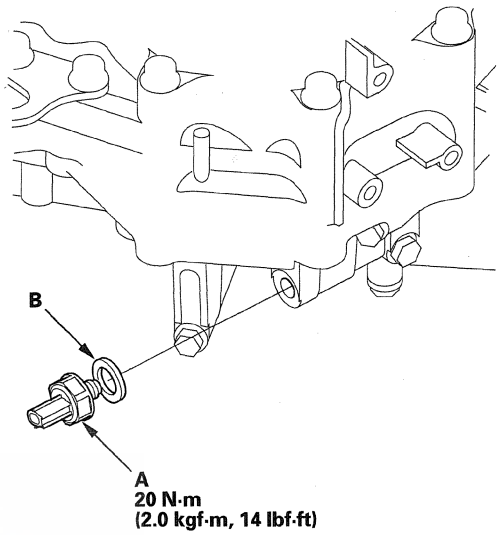

74. Install the ATF dipstick guide tube (A) with the new O-ring (B).

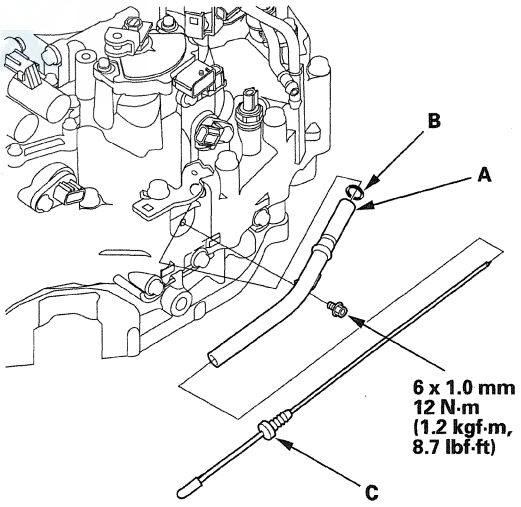

75. Install the ATF dipstick (C) in the guide tube.

Component Location Index

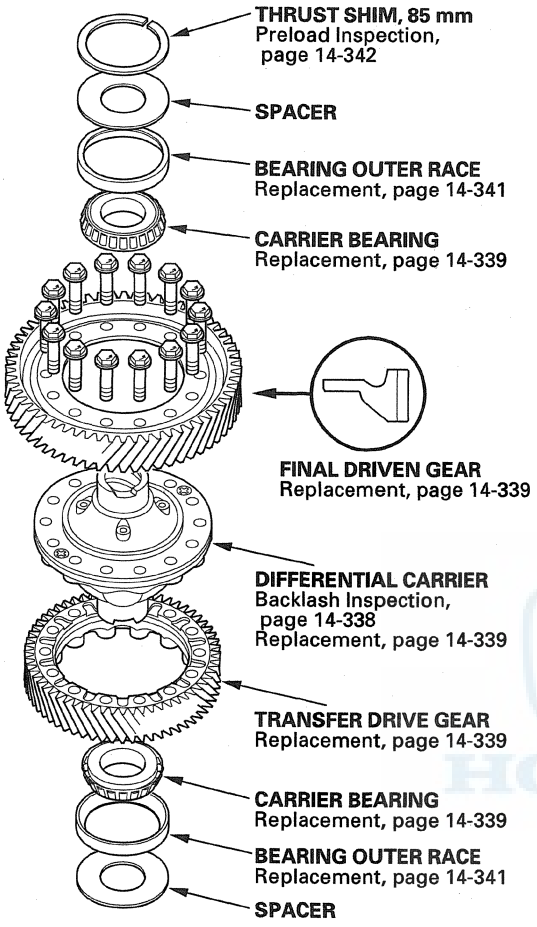

Backlash Inspection

1. Install the driveshaft and intermediate shaft into the differential assembly.
2. Carefully clamp the driveshaft (A) in a vise (B).

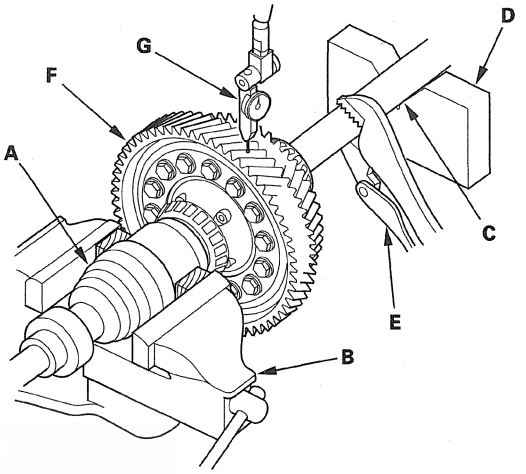

3. Place the intermediate shaft (C) on a V-block (D), then hold the intermediate shaft with locking pliers (E).
4. Measure backlash of the final driven gear (F) with a dial indicator (G). If the backlash is not within the standard, replace the differential carrier.

Standard (New): 1.2—1.8 mm (0.047—0.071 in)

Differential Carrier, Final Driven Gear, and Transfer Drive Gear Replacement

NOTE: Inspect and adjust the bearing preload whenever the carrier is replaced.

1. Remove the final driven gear (A) and transfer drive gear (B) from the differential carrier (C).

   NOTE: The final driven gear bolts have left-hand threads.

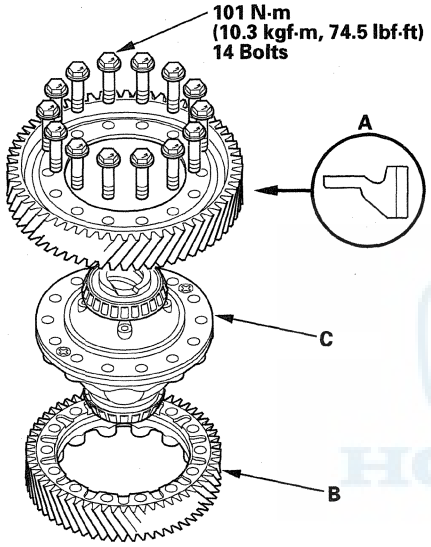

2. Install the final driven gear with the chamfered side on the inner bore facing the differential carrier.

3. Install the bolts through the differential carrier to the transfer drive gear.

4. Tighten the bolts to the specified torque in a crisscross pattern.

Carrier Bearing Replacement

Special Tools Required
Attachment, 45 x 55 mm 07MAD-PR90100

NOTE:
- The bearing and outer race should be replaced as a set.
- Inspect and adjust the bearing preload whenever the bearing is replaced.
- Check the bearing for wear and rough rotation. If the bearing is OK, removal is not necessary.

1. Remove the carrier bearing (A) with a commercially available bearing puller (B), bearing separator (C), and stepped adapter (D).

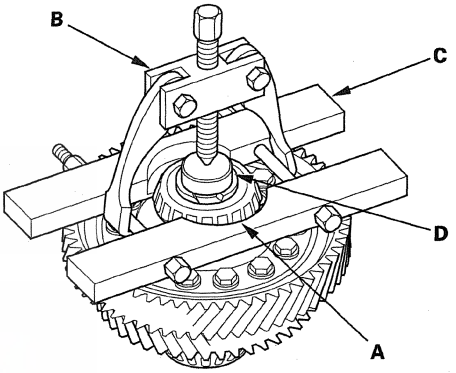

2. Install the new carrier bearings using the attachment (45 x 55 mm) and a press.

   NOTE:
   - Press the bearing on until it bottoms.
   - Use the small end of the attachment (45 x 55 mm) to install the bearings.
   - Press the bearing on securely so there is no clearance between the bearing and the differential carrier.

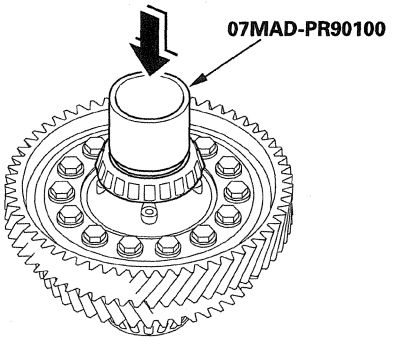

Oil Seal Replacement

Special Tools Required
- Driver 07749-0010000
- Oil seal driver attachment 07GAD-PG40100
- Oil seal driver attachment 07JAD-PH80101

1. Remove the oil seal from the transmission housing.

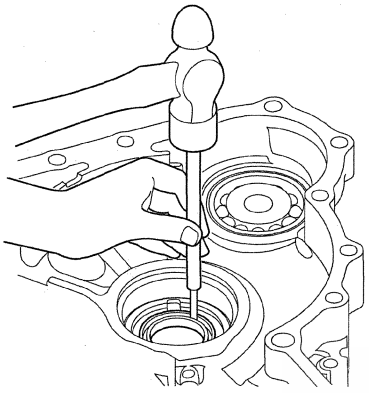

2. Remove the oil seal from the torque converter housing.

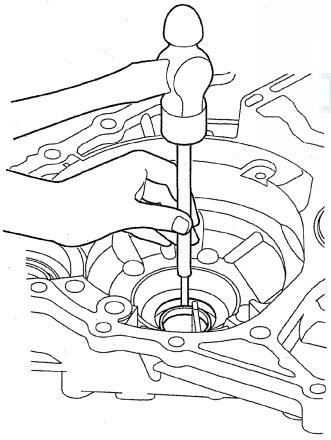

3. Install the new oil seal flush to the transmission housing using the drive and the oil seal driver attachment.

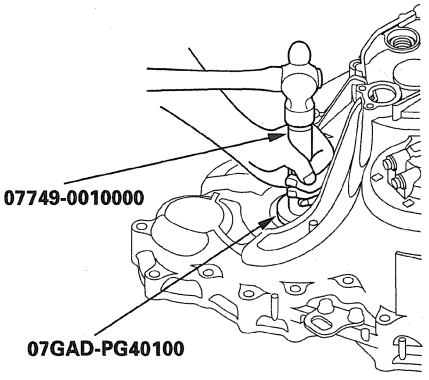

4. Install the new oil seal to the torque converter housing using the drive and the oil seal driver attachment.

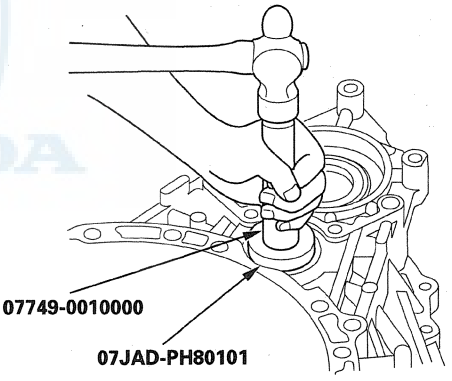

Carrier Bearing Outer Race Replacement

Special Tools Required
- Driver 07749-0010000
- Attachment, 83 mm 07HAD-SG00100
- Attachment, 78 x 80 mm 07NAD-PX40100

NOTE:
- Replace the bearing with a new one whenever the outer race is replaced.
- Do not use shim(s) on the torque converter housing side.
- Adjust the preload after replacing the bearing and the outer race.
- Coat all parts with ATF during installation.

1. Remove the bearing outer race (A), spacer (B), and 85 mm thrust shim (C) from the transmission housing (D) by heating the housing to about 212 °F (100 °C) with a heat gun (E). Do not heat the housing more than 212 °F (100 °C).

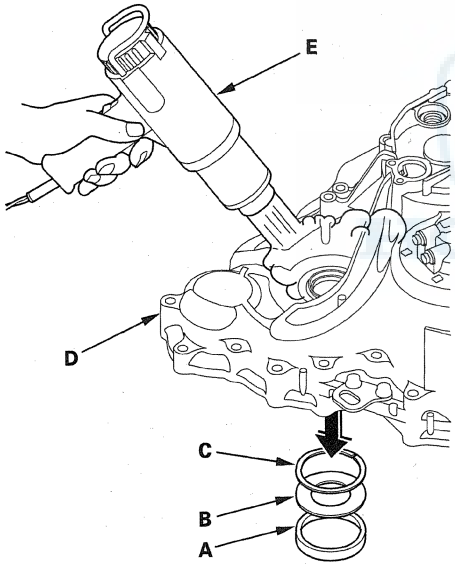

2. Install the 85 mm thrust shim (A), spacer (B), and outer race (C) in the transmission housing (D).

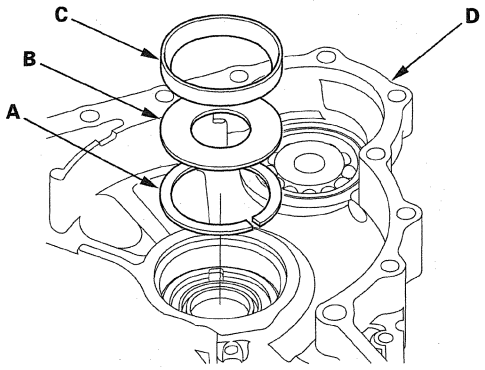

3. Using the driver and the attachment (83 mm), drive the outer race securely in the housing so there is no clearance between the outer race, spacer, shim, and housing.

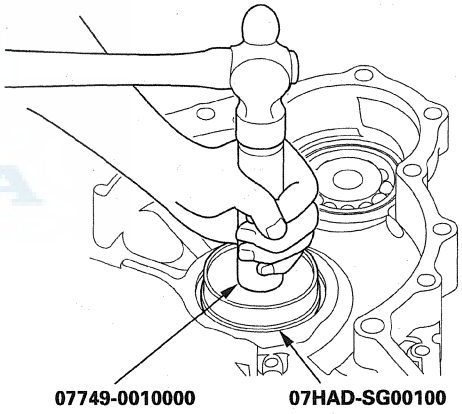

(cont'd)

Carrier Bearing Outer Race Replacement (cont'd)

4. Remove the plate (A), and remove the bearing outer race (B) and spacer (C) from the torque converter housing (D).

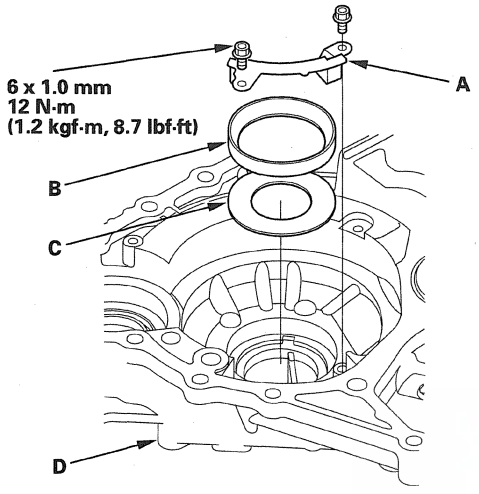

5. Install the spacer and the new outer race in the torque converter housing.

6. Drive the bearing outer race securely in the housing using the driver and the attachment (78 x 80 mm).

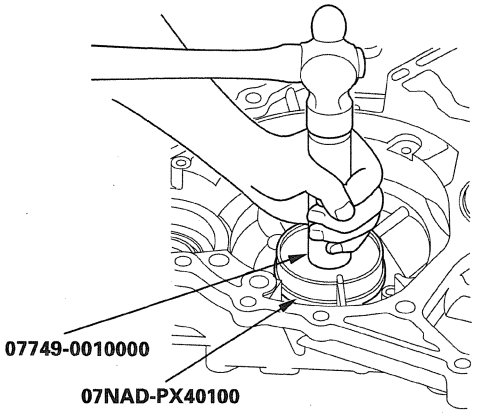

7. Install the plate over the outer race in the torque converter housing.

Carrier Bearing Preload Inspection

Special Tools Required
- Driver 07749-0010000
- Attachment, 83 mm 07HAD-SG00100
- Preload inspection tool 070AJ-0020101

NOTE: If the transmission housing, torque converter housing, differential carrier, tapered roller bearing, bearing outer race, or thrust shim were replaced, the bearing preload must be adjusted.

1. Remove the bearing outer race (A), spacer (B), and 85 mm thrust shim (C) from the transmission housing (D) by heating the housing to about 212 °F (100 °C) with a heat gun (E). Do not heat the housing more than 212 °F (100 °C).

   NOTE: Let the transmission housing cool to room temperature before adjusting the bearing preload.

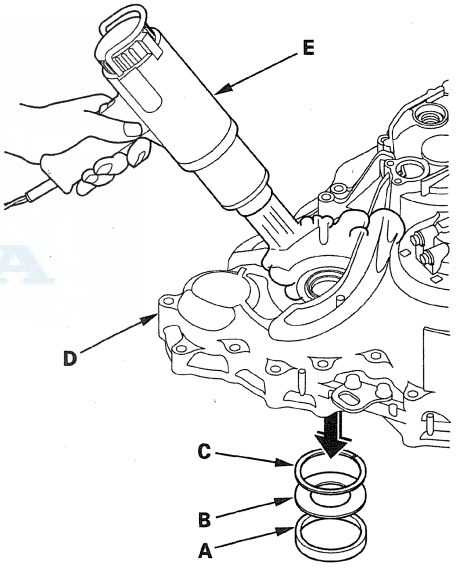

2. Replace the tapered roller bearing when the outer race is to be replaced.

3. Do not use a shim on the torque converter housing side.

4. Install the 85 mm thrust shim (A) in the transmission housing (B). If you replace the 85 mm thrust shim with a new one, use the same thickness shim as the old one.

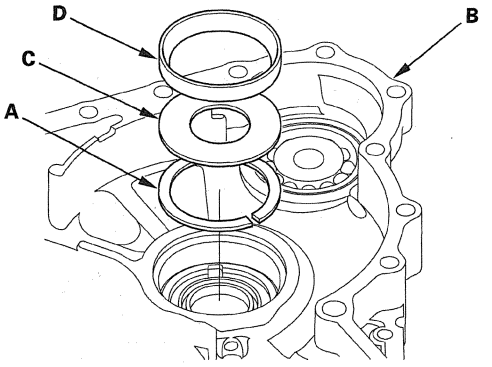

5. Install the spacer (C), and the bearing outer race (D) in the transmission housing.

6. Drive the outer race securely in the housing using the driver and the attachment (83 mm) so there is no clearance between the outer race, spacer, shim, and housing.

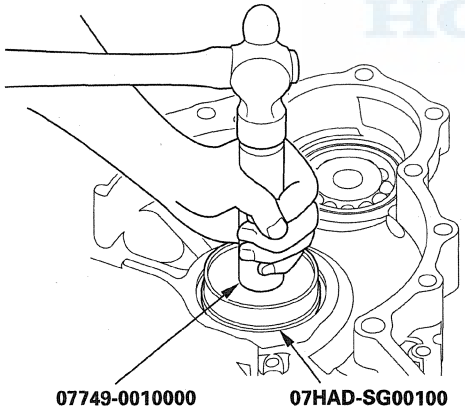

7. Install the differential assembly (A) in the torque converter housing (B), and install the gasket (C) and the two dowel pins (D) on the housing.

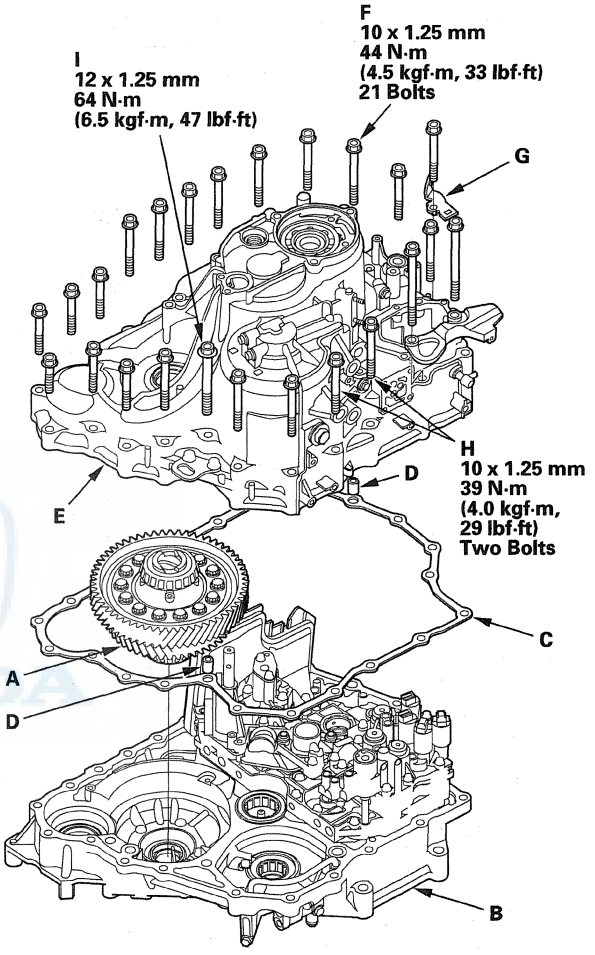

8. Install the transmission housing (E), and install the mounting bolts (F) (21 bolts) with the ground terminal bracket (G), two mounting bolts (H), and 12 x 1.25 mm bolt (I), then tighten the bolts.

(cont'd)

Carrier Bearing Preload Inspection (cont'd)

9. Rotate the differential assembly in both directions to seat the bearings.

10. Measure the starting torque of the differential assembly with the preload inspection tool, a torque wrench (A), and a socket (B). Measure the starting torque at normal room temperature in both directions.

    Standard
    New Bearings:
    3.9—5.1 N·m (40—52 kgf·cm, 35—45 lbf·in)
    Reused Bearings:
    3.6—4.8 N·m (37—49 kgf·cm, 32—43 lbf·in)

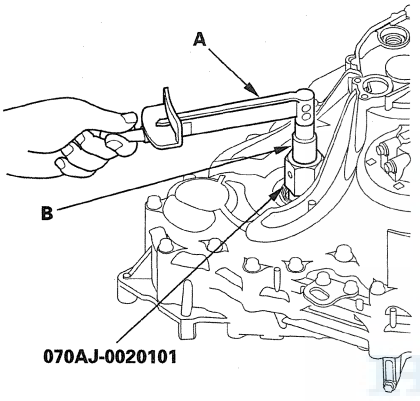

11. If the measurement is out of standard, remove the thrust shim and measure its thickness.

12. Select a new thrust shim. To increase the starting torque, increase thickness of the thrust shim. To decrease the starting torque, decrease the thickness of the thrust shim.
    Changing the shim to the next size will increase or decrease the starting torque about 0.5—0.6 N·m (5—6 kgf·cm, 5—5 lbf·in).

THRUST SHIM, 85 mm

No.	Thickness
A	1.350 mm (0.0531 in)
B	1.375 mm (0.0541 in)
C	1.400 mm (0.0551 in)
D	1.425 mm (0.0561 in)
E	1.450 mm (0.0571 in)
F	1.475 mm (0.0581 in)
G	1.500 mm (0.0591 in)
H	1.525 mm (0.0600 in)
I	1.550 mm (0.0610 in)
J	1.575 mm (0.0620 in)
K	1.600 mm (0.0630 in)

(cont'd)

THRUST SHIM, 85 mm (cont'd)

No.	Thickness
L	1.625 mm (0.0640 in)
M	1.650 mm (0.0650 in)
N	1.675 mm (0.0659 in)
O	1.700 mm (0.0669 in)
P	1.725 mm (0.0679 in)
Q	1.750 mm (0.0689 in)
R	1.775 mm (0.0699 in)
S	1.800 mm (0.0709 in)
T	1.825 mm (0.0719 in)
U	1.850 mm (0.0728 in)
V	1.875 mm (0.0738 in)
W	1.900 mm (0.0748 in)
X	1.925 mm (0.0758 in)
Y	1.950 mm (0.0768 in)
Z	1.975 mm (0.0778 in)
AA	2.000 mm (0.0787 in)
AB	2.025 mm (0.0797 in)
AC	2.050 mm (0.0807 in)
AD	2.075 mm (0.0817 in)
AE	2.100 mm (0.0827 in)
AF	2.125 mm (0.0837 in)
AG	2.150 mm (0.0846 in)
AH	2.175 mm (0.0856 in)
AI	2.200 mm (0.0866 in)
AJ	2.225 mm (0.0876 in)
AK	2.250 mm (0.0886 in)
AL	2.275 mm (0.0896 in)
AM	2.300 mm (0.0906 in)
AN	2.325 mm (0.0915 in)
AO	2.350 mm (0.0925 in)
AP	1.250 mm (0.0492 in)
AQ	1.275 mm (0.0502 in)
AR	1.300 mm (0.0512 in)
AS	1.325 mm (0.0522 in)

13. Install the new thrust shim, then recheck the starting torque.

Component Location Index

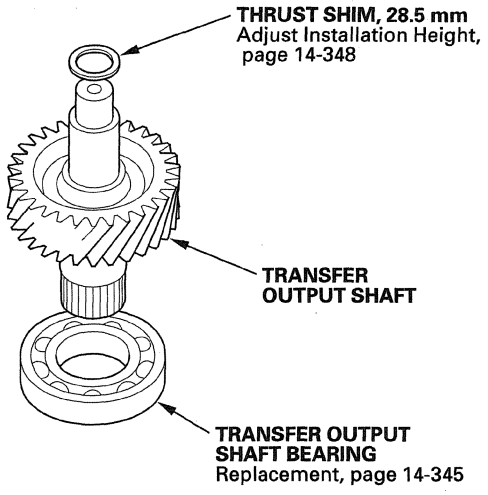

Transfer Output Shaft Bearing Replacement

Special Tools Required
Driver, 40 mm I.D. 07746-0030100

1. Remove the transfer output shaft bearing (A) with a commercially available puller (B), bearing separator (C), and shaft protector (D). Place a shaft protector between the transfer output shaft and a puller to prevent damaging the shaft.

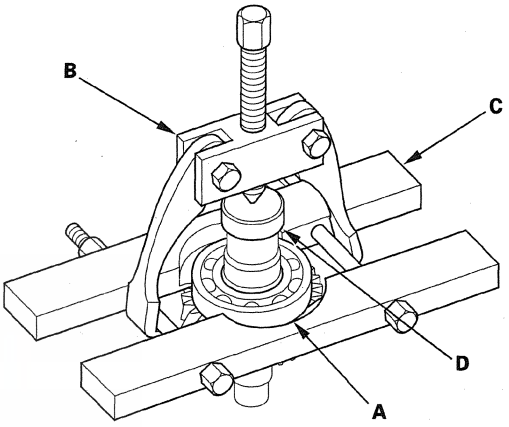

2. Install the new bearing (A) on the transfer output shaft (B) using the driver (40 mm I.D.) and a press.

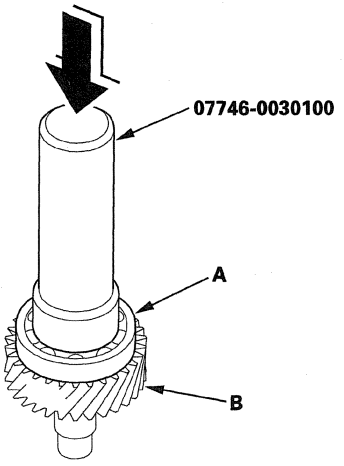

Oil Seal Replacement

Special Tools Required
- Driver 07749-0010000
- Attachment, 65 mm 07JAD-SH30100

1. Remove the oil seal from the torque converter housing.

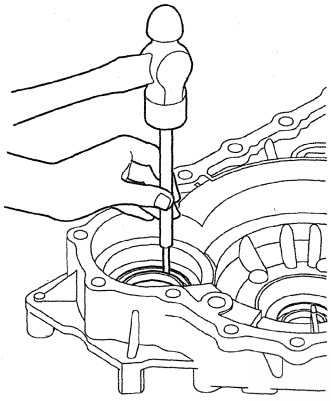

2. Install the new oil seal flush to the torque converter housing using the driver and the attachment (65 mm).

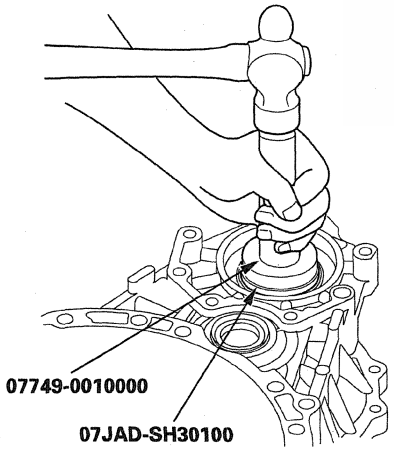

Transmission Housing Bearing Replacement

Special Tools Required
- Driver 07749-0010000
- Attachment, 72 x 75 mm 07746-0010600

1. Remove the transfer output shaft bearing (A) from the transmission housing (B) by heating the housing to about 212 °F (100 °C) with a heat gun (C). Do not heat the housing more than 212 °F (100 °C).

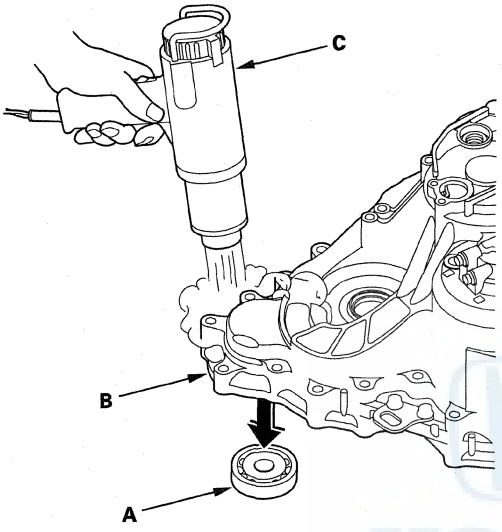

2. Install the new bearing in the housing in the direction shown.

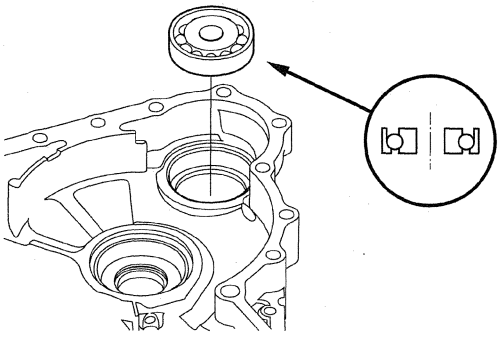

3. Drive the new bearing until it bottoms in the *housing using the driver and the attachment* (72 x 75 mm).

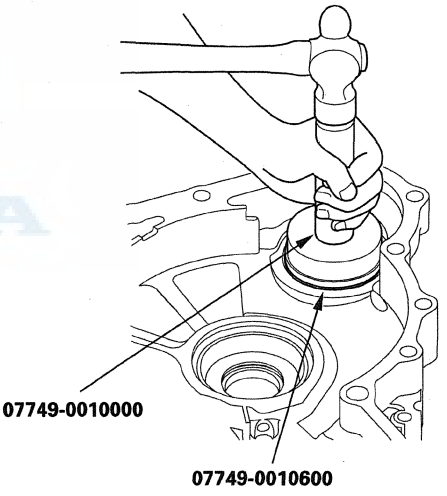

HONDA

Transfer Output Shaft Installation Height Inspection/Adjustment

NOTE: If the transfer output shaft, transfer output shaft bearing, transfer output shaft transmission housing bearing, transmission housing, or torque converter housing were replaced, adjust the transfer output shaft installation height with the 28.5 mm thrust shim.

1. Install the transfer output shaft (A) in the torque converter housing, and install the 28.5 mm thrust shim (B) on the top of the shaft. If you replace the 28.5 mm thrust shim with a new one, use the same thickness shim as the old one.

Standard: 42.81—42.85 mm (1.685—1.687 in)

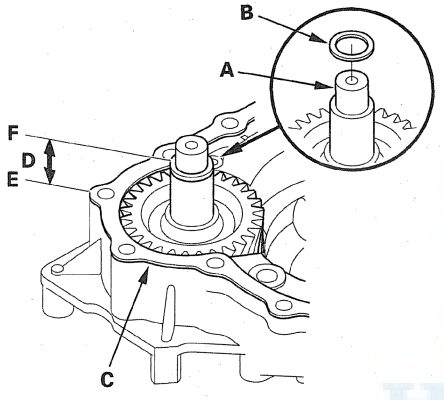

Transfer Output Shaft Cutaway View

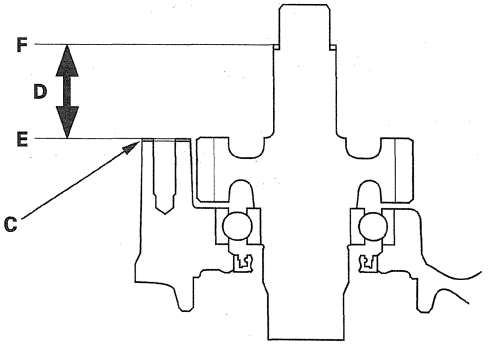

2. Install the new gasket (C) on the torque converter housing.

3. Measure the installed height (D) of the transfer output shaft between the surface (E) of the gasket and the top (F) of the 28.5 mm thrust shim in at least three places. Use the average as the actual height.

4. If the measurement is out of standard, remove the 28.5 mm thrust shim and measure its thickness.

5. Select and install a new thrust shim, then recheck the installation height.

THRUST SHIM, 28.5 mm

No.	Thickness
A	1.82 mm (0.0717 in)
B	1.84 mm (0.0724 in)
C	1.86 mm (0.0732 in)
D	1.88 mm (0.0740 in)
E	1.90 mm (0.0748 in)
F	1.92 mm (0.0756 in)
G	1.94 mm (0.0764 in)
H	1.96 mm (0.0772 in)
I	1.98 mm (0.0780 in)
J	2.00 mm (0.0787 in)
K	2.02 mm (0.0795 in)
L	2.04 mm (0.0803 in)
M	2.06 mm (0.0811 in)
N	2.08 mm (0.0819 in)
O	2.10 mm (0.0827 in)
P	2.12 mm (0.0835 in)
Q	2.14 mm (0.0843 in)
R	2.16 mm (0.0850 in)
S	2.18 mm (0.0858 in)
T	2.20 mm (0.0866 in)
U	2.22 mm (0.0874 in)
V	2.24 mm (0.0882 in)
W	2.26 mm (0.0890 in)
X	2.28 mm (0.0898 in)
Y	2.30 mm (0.0906 in)
Z	2.32 mm (0.0913 in)
AA	2.34 mm (0.0921 in)

Inspection

NOTE: To prevent damage to the transfer housing, always use soft jaws or equivalent materials between the transfer housing and a vise.

Transfer Gear Backlash Measurement

1. Set a dial indicator (A) on the transfer companion flange (B); position the dial indicator tip (C) on the top of the bolt (D).

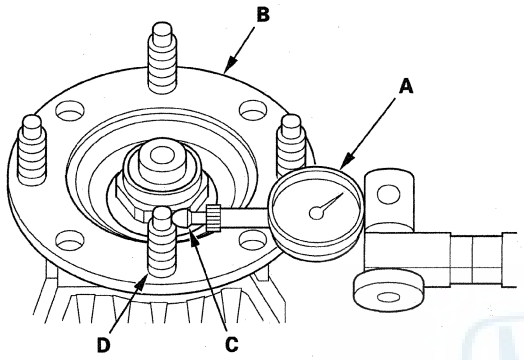

2. Measure transfer gear backlash.

   Standard: 0.06—0.16 mm (0.002—0.006 in)

Total Starting Torque Measurement

3. Secure the transfer housing (A) in a bench vise (B) with soft jaws. To prevent damaging the transfer housing, always use soft jaws or equivalent materials between the transfer housing and the vise.

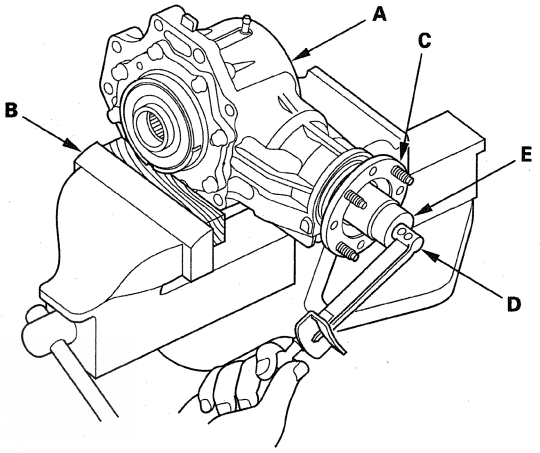

4. Rotate the transfer companion flange several times to seat the tapered roller bearings.

5. Measure the starting torque at the companion flange (C) using a torque wrench (D) and a socket (E).

   Standard: 2.64—4.23 N·m
   (26.9—43.1 kgf·cm, 23.3—37.4 lbf·in)

6. If the starting torque is out of standard, disassemble the transfer assembly and repair it.

Transfer Assembly

Disassembly

Exploded View

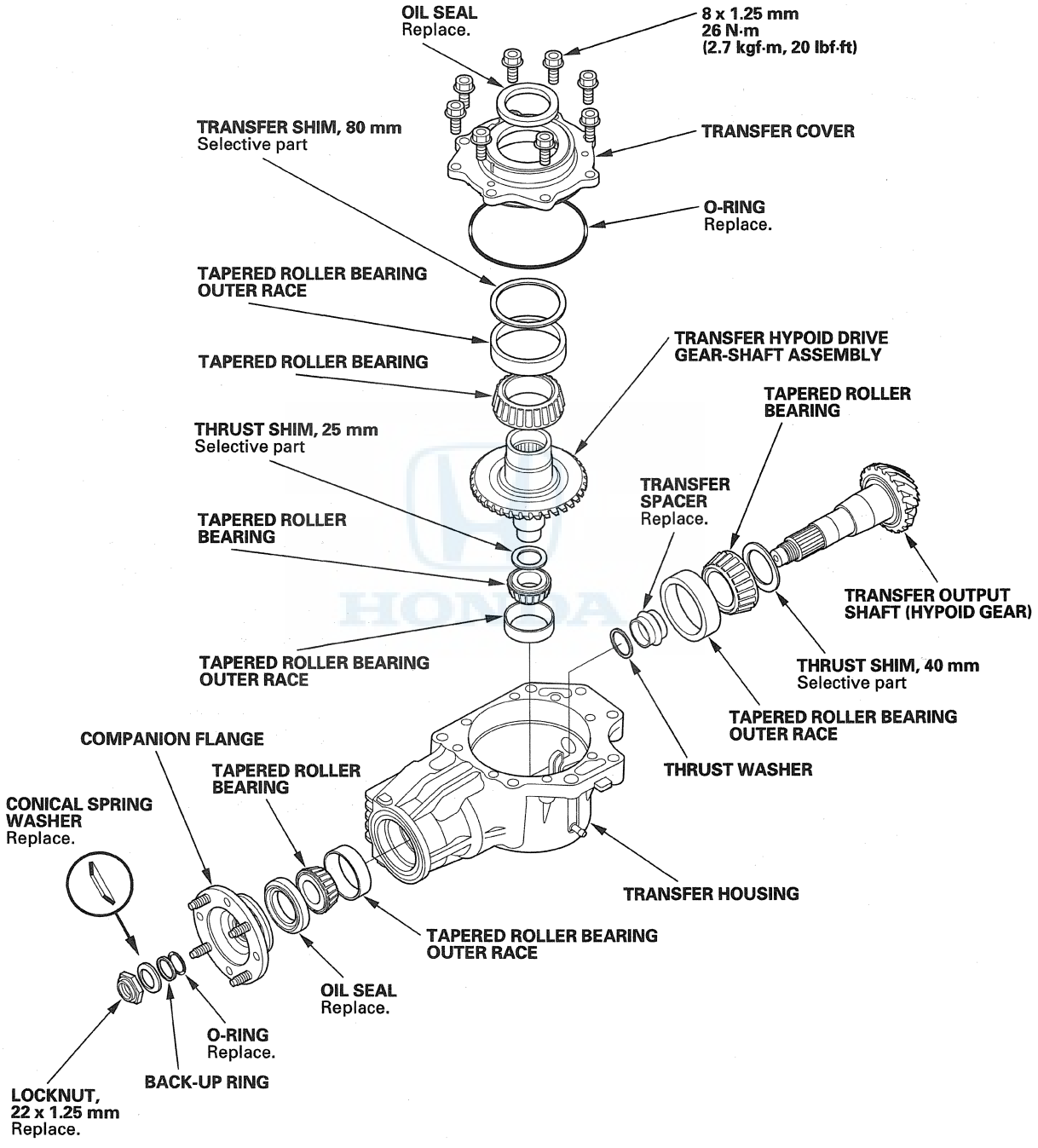

Special Tools Required
Companion flange holder 07XAB-0010101

1. Remove the transfer cover (A) from the transfer housing (B).

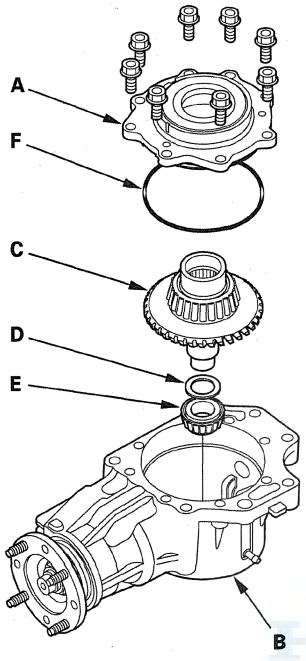

2. Remove the transfer hypoid drive gear/shaft assembly (C), 25 mm thrust shim (D), and tapered roller bearing (E).

3. Remove the O-ring (F) from the cover.

4. Drain the transfer fluid (hypoid gear oil) from the transfer housing.

5. Cut the lock tab on the locknut using a chisel.

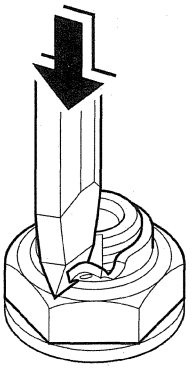

6. Secure the transfer housing in a bench vise with soft jaws. To prevent damage to the transfer housing, always use soft jaws or equivalent materials between the transfer housing and the vise.

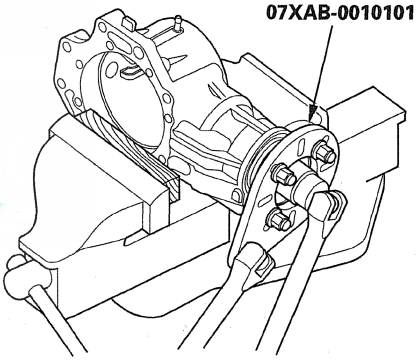

7. Install the companion flange holder on the companion flange, then loosen the locknut.

8. Remove the companion flange holder.

(cont'd)

Disassembly (cont'd)

9. Remove the locknut (A), conical spring washer (B), back-up ring (C), O-ring (D), and companion flange (E) from the transfer output shaft (hypoid gear) (F).

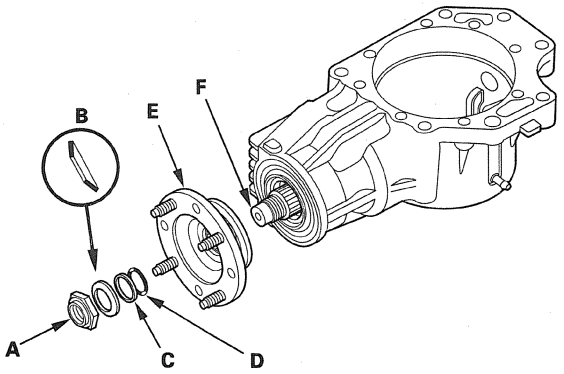

10. Remove the transfer output shaft (hypoid gear) (A) from the transfer housing (B), then remove the thrust washer (C) and transfer spacer (D) from the transfer output shaft (hypoid gear).

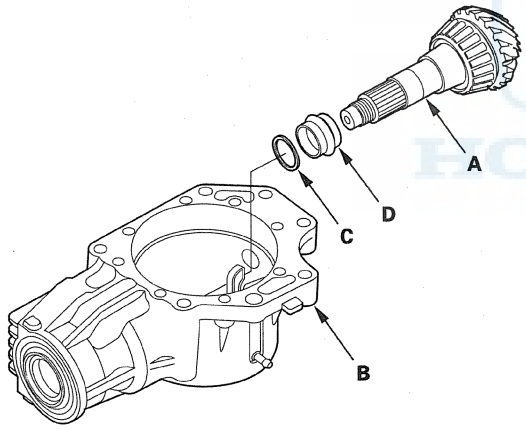

11. Remove the oil seal (A) and the tapered roller bearing (B) from the transfer housing.

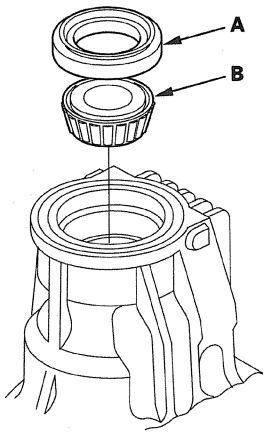

Transfer Hypoid Drive Gear Bearing Replacement

Special Tools Required
- Driver 07749-0010000
- Attachment, 42 x 47 mm 07746-0010300
- Attachment, 40 x 50 mm 07LAD-PW50601

1. Remove the tapered roller bearing (A) from the transfer hypoid drive gear (B) using the driver, the attachment (42 x 47 mm), bearing separator (C) and a press.

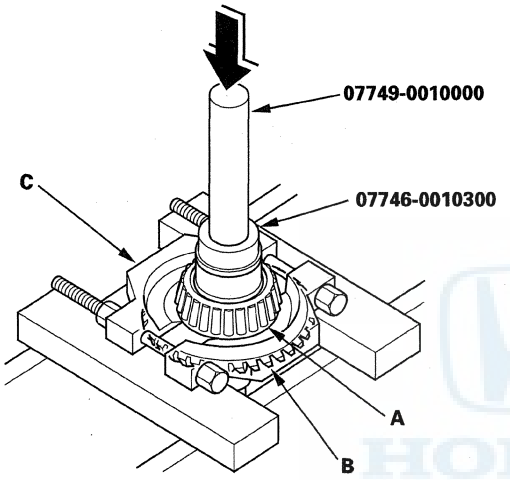

2. Install the new bearing on the transfer hypoid drive gear using the driver, the attachment (40 x 50 mm), and a press.

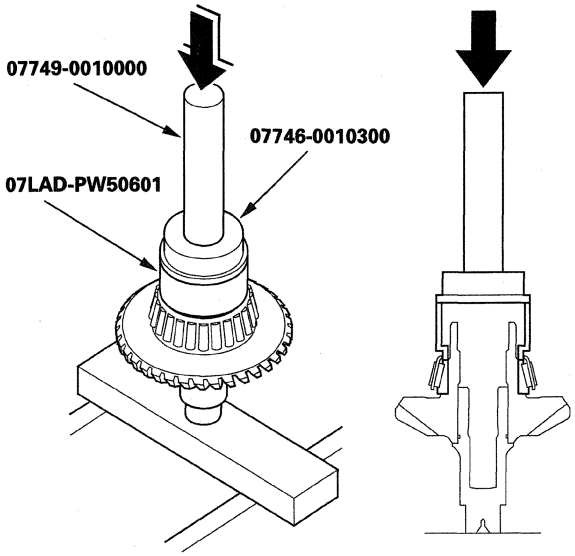

Transfer Output Shaft (Hypoid Gear) Bearing Removal/Installation

Special Tools Required
Driver, 40 mm I.D. 07746-0030100

1. Remove the tapered roller bearing (A) from the transfer output shaft (hypoid gear) (B) with a bearing separator (C) and a press. Place a shaft protector (D) between the transfer output shaft and a press to prevent damaging the shaft.

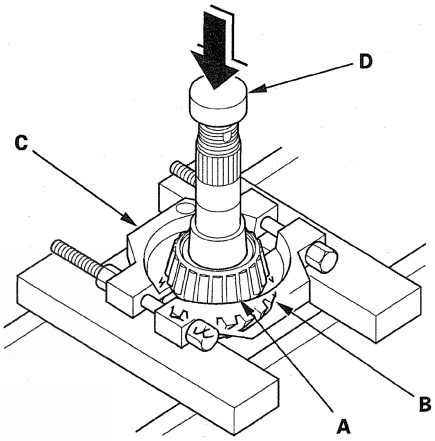

2. Install the 40 mm thrust shim (A) over the transfer output shaft (hypoid gear).

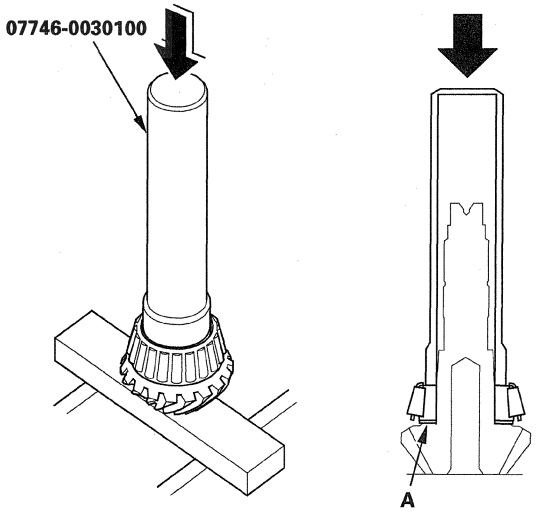

3. Install the tapered roller bearing over the transfer output shaft (hypoid gear) using the driver (40 mm I.D.) and a press.

Transfer Housing Tapered Roller Bearing Outer Race Replacement

Special Tools Required
- Driver 07749-0010000
- Attachment, 52 x 55 mm 07746-0010400
- Attachment, 65 mm 07JAD-SH30100
- Tapered bearing race installer A 07MAF-SP0011A
- Installer shaft 07MAF-SP0013A

NOTE: Replace the bearing with a new one whenever the outer race is replaced.

1. Remove the 52 mm bearing outer race (A), 75 mm outer race (B), and 65 mm outer race (C) from the transfer housing (D).

   NOTE: Some bearing outer races (52 mm, 65 mm, and 75 mm) are press-fitted in the housing and must be removed by heating the housing.

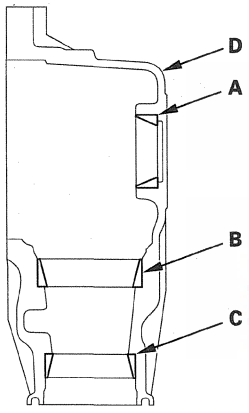

2. Remove the press-fitted bearing outer race (A) from the transfer housing (B) by heating the housing to about 212 °F (100 °C) with a heat gun (C). Do not heat the housing more than 212 °F (100 °C).

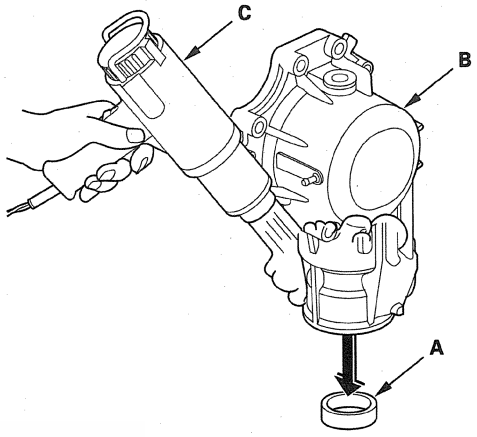

3. Install the 52 mm bearing outer race (A) until it bottoms in the transfer housing (B) using the driver and the attachment (52 x 55 mm).

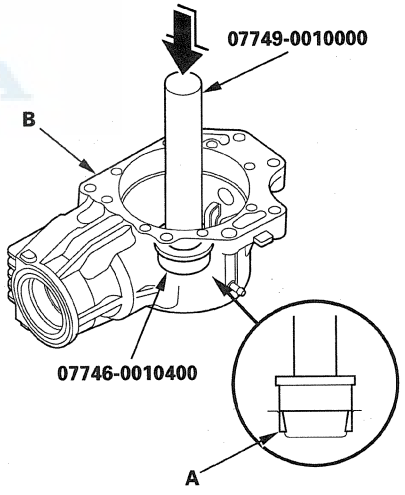

4. Install the 75 mm bearing outer race (A) and 65 mm bearing outer race (B) in the transfer housing (C), set the attachment (65 mm) and the tapered bearing race installer A over the races, and install the installer shaft through the attachment and installer.

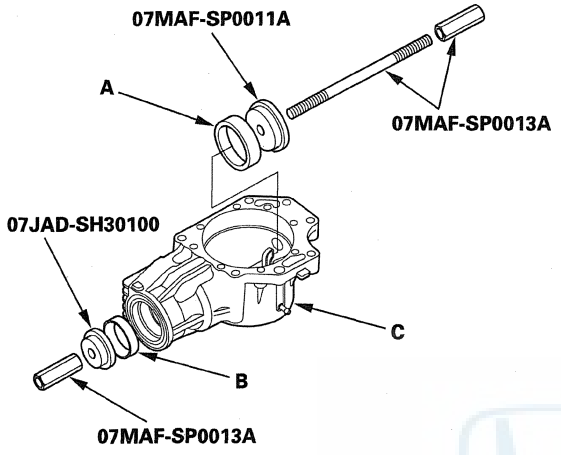

5. Tighten the installer shaft nut (A) to install the races (B) (C) into the transfer housing (D) securely.

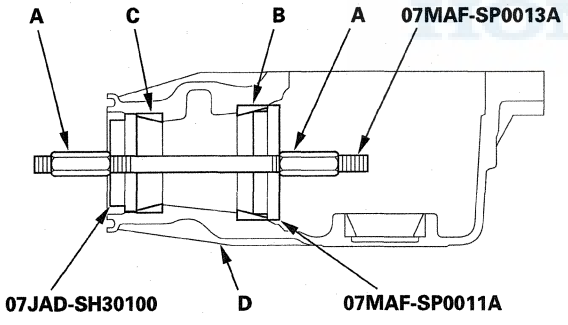

Transfer Cover Tapered Roller Bearing Outer Race Removal/ Installation

Special Tools Required
- Driver 07749-0010000
- Attachment, 78 x 80 mm 07NAD-PX40100

NOTE: Replace the bearing with a new one whenever the outer race is replaced.

1. Remove the bearing outer race (A) and 80 mm thrust shim (B) from the transfer cover (C). If the bearing outer race is press-fitted, remove the outer race by heating the cover to about 212 °F (100 °C) with a heat gun (D). Do not heat the cover more than 212 °F (100 °C).

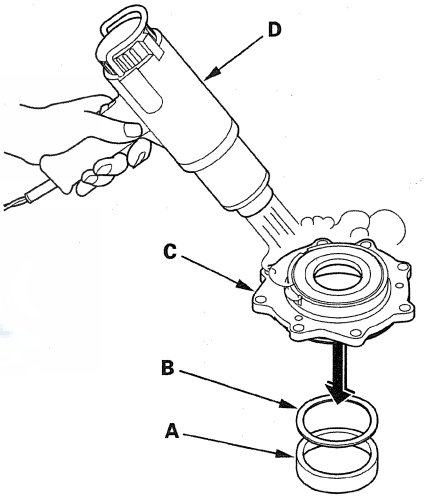

(cont'd)

Transfer Cover Tapered Roller Bearing Outer Race Removal/ Installation (cont'd)

2. Install the 80 mm thrust shim (A) and bearing outer race (B) in the transfer cover (C).

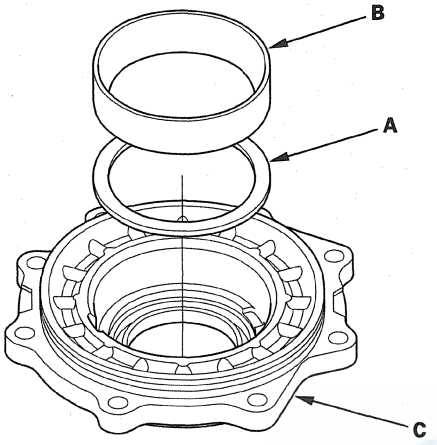

3. Drive the outer race securely in the cover using the driver and the attachment (78 x 80 mm) so there is no clearance between the outer race, thrust shim, and cover.

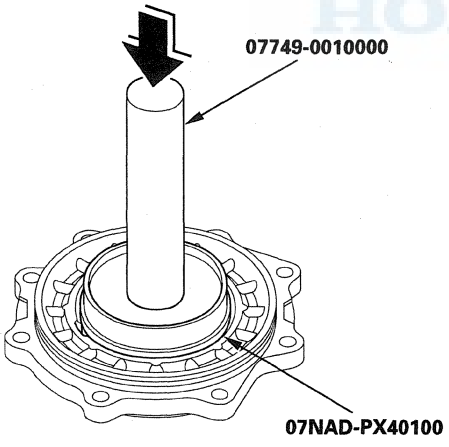

Transfer Cover Oil Seal Replacement

Special Tools Required
- Driver 07749-0010000
- Attachment, 65 mm 07JAD-SH30100

1. Remove the oil seal from the transfer cover.

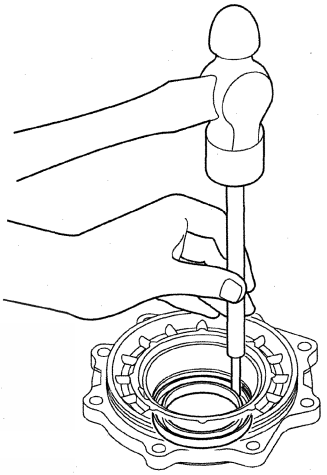

2. Install the new oil seal (A) in the transfer cover (B) to a height (C) of 0—1 mm (0—0.04 in) above the cover surface using the driver and the attachment (65 mm).

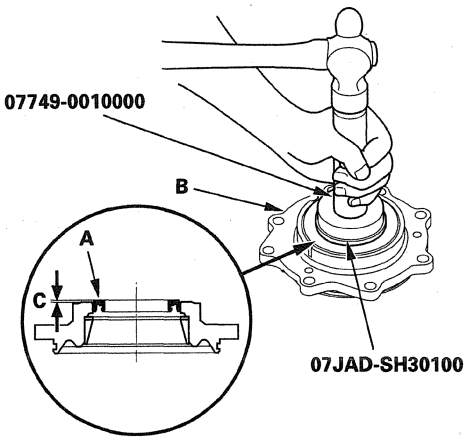

Reassembly

Special Tools Required
- Driver, 40 mm I.D. 07746-0030100
- Driver 07749-0010000
- Attachment, 65 mm 07JAD-SH30100
- Companion flange holder 07XAB-0010101
- Attachment, 78 x 80 mm 07NAD-PX40100

NOTE:
- While reassembling the transfer assembly:
  - Check and adjust the transfer gear tooth contact.
  - Measure and adjust the transfer gear backlash.
  - Check and adjust the tapered roller bearing starting torque.
- Coat all parts with transfer fluid (hypoid gear oil) during reassembly.
- Replace the tapered roller bearing and the bearing outer race as a set if either part is replaced.
- Replace the transfer hypoid drive gear and the transfer output shaft (hypoid gear) as a set if either part is replaced.

1. Select the 40 mm thrust shim if the transfer output shaft (hypoid gear) is replaced. Calculate the thickness of the 40 mm thrust shim using the following formula, and select the shim from the following table.

   FORMULA: A/100 − B/100 + C = X

   A: Number on the existing transfer output shaft (hypoid gear)
   B: Number on the replacement transfer output shaft (hypoid gear)
   C: Thickness of the existing 40 mm thrust shim
   X: Thickness needed for the replacement 40 mm thrust shim

   NOTE: The number on the transfer output shaft (hypoid gear) is shown in 1/100 mm.

EXAMPLE

A: Existing transfer output shaft (hypoid gear) Number = +2
B: Replacement transfer output shaft (hypoid gear) Number = −1
C: Existing 40 mm thrust shim thickness = 1.05 mm
X: Replacement 40 mm thrust shim thickness

X = A/100 − B/100 + C
= 2/100 − (−1)/100 + 1.05
= 0.02 + 0.01 + 1.05 = 1.08 (mm)

Select No. M 40 mm thrust shim of 1.08 mm (0.043 in)

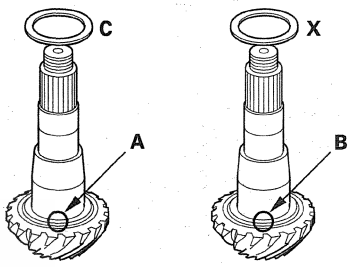

THRUST SHIM, 40 mm

Shim No.	Thickness
A	0.72 mm (0.028 in)
B	0.75 mm (0.030 in)
C	0.78 mm (0.031 in)
D	0.81 mm (0.032 in)
E	0.84 mm (0.033 in)
F	0.87 mm (0.034 in)
G	0.90 mm (0.035 in)
H	0.93 mm (0.037 in)
I	0.96 mm (0.038 in)
J	0.99 mm (0.039 in)
K	1.02 mm (0.040 in)
L	1.05 mm (0.041 in)
M	1.08 mm (0.043 in)
N	1.11 mm (0.044 in)
O	1.14 mm (0.045 in)

2. Select the 40 mm thrust shim if the tapered roller bearing on the transfer output shaft (hypoid gear) is replaced. Measure the thickness of the replacement bearing and the existing bearing, and calculate the difference of the bearing thickness. Adjust the thickness of the existing 40 mm thrust shim by the amount of difference in bearing thickness, and select the replacement 40 mm thrust shim.

(cont'd)

Reassembly (cont'd)

3. Install the 40 mm thrust shim (A) on the transfer output shaft (hypoid gear) (B), then install the tapered roller bearing (C) using the driver (40 mm I.D.) and a press.

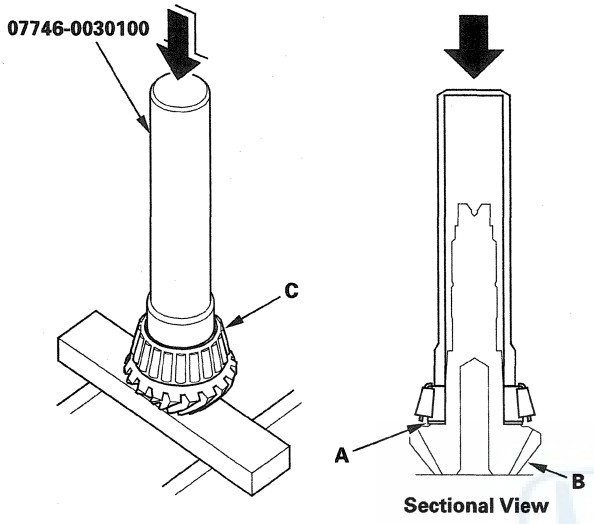

4. Place the tapered roller bearing (A) on the bearing outer race of the companion flange side of the transfer housing, and install the new oil seal (B).

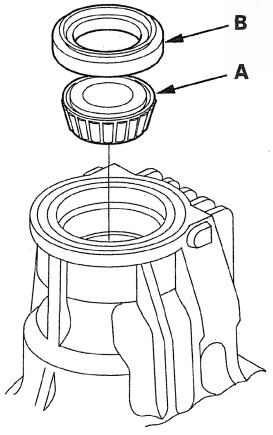

5. Drive the oil seal securely in the transfer housing using the driver and the attachment (65 mm).

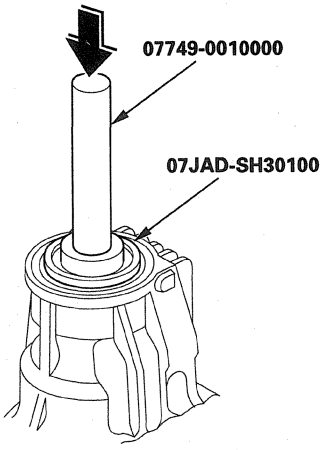

6. Install the transfer output shaft (hypoid gear) (A) in the transfer housing (B). Do not install the transfer spacer and thrust washer on the transfer output shaft (hypoid gear).

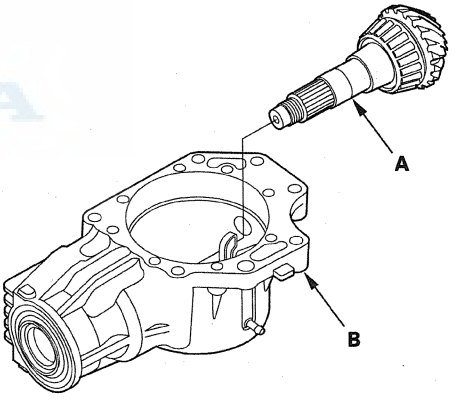

7. Install the companion flange (A), conical spring washer (B) (in the direction shown), and locknut (C) on the transfer output shaft (hypoid gear) (D). Do not install the O-ring and back-up ring.

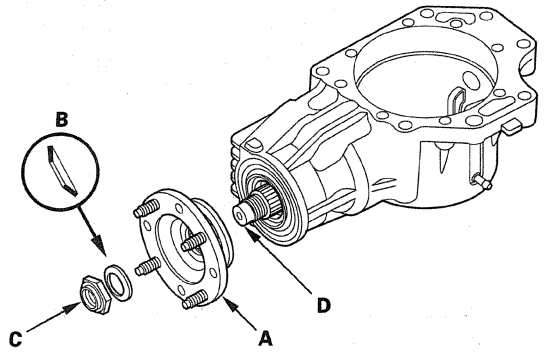

8. Secure the transfer housing (A) in a bench vise (B) with soft jaws. To prevent damage to the transfer housing, always use soft jaws or equivalent materials between the transfer housing and the vise.

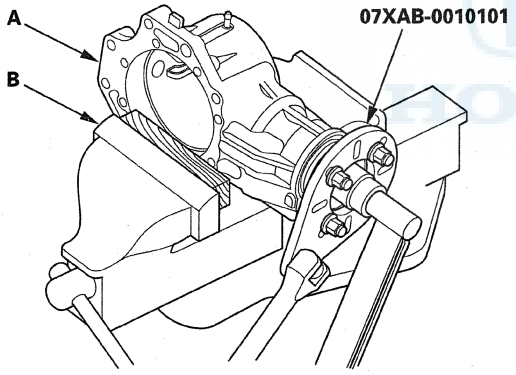

9. Install the companion flange holder on the companion flange.

10. Tighten the locknut while measuring the starting torque of the transfer output shaft (hypoid gear) so the starting torque is within 1.15—1.71 N·m (11.7—17.4 kgf·cm, 10.2—15.1 lbf·in). Do not stake the locknut in this step.

11. Remove the companion flange holder.

12. Apply Prussian Blue to both sides of the transfer hypoid drive gear teeth lightly and evenly.

13. Install the tapered roller bearing (A), 25 mm thrust shim (B), and transfer drive gear-shaft assembly (C) in the transfer housing (D).

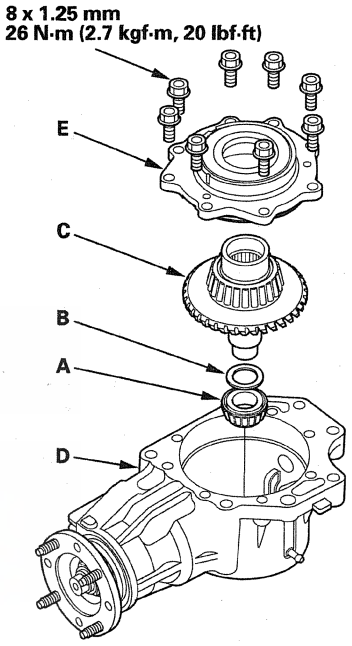

14. Install the transfer cover (E), and secure it with the bolts. Do not install the O-ring on the transfer cover.

15. Rotate the companion flange in both directions until the transfer gears rotate one full turn in both directions.

(cont'd)

Reassembly (cont'd)

16. Set a dial indicator (A) on the transfer companion flange (B); position the dial indicator tip (C) on the top of the bolt (D).

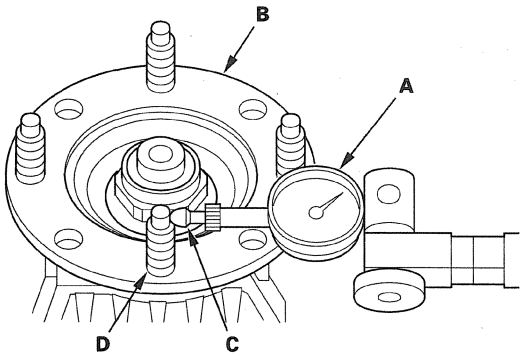

17. Measure transfer gear backlash.

    Standard: 0.06—0.16 mm (0.002—0.006 in)

18. Remove the transfer cover and the transfer hypoid drive gear/shaft assembly, and check the transfer hypoid drive gear tooth contact pattern.

CORRECT TOOTH CONTACT PATTERN

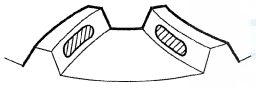

INCORRECT TOOTH CONTACT PATTERN

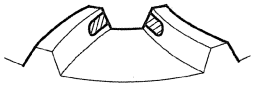

TOE CONTACT

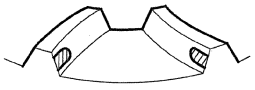

HEEL CONTACT

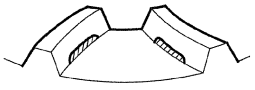

FLANK CONTACT

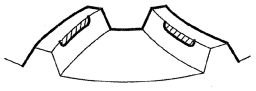

FACE CONTACT

19. If the backlash measurement is out of the standard, adjust the backlash with the 40 mm thrust shim and recheck. Do not use more than two 40 mm thrust shims to adjust the backlash.

20. If the transfer gear tooth contact is incorrect, adjust the tooth contact with the 25 mm, 40 mm, or 80 mm thrust shim. Do not use more than two shims of each thrust shim to adjust the tooth contact.

- Toe Contact
  Use a thinner 40 mm thrust shim to move the transfer output shaft (hypoid gear) away from the transfer hypoid drive gear. Because this movement causes the transfer gear backlash to change, move the transfer hypoid drive gear toward the transfer output shaft (hypoid gear) to adjust the transfer gear backlash as follows:
  – Reduce the thickness of the 25 mm thrust shim.
  – Increase the thickness of the 80 mm thrust shim by amount the 25 mm thrust shim was reduced.
- Heel Contact
  Use a thicker 40 mm thrust shim to move the transfer output shaft (hypoid gear) toward the transfer hypoid drive gear. Because this movement causes the transfer backlash to change, move the transfer hypoid drive gear away from the transfer output shaft (hypoid gear) to adjust the transfer gear backlash as follows:
  – Increase the thickness of the 25 mm thrust shim.
  – Reduce the thickness of the 80 mm thrust shim by the amount the 25 mm thrust shim was reduced.
- Flank Contact
  Use a thicker 25 mm thrust shim to move the transfer hypoid drive gear away from the transfer output shaft (hypoid gear).
  Flank contact must be adjusted within the limits of the transfer gear backlash. If the backlash exceeds the limits, adjust as described under Heel Contact.
- Face Contact
  Use a thinner 25 mm thrust shim to move the transfer hypoid drive gear toward the transfer output shaft (hypoid gear).
  Face contact must be adjusted within the limits of the transfer gear backlash. If the backlash exceeds the limits, adjust as described under Toe Contact.

THRUST SHIM, 25 mm

Shim No.	Part Number	Thickness
1.70	29411-P1C-000	1.70 mm (0.067 in)
1.73	29412-P1C-000	1.73 mm (0.068 in)
1.76	29413-P1C-000	1.76 mm (0.069 in)
1.79	29414-P1C-000	1.79 mm (0.070 in)
1.82	29415-P1C-000	1.82 mm (0.072 in)
1.85	29416-P1C-000	1.85 mm (0.073 in)
1.88	29417-P1C-000	1.88 mm (0.074 in)
1.91	29418-P1C-000	1.91 mm (0.075 in)
1.94	29419-P1C-000	1.94 mm (0.076 in)
1.97	29420-P1C-000	1.97 mm (0.078 in)
2.00	29421-P1C-000	2.00 mm (0.079 in)
2.03	29422-P1C-000	2.03 mm (0.080 in)
2.06	29423-P1C-000	2.06 mm (0.081 in)
2.09	29424-P1C-000	2.09 mm (0.082 in)
2.12	29425-P1C-000	2.12 mm (0.083 in)
2.15	29426-P1C-000	2.15 mm (0.085 in)
2.18	29427-P1C-000	2.18 mm (0.086 in)
2.21	29428-P1C-000	2.21 mm (0.087 in)
2.24	29429-P1C-000	2.24 mm (0.088 in)

21. Remove the transfer cover (A), transfer hypoid drive gear/shaft assembly (B), 25 mm thrust shim (C), and tapered roller bearing (D) from the transfer housing (E) after adjusting the transfer gear backlash or transfer gear tooth contact.

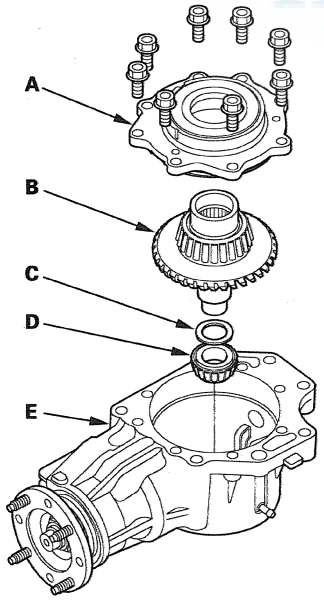

22. Secure the transfer housing (A) in a bench vise (B) with soft jaws. To prevent damage to the transfer housing, always use soft jaws or equivalent materials between the transfer housing and the vise.

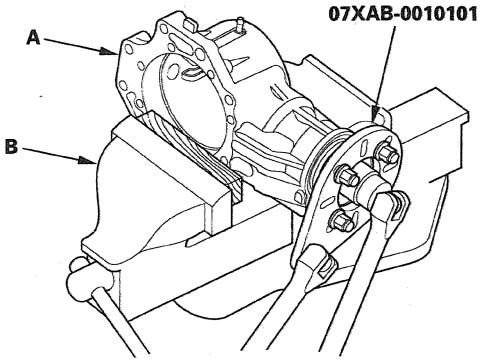

23. Install the companion flange holder on the companion flange, then loosen the locknut.

24. Remove the companion flange holder.

25. Remove the locknut (A), conical spring washer (B), and companion flange (C) from the transfer output shaft (hypoid gear) (D).

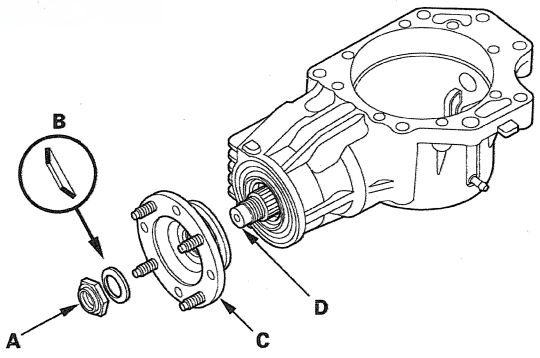

26. Remove the transfer output shaft (hypoid gear) from the transfer housing.

(cont'd)

Reassembly (cont'd)

27. Install the thrust washer (A) and the new transfer spacer (B) on the transfer output shaft (hypoid gear) (C), and install them in the transfer housing (D).

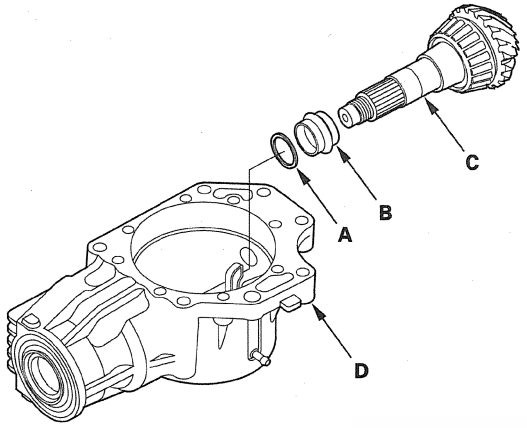

28. Coat the threads of the locknut and transfer output shaft (hypoid gear) with transfer fluid (hypoid gear oil).

29. Install the companion flange (A). Coat a new O-ring (B) with transfer fluid (hypoid gear oil), then install the O-ring, back-up ring (C), new conical spring washer (D), and new locknut (E) on the transfer output shaft (hypoid gear) (F). Install the conical spring washer in the direction shown.

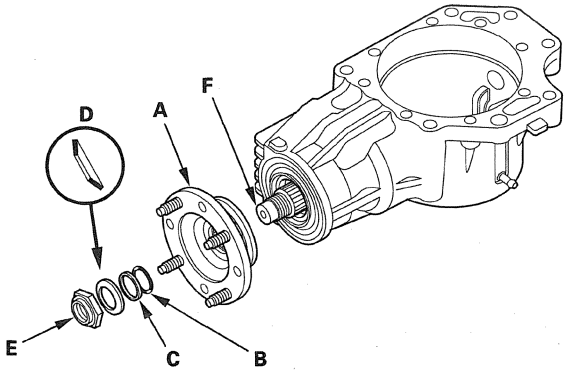

30. Secure the transfer housing (A) in a bench vise (B) with soft jaws. To prevent damage to the transfer housing, always use soft jaws or equivalent materials between the transfer housing and the vise.

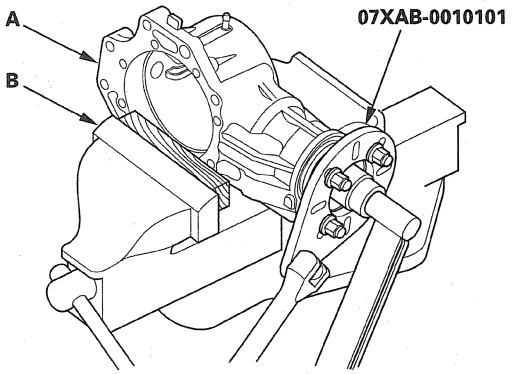

31. Install the companion flange holder on the companion flange.

32. Tighten the locknut while measuring the starting torque of the transfer output shaft (hypoid gear) so the starting torque is within 1.15—1.71 N·m (11.7—17.4 kgf·cm, 10.2—15.1 lbf·in).

Tightening Torque:
108—294 N·m
(11.0—30.0 kgf·m, 79.6—217 lbf·ft)
Starting Torque:
1.15—1.71 N·m
(11.7—17.4 kgf·cm, 10.2—15.1 lbf·in)

NOTE:
- Rotate the companion flange several times to seat the tapered roller bearings, then measure the starting torque.
- If the starting torque exceeds 1.71 N·m (17.4 kgf·cm, 15.1 lbf·in), replace the transfer spacer and reassemble the parts. Do not adjust the torque with the locknut loose.
- If the tightening torque exceeds 294 N·m (30.0 kgf·m, 217 lbf·ft), replace the transfer spacer and reassemble the parts.

33. Remove the companion flange holder.

34. Stake the locknut to a depth (A) of 0.7—1.2 mm (0.03—0.05 in) using a 3.5 mm punch (B).

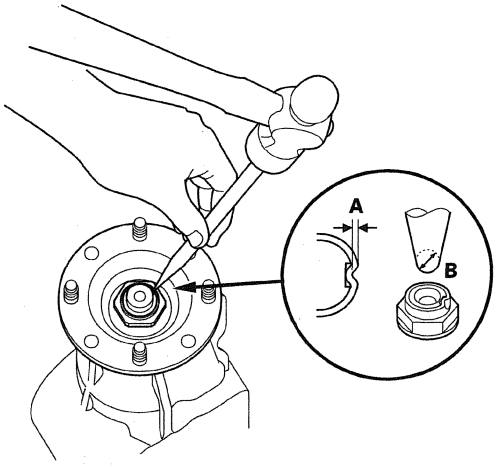

35. Install the tapered roller bearing (A), 25 mm thrust shim (B), and transfer hypoid drive gear/shaft assembly (C) in the transfer housing (D).

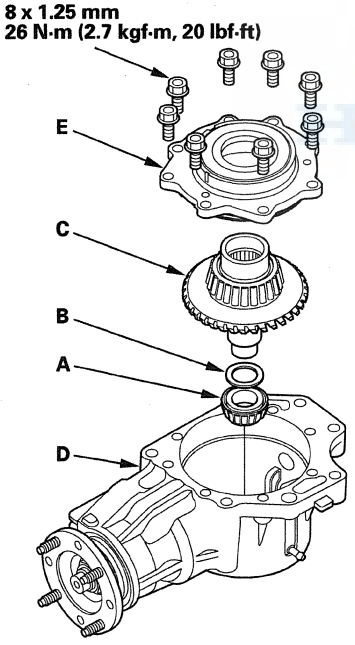

36. Temporally install the transfer cover (E) without the O-ring. Install and tighten the bolts.

37. Secure the transfer housing (A) in a bench vise (B) with soft jaws. To prevent damage to the transfer housing, always use soft jaws or equivalent materials between the transfer housing and the vise.

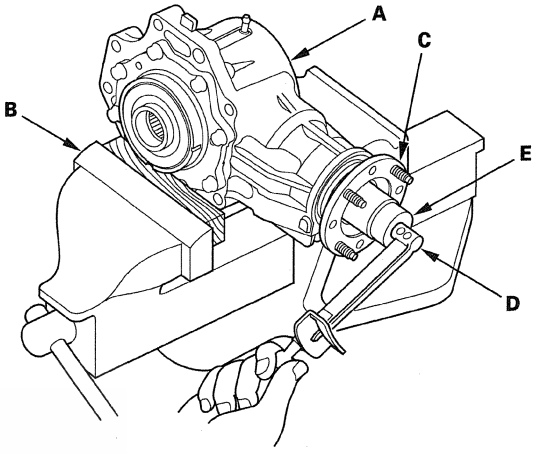

38. Rotate transfer companion flange (C) several times to seat the tapered roller bearings.

39. Measure the starting torque at the companion flange using a torque wrench (D) and a socket (E).

Total Starting Torque:
2.64—4.23 N·m
(26.9—43.1 kgf·cm, 23.3—37.4 lbf·in)

40. Remove the transfer cover from the transfer housing.

41. If the starting torque is within the standard, go to step 47.

(cont'd)

Reassembly (cont'd)

42. If the starting torque is out of standard, remove the bearing outer race (A) and the 80 mm thrust shim (B) from the transfer cover (C). If the bearing outer race is press-fitted, remove the bearing outer race by heating the cover to about 212 °F (100 °C) with a heat gun (D). Do not heat the cover more than 212 °F (100 °C).

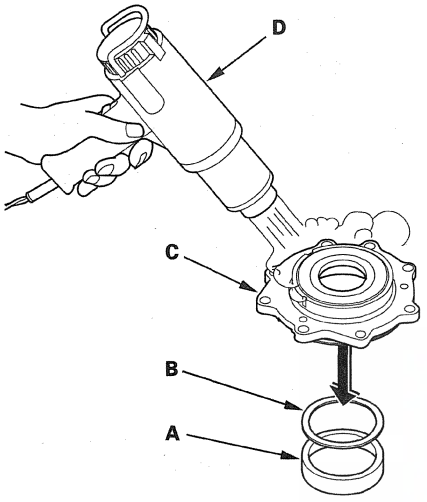

43. Measure thickness of the removed 80 mm thrust shim, and select the new 80 mm shim.

THRUST SHIM, 80 mm

Shim No.	Thickness
A	1.52 mm (0.060 in)
B	1.55 mm (0.061 in)
C	1.58 mm (0.062 in)
D	1.61 mm (0.063 in)
E	1.64 mm (0.065 in)
F	1.67 mm (0.066 in)
G	1.70 mm (0.067 in)
H	1.73 mm (0.068 in)
I	1.76 mm (0.069 in)
J	1.79 mm (0.070 in)
K	1.82 mm (0.072 in)
L	1.85 mm (0.073 in)
M	1.88 mm (0.074 in)
N	1.91 mm (0.075 in)
O	1.94 mm (0.076 in)
P	1.97 mm (0.078 in)
Q	2.00 mm (0.079 in)
R	2.03 mm (0.080 in)
S	2.06 mm (0.081 in)
T	2.09 mm (0.082 in)
U	2.12 mm (0.083 in)
V	2.15 mm (0.085 in)
W	2.18 mm (0.086 in)
X	2.21 mm (0.087 in)
Y	2.24 mm (0.088 in)
Z	2.27 mm (0.089 in)
AA	2.30 mm (0.091 in)
AB	2.33 mm (0.092 in)
AC	2.36 mm (0.093 in)
AD	2.39 mm (0.094 in)
AE	2.42 mm (0.095 in)
AF	2.45 mm (0.096 in)
AG	2.48 mm (0.098 in)
AH	2.51 mm (0.099 in)
AI	2.54 mm (0.100 in)
AJ	2.57 mm (0.101 in)
AK	2.60 mm (0.102 in)
AL	2.63 mm (0.104 in)
AM	2.66 mm (0.105 in)

44. Install the 80 mm trust shim (A) and the bearing outer race (B) in the transfer cover (C). If you heated the cover, let it cool to room temperature before installing the thrust shim.

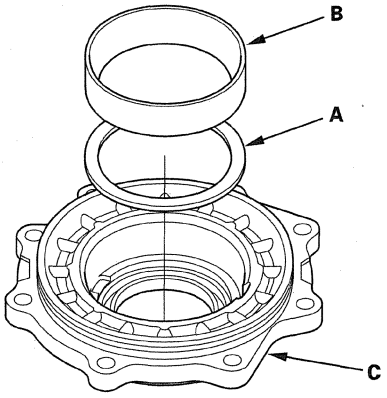

45. Drive the outer race securely in the cover using the driver and the attachment (78 x 80 mm) so there is no clearance between the outer race, thrust shim, and cover.

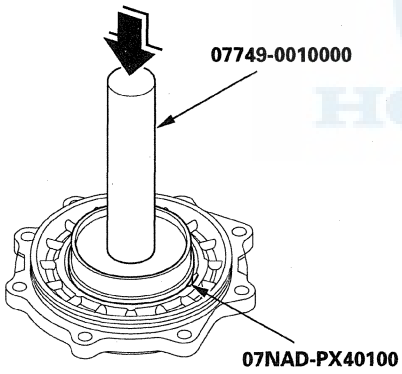

46. After replacing the 80 mm thrust shim, recheck and make sure that the total starting torque is within the specification.

47. Install the new O-ring (A) on the transfer cover (B), then install the cover on the transfer housing (C).

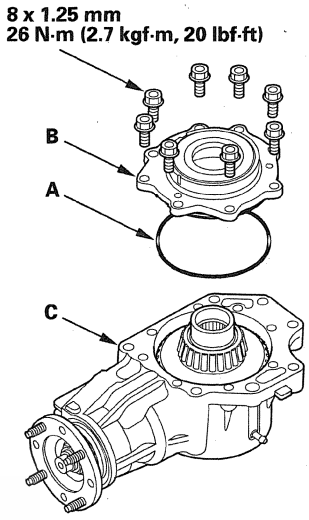

48. Remove the filler plug (A), then refill the transfer assembly with transfer fluid (hypoid gear oil). Use an SAE 90 or SAE 80W-90 viscosity hypoid gear oil, API classified GL4 or GL5 only.

Viscosity:
SAE 90: Above 0 °F (−18 °C)

Hypoid Gear Oil Capacity: 0.45 L (0.48 US qt)

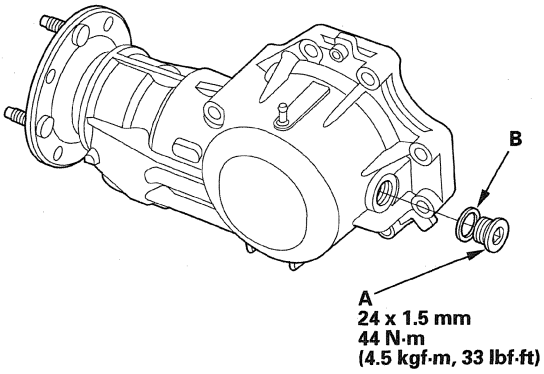

49. Install the filler plug with a new sealing washer (B).

Rear Differential

Rear Differential

Special Tools 15-2
Component Location Index 15-3
General Troubleshooting Information 15-4
SH-AWD Differential Clutch Torque Memorization ... 15-7
Yaw Rate-Lateral/Longitudinal Acceleration Neutral Position Memorization 15-7
SH-AWD Control Unit Initialization 15-8
DTC Troubleshooting Index 15-9
Symptom Troubleshooting Index 15-11
System Description 15-12
Circuit Diagram 15-30
DTC Troubleshooting 15-32
Symptom Troubleshooting 15-92
SH-AWD Function Test 15-93
Rear Differential Fluid Inspection and Replacement 15-96
Rear Differential Fluid Temperature Sensor Replacement 15-98
Hypoid Gear Speed Sensor Replacement 15-98
SH-AWD Control Unit Replacement 15-99
SH-AWD Relay Replacement 15-99
Rear Differential Mount Replacement 15-100
Rear Differential Removal 15-101
Rear Differential Installation 15-102
Rear Differential Disassembly/Reassembly 15-104
Front Case Oil Seal Replacement 15-105
Center Case Front Oil Seal Replacement 15-108
Side Case Oil Seal Replacement 15-114
Center Case Side Oil Seal Replacement 15-115
Center Case Replacement 15-119
Side Case Replacement 15-120

Special Tools

Ref. No.	Tool Number	Description	Qty
①	07GAD-SD40101	Bearing Driver Attachment, 78 x 90 mm	1
②	07MAJ-PY4011A	Oil Pressure Hose	1
③	07MAJ-PY40120	Oil Pressure Hose Adapter	1
④	07SAZ-001000A	Backprobe Set	2
⑤	07XAB-0010101	Companion Flange Holder	1
⑥	070AD-PYZA100	Driver, 56 x 62 mm	1
⑦	070AD-RJC0110	Oil Seal Driver A	1
⑧	070AD-RJC0120	Oil Seal Driver B	1
⑨	070AD-RJC0130	Oil Seal Driver C	1
⑩	070AD-RJC0140	Oil Seal Driver D	1
⑪	070AD-RJC0150	Oil Seal Driver E	1
⑫	070AJ-SJAA101	Adapter, Torque Wrench	1
⑬	07406-0070100	Oil Pressure Gauge	1
⑭	07746-0030100	Inner Driver Handle, 40 mm	1
⑮	07749-0010000	Driver Handle 15 x 135L	1

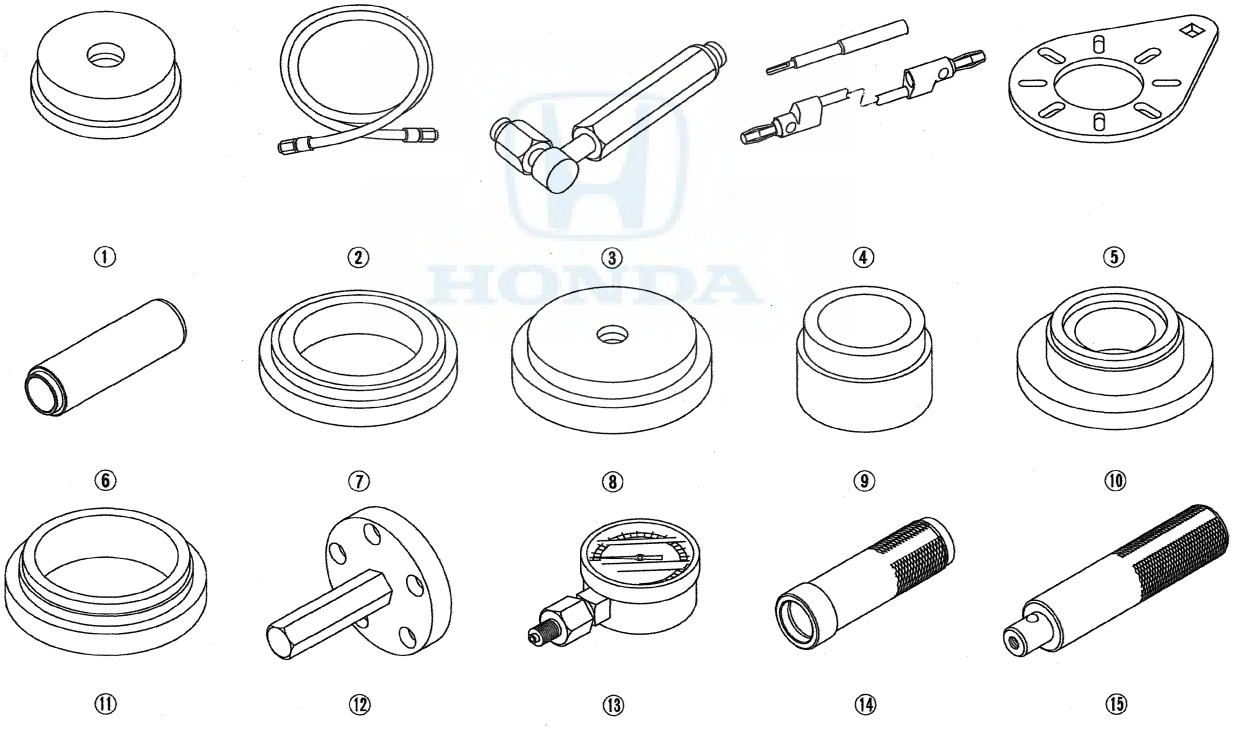

Component Location Index

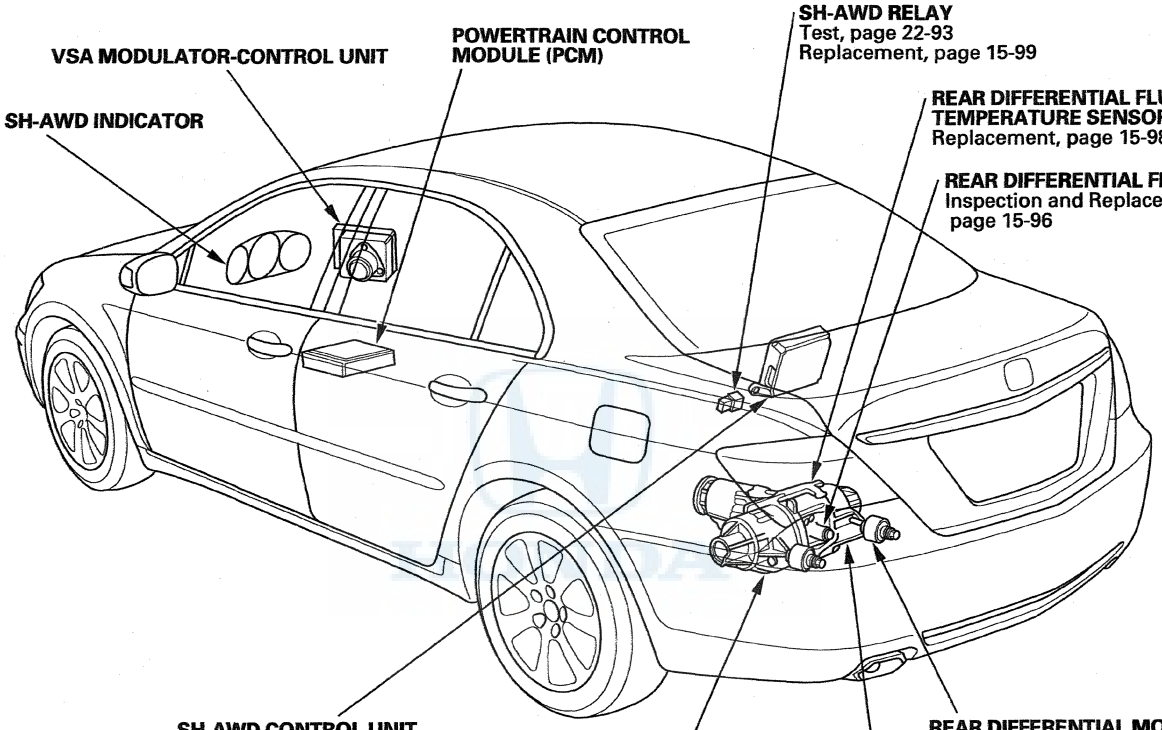

General Troubleshooting Information

SH-AWD Indicator

The SH-AWD indicator will come on under certain conditions even if the AWD system is working normally. Here are some examples:

- When you use high-powered wireless equipment such as a CB or Ham radio in the vehicle.
- When you keep spinning the rear wheels while the vehicle is stuck in sand, mud, snow, etc.
- When the battery voltage suddenly drops below 8 volts or rises above 16 volts.

After the SH-AWD indicator comes on, it stays on until you turn the ignition switch to LOCK (0).

Diagnostic Trouble Code (DTC)

- The SH-AWD control unit can memorize up to seven different DTCs. The system displays the DTCs by blinking the SH-AWD indicator. Multiple DTCs are displayed in the order they occurred, beginning with the most recent.
- If the same DTC is detected more than once, the most recent DTC is written over the earlier one. Therefore, when the same problem is detected more than once, it is memorized as a single DTC.
- The DTCs are memorized in the SH-AWD unit EEPROM (non-volatile memory). Therefore, the memorized DTCs are not cleared when the battery is disconnected or the SH-AWD control unit is disconnected.
- If there is a problem in the central processing unit (CPU) of the SH-AWD control unit, the SH-AWD indicator comes on, but no DTC is memorized. Refer to the symptom troubleshooting.

Self-diagnosis

When a problem is detected during self-diagnosis, the system does the following:

- Turns the SH-AWD indicator on.
- Memorizes the DTC if possible.
- Stops AWD control and puts the vehicle back into two-wheel drive (front wheel only).
- Reduces engine torque to suit the driving conditions when an abnormality was detected (The client may notice a decrease in engine performance).

How to Use the HDS (Honda Diagnostic System)

1. With the ignition switch in LOCK (0), connect the HDS to the data link connector (DLC) (A) located under the driver's side of the dashboard.

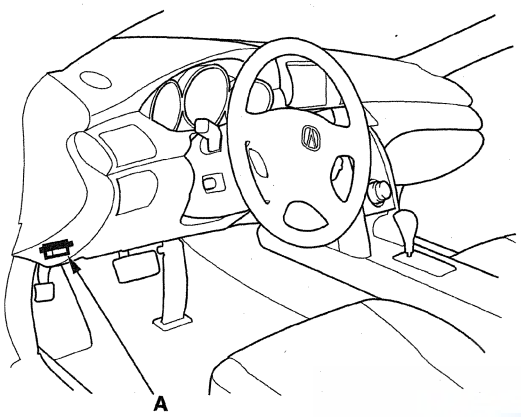

2. Turn the ignition switch to ON (II).
3. Make sure the HDS communicates with the vehicle and the SH-AWD control unit. If it does not, go to the DLC circuit troubleshooting (see page 11-211).
4. Check the diagnostic trouble code (DTC) and the freeze data, for all systems in the vehicle, troubleshoot the powertrain DTCs first and note them. Then refer to the indicated DTC's troubleshooting, and do the appropriate troubleshooting procedure.

   NOTE:
   - The HDS can read the DTC, the freeze data, the current data, and other system data.
   - For specific operations, refer to the Help menu that came with the HDS.
   - It is best do an ALL DTC CHECK to look for other systems DTCs that are related to the problem.

How to Clear DTCs

1. With the ignition switch in LOCK (0), connect the HDS to the data link connector (DLC) (A) located under the driver's side of the dashboard.

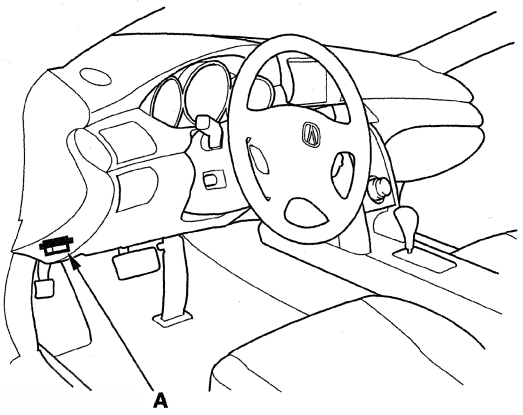

2. Turn the ignition switch to ON (II).
3. Make sure the HDS communicates with the vehicle and the SH-AWD control unit. If it does not, go to the DLC circuit troubleshooting (see page 11-211).
4. Clear the DTC(s) by following the screen prompts on the HDS.
5. Turn the ignition switch to LOCK (0).

   NOTE: If the DTC that was cleared is related to another system, that system's DTC must be repaired, or the SH-AWD DTC will return.

(cont'd)

General Troubleshooting Information (cont'd)

How to Check for Diagnostic Trouble Codes (DTCs)

When the SH-AWD control unit senses an abnormality in the input or output systems, the SH-AWD indicator in the gauge control module will usually come on, and the malfunction indicator lamp (MIL), the D indicator, the VSA indicator, and/or the ABS indicator may also come on.

NOTE: Check the vehicle battery condition and charging system before troubleshooting.

1. With the ignition switch to LOCK (0), connect the HDS to the data link connector (DLC) (A) located under the driver's side of the dashboard.

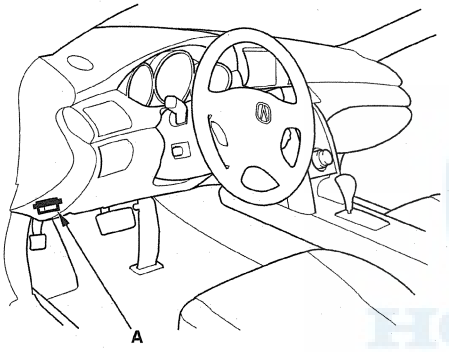

2. Turn the ignition switch to ON (II), then make sure the HDS communicates with vehicle and the SH-AWD control unit. If it does not, go to the DLC circuit troubleshooting (see page 11-211). Follow the prompts on the HDS to display the DTC(s) on the screen. Check the DTC and freeze data for all systems. After determining the DTC(s), refer to the DTC Troubleshooting.

   NOTE: See the HDS Help menu for specific instructions.

3. If there are fuel and emission DTCs, A/T DTCs, and VSA system DTC's at the same time, troubleshoot the fuel and emission DTCs first, otherwise the SH-AWD DTC may return.

4. After recording the DTCs, clear all DTCs.

5. Test-drive the vehicle for several minutes in AWD mode, and check for DTCs. If the DTC returns, refer to the DTC Troubleshooting. If the DTC does not return, there was an intermittent problem within the circuit. Make sure all connectors and terminals in the circuit are tight.

How to Troubleshoot Circuits at the SH-AWD Control Unit

Special Tools Required
Backprobe set 07SAZ-001000A (two required)

1. Remove the rear seat (see page 20-140).

2. Remove the trunk front trim panel (see page 20-83).

3. Inspect the circuit on the SH-AWD control unit according to the DTC Troubleshooting using the backprobe set and a digital multimeter or an analog circuit tester.

4. Connect the backprobe adapters (A) to the stacking patch cords (B), and connect the cords to a digital multimeter or an analog circuit tester (C). Using the wire insulator as a guide for the contoured-tip of the backprobe adapter, gently slide the tip into the connector from the wire side until it comes in contact with the terminal end of the wires.

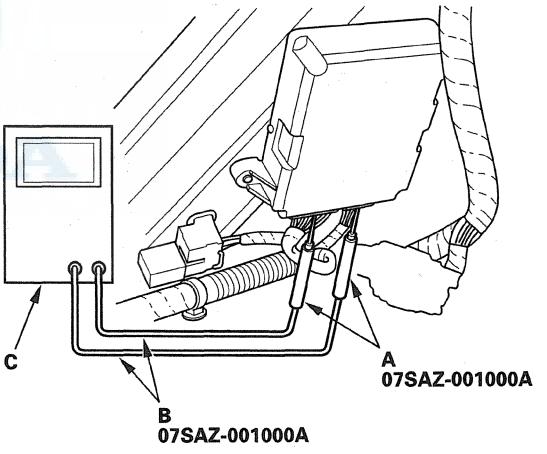

SH-AWD Differential Clutch Torque Memorization

Whenever the side clutch set is replaced, the differential clutch torque memorization must be done.

1. With the ignition switch in LOCK (0), connect the HDS to the DLC (A) located under the driver's side of the dashboard.

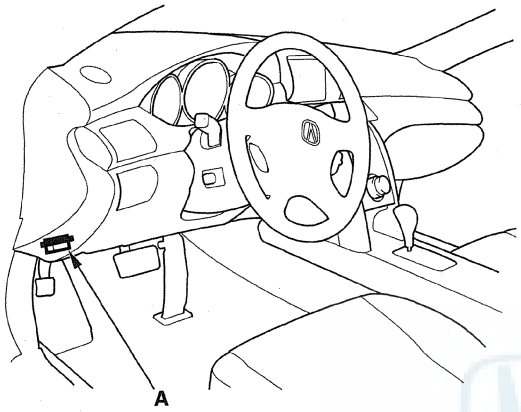

2. Turn the ignition switch to ON (II).
3. Make sure the HDS communicates with vehicle and the SH-AWD control unit. If it does not, go to the DLC circuit troubleshooting (see page 11-211).
4. From the mode menu, select MISCELLANEOUS TEST, then select NEUTRAL MENU with the HDS and follow the screen prompts.

   NOTE: See the HDS Help menu for specific instructions.

Yaw Rate-Lateral/Longitudinal Acceleration Neutral Position Memorization

Whenever the yaw rate-lateral/longitudinal acceleration sensor is replaced, its neutral position be memorization must be done.

1. With the ignition switch in LOCK (0), connect the HDS to the DLC (A) located under the driver's side of the dashboard.

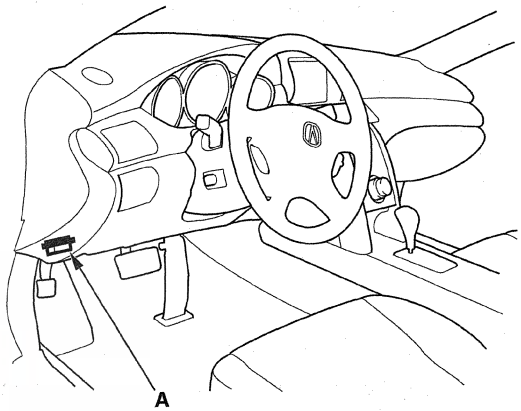

2. Turn the ignition switch to ON (II).
3. Make sure the HDS communicates with vehicle and the SH-AWD control unit. If it does not, go to the DLC circuit troubleshooting (see page 11-211).
4. From the mode menu, select MISCELLANEOUS TEST, then select NEUTRAL MENU with the HDS and follow the screen prompts.

   NOTE: See the HDS Help menu for specific instructions.

SH-AWD Control Unit Initialization

Whenever the SH-AWD control unit is replaced, it must be initialized.

1. With the ignition switch in LOCK (0), connect the HDS to the DLC (A) located under the driver's side of the dashboard.

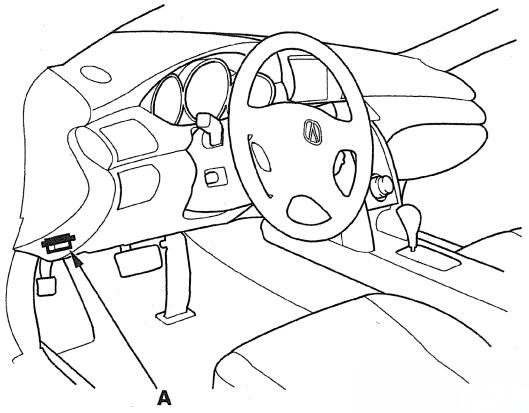

2. Turn the ignition switch to ON (II).
3. Make sure the HDS communicates with vehicle and the SH-AWD control unit. If it does not, go to the DLC circuit troubleshooting (see page 11-211).
4. From the mode menu, select MISCELLANEOUS TEST, then select INITIALIZATION with the HDS and follow the screen prompts.

   NOTE: See the HDS Help menu for specific instructions.

DTC Troubleshooting Index

DTC*	SH-AWD Indicator Light	Detection Item	Page
12-1	ON	Lateral Acceleration Sensor Malfunction	(see page 15-32)
12-2	ON	Lateral Acceleration Sensor Malfunction	(see page 15-32)
12-3	ON	Lateral Acceleration Sensor Malfunction	(see page 15-32)
14-1	ON	Lateral Acceleration Sensor Neutral Position Incorrect	(see page 15-32)
14-2	ON	Lateral Acceleration Sensor Neutral Position Incorrect	(see page 15-32)
16-1	ON	Steering Angle Sensor Signal Malfunction	(see page 15-33)
16-3	ON	Steering Angle Sensor Neutral Position Incorrect	(see page 15-33)
27-1	ON	Hypoid Gear Speed Sensor (Open or Short)	(see page 15-34)
27-2	ON	Hypoid Gear Speed Sensor Malfunction	(see page 15-38)
33-1	ON	Yaw Rate Sensor Malfunction	(see page 15-41)
33-2	ON	Yaw Rate Sensor Malfunction	(see page 15-41)
33-3	ON	Yaw Rate Sensor Malfunction	(see page 15-41)
35-1	ON	Yaw Rate Sensor Neutral Position Incorrect	(see page 15-41)
35-2	ON	Yaw Rate Sensor Neutral Position Incorrect	(see page 15-41)
41-1	ON	F-CAN Malfunction (Lost of Communication with Powertrain Control Module (PCM))	(see page 15-42)
41-2	ON	F-CAN Malfunction (Lost of Communication with VSA Modulator-Control Unit)	(see page 15-43)
41-3	ON	F-CAN Malfunction (Lost of Communication with Gauge Control Module)	(see page 15-44)
41-6	ON	F-CAN Malfunction (Lost of Communication with Steering Angle Sensor)	(see page 15-45)
42-1	ON	Differential fluid Temperature Sensor (Short to Power)	(see page 15-46)
42-2	ON	Differential fluid Temperature Sensor (Open/GND Short)	(see page 15-47)
43-1	ON	Differential fluid Temperature Sensor Circuit Malfunction	(see page 15-50)
44-11	ON	SH-AWD Control Unit	(see page 15-51)
44-12	ON	SH-AWD Relay Stuck ON	(see page 15-52)
44-21	ON	SH-AWD Control Unit	(see page 15-53)
44-31	ON	SH-AWD Relay Stuck OFF	(see page 15-53)
44-32	ON	SH-AWD Control Unit Power Supply Stuck ON	(see page 15-56)
44-41	ON	SH-AWD Control Unit Power Supply Stuck OFF	(see page 15-56)
44-50	ON	SH-AWD Control Unit Power Supply Voltage Low	(see page 15-57)
46-1	ON	SH-AWD Control Unit Internal Power Supply Circuit (Open or Short)	(see page 15-59)

*: DTCs are indicated by the SH-AWD indicator when the 16P data link connector (DLC) is connected to the HDS.

(cont'd)

DTC Troubleshooting Index (cont'd)

DTC*	SH-AWD Indicator Light	Detection Item	Page
52-3	ON	Left Clutch Electromagnetic Coil Current Malfunction	(see page 15-60)
53-1	ON	Left Clutch Electromagnetic Coil (Open)	(see page 15-63)
53-2	ON	Left Clutch Electromagnetic Coil (Short)	(see page 15-65)
53-3	ON	Left Clutch Electromagnetic Coil (Open)	(see page 15-63)
53-4	ON	Left Clutch Electromagnetic Coil (Short)	(see page 15-65)
56-3	ON	Right Clutch Electromagnetic Coil Current Malfunction	(see page 15-67)
57-1	ON	Right Clutch Electromagnetic Coil (Open)	(see page 15-70)
57-2	ON	Right Clutch Electromagnetic Coil (Short)	(see page 15-72)
57-3	ON	Right Clutch Electromagnetic Coil (Open)	(see page 15-70)
57-4	ON	Right Clutch Electromagnetic Coil (Short)	(see page 15-72)
59-1	ON	SH-AWD Control Unit Power Supply Monitor Circuit	(see page 15-74)
61-1	ON	Shift Solenoid Valve (Open)	(see page 15-74)
61-2	ON	Shift Solenoid Valve (Short)	(see page 15-76)
74-1	ON	One Way Clutch Malfunction	(see page 15-77)
75-1	ON	Acceleration Device Malfunction (Stuck OFF)	(see page 15-78)
75-2	ON	Acceleration Device Malfunction (Stuck ON)	(see page 15-79)
76-1	ON	Rear Differential Fluid Overheats	(see page 15-80)
77-1	ON	The Functional Abnormalities of Fuel Emission or Automatic Transmission.	(see page 15-83)
77-2	ON	The Functional Abnormalities of VSA Modulator-Control Unit	(see page 15-83)
77-3	ON	The Functional Abnormalities of Gauge Control Module	(see page 15-84)
77-6	ON	Steering Angle Sensor Malfunction	(see page 15-84)
78-xx	ON	SH-AWD Control Unit Self-diagnostic Malfunction	(see page 15-85)
81-1	ON	Left Search Coil Sensor Malfunction	(see page 15-85)
81-2	ON	Left Search Coil Sensor (Open or Short)	(see page 15-86)
81-3	ON	Left Search Coil Magnetic Flux Characteristic	(see page 15-88)
82-1	ON	Right Search Coil Sensor Malfunction	(see page 15-89)
82-2	ON	Right Search Coil Sensor (Open or Short)	(see page 15-89)
82-3	ON	Right Search Coil Sensor Magnetic Flux Characteristic	(see page 15-91)

*: DTCs are indicated by the SH-AWD indicator when the 16P data link connector (DLC) is connected to the HDS.

Symptom Troubleshooting Index

NOTE: Most problems in the SH-AWD unit can be diagnosed by identifying noises from the gears or bearings. Care should be taken during diagnosis not to confuse differential noises with those from other drivetrain components.

Symptom	Diagnostic Procedure	Also check for
The SH-AWD indicator does not go off, and no DTCs are stored	Symptom troubleshooting (see page 15-92).	Low battery voltage
The SH-AWD indicator does not come on	Symptom troubleshooting (see page 15-93).	
Gear or bearing noises	• Fluid level too low. • Incorrect or worn out fluid. • Damaged or chipped gears. • Incorrect tire size (rolling circumference).	• Add fluid • Drain and fill the differential • Replace the differential carrier assembly
Rear differential overheats	• Fluid level too low. • Incorrect fluid type. • Incorrect tire size (rolling circumference).	• Add fluid • Drain and fill the differential
Rear differential leaks fluid	• Fluid level too high. • Clogged breather hose. • Worn or damaged oil seal. • Damaged sealing washer. • Loose mounting bolts or inadequate sealing.	• Lower to proper level • Clean or replace • Replace the oil seal • Replace the sealing washer • Recheck torque or apply sealant
Rear differential screeches, whines, moans, or squeaks	• Fluid level too low. • Incorrect or worn out fluid. • Incorrect tire rolling circumference. • Damaged oil pump.	• Add fluid • Drain and fill the differential • Adjust tire pressure or replace tires • Replace the differential carrier assembly
Noise during acceleration, or when accelerating from a full stop	• Incorrect pre-load. • Incorrect of backlash of hypoid gear. • Damaged or chipped gears. • Incorrect tire size (rolling circumference).	• Pre-load adjustment • Replace the differential carrier assembly
HDS does not communicate with the SH-AWD control unit or the vehicle	Troubleshooting the DLC circuit (see page 11-211).	

System Description

SH-AWD System

Outline
This vehicle is equipped with a Super Handling All-Wheel Drive® (SH-AWD®) rear differential system. This system uses electromagnetic clutches, an acceleration system, and the SH-AWD control unit to control front to rear torque distribution and independent left to right rear torque distribution. This allows the system to function both as a limited slip differential and as a torque distribution system to improve standing start performance, straight-line stability, climbing, and cornering ability.

SH-AWD features include:
- Independent torque distribution to the front and rear wheels, and to the left and right wheels for neutral handling when cornering.
- Controls differential (inside/outside) wheel speed in a turn to increase cornering stability.
- Limited slip differential function for better acceleration.

Operation
In a normal turn, the radius of the front wheels is shorter than the radius that the rear wheels travel. If the front and rear wheels are driven at the same speed, full power is not transmitted. The SH-AWD system monitors the speed of the front wheels and increases the speed of the outside rear wheel proportionally to accelerate it around the larger radius. This improves stability and steering response. On slippery surfaces this provides the improved traction of a 4-wheel drive system.

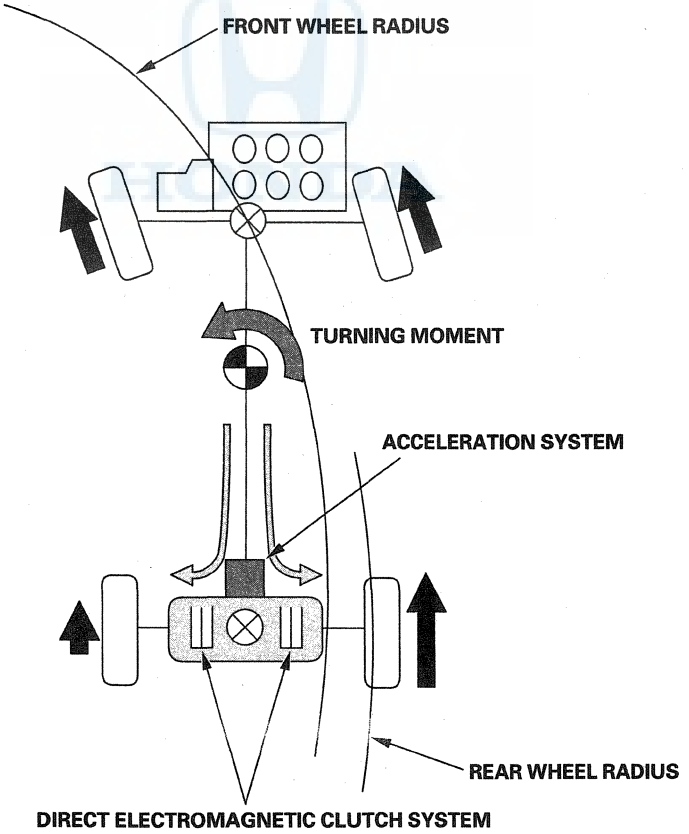

Construction

1. The differential assembly has a conventional hypoid ring and pinion gear set.

2. The acceleration system consists of the high clutch, the one-way clutch/low clutch, the planetary gear set, and the oil pump. When accelerating straight ahead, the one-way clutch and the low clutch applies the driving force to the rear wheels. During normal straight ahead driving, only the low clutch applies driving force to the rear wheels. When turning, the high clutch connects the acceleration planetary gear to the differential. This speeds up the rear wheels to compensate for the different paths the front and rear wheels take. When decelerating, the differential drives the oil pump to generate hydraulic pressure.

3. The direct electromagnetic clutch system consists of the coils, the planetary gear sets, and the multi-plate clutches that are installed in the side cases on either side of the differential carrier. When driving straight ahead, both rear wheels rotate at the same speed. When turning, current is applied to the appropriate outside wheel main coil to engage the clutch. The amount of current passed through the electromagnetic clutch controls the amount of driving force to the outside wheel.

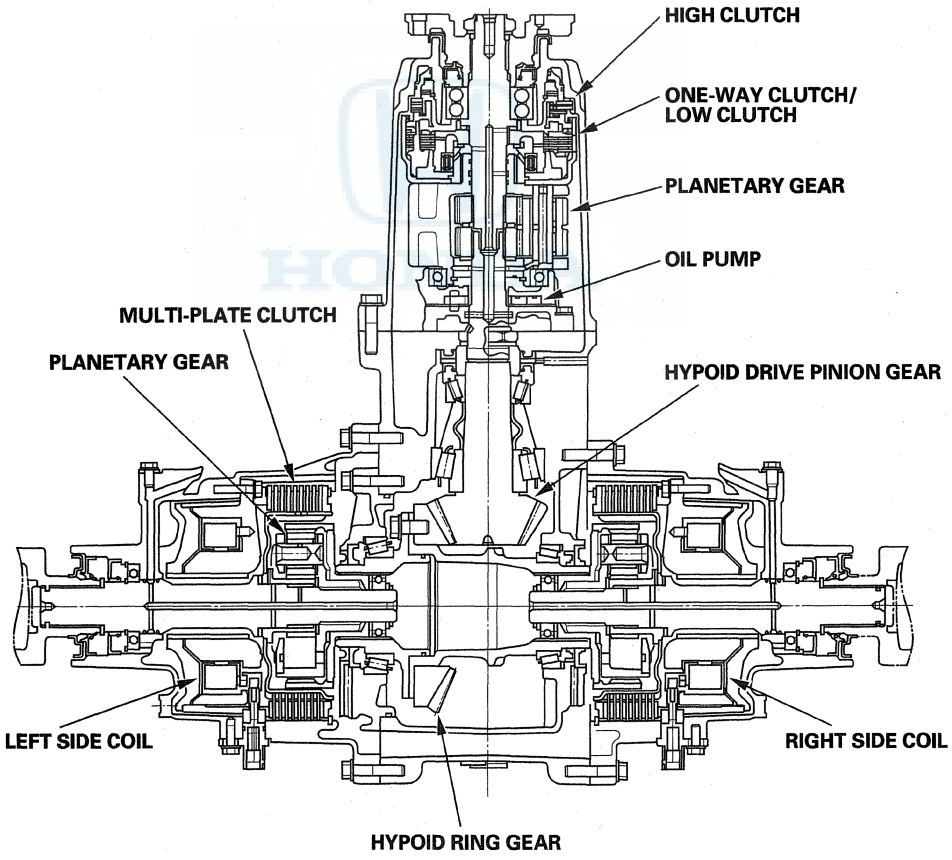

(cont'd)

System Description (cont'd)

SH-AWD 4WD Control System

Control System
The SH-AWD control system consists of a SH-AWD control unit, the PCM, the VSA modulator-control unit, along with various sensors and switches that detect the steering angle, the lateral G force, the yaw, and the vehicle speed. A fluid temperature sensor and a hypoid gear speed sensor are located on the rear differential. The control units exchange information via the CAN communication lines. The SH-AWD control unit has a self-diagnostic function. If a malfunction is detected, the SH-AWD control unit turns on the SH-AWD indicator in the gauge control module and the system goes into fail-safe mode. When in fail-safe mode, the vehicle disable the SH-AWD differential. The vehicle defaults to front wheel drive, and reduces engine torque to suit the driving conditions.

Driving Force Control
The driving force control distributes the power based on the driver's inputs. It distributes torque to the front and rear wheels based on the throttle opening and the available engine torque output. When turning, torque is applied to the rear wheels independently based on the lateral G input and the direction of the turn. This generates an inward yaw movement to help steer the vehicle around the turn.

Feedback Control
In low traction conditions, where a wheel will spin or the vehicle tends to skid, the amount of torque is distributed to match the traction available.

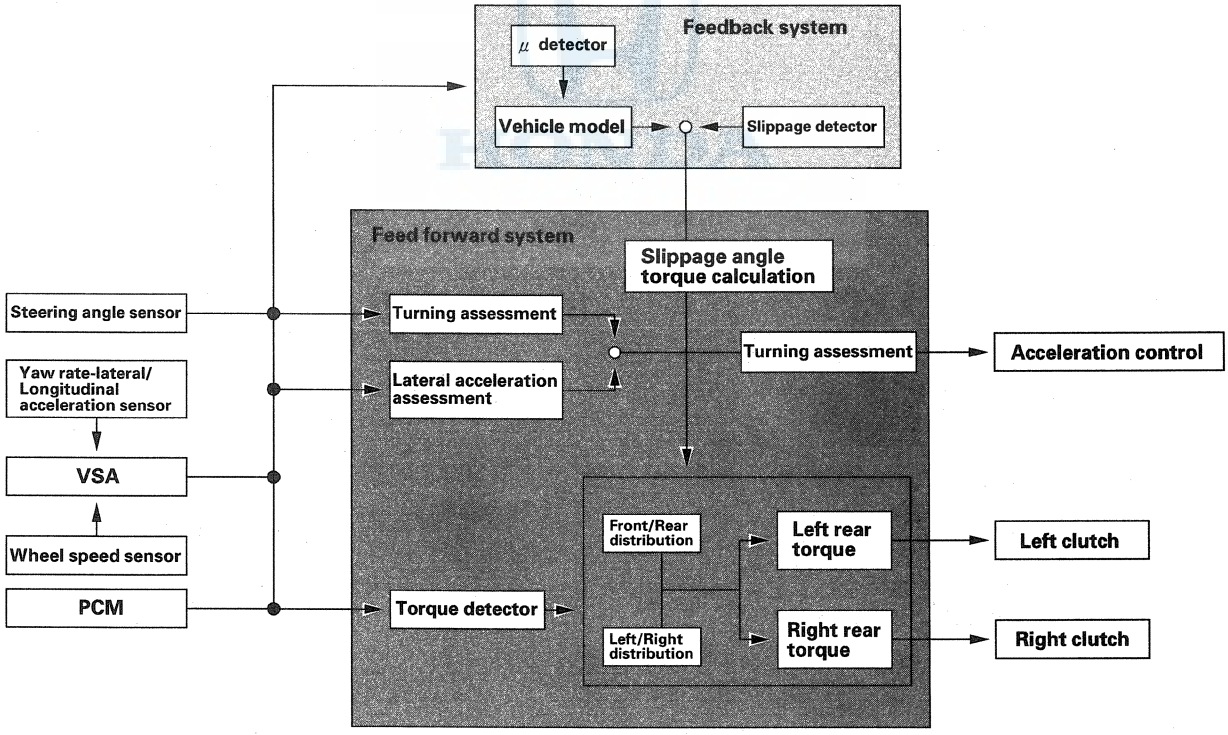

Acceleration System

Construction

The acceleration system consists of the one-way clutch/low clutch, the high clutch, the planetary gear, and the oil pump.

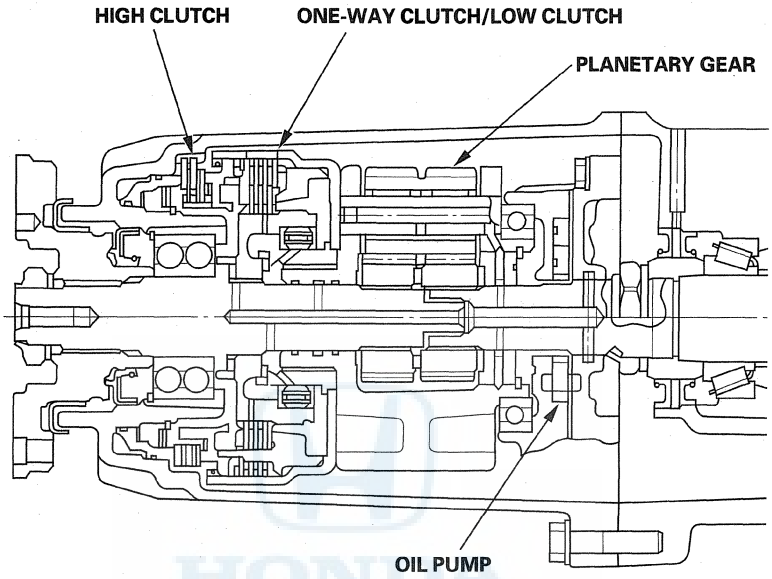

(cont'd)

System Description (cont'd)

Operation

Acceleration and deceleration in a straight line

1. The one-way clutch/low clutch connects the propeller shaft to the planetary gear carrier. The high clutch is disengaged by spring force.
2. The propeller shaft, the planetary gear carrier, and the pinion gear all rotate at the same speed.

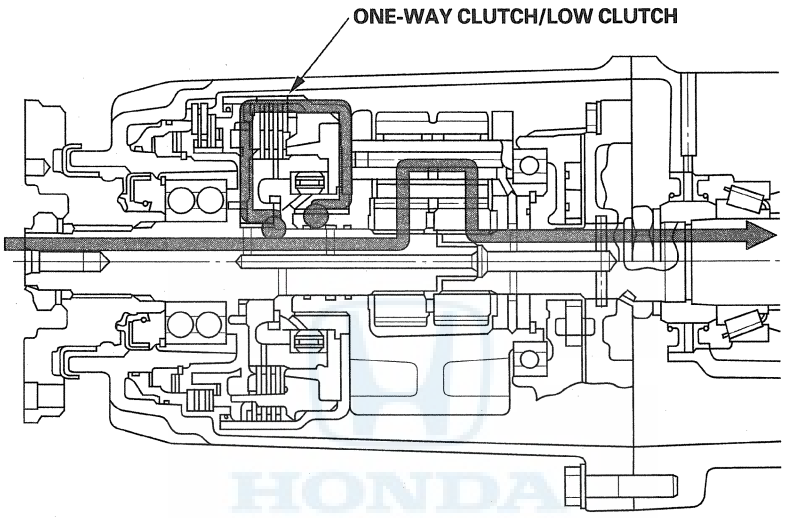

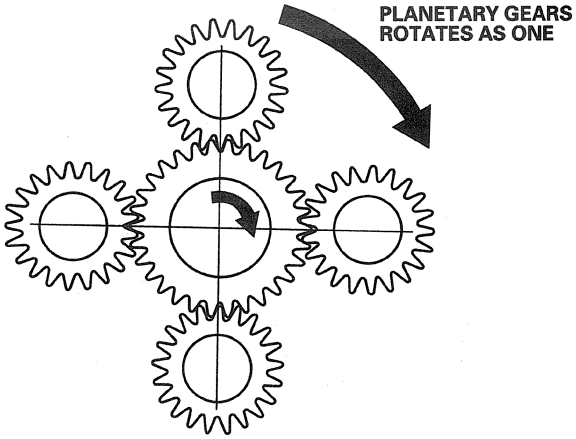

Operation

Acceleration system in a corner

1. Hydraulic pressure from the shift solenoid valve engages the high clutch.
2. The high clutch locks the planetary gears to the propeller shaft, and the driving force is increased to both rear wheels.
3. The high clutch mechanically releases the low clutch.

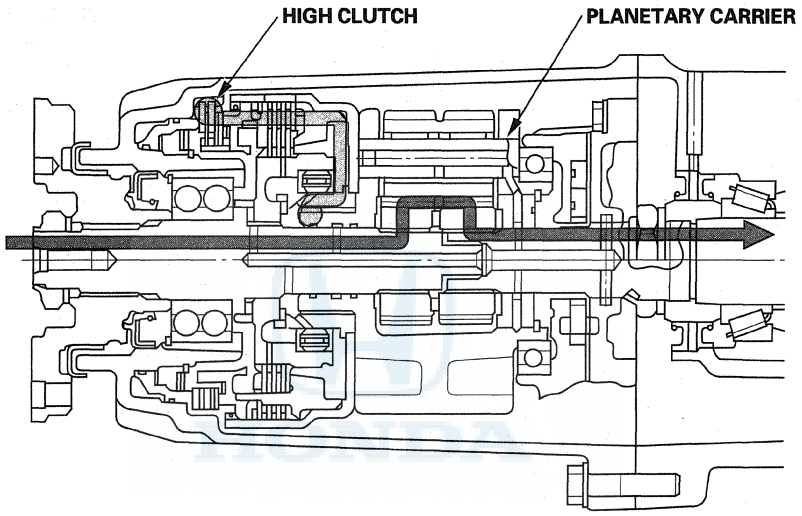

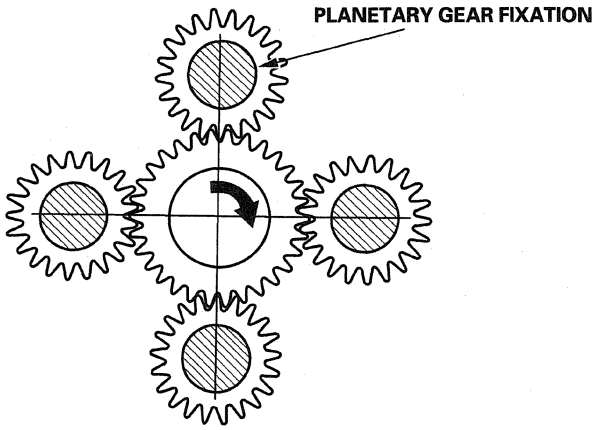

(cont'd)

System Description (cont'd)

Acceleration System Hydraulic Pressure Control

Construction

The hydraulic pressure system consists of the shift solenoid valve, the oil pump, the reverse one-way valve, the regulator valve, the shift valve, the accumulator, and the orifice.

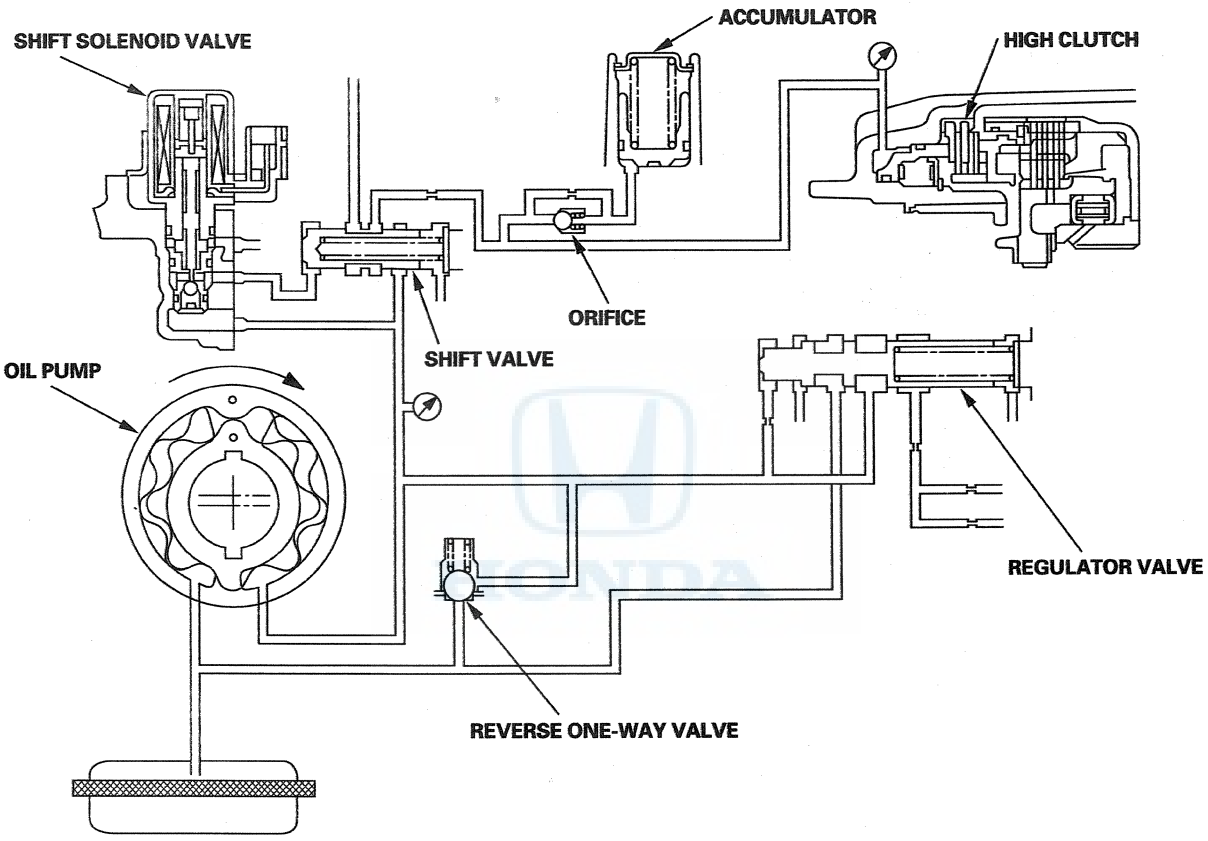

Operation

Driving in a straight line

The pressure regulator valve regulates the hydraulic pressure generated by the oil pump. Because the shift solenoid valve is off, hydraulic pressure is not applied to the high clutch piston, and it remains disengaged. If the hydraulic pressure overcomes the pressure regulator valve, the pressure is relieved from the pump circuit to reduce pump drive losses.

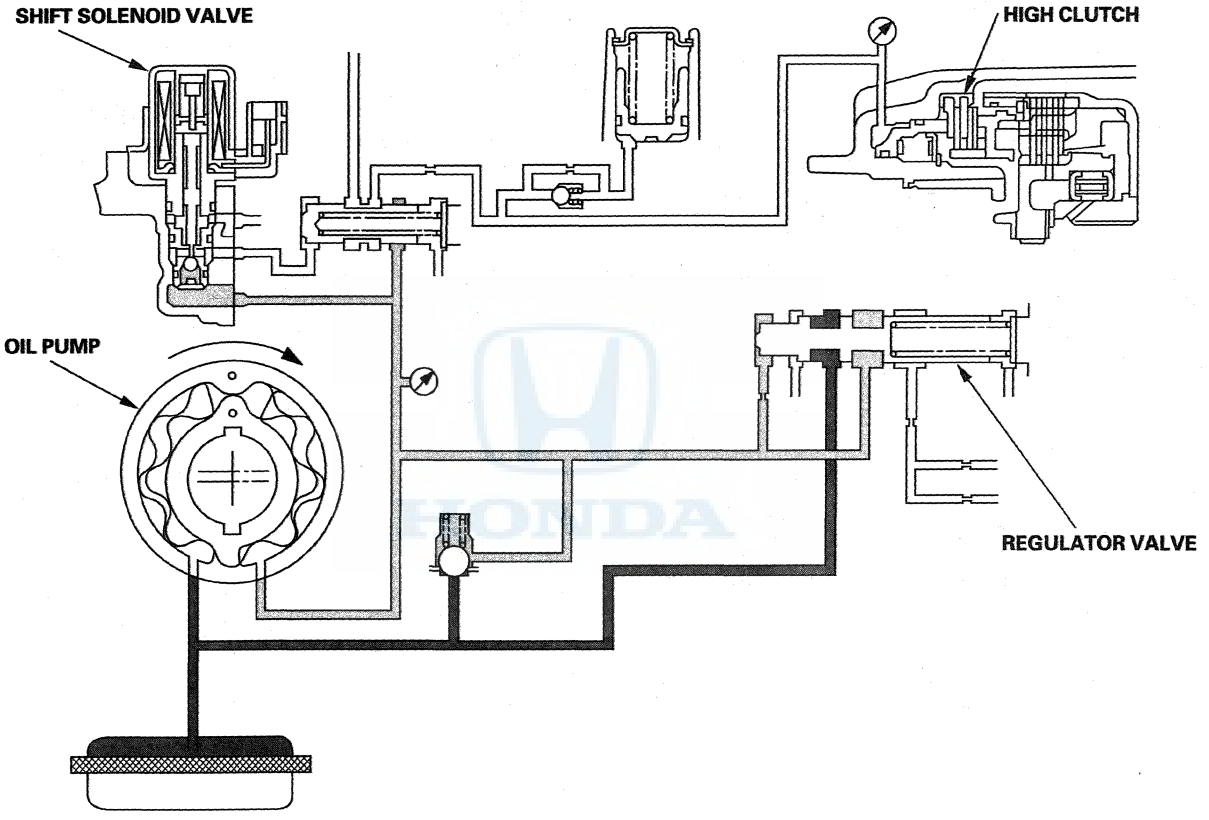

(cont'd)

System Description (cont'd)

Cornering
The shift solenoid valve is energized, applying hydraulic pressure to the high clutch piston via the shift valve to engage the high clutch. An accumulator and an orifice are installed between the shift valve and the high clutch piston to reduce the fluctuations in hydraulic pressure.

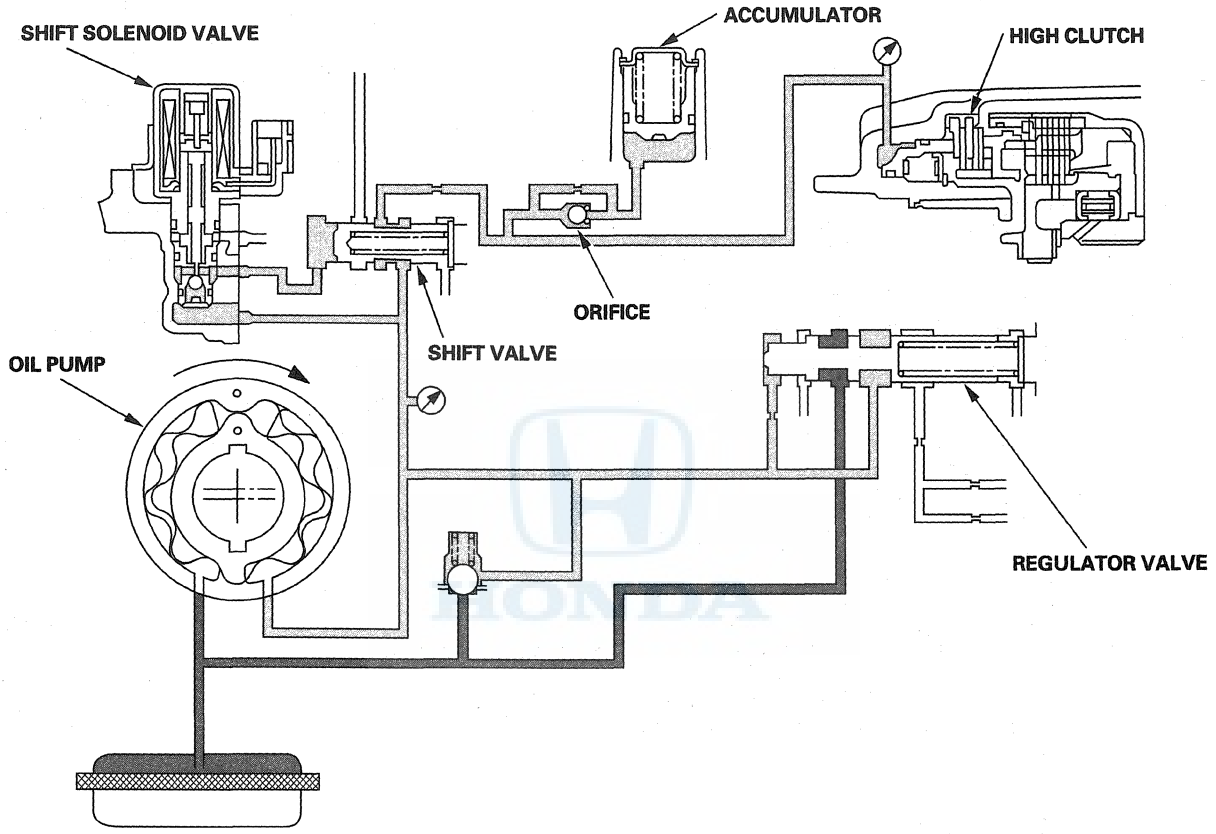

When backing up
The reverse rotation of the propeller shaft causes the oil pump to rotate in reverse. This opens the reverse one-way valve and allows the oil to circulate in the pump and valve body without draining the system. This prevents aeration of the oil which can delay the response of the differential.

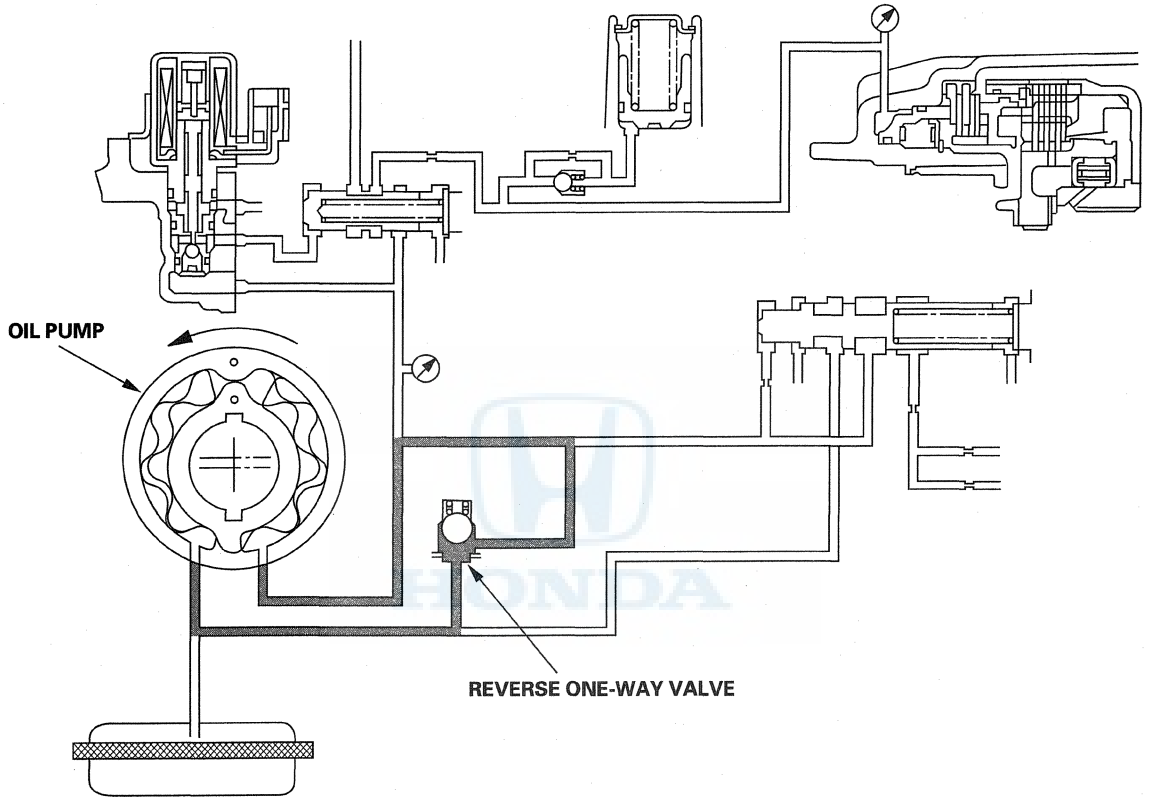

(cont'd)

System Description (cont'd)

Electromagnetic Clutch System

Construction

The electromagnetic clutch system is incorporated into the side case assemblies on both sides of the differential case. The system consists of the multi-plate clutches, the planetary gears, the pressure guides, the solenoid coil assembly (the search coil and the main coil), the armature assembly (the slider and the armature), and the yoke.

Components	Purpose
Multi-plate clutches	Convert thrust into torque, absorb wheel speed differences
Planetary gears	Magnify and convey clutch torque
Pressure guides	Reduce fluctuations in pressure
Search coils	Detect magnetic flux
Main coils	Generates magnetic fields
Slider	Centers the armature
Armature	Generates magnetic flux to generate thrust
Yoke	Generates magnetic flux to clamping force

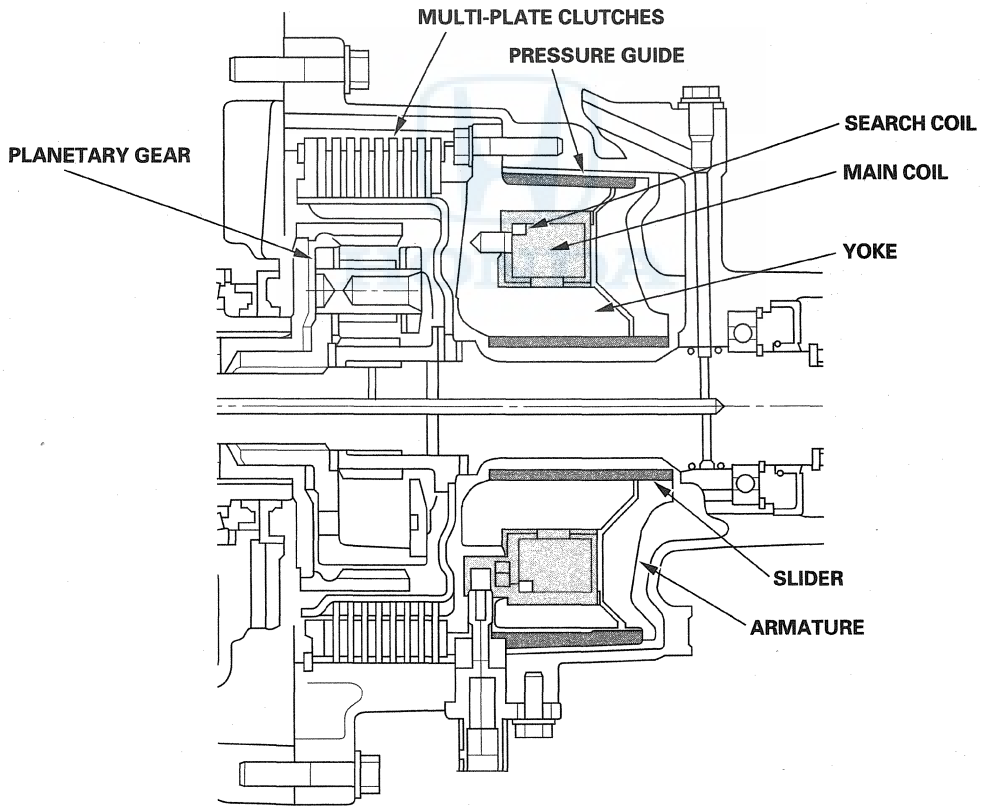

Operation

The SH-AWD control unit receives inputs from the PCM and the VSA modulator-control unit on the driving conditions via the CAN. The SH-AWD control unit sends signals to the main coils, which engage the electromagnetic clutches that connect the planetary gear set. This increases the torque applied to the rear wheels. The amount of current sent to the clutch is continuously varied as driving conditions change.

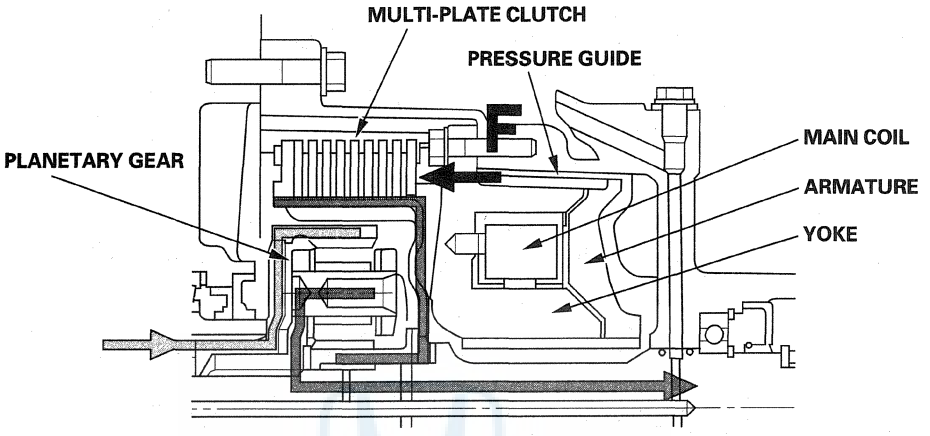

WHEN THERE IS NO THRUST

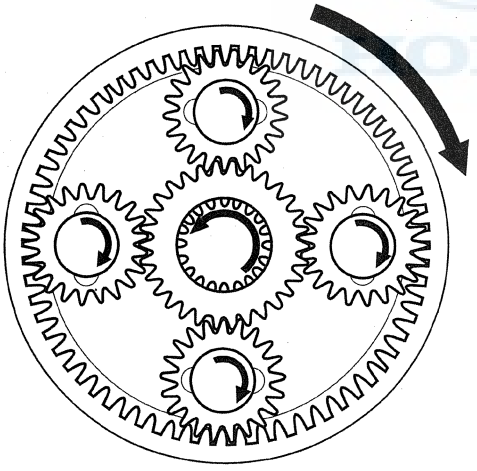

WHEN THRUST IS GENERATED

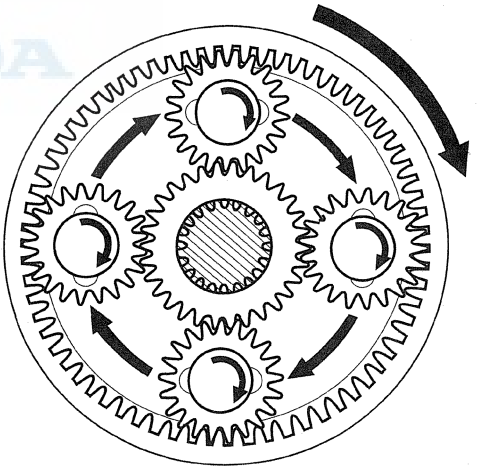

(cont'd)

System Description (cont'd)

Search Coil Detection System

As the clutch discs wear, the air gap between the pressure guides and the multi-plate clutches decreases. The decrease in air gap changes the magnetic field generated by the main coil and the yoke. The search coil detects these changes in the magnetic field. The SH-AWD control unit uses predetermined maps to compensate for the changes to maintain precise control and smooth clutch engagement.

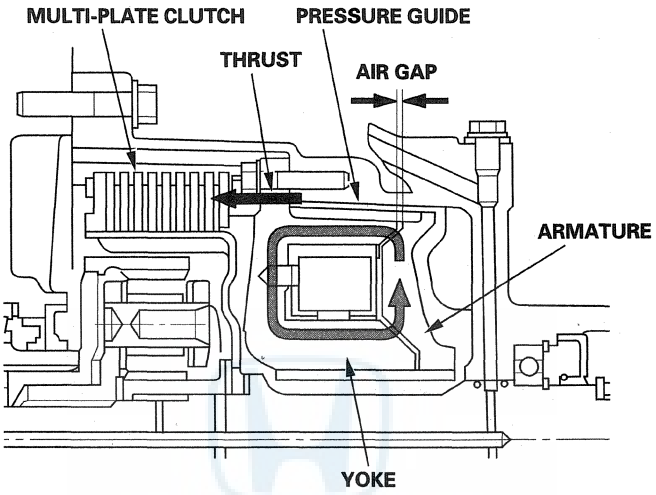

SH-AWD SYSTEM OPERATION LIST

	MODE / ELEMENT	FORWARD								BACKWARD			
		STRAIGHT		STRAIGHT (LSD)		LEFT TURN (DIRECT)		LEFT TURN (SPEED INCREASER)		STRAIGHT		STRAIGHT (LSD)	
		ACCEL-ERATION	DECEL-ERATION	ACCEL-ERATION	DECEL-ERATION	ACCEL-ERATION	DECEL-ERATION	ACCEL-ERATION	DECEL-ERATION	ACCEL-ERATION	DECEL-ERATION	ACCEL-ERATION	DECEL-ERATION
1	HIGH CLUTCH	—	—	—	—	—	—	ON	ON	—	—	—	—
2	LOW CLUTCH	ON	ON	ON	ON	ON	ON	—	—	ON	ON	ON	ON
3	LEFT ELECTRO-MAGNETIC CLUTCH	MID	LOW	HIGH	LOW	LOW	LOW	LOW	LOW	MID	LOW	HIGH	LOW
4	RIGHT ELECTRO-MAGNETIC CLUTCH	MID	LOW	HIGH	LOW	HIGH	LOW	LOW	LOW	MID	LOW	HIGH	LOW

- When turning to the right, the magnitudes of 3 and 4 are transposed when compared with the left turn shown.
- Conditions of turn (direct coupling): For the turns with a lateral G of less than 0.075G when turning at a vehicle speed less than 16 mph (30 km/h) or over 65 mph (120 km/h).
- Conditions of turn (speed acceleration): For the turns with a lateral G of more than 0.075G when turning at a vehicle speed between 16 mph (30 km/h) to 65 mph (120 km/h).
- Soft: 0—392 N·m (0—40 kgf·m)
  Medium: 392—785 N·m (40—80 kgf·m)
  Hard: 785—981 N·m (80—100 kgf·m)

CORNERING ACCELERATION (LEFT TURN)

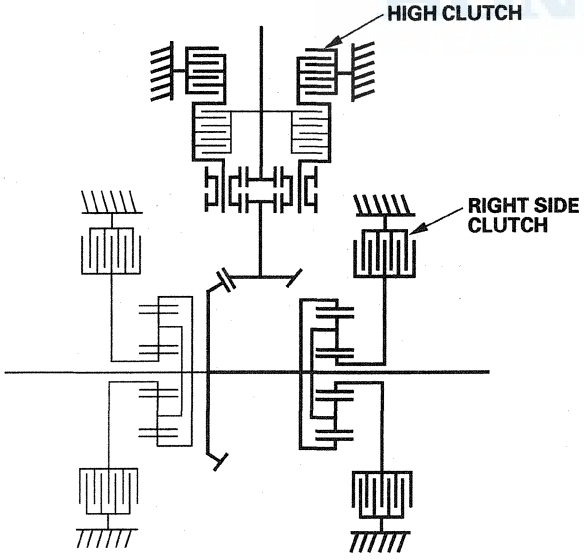

STRAIGHT AHEAD (or BACKWARD) ACCELERATION

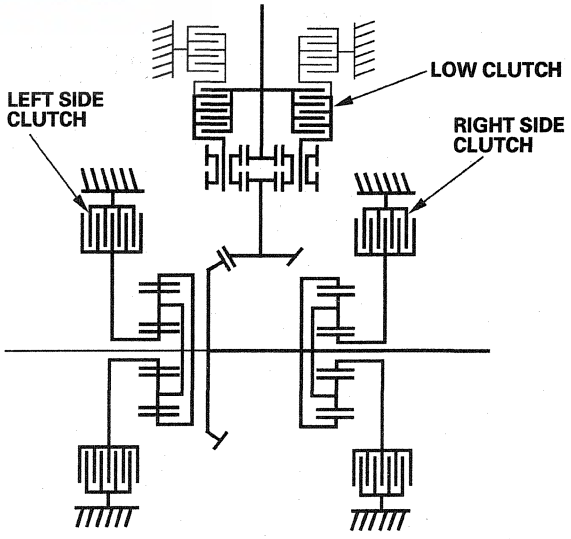

(cont'd)

System Description (cont'd)

Electric Control System

SH-AWD Control Unit Electrical Connections

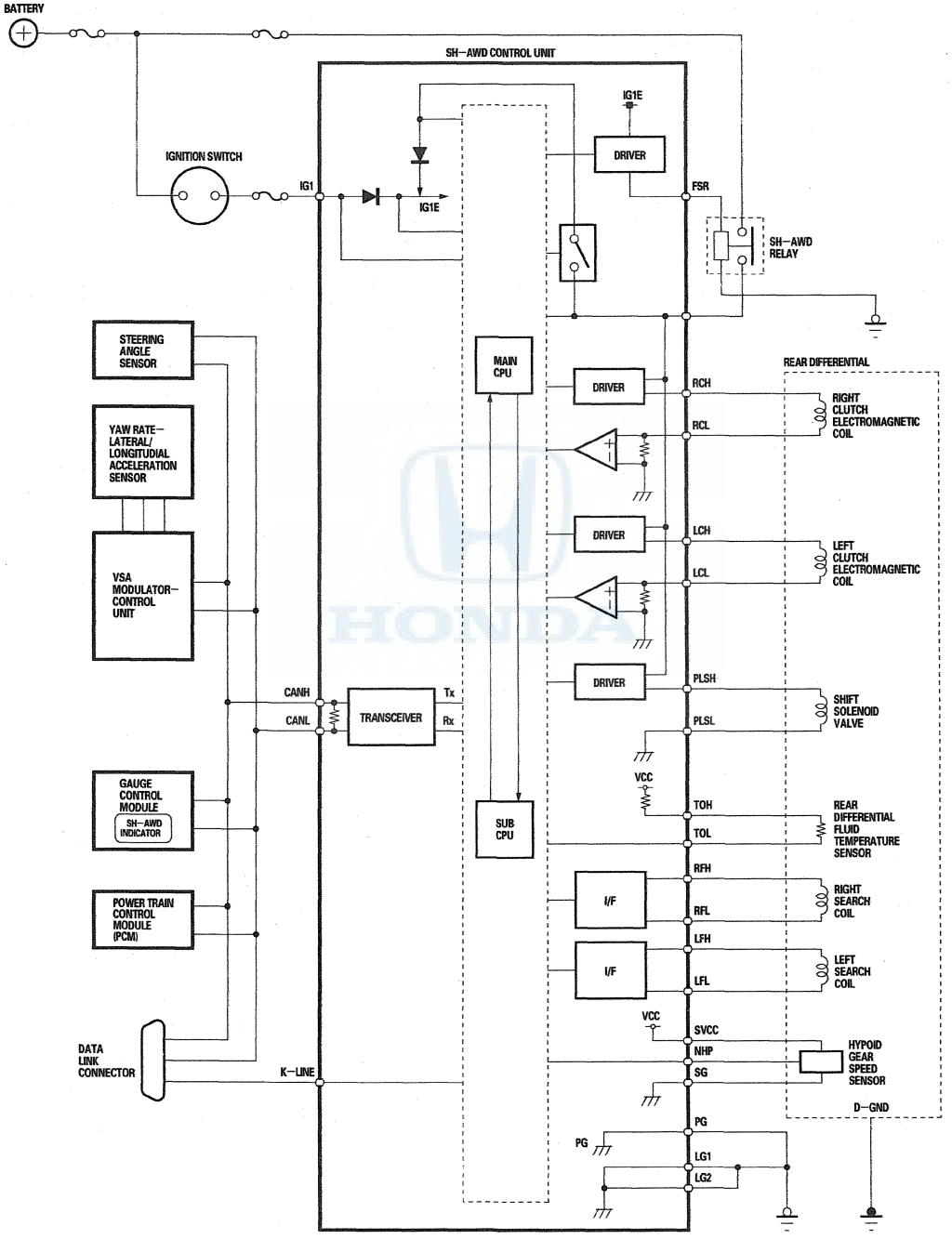

SH-AWD Control Unit Inputs and Outputs

The SH-AWD control unit terminal voltages and the measuring conditions for the SH-AWD inputs and outputs test are done with the SH-AWD connectors connected.

SH-AWD Control Unit Connector A (26P) Terminal Locations

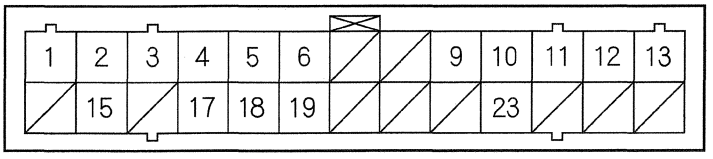

Terminal side of male terminals

Terminal number	Wire color	Signal	Description	Measuring Conditions/Terminal Voltage
A1	RED	PLSH	Drives shift solenoid valve (positive)	With solenoid off: about 0 V With solenoid on: battery voltage
A2	WHT	NHP	Detects hypoid speed sensor signal	With ignition switch ON (II): about 0 V or about 5.0 V
A3	ORN	FSR	Drives SH-AWD relay	With ignition switch ON (II): about 0 V or battery voltage
A4	GRN	LFH	Detects left search coil signal (positive)	With ignition switch ON (II): about 2.5 V
A5	BRN	SG	Hypoid gear speed sensor ground	With ignition switch ON (II): about 0 V
A6	YEL	RFH	Detects right search coil signal (positive)	With ignition switch ON (II): about 2.5 V
A9	WHT	TOH	Power supply for differential fluid temperature sensor	With ignition switch ON (II): about 4.7 V to 5.0 V
A10	RED	CANL	F-CAN communication signal	With ignition switch ON (II): about 2.5 V or about 3.5 V
A11	WHT	CANH	F-CAN communication signal	With ignition switch ON (II): about 2.5 V or about 3.5 V
A12	BLK	LG1	Unit ground	With ignition switch ON (II): about 0 V
A13	BLU	IG1	Power supply for SH-AWD control unit	With ignition switch ON (II): battery voltage

(cont'd)

System Description (cont'd)

SH-AWD Control Unit Inputs and Outputs

The SH-AWD control unit terminal voltages and the measuring conditions for the SH-AWD inputs and outputs test are done with the SH-AWD connectors connected.

SH-AWD Control Unit Connector A (26P) Terminal Locations

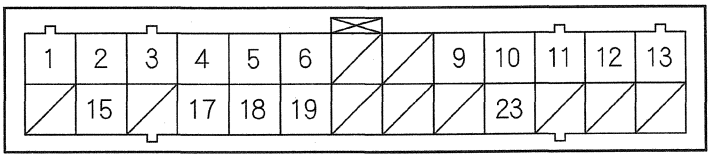

Terminal side of male terminals

Terminal number	Wire color	Signal	Description	Measuring Conditions/Terminal Voltage
A15	LT BLU	K-LINE	Communication line SH-AWD control unit-to-DLC	With ignition switch ON (II): about 0 V or battery voltage
A17	RED	LFL	Detects left search coil signal (negative)	With ignition switch ON (II): about 0 V
A18	PNK	SVCC	Power supply for hypoid gear speed sensor	With ignition switch ON (II): about 5.0 V
A19	RED	RFL	Detects right search coil signal (negative)	With ignition switch ON (II): about 0 V
A23	BLK	TOL	Detects differential fluid temperature sensor (negative)	With ignition switch ON (II): about 0.2 V to 4.7 V (Depending on ATF temperature)

SH-AWD Control Unit inputs and Outputs

The SH-AWD control unit terminal voltages and the measuring conditions for the SH-AWD inputs and outputs test are done with the SH-AWD connectors connected.

SH-AWD Control Unit Connector B (8P) Terminal Locations

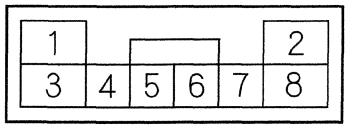

Terminal side of male terminals

Terminal number	Wire color	Signal	Description	Measuring Conditions/Terminal Voltage
B1	BLU	PWR	Power supply for SH-AWD actuator	With ignition switch ON (II): battery voltage
B2	BLK	PG	Actuator ground	With ignition switch ON (II): about 0 V
B3	BLK	LG2	Unit ground	With ignition switch ON (II): about 0 V
B4	BLU	LCH	Drives left clutch electromagnetic coil (positive)	With clutch off: about 0 V With clutch on: battery voltage
B5	WHT	LCL	Drives left clutch electromagnetic coil (negative)	With ignition switch ON (II): about 0 V
B6	BLU	RCH	Drives right clutch electromagnetic coil (positive)	With clutch off: about 0 V With clutch on: battery voltage
B7	RED	RCL	Drives right clutch electromagnetic coil (negative)	With ignition switch ON (II): about 0 V
B8	BRN	PLSL	Drives shift solenoid (negative)	With ignition switch ON (II): about 0 V

Circuit Diagram

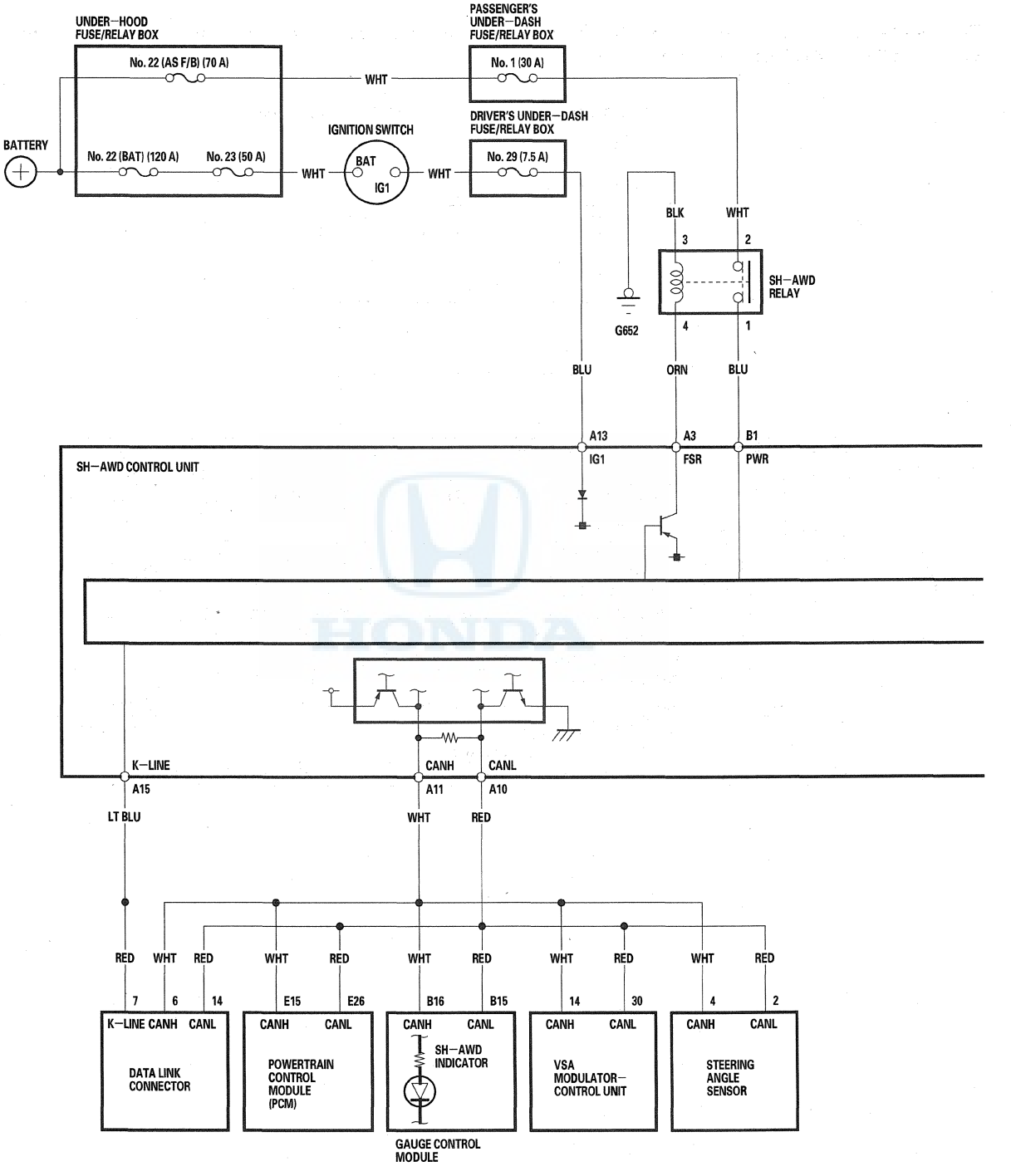

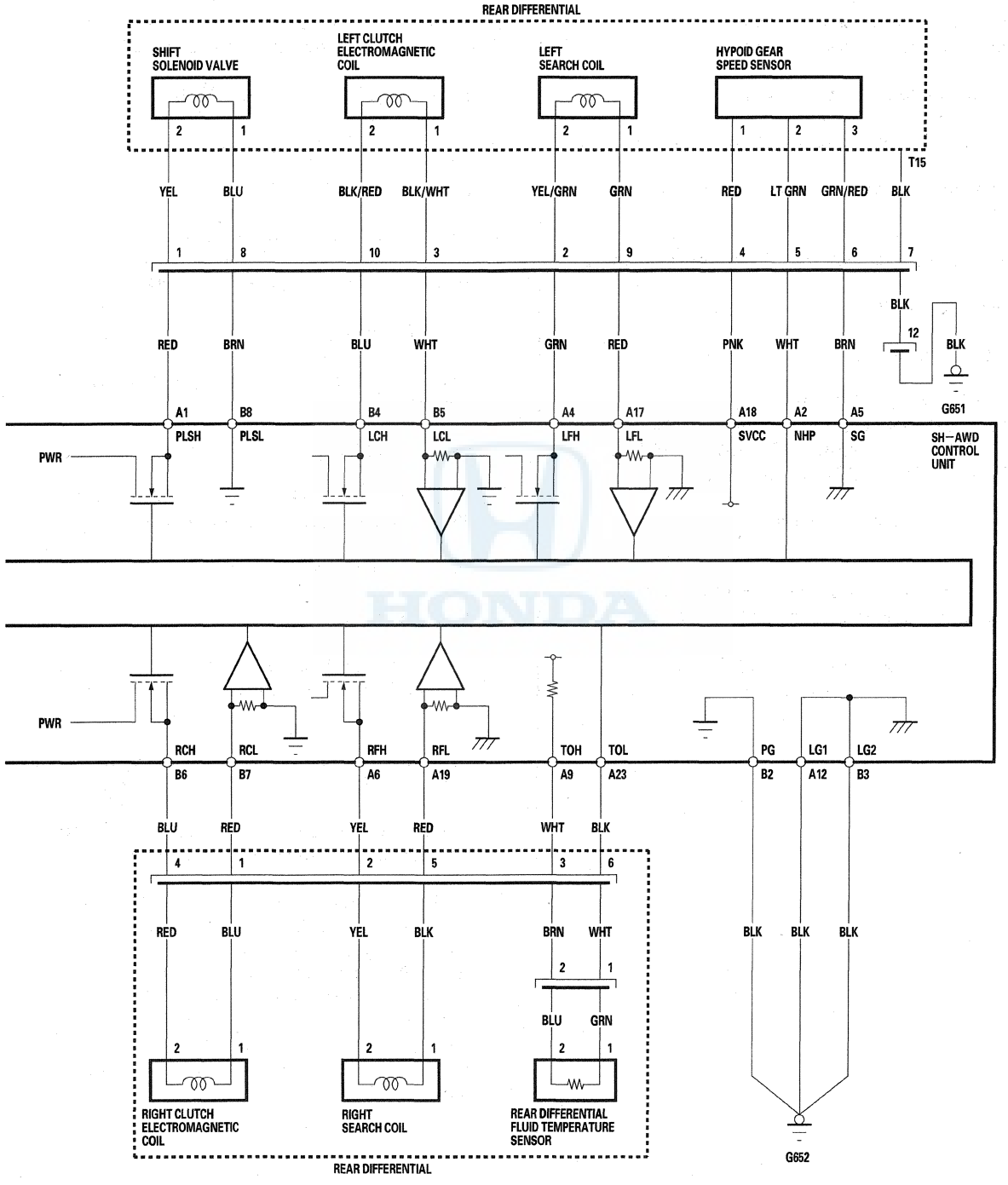
REAR DIFFERENTIAL
SHIFT SOLENOID VALVE
LEFT CLUTCH ELECTROMAGNETIC COIL
LEFT SEARCH COIL
HYPOID GEAR SPEED SENSOR
T15
YEL
BLU
BLK/RED
BLK/WHT
YEL/GRN
GRN
RED
LT GRN
GRN/RED
BLK
RED
BRN
BLU
WHT
GRN
RED
PNK
WHT
BRN
BLK
G651
A1
B8
B4
B5
A4
A17
A18
A2
A5
PLSH
PLSL
LCH
LCL
LFH
LFL
SVCC
NHP
SG
SH–AWD CONTROL UNIT
PWR
PWR
RCH
RCL
RFH
RFL
TOH
TOL
PG
LG1
LG2
B6
B7
A6
A19
A9
A23
B2
A12
B3
BLU
RED
YEL
RED
WHT
BLK
BLK
BLK
BLK
RED
BLU
YEL
BLK
BRN
WHT
BLU
GRN
RIGHT CLUTCH ELECTROMAGNETIC COIL
RIGHT SEARCH COIL
REAR DIFFERENTIAL FLUID TEMPERATURE SENSOR
REAR DIFFERENTIAL
G652

DTC Troubleshooting

DTC 12-1, 12-2, 12-3: Lateral Acceleration Sensor Malfunction

NOTE: Before you troubleshoot, review the general troubleshooting information (see page 15-4).

1. Turn the ignition switch to ON (II).
2. Check for DTCs in the VSA system with the HDS.

   Are any lateral acceleration sensor DTCs indicated?

   YES—Go to the indicated DTC's troubleshooting. ■

   NO—Go to step 3.
3. Park the vehicle on a level surface.
4. Compare the VOLTAGE OF LATERAL ACCELERATION SENSOR and the LATERAL ACCELERATION SENSOR NEUTRAL POSITION DATA in the DATA LIST with the HDS.

   Is there difference between those two within 0.2 V?

   YES—Replace the yaw rate-lateral/longitudinal acceleration sensor (see page 19-103). ■

   NO—Do the yaw rate-lateral/longitudinal acceleration neutral position memorization (see page 15-7). ■

DTC 14-1, 14-2: Lateral Acceleration Sensor Neutral Position Incorrect

NOTE: Before you troubleshoot, review the general troubleshooting information (see page 15-4).

1. Turn the ignition switch to ON (II).
2. Clear the DTC with the HDS.
3. Start the engine.
4. Check for DTCs with the HDS.

   Is DTC 14-1 and/or 14-2 indicated?

   YES—Go to step 5.

   NO—Intermittent failure, the system is OK at this time. ■
5. Park the vehicle on a level surface.
6. Check the VOLTAGE OF LATERAL ACCELERATION SENSOR in the DATA LIST with the HDS.

   Is there about 2.2—2.8 V?

   YES—Go to step 7.

   NO—Check for installation of the yaw rate-lateral/longitudinal acceleration sensor (see page 19-103). ■
7. Check for yaw rate-lateral/longitudinal acceleration neutral position memorization with the HDS.

   Is the yaw rate-lateral/longitudinal acceleration neutral position memorization completed?

   YES—Substitute a known-good SH-AWD control unit (see page 15-99) and recheck. If the symptom/indication goes away with the known-good SH-AWD control unit, replace the original SH-AWD control unit (see page 15-99). ■

   NO—Do the yaw rate-lateral/longitudinal acceleration neutral position memorization (see page 15-7). ■

DTC 16-1: Steering Angle Sensor Signal Malfunction

NOTE: Before you troubleshoot, review the general troubleshooting information (see page 15-4).

1. Turn the ignition switch to ON (II).
2. Clear the DTC with the HDS.
3. Start the engine.
4. Check for DTCs with the HDS.

   Is DTC 16-1 indicated?

   YES—Go to step 5.

   NO—Intermittent failure, the system is OK at this time. ■
5. Check for DTCs in the VSA system with the HDS.

   Are any steering angle sensor DTCs indicated?

   YES—Go to the indicated DTC's troubleshooting. ■

   NO—Substitute a known-good SH-AWD control unit (see page 15-99) and recheck. If the symptom/indication goes away with the known-good SH-AWD control unit, replace the original SH-AWD control unit (see page 15-99). ■

DTC 16-3: Steering Angle Sensor Neutral Position Incorrect

NOTE:
- Before you troubleshoot, review the general troubleshooting information (see page 15-4).
- Check the wheel alignment (see page 18-5).
- Check for installation of the steering angle sensor.

1. Turn the ignition switch to ON (II).
2. Check for DTCs in the VSA system with the HDS.

   Are any steering angle sensor DTCs indicated?

   YES—Go to the indicated DTC's troubleshooting. ■

   NO—Go to step 3.
3. Start the engine.
4. Check the STEERING ANGLE SENSOR in the DATA LIST with the HDS.

   When the steering wheels is turned slowly, does the value change?

   YES—Go to step 5.

   NO—Substitute a known-good SH-AWD control unit (see page 15-99) and recheck. If the symptom/indication goes away with the known-good SH-AWD control unit, replace the original SH-AWD control unit (see page 15-99). ■

(cont'd)

DTC Troubleshooting (cont'd)

5. Test-drive the vehicle in a straight line at 19 mph (30 km/h) or more.

6. Park the vehicle on a level surface, and center the steering wheel.

7. Check the STEERING ANGLE SENSOR in the DATA LIST with the HDS.

   It is within ±5 deg of center?

   YES—Intermittent failure, the system is OK at this time. If the DTC returns, substitute a known-good SH-AWD control unit (see page 15-99) and recheck. If the symptom/indication goes away with the known-good SH-AWD control unit, replace the original SH-AWD control unit (see page 15-99). ■

   NO—Do the steering angle sensor neutral position memorization (see page 19-104). If the DTC returns, substitute a known-good SH-AWD control unit (see page 15-99) and recheck. If the symptom/indication goes away with the known-good SH-AWD control unit, replace the original SH-AWD control unit (see page 15-99). ■

DTC 27-1: Hypoid Gear Speed Sensor (Open or Short)

NOTE: Before you troubleshoot, review the general troubleshooting information (see page 15-4).

1. Turn the ignition switch to ON (II).

2. Clear the DTC with the HDS.

3. Turn the ignition switch to LOCK (0).

4. Raise the vehicle on a lift, make sure it is securely supported, and allow all four wheels to rotate freely.

5. Start the engine.

6. Turn the VSA off (the VSA OFF lamp in the gauge control module turns on). Run the engine in D until the vehicle speed reaches 19 mph (30 km/h) and maintain the speed for 1 minute, then slow down and stop the wheels.

7. Check for DTCs with the HDS.

   Is DTC 27-1 indicated?

   YES—Go to step 8.

   NO—Intermittent failure, the system is OK at this time. ■

8. Check for DTCs in the VSA system with the HDS.

   Are any VSA System DTCs indicated?

   YES—Go to the indicated DTC's troubleshooting. ■

   NO—Go to step 9.

9. Run the engine in D until the vehicle speed reaches 19 mph (30 km/h) and maintain the speed.

10. Check the HYPOID GEAR SPEED SENSOR VALUE in the DATA LIST with the HDS.

Is a hypoid gear speed sensor value shown?

YES—Check the hypoid gear speed sensor installation. If it is installed properly, substitute a known-good SH-AWD control unit (see page 15-99) and recheck. If the symptom/indication goes away with the known-good SH-AWD control unit, replace the original SH-AWD control unit (see page 15-99). ■

NO—Go to step 11.

11. Turn the ignition switch to LOCK (0), then turn the ignition switch to ON (II).

12. Measure the voltage between SH-AWD control unit connector terminals A2 and A13, then rotate the propeller shaft.

SH-AWD CONTROL UNIT CONNECTOR A (26P)

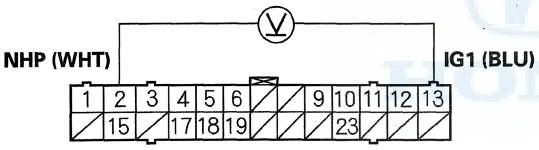

Wire side of female terminals

Does the voltage change?

YES—Substitute a known-good SH-AWD control unit (see page 15-99) and recheck. If the symptom/indication goes away with the known-good SH-AWD control unit, replace the original SH-AWD control unit (see page 15-99). ■

NO—Go to step 13.

13. Turn the ignition switch to LOCK (0).

14. Disconnect the hypoid gear speed sensor 3P connector.

15. Turn the ignition switch to ON (II).

16. Measure the voltage between hypoid gear speed sensor 3P connector terminals No. 1 and No. 3.

HYPOID GEAR SPEED SENSOR 3P CONNECTOR

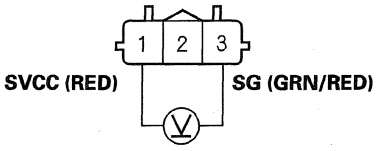

Wire side of female terminals

Is there 4.0 V or more?

YES—Go to step 25.

NO—Go to step 17.

17. Turn the ignition switch to LOCK (0).

18. Disconnect SH-AWD control unit connector A (26P).

19. Connect hypoid gear speed sensor 3P connector terminal No. 1 to body ground with a jumper wire.

HYPOID GEAR SPEED SENSOR 3P CONNECTOR

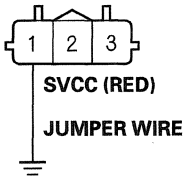

Wire side of female terminals

(cont'd)

DTC Troubleshooting (cont'd)

20. Check for continuity between SH-AWD control unit connector terminal A18 and body ground.

SH-AWD CONTROL UNIT CONNECTOR A (26P)

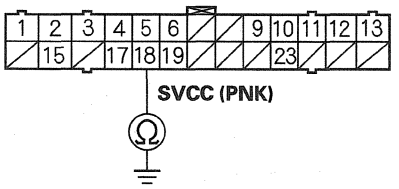

Wire side of female terminals

Is there continuity?

YES—Go to step 21.

NO—Repair an open in the wire between SH-AWD control unit connector A and the hypoid gear speed sensor 3P connector. ■

21. Remove the jumper wire from hypoid gear speed sensor 3P connector terminal No. 1.

22. Check for continuity between SH-AWD control unit connector terminal A18 and body ground.

SH-AWD CONTROL UNIT CONNECTOR A (26P)

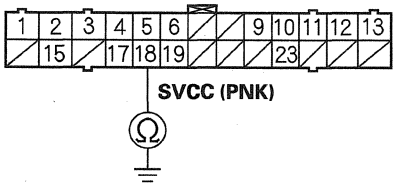

Wire side of female terminals

Is there continuity?

YES—Repair a short to body ground in the wire between SH-AWD control unit connector A and the hypoid gear speed sensor 3P connector. ■

NO—Go to step 23.

23. Connect hypoid gear speed sensor 3P connector terminal No. 3 to body ground with a jumper wire.

HYPOID GEAR SPEED SENSOR 3P CONNECTOR

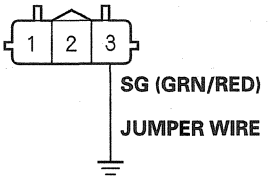

Wire side of female terminals

24. Check for continuity between SH-AWD control unit connector terminal A5 and body ground.

SH-AWD CONTROL UNIT CONNECTOR A (26P)

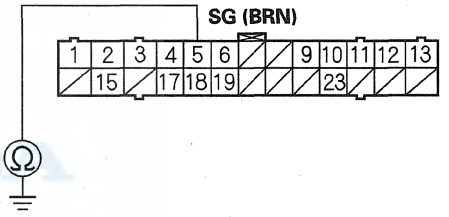

Wire side of female terminals

Is there continuity?

YES—Substitute a known-good SH-AWD control unit (see page 15-99) and recheck. If the symptom/indication goes away with the known-good SH-AWD control unit, replace the original SH-AWD control unit (see page 15-99). ■

NO—Repair an open in the wire between SH-AWD control unit connector A and the hypoid gear speed sensor 3P connector. ■

25. Turn the ignition switch to LOCK (0).

26. Disconnect SH-AWD control unit connector A (26P).

27. Connect hypoid gear speed sensor 3P connector terminal No. 2 to body ground with a jumper wire.

HYPOID GEAR SPEED SENSOR 3P CONNECTOR

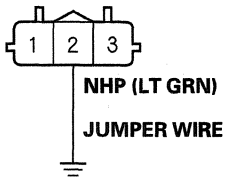

Wire side of female terminals

28. Check for continuity between SH-AWD control unit connector terminal A2 and body ground.

SH-AWD CONTROL UNIT CONNECTOR A (26P)

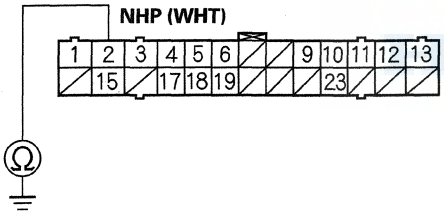

Wire side of female terminals

Is there continuity?

YES—Go to step 29.

NO—Repair an open in the wire between SH-AWD control unit connector A and the hypoid gear speed sensor 3P connector. ■

29. Remove the jumper wire from hypoid gear speed sensor 3P connector terminal No. 2.

30. Check for continuity between SH-AWD control unit connector terminal A2 and body ground.

SH-AWD CONTROL UNIT CONNECTOR A (26P)

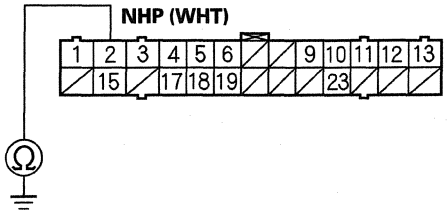

Wire side of female terminals

Is there continuity?

YES—Repair a short to body ground in the wire between SH-AWD control unit connector A and the hypoid gear speed sensor 3P connector. ■

NO—Replace the hypoid gear speed sensor (see page 15-98). ■

DTC Troubleshooting (cont'd)

DTC 27-2: Hypoid Gear Speed Sensor Malfunction

NOTE: Before you troubleshoot, review the general troubleshooting information (see page 15-4).

1. Turn the ignition switch to ON (II).
2. Clear the DTC with the HDS.
3. Turn the ignition switch to LOCK (0).
4. Raise the vehicle on a lift, make sure it is securely supported, and allow all four wheels to rotate freely.
5. Start the engine.
6. Turn the VSA off (the VSA OFF lamp in the gauge control module turns on). Run the engine in D until the vehicle speed reaches 19 mph (30 km/h) and maintain the speed for 1 minute, then slow down and stop the wheels.
7. Check for DTCs with the HDS.

   Is DTC 27-2 indicated?

   YES—Go to step 8.

   NO—Intermittent failure, the system is OK at this time. ■

8. Check for DTCs in the VSA system with the HDS.

   Are any VSA System DTCs indicated?

   YES—Go to the indicated DTC's troubleshooting. ■

   NO—Go to step 9.

9. Run the engine in D until the vehicle speed reaches 19 mph (30 km/h) and maintain the speed.
10. Check the HYPOID GEAR SPEED SENSOR VALUE in the DATA LIST with the HDS.

    Is a hypoid gear speed sensor value shown?

    YES—Substitute a known-good SH-AWD control unit (see page 15-99) and recheck. If the symptom/indication goes away with the known-good SH-AWD control unit, replace the original SH-AWD control unit (see page 15-99). ■

    NO—Go to step 11.

11. Turn the ignition switch to LOCK (0).
12. Disconnect the hypoid gear speed sensor 3P connector.
13. Turn the ignition switch to ON (II).
14. Measure the voltage between hypoid gear speed sensor 3P connector terminals No. 1 and No. 3.

HYPOID GEAR SPEED SENSOR 3P CONNECTOR

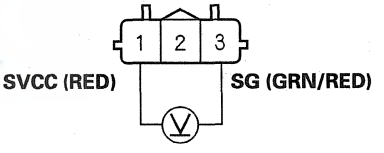

Wire side of female terminals

Is there 4.0 V or more for at least 30 seconds?

YES—Go to step 15.

NO—Go to step 19.

15. Turn the ignition switch to LOCK (0).

16. Disconnect SH-AWD control unit connector A (26P).

17. Connect hypoid gear speed sensor 3P connector terminal No. 2 to body ground with a jumper wire.

HYPOID GEAR SPEED SENSOR 3P CONNECTOR

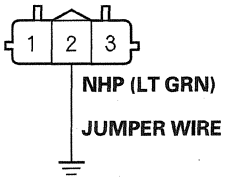

Wire side of female terminals

18. Check for continuity between SH-AWD control unit connector terminal A2 and body ground.

SH-AWD CONTROL UNIT CONNECTOR A (26P)

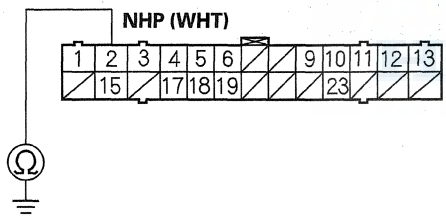

Wire side of female terminals

Is there continuity?

YES—Replace the hypoid gear speed sensor (see page 15-98). ■

NO—Repair an open in the wire between SH-AWD control unit connector A and the hypoid gear speed sensor 3P connector. ■

19. Turn the ignition switch to LOCK (0).

20. Disconnect SH-AWD control unit connector A (26P).

21. Connect hypoid gear speed sensor 3P connector terminal No. 1 to body ground with a jumper wire.

HYPOID GEAR SPEED SENSOR 3P CONNECTOR

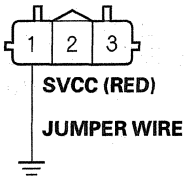

Wire side of female terminals

22. Check for continuity between SH-AWD control unit connector terminal A18 and body ground.

SH-AWD CONTROL UNIT CONNECTOR A (26P)

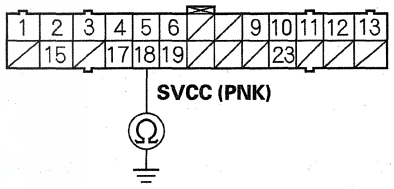

Wire side of female terminals

Is there continuity?

YES—Go to step 23.

NO—Repair an open in the wire between SH-AWD control unit connector A and the hypoid gear speed sensor 3P connector. ■

23. Remove the jumper wire from hypoid gear speed sensor 3P connector terminal No. 1.

(cont'd)

DTC Troubleshooting (cont'd)

24. Check for continuity between SH-AWD control unit connector terminal A18 and body ground.

SH-AWD CONTROL UNIT CONNECTOR A (26P)

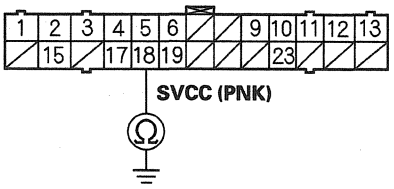

Wire side of female terminals

Is there continuity?

YES—Repair a short to body ground in the wire between SH-AWD control unit connector A and the hypoid gear speed sensor 3P connector. ■

NO—Go to step 25.

25. Connect hypoid gear speed sensor 3P connector terminal No. 3 to body ground with a jumper wire.

HYPOID GEAR SPEED SENSOR 3P CONNECTOR

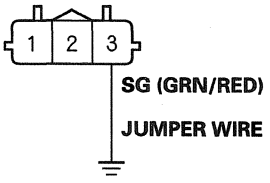

Wire side of female terminals

26. Check for continuity between SH-AWD control unit connector terminal A5 and body ground.

SH-AWD CONTROL UNIT CONNECTOR A (26P)

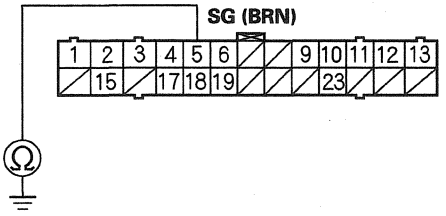

Wire side of female terminals

Is there continuity?

YES—Substitute a known-good SH-AWD control unit (see page 15-99) and recheck. If the symptom/indication goes away with the known-good SH-AWD control unit, replace the original SH-AWD control unit (see page 15-99). ■

NO—Repair an open in the wire between SH-AWD control unit connector A and the hypoid gear speed sensor 3P connector. ■

DTC 33-1, 33-2, 33-3: Yaw Rate Sensor Malfunction

NOTE: Before you troubleshoot, review the general troubleshooting information (see page 15-4).

1. Turn the ignition switch to ON (II).
2. Check for DTCs in the VSA system with the HDS.

   Are any yaw rate sensor DTCs indicated?

   YES—Go to the indicated DTC's troubleshooting. ■

   NO—Go to step 3.
3. Park the vehicle on a level surface.
4. Compare the VOLTAGE OF YAW RATE SENSOR and YAW RATE SENSOR NEUTRAL POSITION DATA in the DATA LIST with the HDS.

   Is the difference between the two within 0.1 V?

   YES—Replace the yaw rate-lateral/longitudinal acceleration sensor (see page 19-103). ■

   NO—Do the yaw rate-lateral/longitudinal acceleration neutral position memorization (see page 15-7). ■

DTC 35-1, 35-2: Yaw Rate Sensor Neutral Position Incorrect

NOTE: Before you troubleshoot, review the general troubleshooting information (see page 15-4).

1. Turn the ignition switch to ON (II).
2. Clear the DTC with the HDS.
3. Start the engine.
4. Check for DTCs with the HDS.

   Is DTC 35-1 and/or 35-2 indicated?

   YES—Go to step 5.

   NO—Intermittent failure, the system is OK at this time. ■
5. Park the vehicle on a level surface.
6. Check the VOLTAGE OF YAW RATE SENSOR in the DATA LIST with the HDS.

   Is there 2.2—2.8 V?

   YES—Go to step 7.

   NO—Check for installation of the yaw rate-lateral/longitudinal acceleration sensor (see page 19-103). ■
7. Check for yaw rate-lateral/longitudinal acceleration neutral position memorization with the HDS.

   Is the yaw rate-lateral/longitudinal acceleration neutral position memorization completed?

   YES—Substitute a known-good SH-AWD control unit (see page 15-99) and recheck. If the symptom/indication goes away with the known-good SH-AWD control unit, replace the original SH-AWD control unit (see page 15-99). ■

   NO—Do the yaw rate-lateral/longitudinal acceleration neutral position memorization (see page 15-7). ■

DTC Troubleshooting (cont'd)

DTC 41-1: F-CAN Malfunction (Lost Communication with Powertrain Control Module (PCM))

NOTE: Before you troubleshoot, review the general troubleshooting information (see page 15-4).

1. Turn the ignition switch to ON (II).
2. Check for DTCs in the PGM-FI system with the HDS.

   Are there any PGM-FI DTCs indicated?

   YES—Go to the indicated DTC's troubleshooting. ■

   NO—Go to step 3.
3. Clear the DTC with the HDS.
4. Start the engine.
5. Check for DTCs with the HDS.

   Is DTC 41-1 indicated?

   YES—Go to step 6.

   NO—Intermittent failure, the system is OK at this time. Check for intermittent open between SH-AWD control unit connector terminals A10 and A11 and PCM connector terminals E15 and E26. ■
6. Turn the ignition switch to LOCK (0).
7. Jump the SCS line with the HDS.

   NOTE: This step must be done to prevent PCM damage.
8. Disconnect PCM connector E (31P).
9. Disconnect SH-AWD control unit connector A (26P).
10. Check for continuity between PCM connector terminals E15, E26 and SH-AWD control unit connector terminals A10, A11 individually.

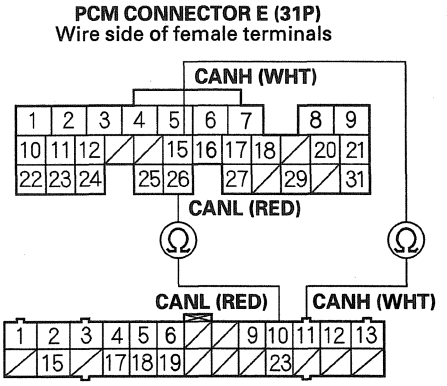

Is there continuity?

YES—Substitute a known-good SH-AWD control unit (see page 15-99) and recheck. If the symptom/indication goes away with the known-good SH-AWD control unit, replace the original SH-AWD control unit (see page 15-99). ■

NO—Repair an open in the wires between the SH-AWD control unit and the PCM. ■

DTC 41-2: F-CAN Malfunction (Lost Communication with VSA Modulator-Control Unit)

NOTE: Before you troubleshoot, review the general troubleshooting information (see page 15-4).

1. Turn the ignition switch to ON (II).
2. Check for DTCs in the VSA system with the HDS.

   Are there any DTCs indicated?

   YES—Go to the indicated DTC's troubleshooting. ■

   NO—Go to step 3.
3. Clear the DTC with the HDS.
4. Start the engine.
5. Check for DTCs with the HDS.

   Is DTC 41-2 indicated?

   YES—Go to step 6.

   NO—Intermittent failure, the system is OK at this time. Check for intermittent open between SH-AWD control unit connector terminals A10 and A11 and VSA modulator-control unit 47P connector terminals No. 14 and No. 30. ■
6. Turn the ignition switch to LOCK (0).
7. Disconnect the VSA modulator-control unit 47P connector.
8. Disconnect SH-AWD control unit connector A (26P).
9. Check for continuity between VSA modulator-control unit 47P connector terminals No. 14, No. 30 and SH-AWD control unit connector terminals A10, A11 individually.

VSA MODULATOR-CONTROL UNIT 47P CONNECTOR
Wire side of female terminals

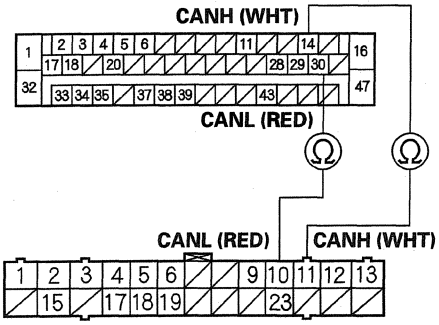

SH-AWD CONTROL UNIT CONNECTOR A (26P)
Wire side of female terminals

Is there continuity?

YES—Substitute a known-good SH-AWD control unit (see page 15-99) and recheck. If the symptom/indication goes away with the known-good SH-AWD control unit, replace the original SH-AWD control unit (see page 15-99). ■

NO—Repair an open in the wires between the SH-AWD control unit and the VSA modulator-control unit. ■

DTC Troubleshooting (cont'd)

DTC 41-3: F-CAN Malfunction (Lost Communication with Gauge Control Module)

NOTE: Before you troubleshoot, review the general troubleshooting information (see page 15-4).

1. Turn the ignition switch to ON (II).
2. Check for DTCs in the gauge control system with the HDS.

   Are there any DTCs indicated?

   YES—Go to the indicated DTC's troubleshooting. ■

   NO—Go to step 3.
3. Clear the DTC with the HDS.
4. Start the engine.
5. Check for DTCs with the HDS.

   Is DTC 41-3 indicated?

   YES—Go to step 6.

   NO—Intermittent failure, the system is OK at this time. Check for intermittent open between SH-AWD control unit connector terminals A10 and A11 and gauge control module connector terminals B15 and B16. ■
6. Turn the ignition switch to LOCK (0).
7. Disconnect gauge control module connector B (28P).
8. Disconnect SH-AWD control unit connector A (26P).
9. Check for continuity between gauge control module connector terminals B15, B16 and SH-AWD control unit connector terminals A10, A11 individually.

GAUGE CONTROL MODULE CONNECTOR B (28P)
Wire side of female terminals

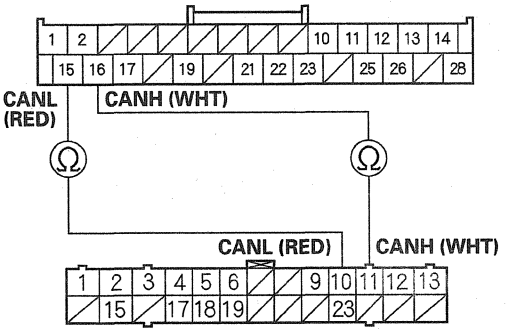

SH-AWD CONTROL UNIT CONNECTOR A (26P)
Wire side of female terminals

Is there continuity?

YES—Substitute a known-good SH-AWD control unit (see page 15-99) and recheck. If the symptom/indication goes away with the known-good SH-AWD control unit, replace the original SH-AWD control unit (see page 15-99). ■

NO—Repair an open in the wires between the SH-AWD control unit and the gauge control module. ■

DTC 41-6: F-CAN Malfunction (Lost Communication with Steering Angle Sensor)

NOTE: Before you troubleshoot, review the general troubleshooting information (see page 15-4).

1. Turn the ignition switch to ON (II).
2. Check for DTCs in the VSA system with the HDS.

   Are any steering angle sensor DTCs of F-CAN indicated?

   YES—Go to the indicated DTC's troubleshooting. ■

   NO—Go to step 3.
3. Clear the DTC with the HDS.
4. Start the engine.
5. Check for DTCs with the HDS.

   Is DTC 41-6 indicated?

   YES—Go to step 6.

   NO—Intermittent failure, the system is OK at this time. ■
6. Turn the ignition switch to LOCK (0).
7. Disconnect the steering angle sensor 5P connector.
8. Disconnect SH-AWD control unit connector A (26P).
9. Check for continuity between steering angle sensor 5P connector terminals No.2, No. 4 and SH-AWD control unit connector terminals A10, A11 individually.

STEERING ANGLE SENSOR 5P CONNECTOR
Wire side of female terminals

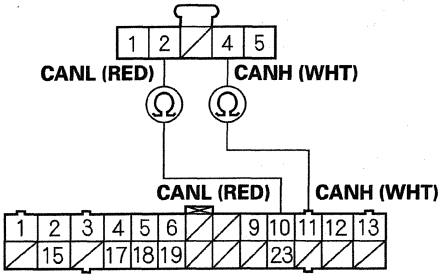

SH-AWD CONTROL UNIT CONNECTOR A (26P)
Wire side of female terminals

Is there continuity?

YES—Substitute a known-good SH-AWD control unit (see page 15-99) and recheck. If the symptom/indication goes away with the known-good SH-AWD control unit, replace the original SH-AWD control unit (see page 15-99). ■

NO—Repair an open in the wires between the SH-AWD control unit and the steering angle sensor. ■

DTC Troubleshooting (cont'd)

DTC 42-1: Differential Fluid Temperature Sensor (Short to Power)

NOTE:
- Before you troubleshoot, review the general troubleshooting information (see page 15-4).
- If the vehicle was driven prior to this troubleshooting procedure, allow the rear differential to cool for more than an hour before continuing.

1. Turn the ignition switch to ON (II).
2. Clear the DTC with the HDS.
3. Turn the ignition switch to LOCK (0), then turn the ignition switch to ON (II).
4. Check for DTCs with the HDS.

   Is DTC 42-1 indicated?

   YES—Go to step 5.

   NO—Intermittent failure, the system is OK at this time. ■
5. Turn the ignition switch to LOCK (0).
6. Disconnect the rear differential fluid temperature sensor 2P connector and SH-AWD control unit connector A (26P).
7. Check for continuity between rear differential fluid temperature sensor 2P connector terminals No. 1 and No. 2.

REAR DIFFERENTIAL FLUID TEMPERATURE SENSOR 2P CONNECTOR

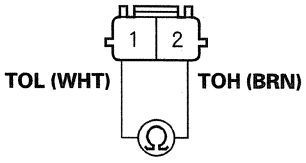

Wire side of female terminals

Is there continuity?

YES—Repair a short in the wire between rear differential fluid temperature sensor 2P connector terminals No. 1 and No. 2. ■

NO—Go to step 8.

8. Connect the rear differential fluid temperature sensor 2P connector.
9. Measure the differential housing temperature with an infrared temperature gauge near the mounting location of the rear differential fluid temperature sensor. The temperature should be below 176 °F (80 °C) before proceeding to the next step.
10. Measure the resistance between SH-AWD control unit connector terminals A9 and A23.

SH-AWD CONTROL UNIT CONNECTOR A (26P)

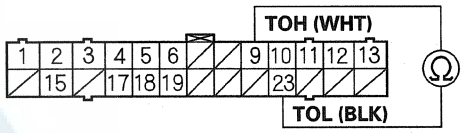

Wire side of female terminals

Is there 260 Ω or more?

YES—Substitute a known-good SH-AWD control unit (see page 15-99) and recheck. If the symptom/indication goes away with the known-good SH-AWD control unit, replace the original SH-AWD control unit (see page 15-99). ■

NO—Replace the rear differential fluid temperature sensor (see page 15-98). ■

DTC 42-2: Differential Fluid Temperature Sensor (Open/GND Short)

NOTE: Before you troubleshoot, review the general troubleshooting information (see page 15-4).

1. Turn the ignition switch to ON (II).
2. Clear the DTC with the HDS.
3. Raise the vehicle on a lift, make sure it is securely supported, and allow all four wheels to rotate freely.
4. Start the engine and turn the VSA off (the VSA OFF lamp in the gauge control module turn on). Run the engine in D until the vehicle speed reaches 35 mph (56 km/h) and maintain the speed for 10 minutes, then slow down and stop the wheels.
5. Check for DTCs with the HDS.

   Is DTC 42-2 indicated?

   YES—Go to step 6.

   NO—Intermittent failure, the system is OK at this time. ■
6. Turn the ignition switch to LOCK (0).
7. Disconnect SH-AWD control unit connector A (26P).
8. Connect SH-AWD control unit connector terminal A9 to body ground with a jumper wire.

SH-AWD CONTROL UNIT CONNECTOR A (26P)

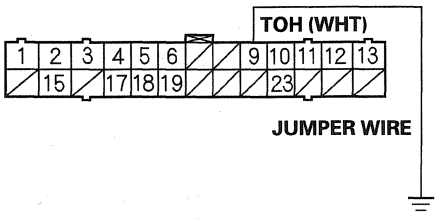

Wire side of female terminals

9. Disconnect the rear differential fluid temperature sensor 2P connector.
10. Check for continuity between rear differential fluid temperature sensor 2P connector terminal No. 2 and body ground.

REAR DIFFERENTIAL OIL TEMPERATURE SENSOR 2P CONNECTOR

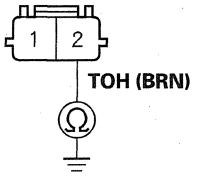

Wire side of female terminals

Is there continuity?

YES—Go to step 11.

NO—Repair an open in the wire between SH-AWD control unit connector A and the rear differential fluid temperature sensor 2P connector. ■

11. Remove the jumper wire from SH-AWD control unit connector terminal A9.

(cont'd)

DTC Troubleshooting (cont'd)

12. Connect SH-AWD control unit connector terminal A23 to body ground with a jumper wire.

SH-AWD CONTROL UNIT CONNECTOR A (26P)

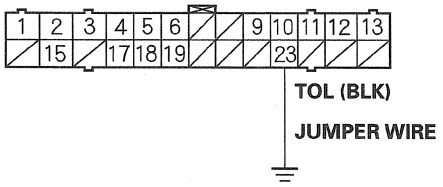

Wire side of female terminals

13. Check for continuity between rear differential fluid temperature sensor 2P connector terminal No. 1 and body ground.

REAR DIFFERENTIAL FLUID TEMPERATURE SENSOR 2P CONNECTOR

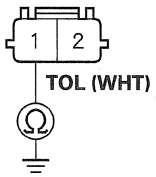

Wire side of female terminals

Is there continuity?

YES—Go to step 14.

NO—Repair an open in the wire between SH-AWD control unit connector A and the rear differential fluid temperature sensor 2P connector. ■

14. Remove the jumper wire from SH-AWD control unit connector terminal A23.

15. Check for continuity between SH-AWD control unit connector terminals A9 and A12.

SH-AWD CONTROL UNIT CONNECTOR A (26P)

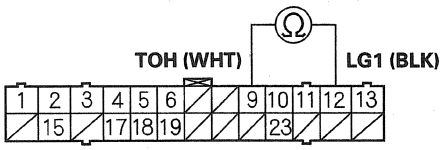

Wire side of female terminals

Is there continuity?

YES—Repair a short in the wire between SH-AWD control unit connector A and the rear differential fluid temperature sensor 2P connector. ■

NO—Go to step 16.

16. Check for continuity between SH-AWD control unit connector terminals A12 and A23.

SH-AWD CONTROL UNIT CONNECTOR A (26P)

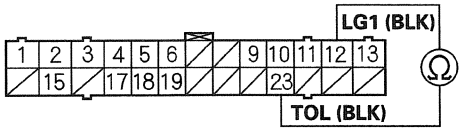

Wire side of female terminals

Is there continuity?

YES—Repair a short in the wire between SH-AWD control unit connector A and the rear differential fluid temperature sensor 2P connector. ■

NO—Go to step 17.

17. Reconnect the rear differential fluid temperature sensor 2P connector.

18. Measure the resistance between SH-AWD control unit connector terminals A9 and A23.

SH-AWD CONTROL UNIT CONNECTOR A (26P)

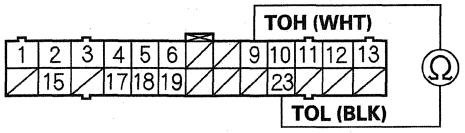

Wire side of female terminals

Is there 12.67 kΩ or less?

YES—Substitute a known-good SH-AWD control unit (see page 15-99) and recheck. If the symptom/indication goes away with the known-good SH-AWD control unit, replace the original SH-AWD control unit (see page 15-99). ■

NO—Replace the rear differential fluid temperature sensor (see page 15-98). ■

DTC Troubleshooting (cont'd)

DTC 43-1: Differential Fluid Temperature Sensor Circuit Malfunction

NOTE: Before you troubleshoot, review the general troubleshooting information (see page 15-4).

1. Turn the ignition switch to ON (II).
2. Check for DTCs with the HDS.

   Is DTC 42-1 or 42-2 indicated?

   YES—Go to the indicated DTC's troubleshooting. ■

   NO—Go to step 3.
3. Clear the DTC with the HDS.
4. Start the engine.
5. Let the engine idle 1 minute.
6. Test-drive the vehicle for 5 minutes.
7. Check for DTCs with the HDS.

   Is DTC 43-1 indicated?

   YES—Go to step 8.

   NO—Intermittent failure, the system is OK at this time. ■
8. Turn the ignition switch to LOCK (0).
9. Disconnect SH-AWD control unit connector A (26P).
10. Disconnect the rear differential fluid temperature sensor 2P connector.
11. Check for continuity between rear differential fluid temperature sensor 2P connector terminals No. 1 and No. 2.

REAR DIFFERENTIAL FLUID TEMPERATURE SENSOR 2P CONNECTOR

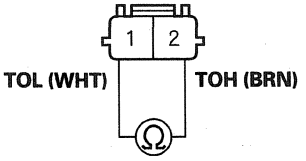

Wire side of female terminals

Is there continuity?

YES—Repair a short in the wire between rear differential fluid temperature sensor 2P connector terminals No. 1 and No. 2. ■

NO—Go to step 12.

12. Reconnect all connectors.
13. Substitute a known-good SH-AWD control unit (see page 15-99).
14. Start the engine.
15. Let the engine idle 1 minute.
16. Check for DTCs with the HDS.

    Is DTC 43-1 indicated?

    YES—Replace the rear differential fluid temperature sensor (see page 15-98). ■

    NO—Replace the original SH-AWD control unit (see page 15-99). ■

DTC 44-11: SH-AWD Control Unit

NOTE: Before you troubleshoot, review the general troubleshooting information (see page 15-4).

1. Turn the ignition switch to ON (II).
2. Clear the DTC with the HDS.
3. Turn the ignition switch to LOCK (0), then turn the ignition switch to ON (II).
4. Check for DTCs with the HDS.

   Is DTC 44-11 indicated?

   YES—Substitute a known-good SH-AWD control unit (see page 15-99) and recheck. If the symptom/indication goes away with the known-good SH-AWD control unit, replace the original SH-AWD control unit (see page 15-99).■

   NO—Intermittent failure, the system is OK at this time.■

DTC Troubleshooting (cont'd)

DTC 44-12: SH-AWD Relay Stuck ON

NOTE: Before you troubleshoot, review the general troubleshooting information (see page 15-4).

1. Turn the ignition switch to ON (II).
2. Clear the DTC with the HDS.
3. Start the engine.
4. Check for DTCs with the HDS.

   Is DTC 44-12 indicated?

   YES—Go to step 5.

   NO—Intermittent failure, the system is OK at this time. ■
5. Turn the ignition switch to LOCK (0).
6. Remove the SH-AWD relay (see page 15-99), then test the SH-AWD relay (see page 22-93). ■

   Is the SH-AWD relay OK?

   YES—Go to step 7.

   NO—Replace the SH-AWD relay (see page 15-99). ■
7. Disconnect SH-AWD control unit connector A (26P).
8. Turn the ignition switch to ON (II).
9. Measure the voltage between SH-AWD control unit connector terminal A3 and body ground.

SH-AWD CONTROL UNIT CONNECTOR A (26P)

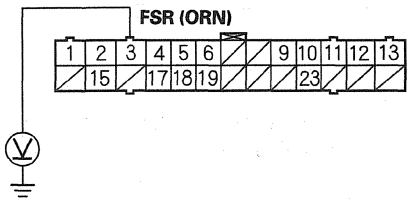

Wire side of female terminals

Is there battery voltage?

YES—Repair a short to power in the wire between the SH-AWD control unit and the SH-AWD relay (FSR line). ■

NO—Go to step 10.

10. Disconnect SH-AWD control unit connector B (8P).
11. Measure the voltage between SH-AWD control unit connector terminals B1 and B2.

SH-AWD CONTROL UNIT CONNECTOR B (8P)

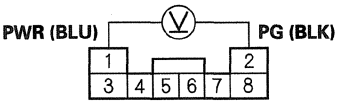

Wire side of female terminals

Is there battery voltage?

YES—Repair a short to power in the wire between the SH-AWD control unit and the SH-AWD relay (PWR line). ■

NO—Substitute a known-good SH-AWD control unit (see page 15-99) and recheck. If the symptom/indication goes away with the known-good SH-AWD control unit, replace the original SH-AWD control unit (see page 15-99). ■

DTC 44-21: SH-AWD Control Unit

NOTE: Before you troubleshoot, review the general troubleshooting information (see page 15-4).

1. Turn the ignition switch to ON (II).
2. Clear the DTC with the HDS.
3. Turn the ignition switch to LOCK (0), then turn the ignition switch to ON (II).
4. Check for DTCs with the HDS.

   Is DTC 44-21 indicated?

   YES—Substitute a known-good SH-AWD control unit (see page 15-99) and recheck. If the symptom/indication goes away with the known-good SH-AWD control unit, replace the original SH-AWD control unit (see page 15-99). ■

   NO—Intermittent failure, the system is OK at this time. ■

DTC 44-31: SH-AWD Relay Stuck OFF

NOTE:
- Before you troubleshoot, review the general troubleshooting information (see page 15-4).
- Make sure the battery is fully charged and the charging system is working properly.

1. Check these fuses:
   - No. 22 (AS F/B) (70 A) fuse in the under-hood fuse/relay box.
   - No. 1 (30 A) fuse in the passenger's under-hood fuse/relay box.

   Are the fuses OK?

   YES—Go to step 2.

   NO—Replace the blown fuses and recheck. If the No. 22 (70 A) and No. 1 (30 A) fuses blows again, repair a short to ground in the wire between the fuse and the SH-AWD relay, then replace the fuse and recheck. ■
2. Turn the ignition switch to ON (II).
3. Clear the DTC with the HDS.
4. Start the engine.
5. Check for DTCs with the HDS.

   Is DTC 44-31 indicated?

   YES—Go to step 6.

   NO—Intermittent failure, the system is OK at this time. ■
6. Turn the ignition switch to LOCK (0).

(cont'd)

DTC Troubleshooting (cont'd)

7. Remove the SH-AWD relay (see page 15-99), then test the SH-AWD relay (see page 22-93).

   Is the SH-AWD relay OK?

   YES—Go to step 8.

   NO—Replace the SH-AWD relay (see page 15-99). ■

8. Disconnect SH-AWD control unit connector B (8P).

9. Check for continuity between SH-AWD relay 4P connector terminal No. 1 and SH-AWD control unit connector terminal B1.

SH-AWD RELAY 4P CONNECTOR
Wire side of female terminals

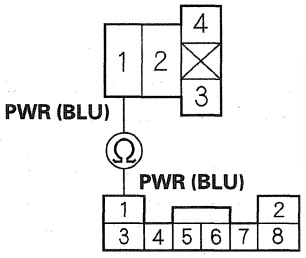

SH-AWD CONTROL UNIT CONNECTOR B (8P)
Wire side of female terminals

Is there continuity?

YES—Go to step 10.

NO—Repair an open in the wire between SH-AWD control unit connector A and the SH-AWD relay. ■

10. Check for continuity between SH-AWD relay 4P connector terminal No. 4 and SH-AWD control unit connector terminal A3.

SH-AWD RELAY 4P CONNECTOR
Wire side of female terminals

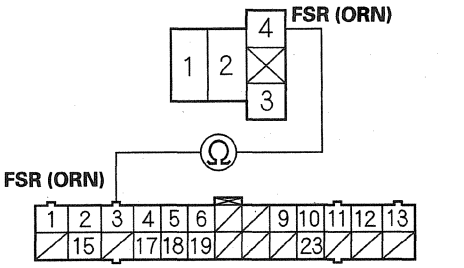

SH-AWD CONTROL UNIT CONNECTOR A (26P)
Wire side of female terminals

Is there continuity?

YES—Go to step 11.

NO—Repair an open in the wire between SH-AWD control unit connector A and the SH-AWD relay. ■

11. Check for continuity between SH-AWD relay 4P connector terminal No. 3 and body ground.

SH-AWD RELAY 4P CONNECTOR

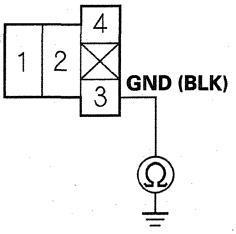

Wire side of female terminals

Is there continuity?

YES—Go to step 12.

NO—Repair an open in the wire between the SH-AWD relay and body ground (G652). ■

12. Measure the voltage between SH-AWD relay 4P connector terminal No. 2 and body ground.

SH-AWD RELAY 4P CONNECTOR

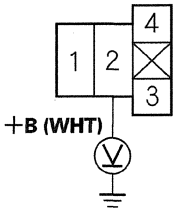

Wire side of female terminals

Is there battery voltage?

YES—Go to step 13.

NO—Repair an open in the wire between the No. 1 fuse in the passenger's under-dash fuse/relay box and the SH-AWD relay. ■

13. Check for continuity between SH-AWD relay 4P connector terminals No. 1 and No. 4 to body ground.

SH-AWD RELAY 4P CONNECTOR

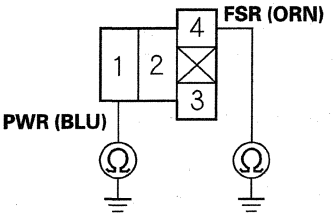

Wire side of female terminals

Is there voltage?

YES—Repair a short in the wire between the SH-AWD relay and body ground. ■

NO—Check for loose connector terminals at the SH-AWD control unit. If the connections are OK, substitute a known-good SH-AWD control unit (see page 15-99) and recheck. If the symptom/indication goes away with the known-good SH-AWD control unit, replace the original SH-AWD control unit (see page 15-99). ■

DTC Troubleshooting (cont'd)

DTC 44-32: SH-AWD Control Unit Power Supply Stuck ON

NOTE: Before you troubleshoot, review the general troubleshooting information (see page 15-4).

1. Turn the ignition switch to ON (II).
2. Clear the DTC with the HDS.
3. Start the engine.
4. Check for DTCs with the HDS.

   Is DTC 44-32 indicated?

   YES—Substitute a known-good SH-AWD control unit (see page 15-99) and recheck. If the symptom/indication goes away with the known-good SH-AWD control unit, replace the original SH-AWD control unit (see page 15-99).■

   NO—Intermittent failure, the system is OK at this time.■

DTC 44-41: SH-AWD Control Unit Power Supply Stuck OFF

NOTE: Before you troubleshoot, review the general troubleshooting information (see page 15-4).

1. Turn the ignition switch to ON (II).
2. Clear the DTC with the HDS.
3. Start the engine.
4. Check for DTCs with the HDS.

   Is DTC 44-41 indicated?

   YES—Substitute a known-good SH-AWD control unit (see page 15-99) and recheck. If the symptom/indication goes away with the known-good SH-AWD control unit, replace the original SH-AWD control unit (see page 15-99).■

   NO—Intermittent failure, the system is OK at this time.■

DTC 44-50: SH-AWD Control Unit Power Supply Voltage Low

NOTE:
- Before you troubleshoot, review the general troubleshooting information (see page 15-4).
- Make sure the battery is fully charged and the charging system is working properly.

1. Check these fuses:

   - No. 22 (AS F/B) (70 A) fuse in the under-hood fuse/relay box.
   - No. 1 (30 A) fuse in the passenger's under-hood fuse/relay box.

   Are the fuses OK?

   YES—Go to step 2.

   NO—Replace the blown fuses and recheck. If the No. 22 (70 A) and No. 1 (30 A) fuses blows again, repair a short to ground in the wire between the fuse and the SH-AWD relay, then replace the fuse and recheck. ■

2. Turn the ignition switch to ON (II).
3. Clear the DTC with the HDS.
4. Start the engine.
5. Check for DTCs with the HDS.

   Is DTC 44-50 indicated?

   YES—Go to step 6.

   NO—Intermittent failure, the system is OK at this time. ■

6. Turn the ignition switch to LOCK (0).
7. Remove the SH-AWD relay (see page 15-99), then test the SH-AWD relay (see page 22-93).

   Is the SH-AWD relay OK?

   YES—Go to step 8.

   NO—Replace the SH-AWD relay (see page 15-99). ■

8. Disconnect SH-AWD control unit connector B (8P).
9. Check for continuity between SH-AWD relay 4P connector terminal No. 1 and SH-AWD control unit connector terminal B1.

SH-AWD RELAY 4P CONNECTOR
Wire side of female terminals

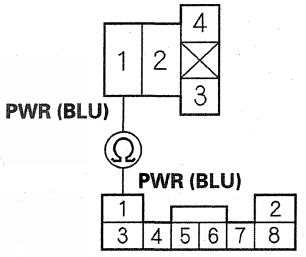

SH-AWD CONTROL UNIT CONNECTOR B (8P)
Wire side of female terminals

Is there continuity?

YES—Go to step 10.

NO—Repair an open in the wire between SH-AWD control unit connector A and the SH-AWD relay. ■

(cont'd)

DTC Troubleshooting (cont'd)

10. Check for continuity between SH-AWD relay 4P connector terminal No. 4 and SH-AWD control unit connector terminal A3.

SH-AWD RELAY 4P CONNECTOR
Wire side of female terminals

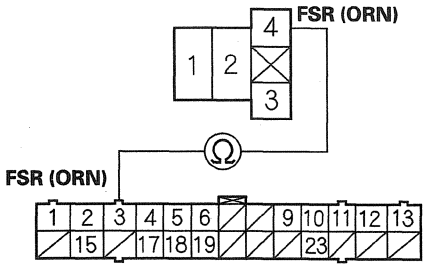

SH-AWD CONTROL UNIT CONNECTOR A (26P)
Wire side of female terminals

Is there continuity?

YES—Go to step 11.

NO—Repair an open in the wire between SH-AWD control unit connector A and the SH-AWD relay. ■

11. Check for continuity between SH-AWD relay 4P connector terminal No. 3 and body ground.

SH-AWD RELAY 4P CONNECTOR

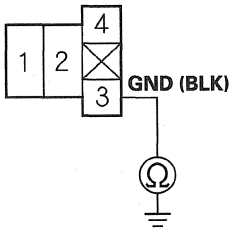

Wire side of female terminals

Is there continuity?

YES—Go to step 12.

NO—Repair an open in the wire between the SH-AWD relay and body ground (G652). ■

12. Measure the voltage between SH-AWD relay 4P connector terminal No. 2 and body ground.

SH-AWD RELAY 4P CONNECTOR

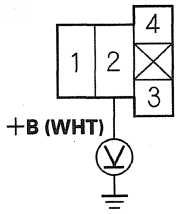

Wire side of female terminals

Is there battery voltage?

YES—Go to step 13.

NO—Repair an open in the wire between No. 1 fuse in the passenger's under-dash fuse/relay box and the SH-AWD relay. ■

13. Check for continuity between SH-AWD relay 4P connector terminals No. 1 and No. 4 to body ground.

SH-AWD RELAY 4P CONNECTOR

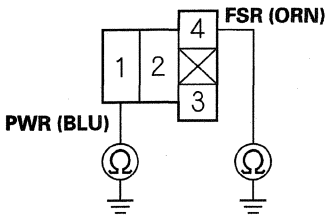

Wire side of female terminals

Is there continuity?

YES—Repair a short in the wire between the SH-AWD relay and body ground. ■

NO—Check for loose connector terminals at the SH-AWD control unit. If the connections are OK, substitute a known-good SH-AWD control unit (see page 15-99) and recheck. If the symptom/indication goes away with the known-good SH-AWD control unit, replace the original SH-AWD control unit (see page 15-99). ■

DTC 46-1: SH-AWD Control Unit Internal Power Supply Circuit (Open or Short)

NOTE: Before you troubleshoot, review the general troubleshooting information (see page 15-4).

1. Turn the ignition switch to ON (II).
2. Clear the DTC with the HDS.
3. Start the engine.
4. Check for DTCs with the HDS.

Is DTC 46-1 indicated?

YES—Substitute a known-good SH-AWD control unit (see page 15-99) and recheck. If the symptom/indication goes away with the known-good SH-AWD control unit, replace the original SH-AWD control unit (see page 15-99). ■

NO—Intermittent failure, the system is OK at this time. ■

DTC Troubleshooting (cont'd)

DTC 52-3: Left Clutch Electromagnetic Coil Current Malfunction

NOTE: Before you troubleshoot, review the general troubleshooting information (see page 15-4).

1. Turn the ignition switch to ON (II).
2. Clear the DTC with the HDS.
3. Do the direct electromagnetic clutch test (see page 15-93).
4. Check for DTCs with the HDS.

   Is DTC 52-3 indicated?

   YES—Go to step 5.

   NO—Intermittent failure, the system is OK at this time. ■
5. Measure the voltage between SH-AWD control unit connector terminal B2 and body ground.

SH-AWD CONTROL UNIT CONNECTOR B (8P)

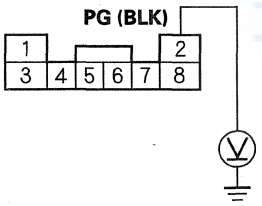

Wire side of female terminals

Is there less than 0.5 V?

YES—Go to step 6.

NO—Repair an open in the wire between SH-AWD control unit connector B and body ground or poor ground (G652). ■

6. Turn the ignition switch to LOCK (0).
7. Disconnect SH-AWD control unit connector B (8P).
8. Disconnect the left clutch electromagnetic coil 2P connector.
9. Connect SH-AWD control unit connector terminals B4 and B5 with a jumper wire.

SH-AWD CONTROL UNIT CONNECTOR B (8P)

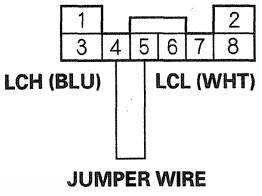

Wire side of female terminals

10. Check for continuity between left clutch electromagnetic coil 2P connector terminals No. 1 and No. 2.

LEFT CLUTCH ELECTROMAGNETIC COIL 2P CONNECTOR

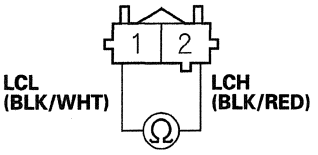

Wire side of female terminals

Is there continuity?

YES—Go to step 11.

NO—Repair an open in the wire between the SH-AWD control unit and the left clutch electromagnetic coil. ■

11. Remove the jumper wire from SH-AWD control unit connector terminals B4 and B5.

12. Check for continuity between SH-AWD control unit connector terminals B2 and B4, then check for continuity between SH-AWD control unit connector terminals B2 and B5.

SH-AWD CONTROL UNIT CONNECTOR B (8P)

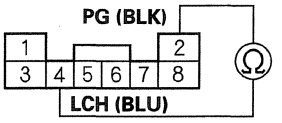

Wire side of female terminals

SH-AWD CONTROL UNIT CONNECTOR B (8P)

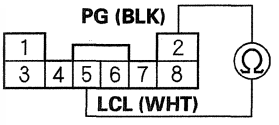

Wire side of female terminals

Is there continuity?

YES—Repair a short to ground or short to the ground wire between the SH-AWD control unit and the left clutch electromagnetic coil. ■

NO—Go to step 13.

(cont'd)

DTC Troubleshooting (cont'd)

13. Check for continuity between SH-AWD control unit connector terminals B4 and B5.

SH-AWD CONTROL UNIT CONNECTOR B (8P)

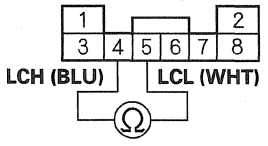

Wire side of female terminals

Is there continuity?

YES—Repair a short in the wires between the SH-AWD control unit and the left clutch electromagnetic coil. ■

NO—Go to step 14.

14. Turn the ignition switch to ON (II).

15. Measure the voltage between SH-AWD control unit connector terminals B2 and B4.

SH-AWD CONTROL UNIT CONNECTOR B (8P)

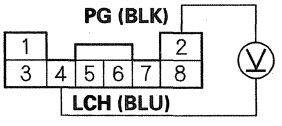

Wire side of female terminals

Is there more than 0.5 V?

YES—Repair a short to power in the wire between the SH-AWD control unit and the left clutch electromagnetic coil. ■

NO—Go to step 16.

16. Measure the voltage between SH-AWD control unit connector terminals B2 and B5.

SH-AWD CONTROL UNIT CONNECTOR B (8P)

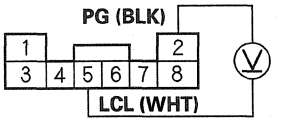

Wire side of female terminals

Is there more than 0.5 V?

YES—Repair a short to power in the wire between the SH-AWD control unit and the left clutch electromagnetic coil. ■

NO—Substitute a known-good SH-AWD control unit (see page 15-99) and recheck. If the symptom/indication goes away with the known-good SH-AWD control unit, replace the rear differential side case (see page 15-99). ■

DTC 53-1, 53-3: Left Clutch Electromagnetic Coil (Open)

NOTE: Before you troubleshoot, review the general troubleshooting information (see page 15-4).

1. Turn the ignition switch to ON (II).
2. Clear the DTC with the HDS.
3. Do the direct electromagnetic clutch test (see page 15-93).
4. Check for DTCs with the HDS.

   Is DTC 53-1 or 53-3 indicated?

   YES—Go to step 5.

   NO—Intermittent failure, the system is OK at this time. ■
5. Turn the ignition switch to LOCK (0).
6. Disconnect SH-AWD control unit connector B (8P).
7. Disconnect the left clutch electromagnetic coil 2P connector.
8. Connect between left clutch electromagnetic coil 2P connector terminal No. 1 to body ground with a jumper wire.

LEFT CLUTCH ELECTROMAGNETIC COIL 2P CONNECTOR

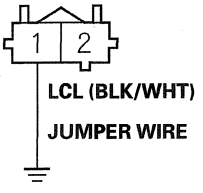

Wire side of female terminals

9. Check for continuity between SH-AWD control unit connector terminal B5 and body ground.

SH-AWD CONTROL UNIT CONNECTOR B (8P)

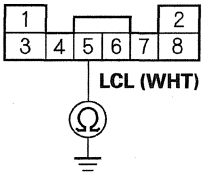

Wire side of female terminals

Is there continuity?

YES—Go to step 10.

NO—Repair an open in the wire between the SH-AWD control unit and the left clutch electromagnetic coil. ■

10. Remove the jumper wire from the left clutch electromagnetic coil 2P connector terminal No. 1.
11. Connect left clutch electromagnetic coil 2P connector terminal No. 2 to body ground with a jumper wire.

LEFT CLUTCH ELECTROMAGNETIC COIL 2P CONNECTOR

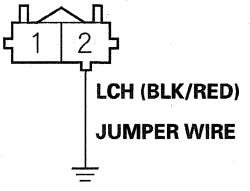

Wire side of female terminals

(cont'd)

DTC Troubleshooting (cont'd)

12. Check for continuity between SH-AWD control unit connector terminal B4 and body ground.

SH-AWD CONTROL UNIT CONNECTOR B (8P)

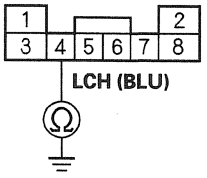

Wire side of female terminals

Is there continuity?

YES—Go to step 13.

NO—Repair an open in the wire between the SH-AWD control unit and the left clutch electromagnetic coil. ■

13. Remove the jumper wire from the left clutch electromagnetic coil 2P connector terminal No. 2.

14. Reconnect all connectors.

15. Turn the ignition switch to ON (II).

16. Check the REAR DIFFERENTIAL FLUID TEMPERATURE in the DATA LIST with the HDS before proceeding to the next step. The temperature should be above 68 °F (20 °C). If the temperature is below 68 °F (20 °C), drive the vehicle to warm up the rear differential until the fluid temperature becomes above 68 °F (20 °C).

17. Turn the ignition switch to LOCK (0).

18. Disconnect the left clutch electromagnetic coil 2P connector.

19. Measure the resistance between left clutch electromagnetic coil 2P connector terminals No. 1 and No. 2.

LEFT CLUTCH ELECTROMAGNETIC COIL 2P CONNECTOR

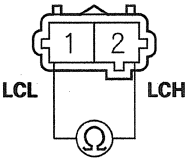

Terminal side of male terminals

Is there 1.5 Ω or more?

YES—Replace the rear differential side case (see page 15-120). ■

NO—Substitute a known-good SH-AWD control unit (see page 15-99) and recheck. If the symptom/indication goes away with the known-good SH-AWD control unit, replace the original SH-AWD control unit (see page 15-99). ■

DTC 53-2, 53-4: Left Clutch Electromagnetic Coil (Short)

NOTE: Before you troubleshoot, review the general troubleshooting information (see page 15-4).

1. Turn the ignition switch to ON (II).
2. Clear the DTC with the HDS.
3. Do the direct electromagnetic clutch test (see page 15-93).
4. Check for DTCs with the HDS.

   Is DTC 53-2 or 53-4 indicated?

   YES—Go to step 5.

   NO—Intermittent failure, the system is OK at this time.■
5. Turn the ignition switch to LOCK (0).
6. Disconnect SH-AWD control unit connector B (8P).
7. Disconnect the left clutch electromagnetic coil 2P connector.
8. Check for continuity between SH-AWD control unit connector terminals B4 and B5.

SH-AWD CONTROL UNIT CONNECTOR B (8P)

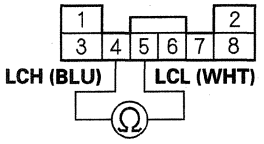

Wire side of female terminals

Is there continuity?

YES—Repair a short in the wires between SH-AWD control unit connector terminals B4 and B5.■

NO—Go to step 9.

(cont'd)

DTC Troubleshooting (cont'd)

9. Turn the ignition switch to ON (II).
10. Measure the voltage between SH-AWD control unit connector terminal B4 and body ground.

SH-AWD CONTROL UNIT CONNECTOR B (8P)

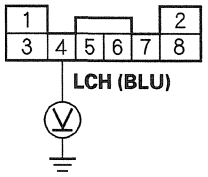

Wire side of female terminals

Is there more than 0.5 V?

YES—Repair a short to power in the wires between SH-AWD control unit connector terminal B4 and the left clutch electromagnetic coil. ■

NO—Go to step 11.

11. Turn the ignition switch to LOCK (0).
12. Reconnect all connectors.
13. Turn the ignition switch to ON (II).
14. Check the REAR DIFFERENTIAL FLUID TEMPERATURE in the DATA LIST with the HDS before proceeding to the next step. The temperature should be above 68 °F (20 °C). If the temperature is below 68 °F (20 °C), drive the vehicle to warm up the rear differential until the fluid temperature becomes above 68 °F (20 °C).
15. Turn the ignition switch to LOCK (0).
16. Disconnect the left clutch electromagnetic coil 2P connector.
17. Measure the resistance between left clutch electromagnetic coil 2P connector terminals No. 1 and No. 2.

LEFT CLUTCH ELECTROMAGNETIC COIL 2P CONNECTOR

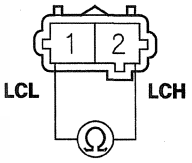

Terminal side of male terminals

Is there 0.45 Ω or less?

YES—Replace the rear differential side case (see page 15-120). ■

NO—Substitute a known-good SH-AWD control unit (see page 15-99) and recheck. If the symptom/indication goes away with the known-good SH-AWD control unit, replace the original SH-AWD control unit (see page 15-99). ■

DTC 56-3: Right Clutch Electromagnetic Coil Current Malfunction

NOTE: Before you troubleshoot, review the general troubleshooting information (see page 15-4).

1. Turn the ignition switch to ON (II).
2. Clear the DTC with the HDS.
3. Do the direct electromagnetic clutch test (see page 15-93).
4. Check for DTCs with the HDS.

   Is DTC 56-3 indicated?

   YES—Go to step 5.

   NO—Intermittent failure, the system is OK at this time. ■

5. Measure the voltage between SH-AWD control unit connector terminal B2 and body ground.

SH-AWD CONTROL UNIT CONNECTOR B (8P)

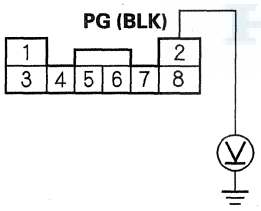

Wire side of female terminals

Is there less than 0.5 V?

YES—Go to step 6.

NO—Repair an open in the wire between SH-AWD control unit connector B and body ground or poor ground (G652). ■

6. Turn the ignition switch to LOCK (0).
7. Disconnect SH-AWD control unit connector B (8P).
8. Disconnect the right clutch electromagnetic coil 2P connector.
9. Connect SH-AWD control unit connector terminals B6 and B7 with a jumper wire.

SH-AWD CONTROL UNIT CONNECTOR B (8P)

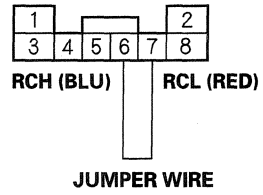

Wire side of female terminals

10. Check for continuity between right electromagnetic coil 2P connector terminals No. 1 and No. 2.

RIGHT CLUTCH ELECTROMAGNETIC COIL 2P CONNECTOR

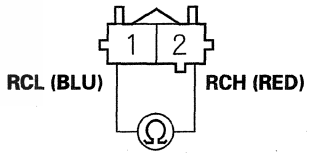

Wire side of female terminals

Is there continuity?

YES—Go to step 11.

NO—Repair an open in the wire between the SH-AWD control unit and the right clutch electromagnetic coil. ■

11. Remove the jumper wire from SH-AWD control unit connector terminals B6 and B7.

(cont'd)

DTC Troubleshooting (cont'd)

12. Check for continuity between SH-AWD control unit connector terminals B2 and B6, then check for continuity between SH-AWD control unit connector terminals B2 and B7.

SH-AWD CONTROL UNIT CONNECTOR B (8P)

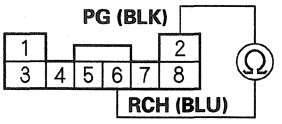

Wire side of female terminals

SH-AWD CONTROL UNIT CONNECTOR B (8P)

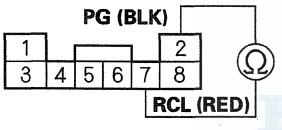

Wire side of female terminals

Is there continuity?

YES—Repair a short to ground or short to the ground wire between the SH-AWD control unit and the right clutch electromagnetic coil. ■

NO—Go to step 13.

13. Check for continuity between SH-AWD control unit connector terminals B6 and B7.

SH-AWD CONTROL UNIT CONNECTOR B (8P)

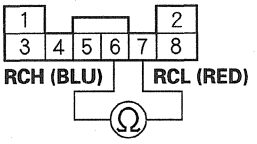

Wire side of female terminals

Is there continuity?

YES—Repair a short in the wires between the SH-AWD control unit and the right clutch electromagnetic coil. ■

NO—Go to step 14.

14. Turn the ignition switch to ON (II).

15. Measure the voltage between SH-AWD control unit connector terminals B2 and B6.

SH-AWD CONTROL UNIT CONNECTOR B (8P)

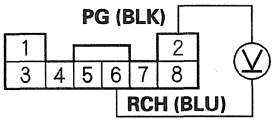

Wire side of female terminals

Is there more than 0.5 V?

YES—Repair a short to power in the wire between SH-AWD control unit and the right clutch electromagnetic coil. ■

NO—Go to step 16.

16. Measure the voltage between SH-AWD control unit connector terminals B2 and B7.

SH-AWD CONTROL UNIT CONNECTOR B (8P)

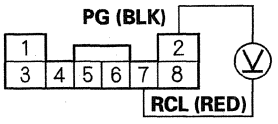

Wire side of female terminals

Is there more than 0.5 V?

YES—Repair a short to power in the wire between the SH-AWD control unit and the right clutch electromagnetic coil. ■

NO—Substitute a known-good SH-AWD control unit (see page 15-99) and recheck. If the symptom/indication goes away with the known-good SH-AWD control unit, replace the original SH-AWD control unit (see page 15-99). ■

HONDA

DTC Troubleshooting (cont'd)

DTC 57-1, 57-3: Right Clutch Electromagnetic Coil (Open)

NOTE: Before you troubleshoot, review the general troubleshooting information (see page 15-4).

1. Turn the ignition switch to ON (II).
2. Clear the DTC with the HDS.
3. Do the direct electromagnetic clutch test (see page 15-93).
4. Check for DTCs with the HDS.

   Is DTC 57-1 or 57-3 indicated?

   YES—Go to step 5.

   NO—Intermittent failure, the system is OK at this time. ■
5. Turn the ignition switch to LOCK (0).
6. Disconnect SH-AWD control unit connector B (8P).
7. Disconnect the right clutch electromagnetic coil 2P connector.
8. Connect right clutch electromagnetic coil 2P connector terminal No. 1 to body ground with a jumper wire.

RIGHT CLUTCH ELECTROMAGNETIC COIL 2P CONNECTOR

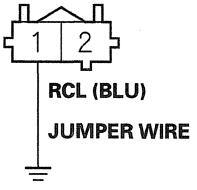

Wire side of female terminals

9. Check for continuity between SH-AWD control unit connector terminal B7 and body ground.

SH-AWD CONTROL UNIT CONNECTOR B (8P)

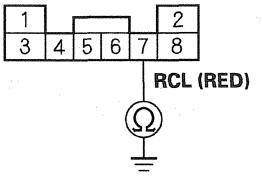

Wire side of female terminals

Is there continuity?

YES—Go to step 10.

NO—Repair an open in the wires between the SH-AWD control unit and the right clutch electromagnetic coil. ■

10. Remove the jumper wire from the right clutch electromagnetic coil 2P connector terminal No. 1.
11. Connect right clutch electromagnetic coil 2P connector terminal No. 2 to body ground with a jumper wire.

RIGHT CLUTCH ELECTROMAGNETIC COIL 2P CONNECTOR

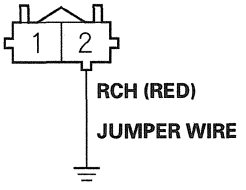

Wire side of female terminals

12. Check for continuity between SH-AWD control unit connector terminal B6 and body ground.

SH-AWD CONTROL UNIT CONNECTOR B (8P)

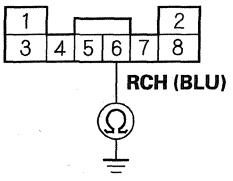

Wire side of female terminals

Is there continuity?

YES—Go to step 13.

NO—Repair an open in the wire between the SH-AWD control unit and the right clutch electromagnetic coil. ■

13. Remove the jumper wire from right clutch electromagnetic coil 2P connector terminal No. 2.

14. Reconnect all connectors.

15. Turn the ignition switch to ON (II).

16. Check the REAR DIFFERENTIAL FLUID TEMPERATURE in the DATA LIST with the HDS before proceeding to the next step. The temperature should be above 68 °F (20 °C). If the temperature is below 68 °F (20 °C), drive the vehicle to warm up the rear differential until the fluid temperature becomes above 68 °F (20 °C).

17. Disconnect the right clutch electromagnetic coil 2P connector.

18. Measure the resistance between right clutch electromagnetic coil 2P connector terminals No. 1 and No. 2.

RIGHT CLUTCH ELECTROMAGNETIC COIL 2P CONNECTOR

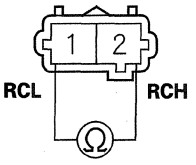

Terminal side of male terminals

Is there 1.5 Ω or more?

YES—Replace the rear differential side case (see page 15-120). ■

NO—Substitute a known-good SH-AWD control unit (see page 15-99) and recheck. If the symptom/indication goes away with the known-good SH-AWD control unit, replace the original SH-AWD control unit (see page 15-99). ■

DTC Troubleshooting (cont'd)

DTC 57-2, 57-4: Right Clutch Electromagnetic Coil (Short)

NOTE: Before you troubleshoot, review the general troubleshooting information (see page 15-4).

1. Turn the ignition switch to ON (II).
2. Clear the DTC with the HDS.
3. Do the direct electromagnetic clutch test (see page 15-93).
4. Check for DTCs with the HDS.

   Is DTC 57-2 or 57-4 indicated?

   YES—Go to step 5.

   NO—Intermittent failure, the system is OK at this time. ■
5. Turn the ignition switch to LOCK (0).
6. Disconnect SH-AWD control unit connector B (8P).
7. Disconnect the right clutch electromagnetic coil 2P connector.
8. Check for continuity between SH-AWD control unit connector terminals B6 and B7.

SH-AWD CONTROL UNIT CONNECTOR B (8P)

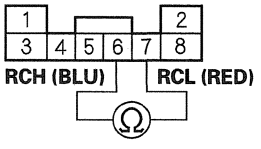

Wire side of female terminals

Is there continuity?

YES—Repair a short in the wires between SH-AWD control unit connector terminals B6 and B7. ■

NO—Go to step 9.

9. Turn the ignition switch to ON (II).
10. Measure the voltage between SH-AWD control unit connector terminal B6 and body ground.

SH-AWD CONTROL UNIT CONNECTOR B (8P)

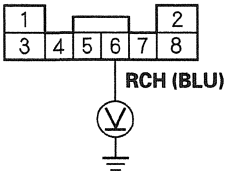

Wire side of female terminals

Is there more than 0.5 V?

YES—Repair a short to power in the wires between SH-AWD control unit connector terminal B6 and the right clutch electromagnetic coil. ■

NO—Go to step 11.

11. Turn the ignition switch to LOCK (0).
12. Reconnect all connectors.
13. Turn the ignition switch to ON (II).

14. Check the REAR DIFFERENTIAL FLUID TEMPERATURE in the DATA LIST with the HDS before proceeding to the next step. The temperature should be above 68 °F (20 °C). If the temperature is below 68 °F (20 °C), drive the vehicle to warm up the rear differential until the fluid temperature becomes above 68 °F (20 °C).

15. Turn the ignition switch to LOCK (0).

16. Disconnect the right clutch electromagnetic coil 2P connector.

17. Measure the resistance between right clutch electromagnetic coil 2P connector terminals No. 1 and No. 2.

RIGHT CLUTCH ELECTROMAGNETIC COIL 2P CONNECTOR

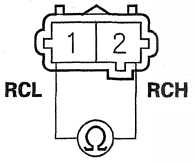

Terminal side of male terminals

Is there 0.45 Ω or less?

YES—Replace the rear differential side case (see page 15-120). ■

NO—Substitute a known-good SH-AWD control unit (see page 15-99) and recheck. If the symptom/indication goes away with the known-good SH-AWD control unit, replace the original SH-AWD control unit (see page 15-99). ■

DTC Troubleshooting (cont'd)

DTC 59-1: SH-AWD Control Unit Power Supply Monitor Circuit

NOTE: Before you troubleshoot, review the general troubleshooting information (see page 15-4).

1. Turn the ignition switch to ON (II).
2. Clear the DTC with the HDS.
3. Start the engine.
4. Check for DTCs with the HDS.

   Is DTC 59-1 indicated?

   YES—Go to step 5.

   NO—Intermittent failure, the system is OK at this time. ■
5. Measure the voltage between SH-AWD control unit connector terminals B1 and B2.

SH-AWD CONTROL UNIT CONNECTOR B (8P)

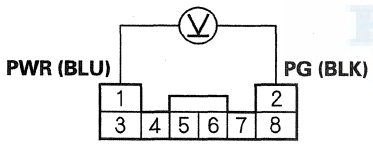

Wire side of female terminals

Is there 18 V or more?

YES—Check the charging system (see page 4-28). ■

NO—Substitute a known-good SH-AWD control unit (see page 15-99) and recheck. If the symptom/indication goes away with the known-good SH-AWD control unit, replace the original SH-AWD control unit (see page 15-99). ■

DTC 61-1: Shift Solenoid Valve (Open)

NOTE: Before you troubleshoot, review the general troubleshooting information (see page 15-4).

1. Turn the ignition switch to ON (II).
2. Clear the DTC with the HDS.
3. Do the SHIFT SOLENOID TEST with the HDS.
4. Check for DTCs with the HDS.

   Is DTC 61-1 indicated?

   YES—Go to step 5.

   NO—Intermittent failure, the system is OK at this time. ■
5. Turn the ignition switch to LOCK (0).
6. Disconnect SH-AWD control unit connectors A (26P) and B (8P).

7. Measure the resistance between SH-AWD control unit connector terminals A1 and B8.

SH-AWD CONTROL UNIT CONNECTOR B (8P)
Wire side of female terminals

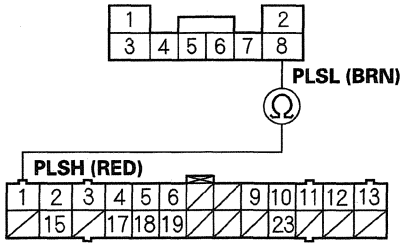

SH-AWD CONTROL UNIT CONNECTOR A (26P)
Wire side of female terminals

Is there 20 Ω or more?

YES—Go to step 8.

NO—Check for loose connection terminals between the SH-AWD control unit and the shift solenoid valve. If the connections are OK, substitute a known-good SH-AWD control unit (see page 15-99) and recheck. If the symptom/indication goes away with the known-good SH-AWD control unit, replace the original SH-AWD control unit (see page 15-99). ■

8. Disconnect the shift solenoid valve 2P connector.

9. Connect a jumper wire between SH-AWD control unit connector terminals A1 and B8.

SH-AWD CONTROL UNIT CONNECTOR B (8P)
Wire side of female terminals

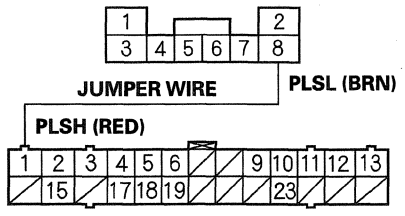

SH-AWD CONTROL UNIT CONNECTOR A (26P)
Wire side of female terminals

10. Check for continuity between shift solenoid valve 2P connector terminals No. 1 and No. 2.

SHIFT SOLENOID VALVE 2P CONNECTOR

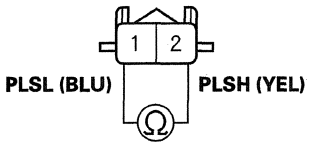

Wire side of female terminals

Is there continuity?

YES—Replace the shift solenoid valve (see page 15-104). ■

NO—Repair an open in the wire between the SH-AWD control unit and the shift solenoid valve. ■

DTC Troubleshooting (cont'd)

DTC 61-2: Shift Solenoid Valve (Short)

NOTE: Before you troubleshoot, review the general troubleshooting information (see page 15-4).

1. Turn the ignition switch to ON (II).
2. Clear the DTC with the HDS.
3. Do the SHIFT SOLENOID TEST with the HDS.
4. Check for DTCs with the HDS.

   Is DTC 61-2 indicated?

   YES—Go to step 5.

   NO—Intermittent failure, the system is OK at this time. ■

5. Turn the ignition switch to LOCK (0).
6. Disconnect SH-AWD control unit connectors A (26P) and B (8P).
7. Measure the resistance between SH-AWD control unit connector terminals A1 and B8.

SH-AWD CONTROL UNIT CONNECTOR B (8P)
Wire side of female terminals

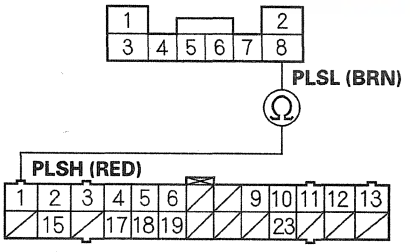

SH-AWD CONTROL UNIT CONNECTOR A (26P)
Wire side of female terminals

Is there 10 Ω or more?

YES—Go to step 10.

NO—Go to step 8.

8. Disconnect the shift solenoid valve 2P connector.
9. Check for continuity between SH-AWD control unit connector terminal A1 and body ground.

SH-AWD CONTROL UNIT CONNECTOR A (26P)

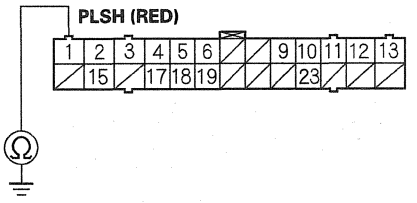

Wire side of female terminals

Is there continuity?

YES—Repair a short to ground in the wire between the SH-AWD control unit and the shift solenoid valve. ■

NO—Replace the shift solenoid valve (see page 15-104). ■

10. Check for continuity between SH-AWD control unit connector terminal B2 and body ground.

SH-AWD CONTROL UNIT CONNECTOR B (8P)

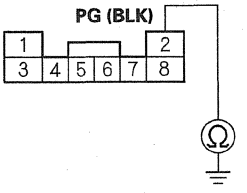

Wire side of female terminals

Is there continuity?

YES—Substitute a known-good SH-AWD control unit (see page 15-99) and recheck. If the symptom/indication goes away with the known-good SH-AWD control unit, replace the original SH-AWD control unit (see page 15-99). ■

NO—Repair an open in the wire between SH-AWD control unit and body ground or poor ground (G652). ■

DTC 74-1: One Way Clutch Malfunction

NOTE: Before you troubleshoot, review the general troubleshooting information (see page 15-4).

1. Turn the ignition switch to ON (II).
2. Check for DTCs with the HDS.

   Are DTC 27-1 and 27-2 indicated at the same time?

   YES—Go to the DTC 27-1 and/or 27-2 troubleshooting first, then recheck. ■

   NO—Go to step 3.
3. Check for DTCs in the VSA system with the HDS.

   Are any VSA system DTCs indicated?

   YES—Go to the indicated DTC's troubleshooting. ■

   NO—Replace the rear differential center case (see page 15-119). ■

DTC Troubleshooting (cont'd)

DTC 75-1: Acceleration Device Malfunction (Stuck OFF)

NOTE: Before you troubleshoot, review the general troubleshooting information (see page 15-4).

1. Turn the ignition switch to ON (II).
2. Check for DTCs with the HDS.

   Are DTC 27-1 and 27-2 indicated at the same time?

   YES—Go to the DTC 27-1 and/or 27-2 troubleshooting first, then recheck. ■

   NO—Go to step 3.
3. Check for DTCs in the VSA system with the HDS.

   Are any VSA system DTCs indicated?

   YES—Go to the indicated DTC's troubleshooting. ■

   NO—Go to step 4.
4. Clear the DTC with the HDS.
5. Start the engine.
6. Do the acceleration device test (see page 15-95).
7. Check for DTCs with the HDS.

   Is DTC 75-1 indicated?

   YES—Go to step 8.

   NO—Intermittent failure, the system is OK at this time. ■
8. Check the ACCELERATION RATIO in the DATA LIST with the HDS.

   Is the acceleration ratio between 0.94 and 0.98?

   YES—Go to step 9.

   NO—Substitute a known-good SH-AWD control unit (see page 15-99) and recheck. If the symptom/indication goes away with the known-good SH-AWD control unit, replace the original SH-AWD control unit (see page 15-99). ■
9. Check the rear differential fluid level (see page 15-96).

   Is the fluid level OK?

   YES—Go to step 10.

   NO—Adjust the fluid to the proper level (see page 15-96). ■
10. Check the rear differential fluid pressure.

    Is there pressure when it is accelerating?

    YES—Replace the rear differential center case (see page 15-119). ■

    NO—Replace the shift solenoid valve (see page 15-104). ■

DTC 75-2: Acceleration Device Malfunction (Stuck ON)

NOTE: Before you troubleshoot, review the general troubleshooting information (see page 15-4).

1. Turn the ignition switch to ON (II).
2. Check for DTCs with the HDS.

   Are DTC 27-1 and 27-2 indicated at the same time?

   YES—Go to the DTC 27-1 and/or 27-2 troubleshooting first, then recheck. ■

   NO—Go to step 3.
3. Check for DTCs in the VSA system with the HDS.

   Are any VSA system DTCs indicated?

   YES—Go to the indicated DTC's troubleshooting. ■

   NO—Go to step 4.
4. Clear the DTC with the HDS.
5. Start the engine.
6. Do the acceleration device test (see page 15-95).
7. Check for DTCs with the HDS.

   Is DTC 75-2 indicated?

   YES—Go to step 8.

   NO—Intermittent failure, the system is OK at this time. ■
8. Check the ACCELERATION RATIO in the DATA LIST with the HDS.

   Is the acceleration ratio between 1.02 and 1.06?

   YES—Go to step 9.

   NO—Substitute a known-good SH-AWD control unit (see page 15-99) and recheck. If the symptom/indication goes away with the known-good SH-AWD control unit, replace the original SH-AWD control unit (see page 15-99). ■
9. Check the rear differential fluid pressure.

   Is there pressure when it is accelerating?

   YES—Replace the rear differential center case (see page 15-119). ■

   NO—Replace the shift solenoid valve (see page 15-104). ■

DTC Troubleshooting (cont'd)

DTC 76-1: Rear Differential Fluid Overheats

NOTE:
- When the temperature of the rear differential fluid is abnormally high, the SH-AWD indicator comes on. This is not necessarily a problem, but DTC 76-1 will be stored.
- Check the rear differential fluid level (see page 15-96). If it's low, refill it, clear the DTC, and recheck.
- Before you troubleshoot, review the general troubleshooting information (see page 15-4).

1. Turn the ignition switch to ON (II).
2. Clear the DTC with the HDS.
3. Start the engine.
4. Test-drive under these conditions:
   - Vehicle speed at 25 mph (40 km/h) or more
   - Engine speed less than 2,500 rpm for at least 30 seconds.
5. Check for DTCs with the HDS.

   Is DTC 76-1 indicated?

   YES—Go to step 6.

   NO—Intermittent failure, the system is OK at this time. ■
6. Check for DTCs with the HDS.

   Are DTC 27-1 and 27-2 indicated at the same time?

   YES—Go to the DTC 27-1 and/or 27-2 troubleshooting first, then recheck. ■

   NO—Go to step 7.
7. Check for DTCs in the VSA system with the HDS.

   Are any VSA system DTCs indicated?

   YES—Go to the indicated DTC's troubleshooting. ■

   NO—Go to step 8.
8. Check for rear brake drag.

   Do the rear brakes drag?

   YES—Fix the rear brakes (see page 19-3). ■

   NO—Go to step 9.
9. Raise the vehicle on a lift, make sure it is securely supported, and allow all four wheels to rotate freely.
10. Start the engine and turn the VSA off (the VSA OFF lamp in the gauge control module turn on). Run the engine in D until the vehicle speed reaches 19 mph (30 km/h) and maintain the speed for 1 minute, then slow down and stop the wheels.
11. Check the HYPOID GEAR SPEED SENSOR VALUE in the DATA LIST with the HDS.

    Is the hypoid gear speed sensor value shown?

    YES—Check the hypoid gear speed sensor installation. If it is installed properly, replace the rear differential center case (see page 15-119). ■

    NO—Go to step 12.
12. Turn the ignition switch to LOCK (0), then turn the ignition switch to ON (II).

13. Measure the voltage between SH-AWD control unit connector terminals A5 and A13.

SH-AWD CONTROL UNIT CONNECTOR A (26P)

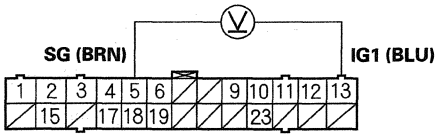

Wire side of female terminals

Does the voltage change when the propeller shaft is rotated?

YES—Substitute a known-good SH-AWD control unit (see page 15-99) and recheck. If the symptom/indication goes away with the known-good SH-AWD control unit, replace the original SH-AWD control unit (see page 15-99). ■

NO—Go to step 14.

14. Turn the ignition switch to LOCK (0).

15. Disconnect the hypoid gear speed sensor 3P connector.

16. Turn the ignition switch to ON (II).

17. Measure the voltage between hypoid gear speed sensor 3P connector terminals No. 1 and No. 3.

HYPOID GEAR SPEED SENSOR 3P CONNECTOR

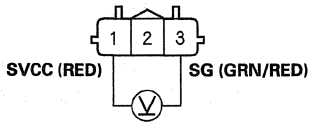

Wire side of female terminals

Is there 4.0 V or more?

YES—Go to step 18.

NO—Go to step 22.

18. Turn the ignition switch to LOCK (0).

19. Disconnect SH-AWD control unit connector A (26P).

20. Connect hypoid gear speed sensor 3P connector terminal No. 2 to body ground with a jumper wire.

HYPOID GEAR SPEED SENSOR 3P CONNECTOR

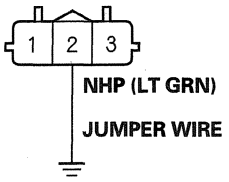

Wire side of female terminals

21. Check for continuity between SH-AWD control unit connector terminal A2 and body ground.

SH-AWD CONTROL UNIT CONNECTOR A (26P)

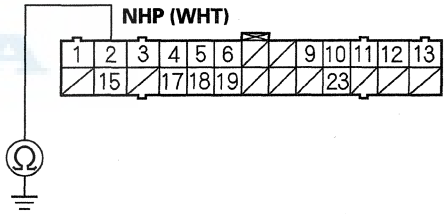

Wire side of female terminals

Is there continuity?

YES—Replace the hypoid gear speed sensor (see page 15-98). ■

NO—Repair an open in the wire between SH-AWD control unit and the hypoid gear speed sensor. ■

22. Turn the ignition switch to LOCK (0).

23. Disconnect SH-AWD control unit connector A (26P).

(cont'd)

DTC Troubleshooting (cont'd)

24. Connect hypoid gear speed sensor 3P connector terminal No. 1 to body ground with a jumper wire.

HYPOID GEAR SPEED SENSOR 3P CONNECTOR

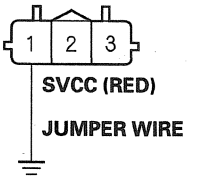

Wire side of female terminals

25. Check for continuity between SH-AWD control unit connector terminal A18 and body ground.

SH-AWD CONTROL UNIT CONNECTOR A (26P)

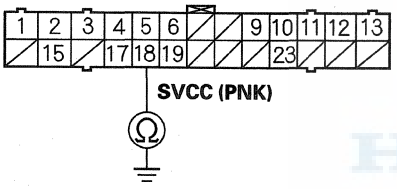

Wire side of female terminals

Is there continuity?

YES—Go to step 26.

NO—Repair an open in the wire between SH-AWD control unit and the hypoid gear speed sensor. ■

26. Remove the jumper wire from hypoid gear speed sensor 3P connector terminal No. 1.

27. Connect hypoid gear speed sensor 3P connector terminal No. 3 to body ground with a jumper wire.

HYPOID GEAR SPEED SENSOR 3P CONNECTOR

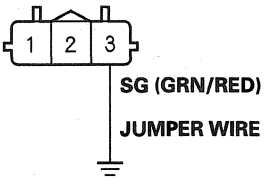

Wire side of female terminals

28. Check for continuity between SH-AWD control unit connector terminal A5 and body ground.

SH-AWD CONTROL UNIT CONNECTOR A (26P)

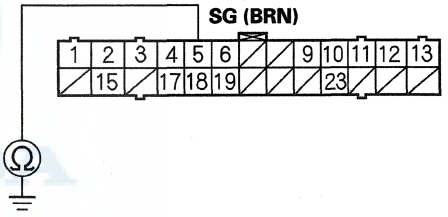

Wire side of female terminals

Is there continuity?

YES—Substitute a known-good SH-AWD control unit (see page 15-99) and recheck. If the symptom/indication goes away with the known-good SH-AWD control unit, replace the original SH-AWD control unit (see page 15-99). ■

NO—Repair an open in the wire between SH-AWD control unit and the hypoid gear speed sensor. ■

DTC 77-1: The Functional Abnormalities of Fuel Emission or Automatic Transmission

NOTE: Before you troubleshoot, review the general troubleshooting information (see page 15-4).

1. Turn the ignition switch to ON (II).
2. Clear the DTC with the HDS.
3. Start the engine.
4. Check for DTCs with the HDS.

   Is DTC 77-1 indicated?

   YES—Go to step 5.

   NO—Intermittent failure, the system is OK at this time. ■
5. Check for DTCs in the Fuel Emission or Automatic Transmission system with the HDS.

   Are any Fuel Emission or Automatic Transmission system DTCs indicated?

   YES—Go to the indicated DTC's troubleshooting. ■

   NO—Substitute a known-good SH-AWD control unit (see page 15-99) and recheck. If the symptom/indication goes away with the known-good SH-AWD control unit, replace the original SH-AWD control unit (see page 15-99). ■

DTC 77-2: The Functional Abnormalities of VSA Modulator-Control Unit

NOTE: Before you troubleshoot, review the general troubleshooting information (see page 15-4).

1. Turn the ignition switch to ON (II).
2. Clear the DTC with the HDS.
3. Start the engine.
4. Check for DTCs with the HDS.

   Is DTC 77-2 indicated?

   YES—Go to step 5.

   NO—Intermittent failure, the system is OK at this time. ■
5. Check for DTCs in the VSA system with the HDS.

   Are any VSA system DTCs indicated?

   YES—Go to the indicated DTC's troubleshooting. ■

   NO—Substitute a known-good SH-AWD control unit (see page 15-99) and recheck. If the symptom/indication goes away with the known-good SH-AWD control unit, replace the original SH-AWD control unit (see page 15-99). ■

DTC Troubleshooting (cont'd)

DTC 77-3: The Functional Abnormalities of Gauge Control Module

NOTE: Before you troubleshoot, review the general troubleshooting information (see page 15-4).

1. Turn the ignition switch to ON (II).
2. Clear the DTC with the HDS.
3. Start the engine.
4. Check for DTCs with the HDS.

   Is DTC 77-3 indicated?

   YES—Go to step 5.

   NO—Intermittent failure, the system is OK at this time. ■
5. Check for DTCs in the Body Electrical with the HDS.

   Are any gauge control module DTCs indicated?

   YES—Go to the indicated DTC's troubleshooting. ■

   NO—Substitute a known-good SH-AWD control unit (see page 15-99) and recheck. If the symptom/indication goes away with the known-good SH-AWD control unit, replace the original SH-AWD control unit (see page 15-99). ■

DTC 77-6: Steering Angle Sensor Malfunction

NOTE: Before you troubleshoot, review the general troubleshooting information (see page 15-4).

1. Turn the ignition switch to ON (II).
2. Clear the DTC with the HDS.
3. Start the engine.
4. Check for DTCs with the HDS.

   Is DTC 77-6 indicated?

   YES—Go to step 5.

   NO—Intermittent failure, the system is OK at this time. ■
5. Check for DTCs in the VSA system with the HDS.

   Are any steering angle sensor DTCs indicated?

   YES—Go to the indicated DTC's troubleshooting. ■

   NO—Substitute a known-good SH-AWD control unit (see page 15-99) and recheck. If the symptom/indication goes away with the known-good SH-AWD control unit, replace the original SH-AWD control unit (see page 15-99). ■

DTC 78-xx (78-3 to 78-23): SH-AWD Control Unit Self-Diagnostic Malfunction

NOTE: Before you troubleshoot, review the general troubleshooting information (see page 15-4).

1. Turn the ignition switch to ON (II).
2. Clear the DTC with the HDS.
3. Turn the ignition switch to LOCK (0).
4. Turn the ignition switch to ON (II).
5. Check for DTCs with the HDS.

   Is DTC 78-xx indicated?

   YES—Substitute a known-good SH-AWD control unit (see page 15-99) and recheck. If the symptom/indication goes away with the known-good SH-AWD control unit, replace the original SH-AWD control unit (see page 15-99). ■

   NO—Intermittent failure, the system is OK at this time. ■

DTC 81-1: Left Search Coil Sensor Malfunction

NOTE: Before you troubleshoot, review the general troubleshooting information (see page 15-4).

1. Turn the ignition switch to ON (II).
2. Clear the DTC with the HDS.
3. Do the SH-AWD differential clutch torque memorization (see page 15-7).
4. Test-drive the vehicle at a speed of more than 1 mph (2 km/h) for at least 1 second.
5. Check for DTCs with the HDS.

   Is DTC 81-1 indicated?

   YES—Replace the rear differential side case (see page 15-120). ■

   NO—Intermittent failure, the system is OK at this time. ■

DTC Troubleshooting (cont'd)

DTC 81-2: Left Search Coil Sensor (Open or Short)

NOTE: Before you troubleshoot, review the general troubleshooting information (see page 15-4).

1. Turn the ignition switch to ON (II).
2. Turn the ignition switch to LOCK (0).
3. Disconnect SH-AWD control unit connector A (26P).
4. Check for continuity between SH-AWD control unit connector terminals A4 and A17.

SH-AWD CONTROL UNIT CONNECTOR A (26P)

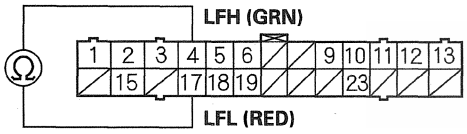

Wire side of female terminals

Is there continuity?

YES—Go to step 5.

NO—Go to step 7.

5. Measure the resistance between SH-AWD control unit connector terminals A4 and A17.

SH-AWD CONTROL UNIT CONNECTOR A (26P)

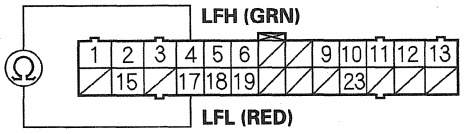

Wire side of female terminals

Is there 2.0 Ω or more?

YES—Go to step 6.

NO—Go to step 10.

6. Check for continuity between SH-AWD control unit connector terminal A4 and body ground.

SH-AWD CONTROL UNIT CONNECTOR A (26P)

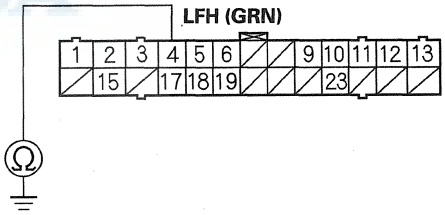

Wire side of female terminals

Is there continuity?

YES—Repair a short in the wire between SH-AWD control unit and body ground. ■

NO—Substitute a known-good SH-AWD control unit (see page 15-99) and recheck. If the symptom/indication goes away with the known-good SH-AWD control unit, replace the original SH-AWD control unit (see page 15-99). ■

7. Disconnect the left search coil 2P connector.
8. Connect a jumper wire between SH-AWD control unit connector terminals A4 and A17.

SH-AWD CONTROL UNIT CONNECTOR A (26P)

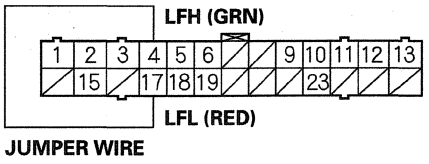

Wire side of female terminals

9. Check for continuity between left search coil 2P connector terminals No. 1 and No. 2.

LEFT SEARCH COIL 2P CONNECTOR

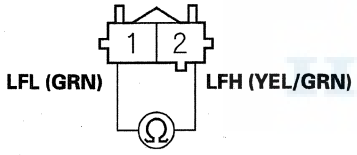

Wire side of female terminals

Is there continuity?

YES—Replace the rear differential side case (see page 15-120). ■

NO—Repair an open in the wire between the left search coil and the SH-AWD control unit. ■

10. Disconnect the left search coil 2P connector.
11. Check for continuity between left search coil 2P connector terminals No. 1 and No. 2.

LEFT SEARCH COIL 2P CONNECTOR

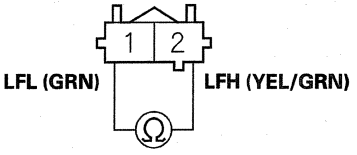

Wire side of female terminals

Is there continuity?

YES—Repair a short in the wire between the SH-AWD control unit and the left search coil. ■

NO—Replace the rear differential side case (see page 15-120). ■

HONDA

DTC Troubleshooting (cont'd)

DTC 81-3: Left Search Coil Magnetic Flux Characteristic

NOTE: Before you troubleshoot, review the general troubleshooting information (see page 15-4).

1. Turn the ignition switch to ON (II).
2. Turn the ignition switch to LOCK (0).
3. Disconnect SH-AWD control unit connector A (26P).
4. Measure the resistance between SH-AWD control unit connector terminals A4 and A17.

SH-AWD CONTROL UNIT CONNECTOR A (26P)

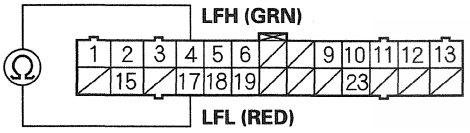

Wire side of female terminals

Is there 2.0 Ω or less?

YES—Replace the rear differential side case (see page 15-120). ■

NO—Go to step 5.

5. Clear the DTC with the HDS.
6. Do the SH-AWD differential clutch torque memorization (see page 15-7).
7. Test-drive the vehicle at a speed of more than 1 mph (2 km/h) for at least 1 second.
8. Check for DTCs with the HDS.

Is DTC 81-1, 81-2, 82-1, and/or 82-2 indicated?

YES—Go to the indicated DTC's troubleshooting. ■

NO—Intermittent failure, the system is OK at this time. ■

DTC 82-1: Right Search Coil Sensor Malfunction

NOTE: Before you troubleshoot, review the general troubleshooting information (see page 15-4).

1. Turn the ignition switch to ON (II).
2. Clear the DTC with the HDS.
3. Do the SH-AWD differential clutch torque memorization (see page 15-7).
4. Test-drive the vehicle at a speed of more than 1 mph (2 km/h) for at least 1 second.
5. Check for DTCs with the HDS.

Is DTC 82-1 indicated?

YES—Replace the rear differential side case (see page 15-120). ■

NO—Intermittent failure, the system is OK at this time. ■

DTC 82-2: Right Search Coil Sensor (Open or Short)

NOTE: Before you troubleshoot, review the general troubleshooting information (see page 15-4).

1. Turn the ignition switch to ON (II).
2. Turn the ignition switch to LOCK (0).
3. Disconnect SH-AWD control unit connector A (26P).
4. Check for continuity between SH-AWD control unit connector terminals A6 and A19.

SH-AWD CONTROL UNIT CONNECTOR A (26P)

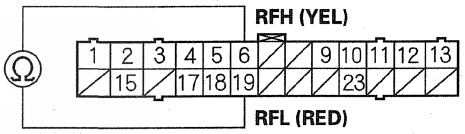

Wire side of female terminals

Is there continuity?

YES—Go to step 5.

NO—Go to step 7.

(cont'd)

DTC Troubleshooting (cont'd)

5. Measure the resistance between SH-AWD control unit connector terminals A6 and A19.

SH-AWD CONTROL UNIT CONNECTOR A (26P)

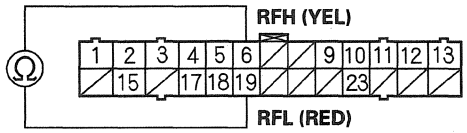

Wire side of female terminals

Is there 2.0 Ω or more?

YES—Go to step 6.

NO—Go to step 10.

6. Check for continuity between SH-AWD control unit connector terminal A6 and body ground.

SH-AWD CONTROL UNIT CONNECTOR A (26P)

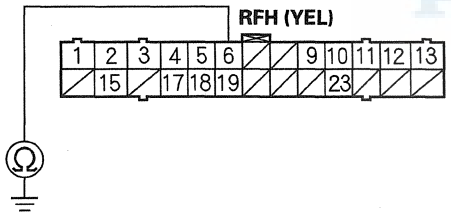

Wire side of female terminals

Is there continuity?

YES—Repair a short in the wire between SH-AWD control unit and body ground. ■

NO—Substitute a known-good SH-AWD control unit (see page 15-99) and recheck. If the symptom/indication goes away with the known-good SH-AWD control unit, replace the original SH-AWD control unit (see page 15-99). ■

7. Disconnect the right search coil 2P connector.

8. Connect a jumper wire between SH-AWD control unit connector terminals A6 and A19.

SH-AWD CONTROL UNIT CONNECTOR A (26P)

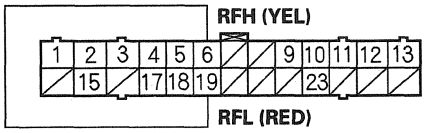

JUMPER WIRE

Wire side of female terminals

9. Check for continuity between right search coil 2P connector terminals No. 1 and No. 2.

RIGHT SEARCH COIL 2P CONNECTOR

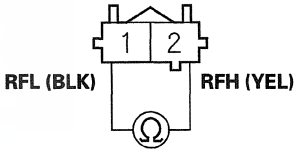

Wire side of female terminals

Is there continuity?

YES—Replace the rear differential side case (see page 15-120). ■

NO—Repair an open in the wire between the right search coil and the SH-AWD control unit. ■

10. Disconnect the right search coil 2P connector.

11. Check for continuity between right search coil 2P connector terminals No. 1 and No. 2.

RIGHT SEARCH COIL 2P CONNECTOR

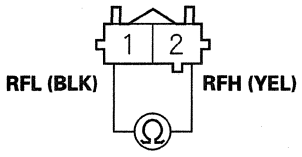

Wire side of female terminals

Is there continuity?

YES—Repair a short to ground in the wire between SH-AWD control unit and the right search coil. ■

NO—Replace the rear differential side case (see page 15-120). ■

DTC 82-3: Right Search Coil Sensor Magnetic Flux Characteristic

NOTE: Before you troubleshoot, review the general troubleshooting information (see page 15-4).

1. Turn the ignition switch to ON (II).
2. Turn the ignition switch to LOCK (0).
3. Disconnect SH-AWD control unit connector A (26P).
4. Measure the resistance between SH-AWD control unit connector terminals A6 and A19.

SH-AWD CONTROL UNIT CONNECTOR A (26P)

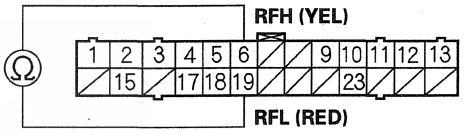

Wire side of female terminals

Is there 2.0 Ω or less?

YES—Replace the rear differential side case (see page 15-120). ■

NO—Go to step 5.

5. Clear the DTC with the HDS.
6. Do the SH-AWD differential clutch torque memorization (see page 15-7).
7. Test-drive the vehicle at a speed of more than 1 mph (2 km/h) for at least 1 second.
8. Check for DTCs with the HDS.

Is DTC 81-1, 81-2, 82-1, and/or 82-2 indicated?

YES—Go to the indicated DTC's troubleshooting. ■

NO—Intermittent failure, the system is OK at this time. ■

HONDA

Symptom Troubleshooting

The SH-AWD indicator does not go off, and no DTCs are stored

NOTE:
- Before you troubleshoot, review the general troubleshooting information (see page 15-4).
- Make sure the No. 1 (30 A) fuse in the passenger's under-hood fuse/relay box is OK.
- Make sure there are no loose connector terminals at the SH-AWD control unit.
- Make sure the charging system is OK.
- Make sure the PGM-FI system and the A/T system is not in the middle of updating.

1. Test the battery (see page 22-90). Charge or replace the battery if necessary.

2. Turn the ignition switch to ON (II).

3. Check the COMPLETE MEMORIZATION in the DATA LIST with the HDS.

   Does the data list show ''complete''?

   YES—Go to step 4.

   NO—Do the SH-AWD system memorization procedures for each of the following, then go to step 4.

   - SH-AWD differential clutch torque (see page 15-7)
   - Steering angle sensor neutral position (see page 19-104)
   - Yaw rate-lateral/longitudinal acceleration sensor neutral position (see page 15-7)
   - SH-AWD control unit initialization (see page 15-8)

4. Check for DTCs in the VSA system with the HDS.

   Are any steering angle sensor DTCs indicated?

   YES—Go to the indicated DTC's troubleshooting. ■

   NO—Go to step 5.

5. Start the engine.

6. Check the SH-AWD indicator value with the HDS.

   Is the SH-AWD indicator value OFF?

   YES—Go to the gauge control module self-diagnostic function (see page 22-396).

   NO—Substitute a known-good SH-AWD control unit (see page 15-99) and recheck. If the symptom/indication goes away with the known-good SH-AWD control unit, replace the original SH-AWD control unit (see page 15-99). ■

The SH-AWD indicator does not come on

NOTE: Before you troubleshoot, review the general troubleshooting information (see page 15-4).

1. Turn the ignition switch to ON (II).
2. Check the SH-AWD indicator.

   Does the SH-AWD indicator come on and go off?

   YES—Intermittent failure, the system is OK at this time.■

   NO—Go to step 3.
3. Turn the ignition switch to LOCK (0).
4. Disconnect SH-AWD control unit connector A (26P) and connector B (8P).
5. Turn the ignition switch to ON (II).
6. Check the SH-AWD indicator.

   Does the SH-AWD indicator come on?

   YES—Substitute a known-good SH-AWD control unit (see page 15-99) and recheck. If the symptom/indication goes away with the known-good SH-AWD control unit, replace the original SH-AWD control unit (see page 15-99).■

   NO—Go to the gauge control module self-diagnostic function (see page 22-396).■

SH-AWD Function Test

Special Tools Required
Adapter, torque wrench 070AJ-SJAA101
Oil Pressure Hose 07MAJ-PY4011A
Oil Pressure Hose Adapter 07MAJ-PY40120
Oil Pressure Gauge 07406-0070100

Direct Electromagnetic Clutch Test

NOTE:
- No DTC was detected.
- The shift lever is in N.
- The SH-AWD control unit had been initialized.
- The tire pressures are at the specified value.
- Tire size and wear are the same between the left and right tires.

1. With the ignition switch in LOCK (0), connect the HDS to the DLC (A) located under the driver's side of the dashboard.

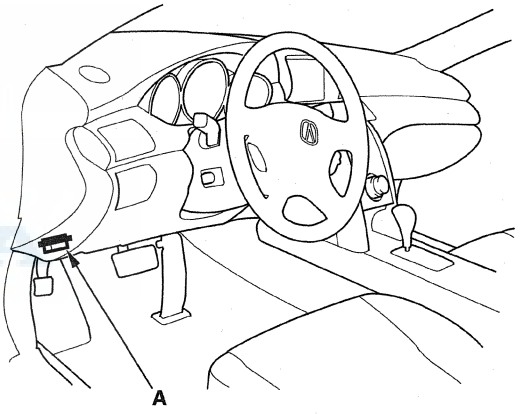

2. Turn the ignition switch to ON (II).
3. Make sure the HDS communicates with the vehicle and the SH-AWD control unit. If it does not, go to the DLC circuit troubleshooting (see page 11-211).

(cont'd)

SH-AWD Function Test (cont'd)

4. Check that the differential fluid temperature is above 68 °F (20 °C) with the HDS. If it is below 68 °F (20 °C), raise the temperature by driving the vehicle in circles or by constantly turning.

5. Raise the vehicle on a lift, and make sure it is securely supported.

6. Remove the rear wheels.

7. Install the torque wrench adapter on the rear wheel hub.

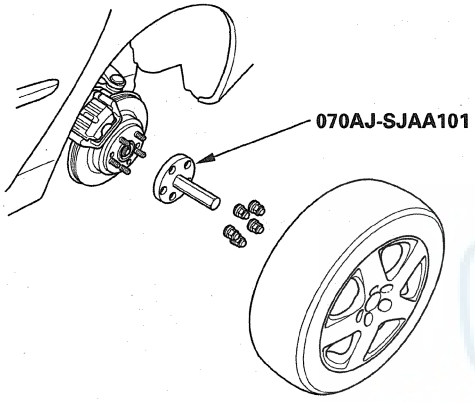

8. Do the DIRECT ELECTROMAGNETIC CLUTCH TEST with the HDS.

9. Install a torque wrench on the torque wrench adapter as shown. Write down the torque value with the HDS while slowly rotating the rear hub with the torque wrench as shown (Turn the hub no more than 90 degrees in 7 to 10 seconds.).

   NOTE: Use a torque wrench capable of measuring up to 490 N·m (50 kgf·m, 360 lbf·ft) such as a commercially available Snap-on torque wrench TE352FUE.

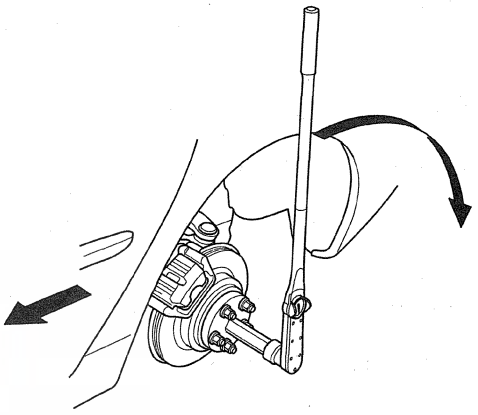

10. Enter the torque value into the HDS, and wait for the test to finish.

    - If the result shows the clutch driving force is normal, the clutch assembly is OK.
    - If the result shows the clutch driving force is abnormal, replace the differential fluid (see page 15-96), and retest. If the result still shows the clutch driving force is abnormal, replace the rear differential side case (see page 15-120).

Acceleration Device Test

NOTE:
- No DTC is detected.
- The SH-AWD control unit has been initialized.
- The shift lever is in P.

1. With the ignition switch in LOCK (0), connect the HDS to the DLC (A) located under the driver's side of the dashboard.

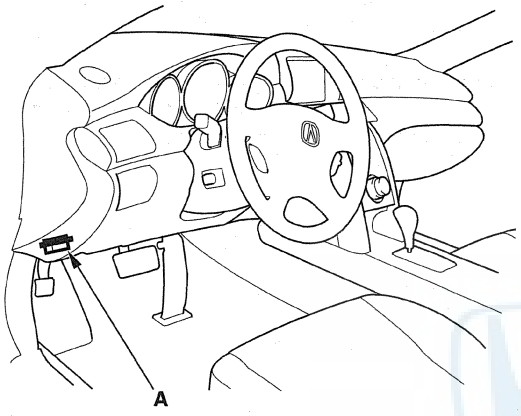

2. Turn the ignition switch to ON (II).

3. Make sure the HDS communicates with the vehicle and the SH-AWD control unit. If it does not, go to the DLC circuit troubleshooting (see page 11-211).

4. Raise the vehicle on a lift, and make sure it is securely supported.

5. Do the ACCELERATION DEVICE TEST with the HDS.

6. Look at the results displayed on the HDS.

   - If the acceleration ratio is lower than the normal value when decelerating is displayed, replace the rear differential center case (see page 15-119).
   - If the acceleration ratio is higher than the normal value when decelerating is displayed, go to step 7.
   - If the acceleration ratio is lower than the normal value when accelerating is displayed, go to step 12.
   - If the acceleration ratio is higher than the normal value when accelerating is displayed, replace the SH-AWD control unit (see page 15-99).

7. Remove the 8 mm bolt (A) and the sealing washer (B) from the differential (C) as shown.

   NOTE: Install the parts in the reverse order of removal with a new sealing washer.

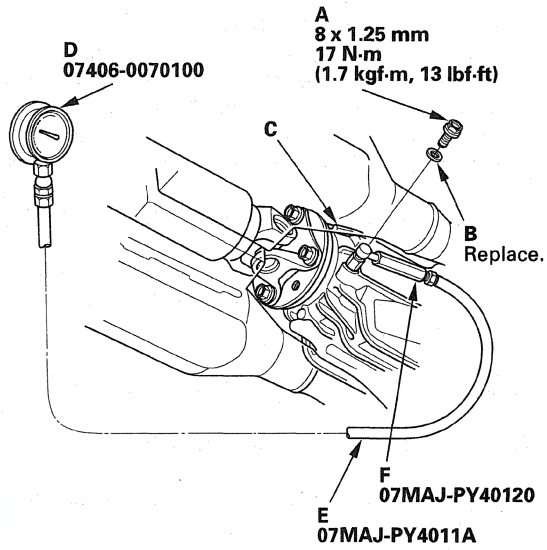

8. Connect the oil pressure gauge (D), the oil pressure hose (E) and the oil pressure hose adapter (F), then install the assembly into the differential. Route the hose under the vehicle toward the front door.

9. Do the ACCELERATION DEVICE TEST with the HDS. When you get to the "Keep the speed constant between 22 mph (41 km/h) and 28 mph (52 km/h)" screen in the test, write down the pressure indicated on the pressure gauge. Complete the test.

   - If the hydraulic pressure was above 780kpa (8.0 kgf/cm^2, 113 psi), go to step 10.
   - If the hydraulic pressure was below 780kpa (8.0 kgf/cm^2, 113 psi), replace the rear differential center case (see page 15-119).

10. Replace the shift solenoid valve (see page 15-104).

11. Do the ACCELERATION DEVICE TEST with the HDS.

    - If Normal is displayed, the problem has been fixed.
    - If the acceleration ratio is higher than the normal value when accelerating is displayed, replace the rear differential assembly.

(cont'd)

SH-AWD Function Test (cont'd)

12. Check the differential fluid level (see page 15-96). If the fluid level was low, add fluid as needed, then go to step 14. If the fluid level was OK, go to step 13.

13. Do the ACCELERATION DEVICE TEST with the HDS. After the SHIFT SOLENOID TEST (a portion of the acceleration device test) is complete, continue the acceleration device test. When you get to the "Keep the speed constant between 22 mph (41 km/h) and 28 mph (52 km/h)" screen, write down the pressure indicated on the pressure gauge. Complete the test.

    - If the hydraulic pressure was less than 780 kpa (8.0 kgf/cm^2, 113 psi), go to step 14.
    - If the hydraulic pressure was above 780 kpa (8.0 kgf/cm^2, 113 psi), replace the rear differential assembly.

14. Do the ACCELERATION DEVICE TEST with the HDS.

15. Look at the results displayed on the HDS.

    - If Normal is displayed, the problem has been fixed.
    - If "Acceleration device is abnormal" is displayed, go to step 16.

16. Replace the shift solenoid valve (see page 15-104), then do the ACCELERATION DEVICE TEST with the HDS.

    - If Normal is displayed, the problem has been fixed.
    - If "Acceleration device is abnormal" is displayed, replace the rear differential center case (see page 15-119).

Rear Differential Fluid Inspection and Replacement

Inspection

Clutch and Hypoid Chambers

1. Park the vehicle on level ground, and turn the ignition switch to LOCK (0).

2. Use solvent and a brush to wash any oil and dirt off the differential fluid inspection fluid filler plugs, and dry them with compressed air.

3. Remove each filler plug (A) and the sealing washer (B), then check the condition of the fluid, and make sure the fluid is at the proper level (C).

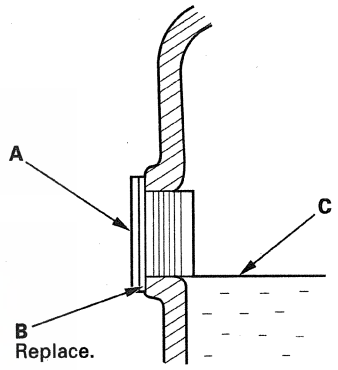

4. If the level is below the proper level, check for fluid leaks at the differential. If a problem is found, fix it before filling the differential with fluid.

5. The fluid level must reach up the bottom of the filler plug hole. If necessary, add the recommended fluid until it runs out, then reinstall the filler plug with a new sealing washer.

Replacement

Clutch Chamber

1. Park the vehicle on level ground, and turn the ignition switch to LOCK (0).
2. Remove the filler plug (A) and the sealing washer (B).

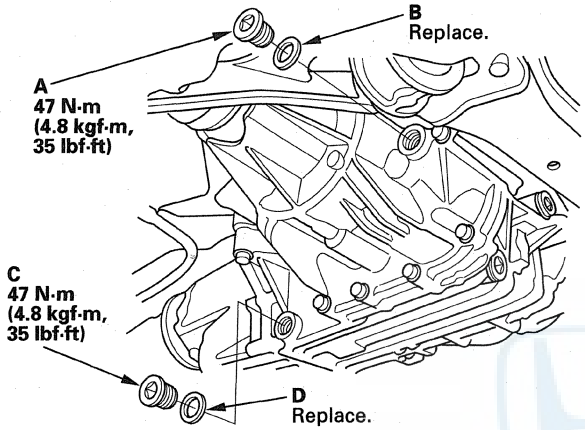

3. Remove the drain plug (C) and the sealing washer (D), and drain the fluid.
4. Reinstall the drain plug with a new sealing washer.
5. Refill the recommended fluid until it reaches the bottom of the filler plug hole.

   Fluid Capacity
   2.66 L (2.81 US qt) at fluid change
   3.11 L (3.29 US qt) at overhaul

   Recommended fluid: Acura ATF-Z1

6. Reinstall the filler plug with a new sealing washer.

Hypoid Chamber

7. Park the vehicle on level ground, and turn the ignition switch to LOCK (0).
8. Remove the filler plug (A) and the sealing washer (B).

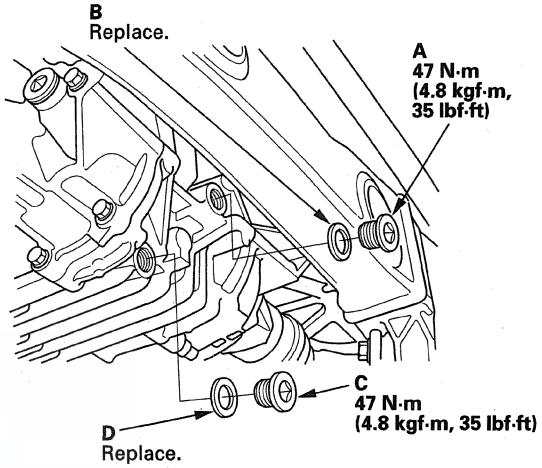

9. Remove the drain plug (C) and the sealing washer (D), and drain the fluid.
10. Reinstall the drain plug with a new sealing washer.
11. Refill the recommended fluid until it reaches the bottom of the filler plug hole.

    Fluid Capacity
    0.73 L (0.77 US qt) at fluid change
    0.75 L (0.79 US qt) at overhaul

    Recommended fluid: Acura ATF-Z1

12. Reinstall the filler plug with a new sealing washer.

Rear Differential Fluid Temperature Sensor Replacement

1. Drain the differential fluid (see page 15-96).
2. Remove the rear differential fluid temperature sensor cover (A), then disconnect the rear differential fluid temperature sensor 2P connector (B).

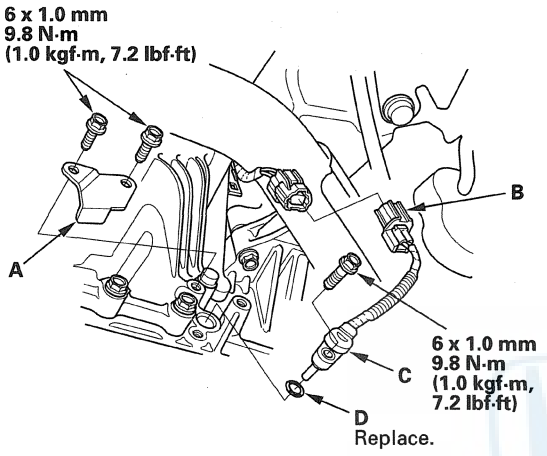

3. Remove the rear differential fluid temperature sensor (C).
4. Install the rear differential fluid temperature sensor with a new O-ring (D) in the reverse order of removal.
5. Refill the differential fluid (see page 15-96).

Hypoid Gear Speed Sensor Replacement

1. Disconnect the hypoid gear speed sensor 3P connector (A).

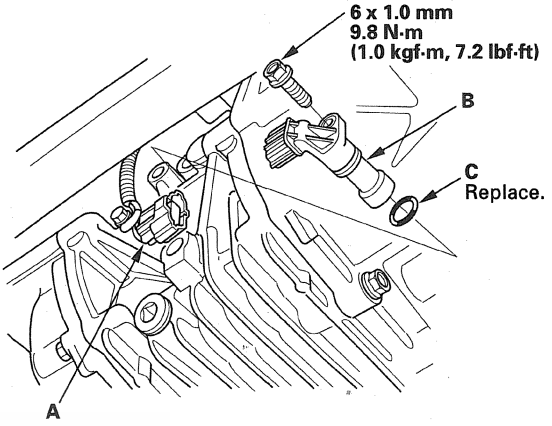

2. Remove the hypoid gear speed sensor (B).
3. Install the hypoid gear speed sensor with a new O-ring (C) in the reverse order of removal.

SH-AWD Control Unit Replacement

NOTE: The SH-AWD control unit must be initialized (see page 15-7) after replacement, otherwise the SH-AWD system will not function.

1. Remove the rear seat (see page 20-140).
2. Remove the trunk front trim panel (see page 20-83).
3. Loosen the SH-AWD control unit mounting bolts (A), then remove the SH-AWD control unit (B).

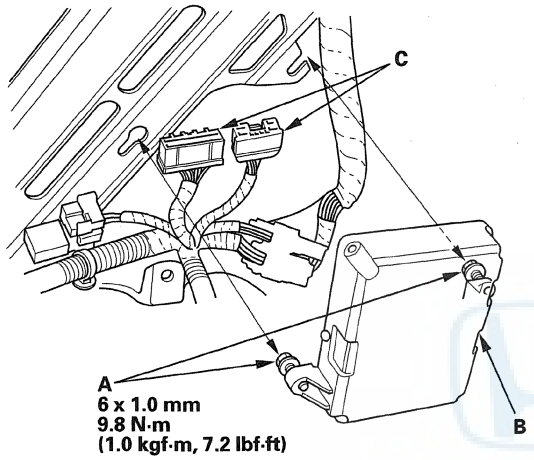

4. Disconnect the SH-AWD control unit connectors (C).
5. Install the SH-AWD control unit in the reverse order of removal.

SH-AWD Relay Replacement

1. Remove the rear seat (see page 20-140).
2. Remove the trunk front trim panel (see page 20-83).
3. Remove the SH-AWD relay (A).

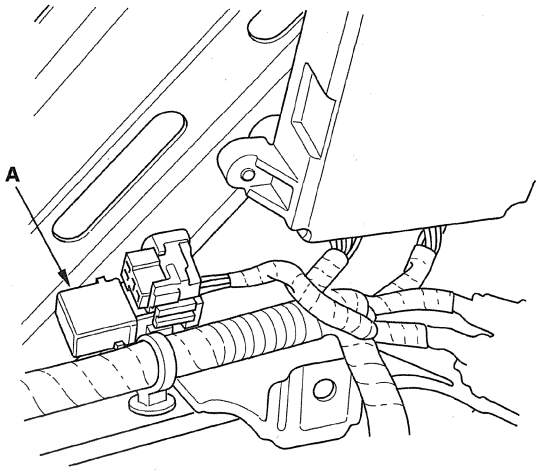

4. Install the SH-AWD relay in the reverse order of removal.

Rear Differential Mount Replacement

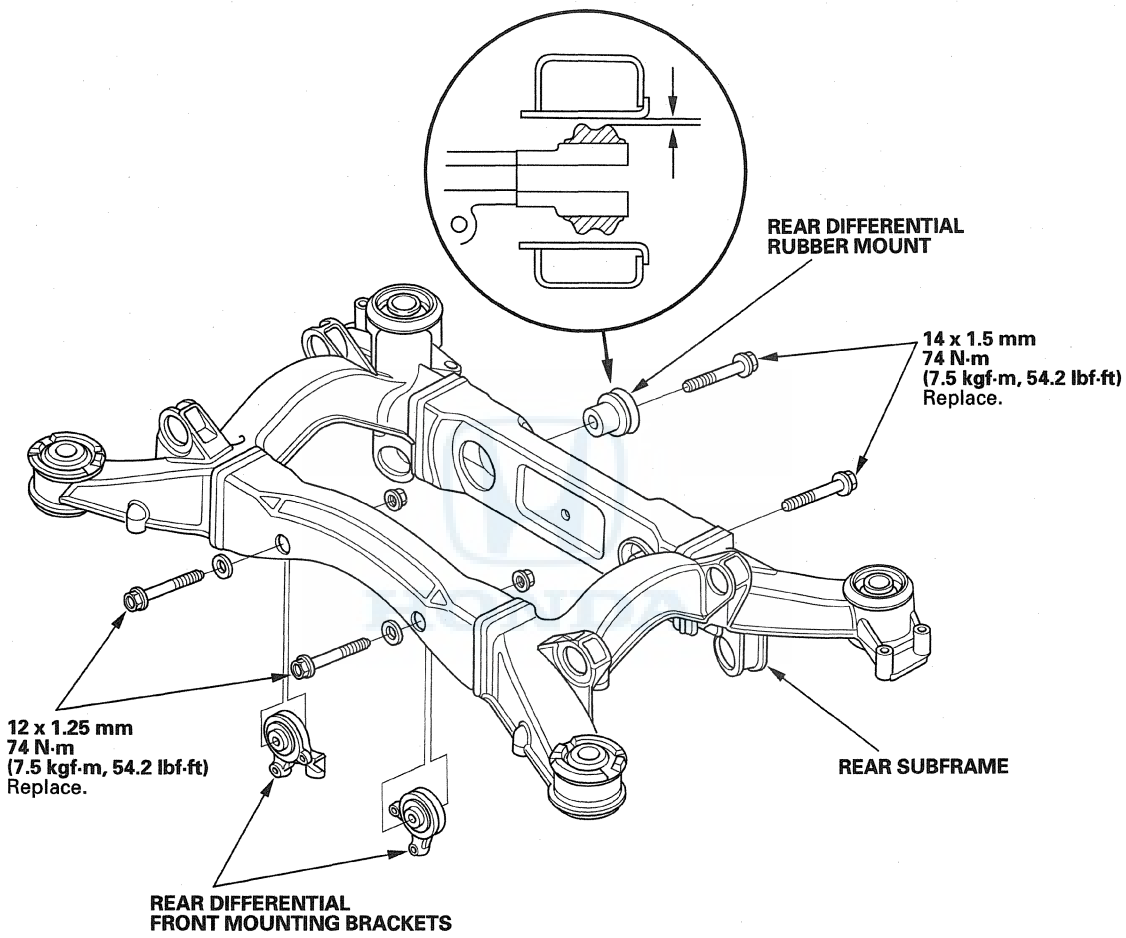

Rear Differential Removal

1. Raise the vehicle on a lift.
2. Drain the rear differential fluid (see page 15-96).
3. Remove the propeller shaft (see page 16-44).
4. Disconnect the rear differential harness connectors (A) and (B).

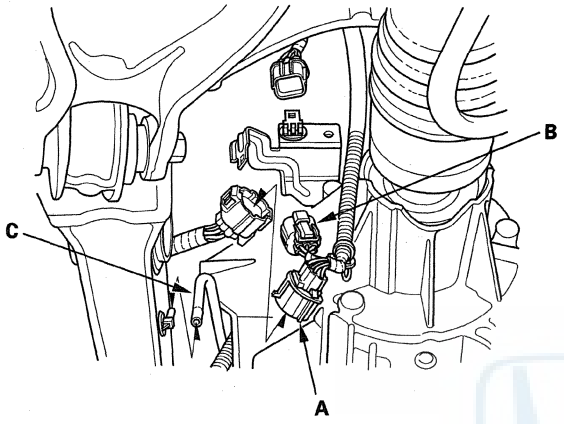

5. Disconnect the breather hose (C).
6. Disconnect the inboard joints (A) from the rear differential (B) using a pair of screwdrivers.

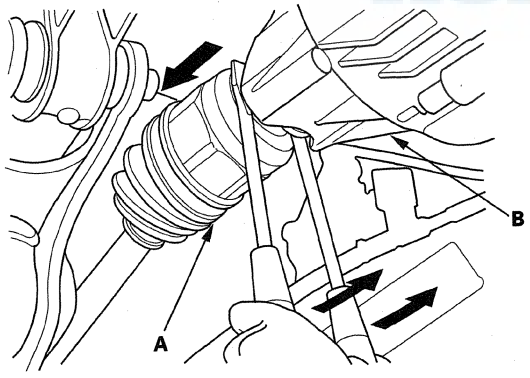

7. Place the transmission jack (A) under the rear differential (B).

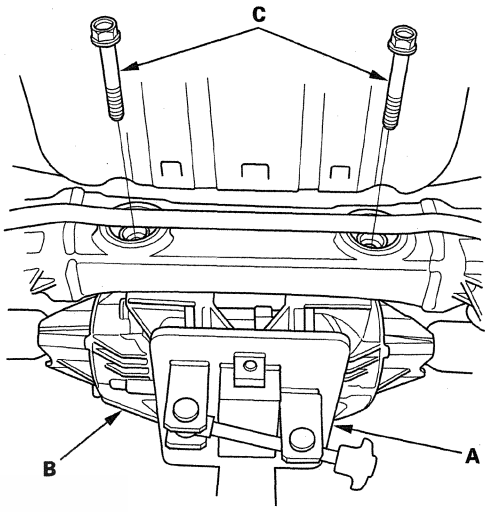

8. Remove the rear differential rear mounting bolts (C).
9. Remove the rear differential front mounting bolts.

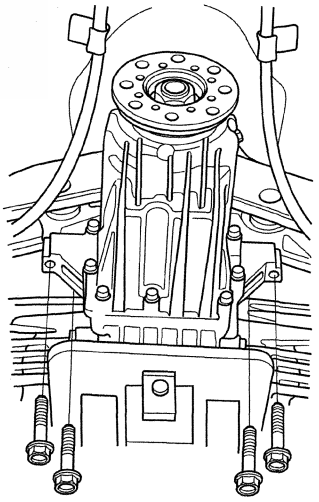

(cont'd)

Rear Differential Removal (cont'd)

10. As you lower the rear differential (A) with the transmission jack, remove the rear driveshaft inboard joints (B) from the rear differential.

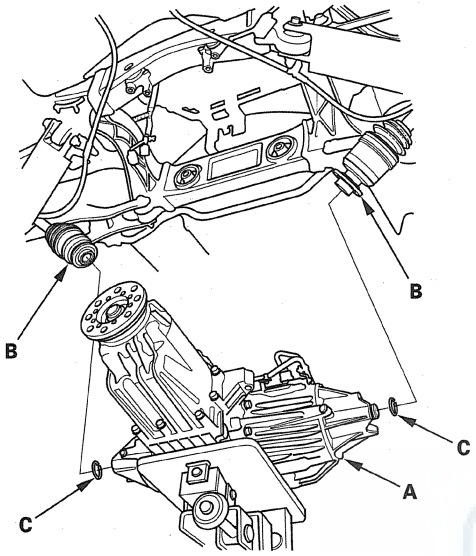

11. Remove the set rings (C) from the rear differential.

Rear Differential Installation

1. Place the rear differential on a transmission jack.

2. Install new set rings (A) into the groove of the rear differential (B).

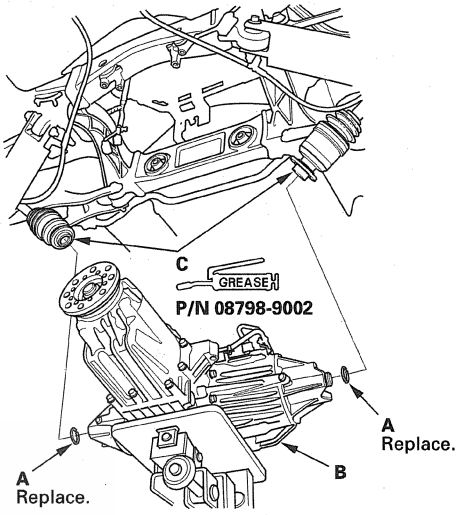

3. Apply appropriate grease to the splines of the rear driveshaft inboard joints (C) (see step 1 on page 16-41).

4. Raise the rear differential to the mounting level, then install the rear driveshaft inboard joints.

5. Install new rear differential front mounting bolts.

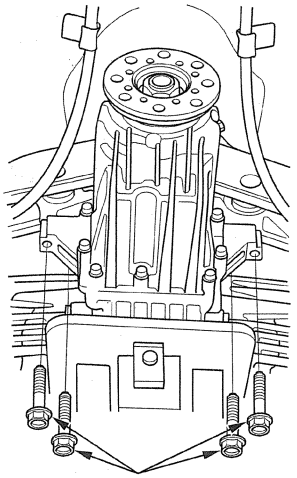

10 x 1.25 mm
30 N·m (3.1 kgf·m, 22 lbf·ft)
Replace.

6. Install new rear differential rear mounting bolts.

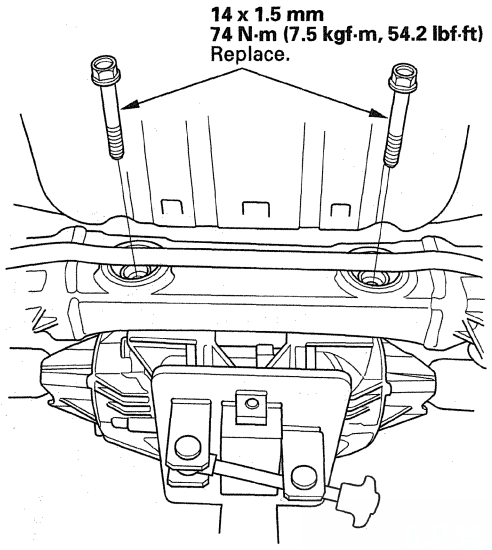

7. Connect the breather hose (A).

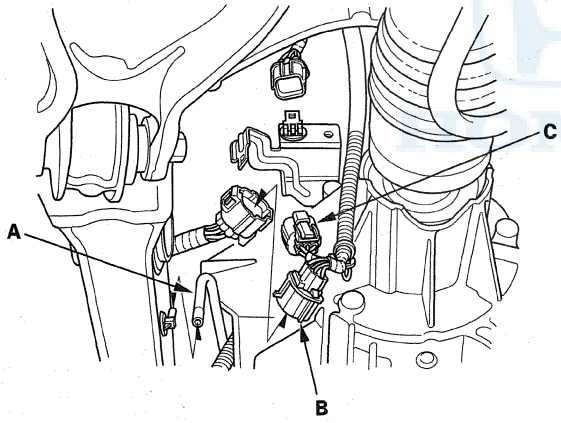

8. Connect the rear differential harness connectors (B) and (C).
9. Install the propeller shaft (see page 16-45).
10. Refill the rear differential fluid (see page 15-96).
11. Test-drive the vehicle.

Rear Differential Disassembly/Reassembly

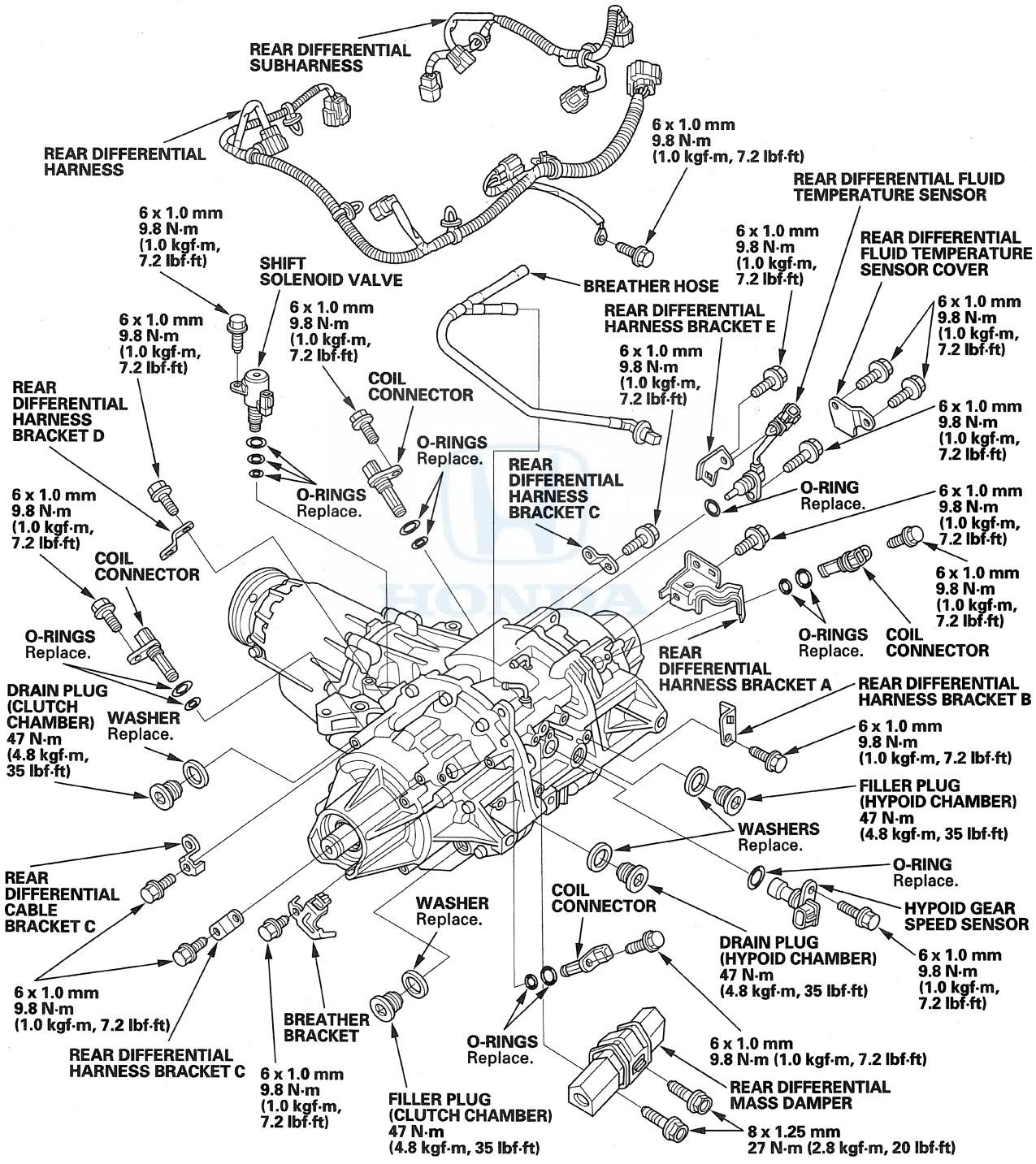

Front Case Oil Seal Replacement

Special Tools Required
- Companion flange holder 07XAB-0010101
- Oil seal driver D 070AD-RJC0140
- Inner driver handle, 40 mm 07746-0030100
- Seal remover, commercially available
- Puller, commercially available

1. Remove the rear differential (see page 15-101).

2. Raise the locknut tab (A) from the groove of the input shaft, making sure that the tab completely clears the groove to prevent damaging the input shaft.

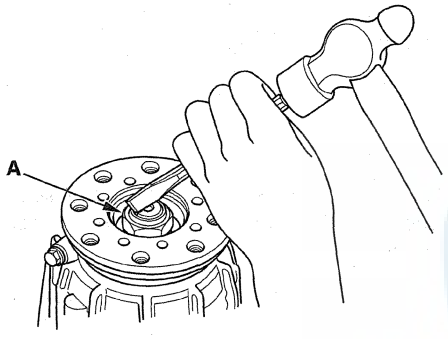

3. Install the companion flange holder on the companion flange.

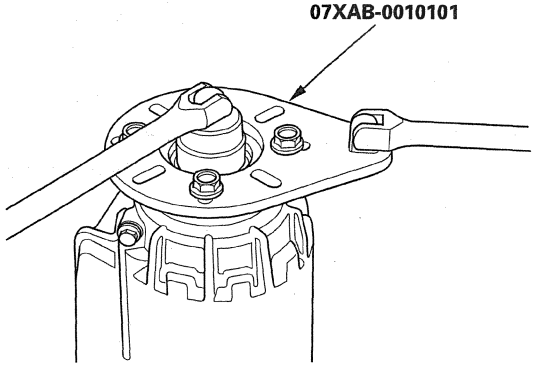

4. Loosen the locknut (A) counterclockwise so that its tab (B) comes out from the groove (C) in the input shaft.

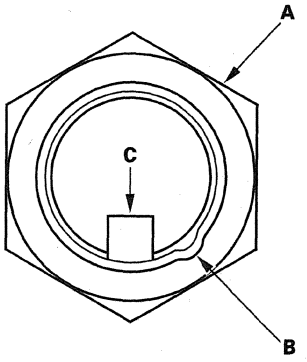

5. Tighten the locknut (A) until its tab (B) aligns with the groove (C).

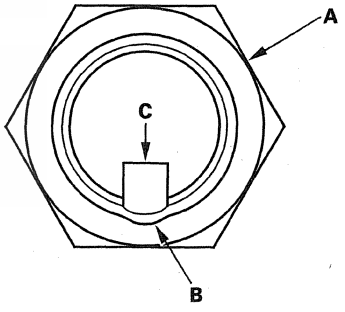

6. Remove any dirt from inside of the groove in the input shaft, then loosen the locknut.

(cont'd)

Front Case Oil Seal Replacement (cont'd)

7. Remove the 22 mm locknut (A), the 22 mm spring washer (B), the 23 mm back-up ring (C), and the 23 mm O-ring (D).

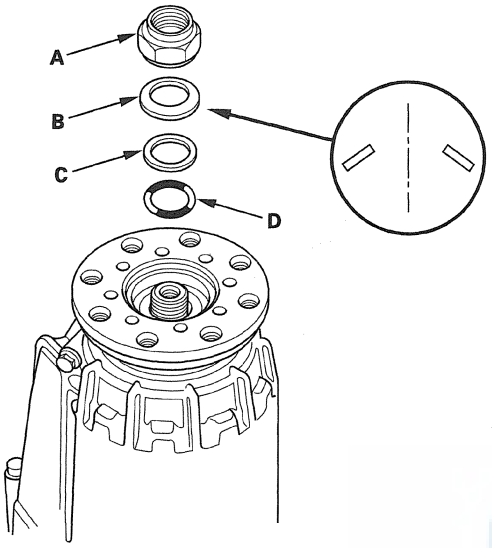

8. Make marks (A) across the companion flange (B) and the input shaft (C).

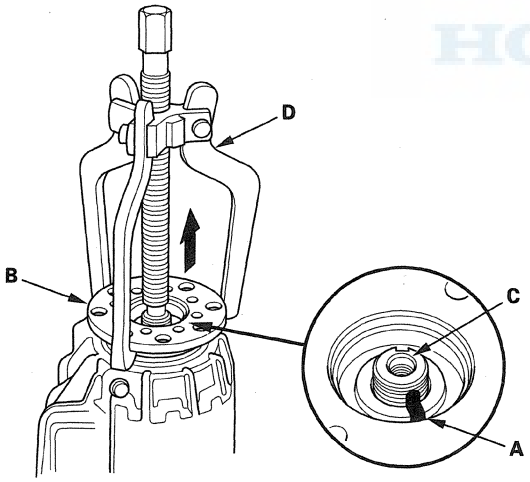

9. Remove the companion flange using a commercially available puller (D).

10. Remove the 38 x 67 x 9 mm front case oil seal (A) using a commercially available seal remover.

NOTE: Remove the oil seal with care so you do not damage the inside surface of the front case oil seal surface.

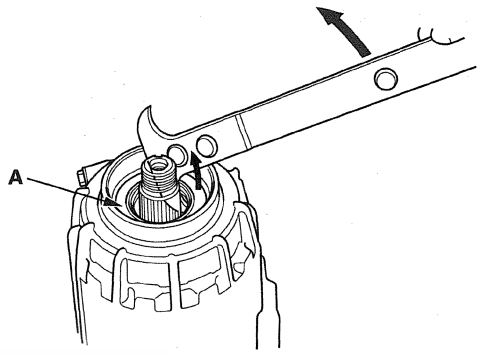

11. Install a new 38 x 67 x 9 mm front case oil seal (A) using the oil seal driver D and the 40 mm inner driver handle.

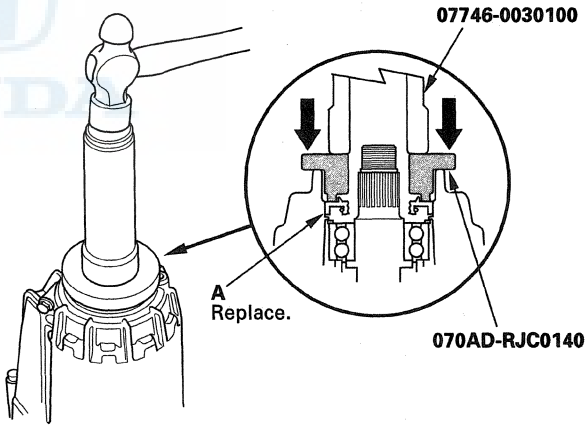

12. Set the companion flange (A) onto the front case (B) by aligning the reference mark (C), then install the 36 mm socket (D), the 8 mm flange bolt (E), and the 8 mm nut (F) as shown.

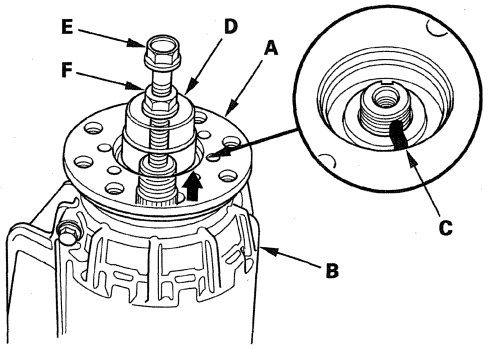

13. Tighten the 8 mm nut, then install the companion flange.

14. Install a new 23 mm O-ring (A), the 23 mm back-up ring (B), the 22 mm spring washer (C), and a new 22 mm locknut (D).

NOTE: Apply ATF to the 23 mm O-ring.

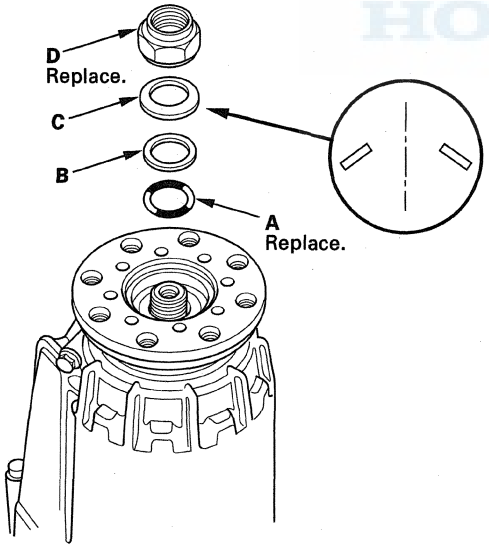

15. Install the companion flange holder to the companion flange, then tighten the 22 mm locknut to the specified torque.

TORQUE: 118 N·m (12.0 kgf·m, 87 lbf·ft)

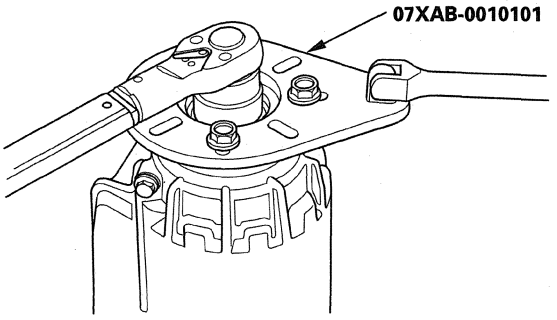

16. Stake the locknut shoulder (A) into the groove in the input shaft.

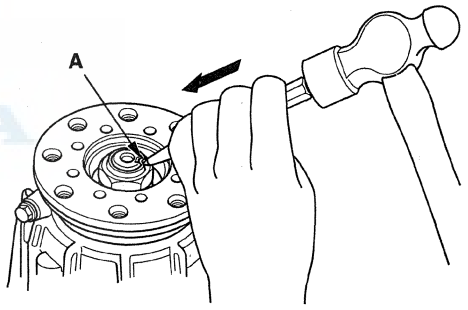

17. Install the rear differential (see page 15-102).

Center Case Front Oil Seal Replacement

Special Tools Required
- Companion flange holder 07XAB-0010101
- Oil seal driver E 070AD-RJC0150
- Inner driver handle, 40 mm 07746-0030100
- Puller, commercially available
- Seal remover, commercially available

1. Remove the rear differential (see page 15-101).

2. Raise the locknut tab (A) from the groove of the input shaft, making sure that the tab completely clears the groove to prevent damaging the input shaft.

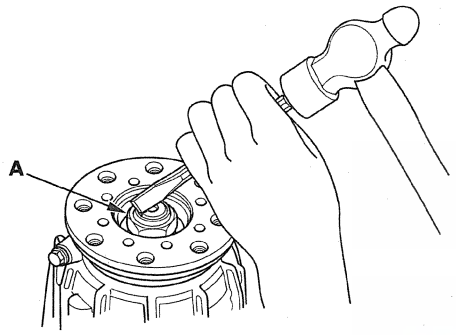

3. Install the companion flange holder on the companion flange.

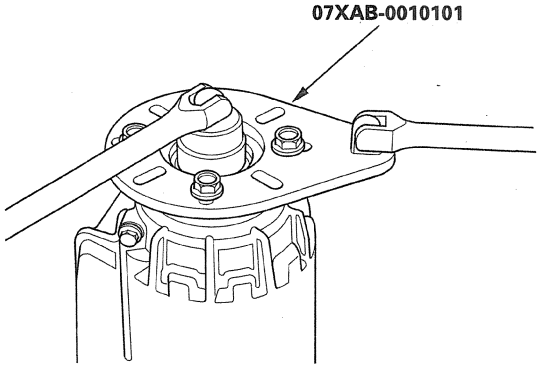

4. Loosen the locknut (A) counterclockwise so that its tab (B) comes out from the groove (C) in the input shaft.

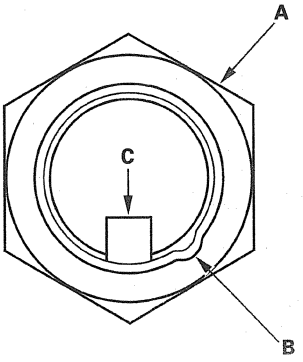

5. Tighten the locknut (A) until its tab (B) aligns with the groove (C).

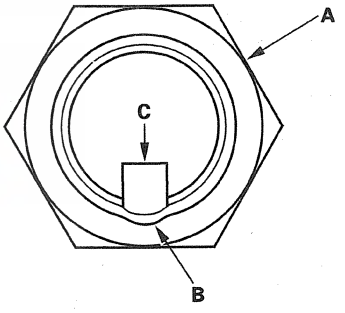

6. Remove any dirt from inside of the groove in the input shaft, then loosen the locknut.

7. Remove the 22 mm locknut (A), the 22 mm spring washer (B), the 23 mm back-up ring (C), and the 23 mm O-ring (D).

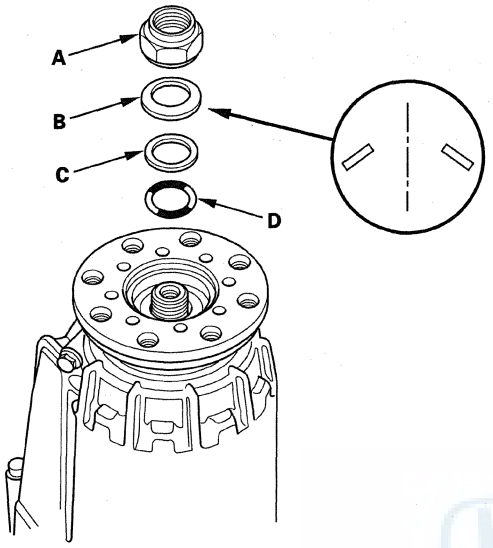

8. Make marks (A) across the companion flange (B) and the input shaft (C).

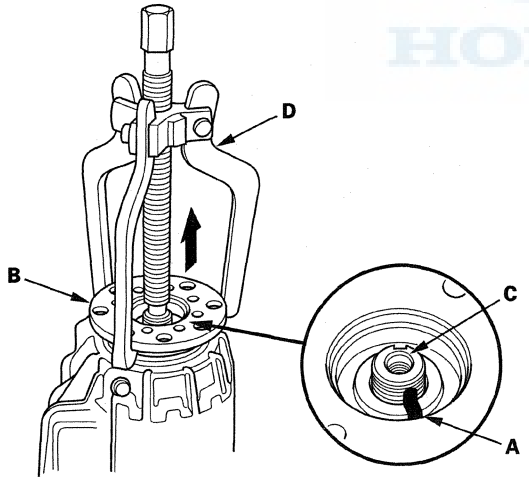

9. Remove the companion flange using a commercially available puller (D).

10. Remove the three 8 x 50 mm flange bolts and the six 8 x 35 mm flange bolts in a crisscross pattern in several steps, then remove the front case (A), the 8 x 14 mm dowel pins (B), and the 8 x 130 mm pipe (C).

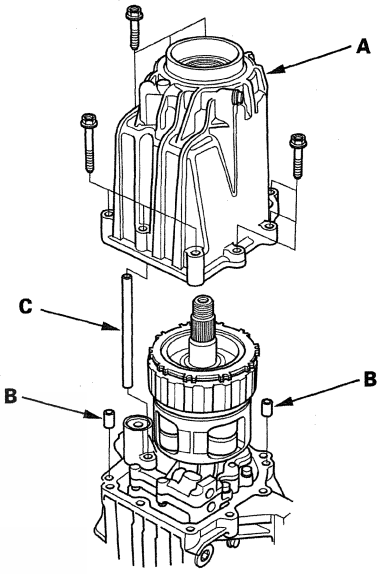

11. Remove the high clutch (A).

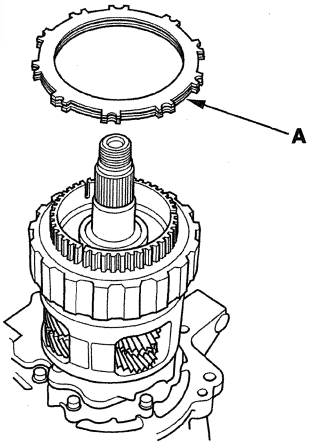

(cont'd)

Center Case Front Oil Seal Replacement (cont'd)

12. Secure the input shaft (A), low clutch (B), and planetary carrier (C) together as an assembly with a piece of wire, then remove the assembly.

    NOTE: Do not remove the input shaft from the low clutch and planetary carrier, because aligning the input shaft splines with the other components may be difficult.

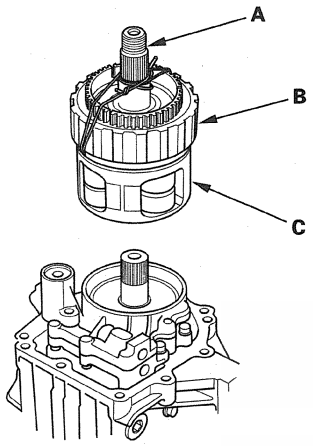

13. Remove the oil pump assembly (A), then remove the two 8 x 51.5 mm pipes (B), and the two 8 x 35 mm pipes (C).

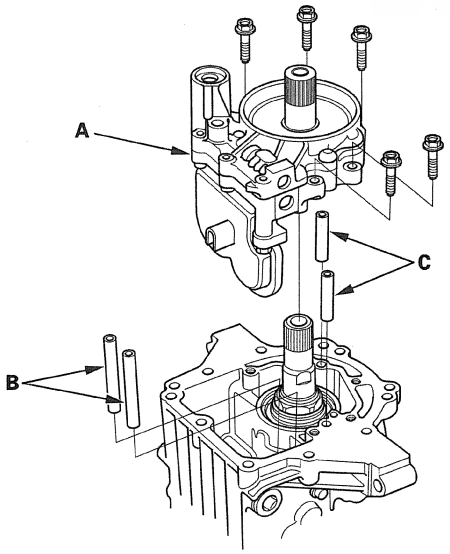

14. Remove the 45 x 67 x 6.5 mm oil seal (A) using a commercially available seal remover.

    NOTE: Remove the oil seal with care so you do not damage the inside surface of the center case front oil seal surface.

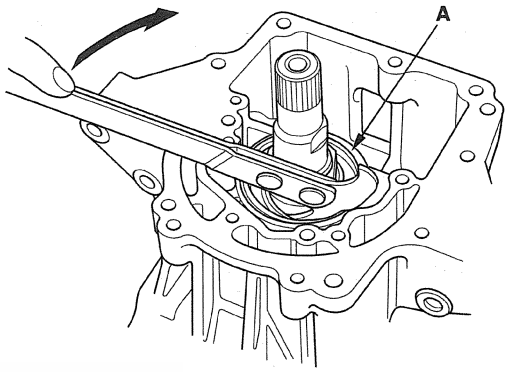

15. Remove the 45 x 65 x 6.5 mm oil seal (A) using a commercially available seal remover.

    NOTE: Remove the oil seal with care so you do not damage the inside surface of the center case front oil seal surface.

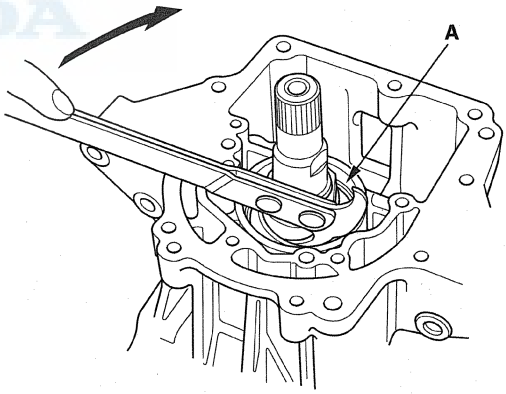

16. Install a new 45 x 65 x 6.5 mm oil seal (A) using the oil seal driver E and the 40 mm driver handle.

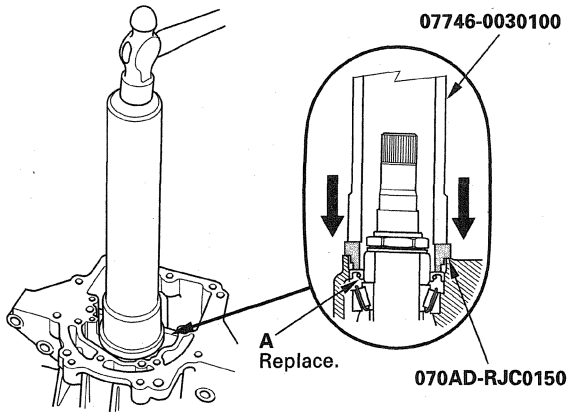

17. Install a new 45 x 67 x 6.5 mm oil seal (A) with the oil seal driver E and the 40 mm driver handle.

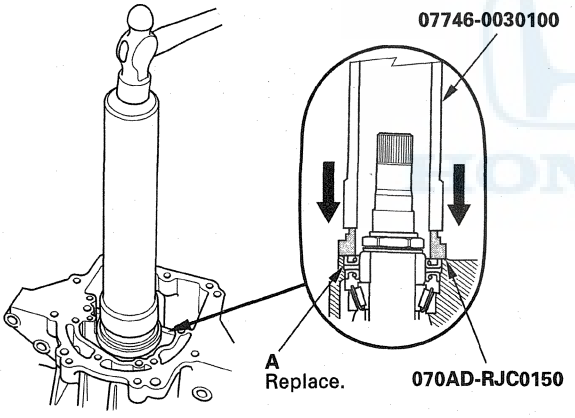

18. Install the two 8 x 51.5 mm pipes (A), the two 8 x 35 mm pipes (B), and the oil pump assembly (C).

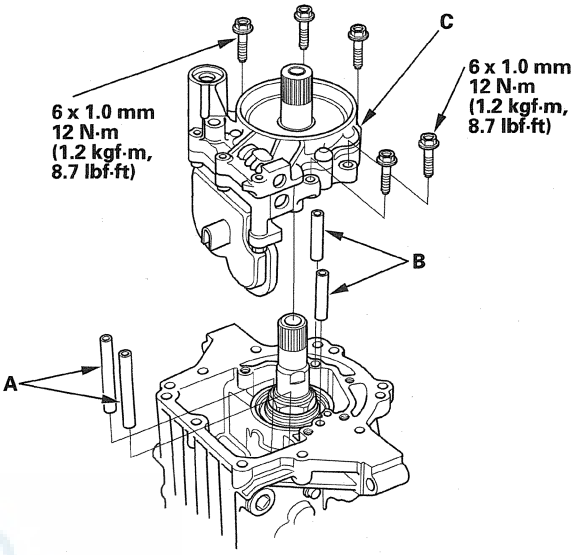

19. Install the planetary carrier (A), low clutch (B) and input shaft (C) as an assembly, then remove the wire.

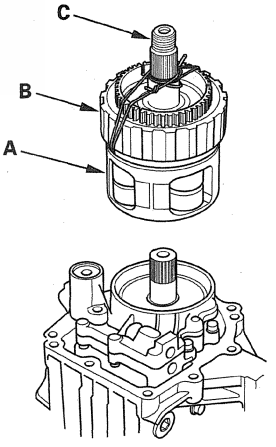

(cont'd)

Center Case Front Oil Seal Replacement (cont'd)

20. Install the high clutch (A).

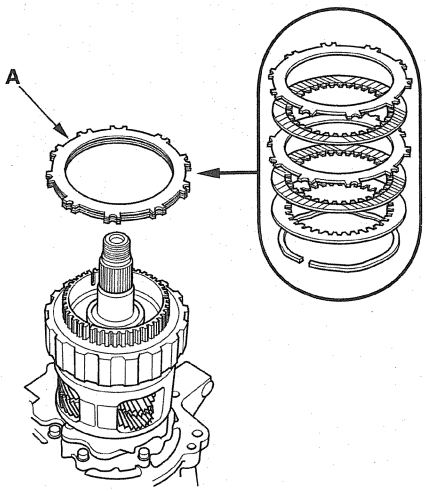

21. Remove the dirt and oil from the sealing surface. Apply liquid gasket (P/N 08717-0004, 08718-0001, 08718-0003, or 08718-0009) to the sealing surface. Make sure you seal up to the inside edge of the bolt holes to prevent oil leakage.

    NOTE:
    - You must assemble the housings within 5 minutes after applying the liquid gasket. If you applied liquid gasket P/N 08718-0012, the component must be installed within 4 minutes. If not, the sealing surface must be cleaned, and the liquid gasket reapplied.
    - Allow liquid gasket to cure at least 30 minutes after assembly before filling the differential with fluid.

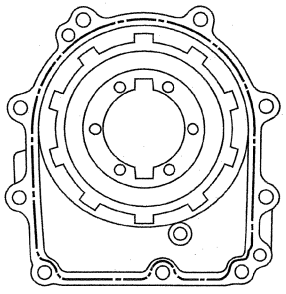

——— Apply liquid gasket along the broken line and around all bolt holes.

22. Install the two 8 x 14 mm dowel pins (A) and the 8 x 130 mm pipe (B).

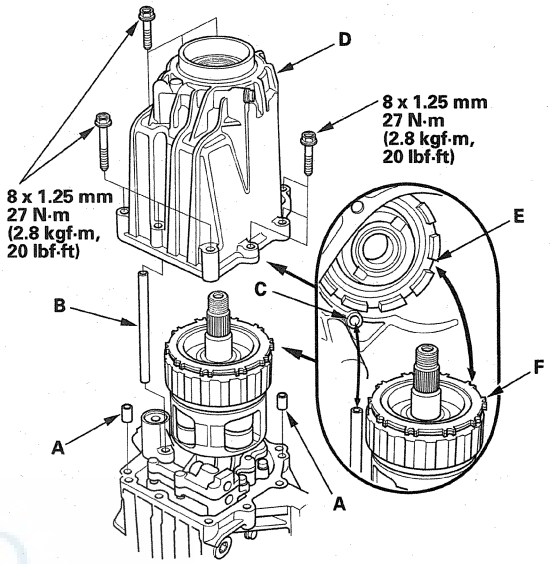

23. Align the hole (C) of the front case (D) with the 8 x 130 mm pipe. Align the groove (E) of the front case with the high clutch tabs (F), then install the front case onto the center case.

24. Tighten the flange bolts in a crisscross pattern in several steps, then tighten the bolts to the specified torque.

25. Set the companion flange (A) onto the front case (B) by aligning the reference mark (C), then install the 36 mm socket (D), the 8 mm flange bolt (E), and the 8 mm nut (F) as shown.

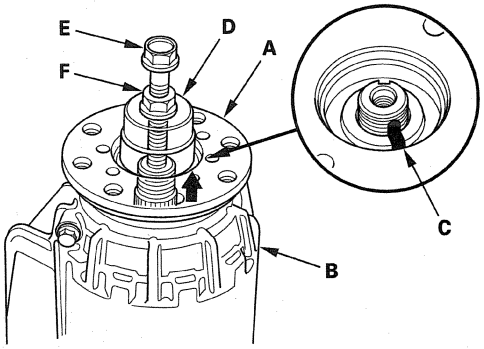

26. Tighten the 8 mm nut, then install the companion flange.

27. Install a new 23 mm O-ring (A), the 23 mm back-up ring (B), the 22 mm spring washer (C), and a new 22 mm locknut (D).

    NOTE: Apply ATF to the 23 mm O-ring.

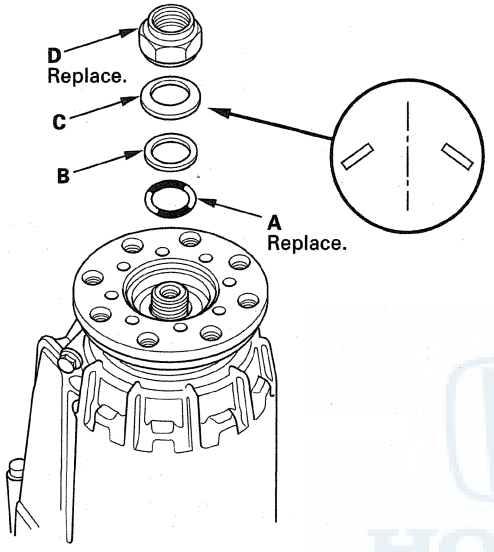

28. Install the companion flange holder to the companion flange, then tighten the 22 mm locknut to the specified torque.

    TORQUE: 118 N·m (12.0 kgf·m, 87 lbf·ft)

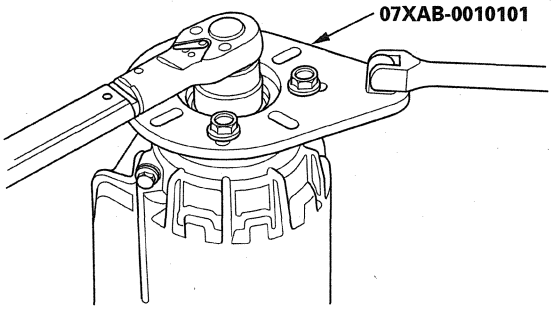

29. Stake the locknut shoulder (A) into the groove in the input shaft.

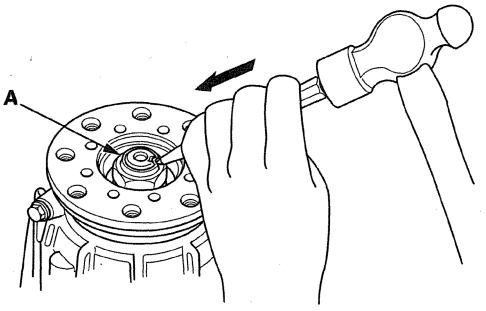

30. Install the rear differential (see page 15-102).

Side Case Oil Seal Replacement

Special Tools Required
- Oil seal driver C 070AD-RJC0130
- Driver, 56 x 62 mm 070AD-PYZA100
- Seal remover, commercially available

1. Remove the rear differential (see page 15-101).

2. Remove the 40 x 72 x 7.5 mm dust seal (A) using a commercially available seal remover.

   NOTE: Remove the dust seal with care so you do not damage the inside surface of the side case dust seal surface.

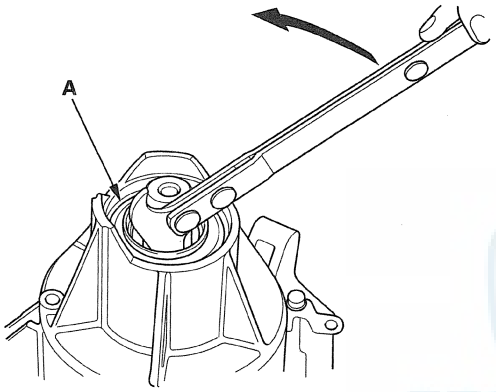

3. Remove the thrust washer.

4. Install a 6 mm screw (P/N 93901-16580) (A) at each ● mark (4 places, 90 degrees apart) (B) of 35.5 x 70 x 9 mm oil seal (C), then remove the 35.5 x 70 x 9 mm oil seal using pliers (D) and a screw driver (E) as shown.

   NOTE: Do not thread the 6 mm screws into the 35.5 x 70 x 9 mm oil seal more than 5 mm (0.20 in).

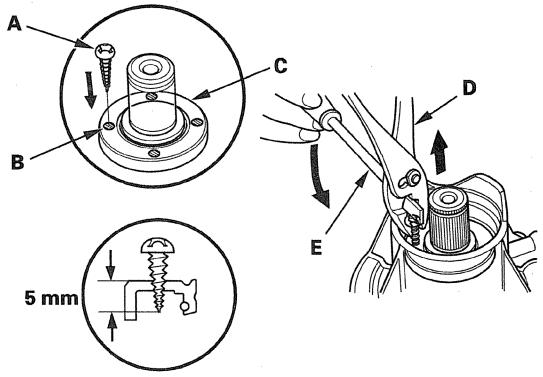

5. Install a new 35.5 x 70 x 9 mm oil seal (A) using the 56 x 62 mm driver and the oil seal driver C.

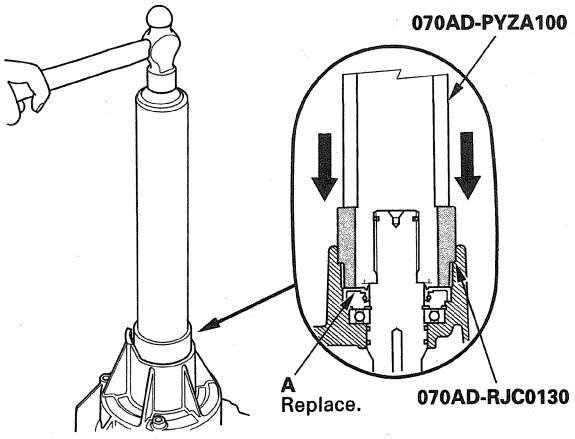

6. Install the thrust washer (A), then install a new 40 x 72 x 7.5 mm dust seal (B) using the 56 x 62 mm driver and the oil seal driver C.

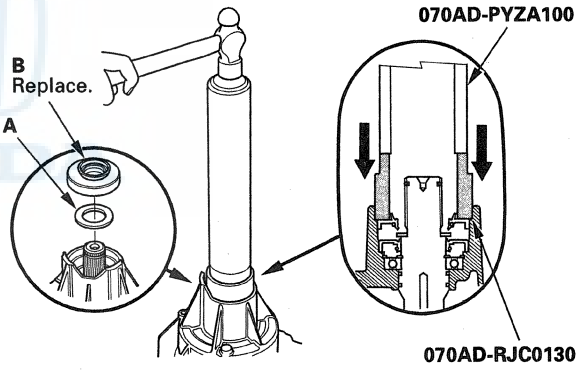

7. Install the rear differential (see page 15-102).

Center Case Side Oil Seal Replacement

Special Tools Required
- Oil seal driver A 070AD-RJC0110
- Oil seal driver B 070AD-RJC0120
- Driver handle 15 x 135L 07749-0010000
- Attachment, 78 x 90 mm 07GAD-SD40101
- Seal remover, commercially available

1. Remove the rear differential (see page 15-101).

2. Remove the rear differential left side case (A), the rear differential right side case (B), the six 8 x 14 mm dowel pins (C), and the two O-rings (D) from the rear differential center case (E).

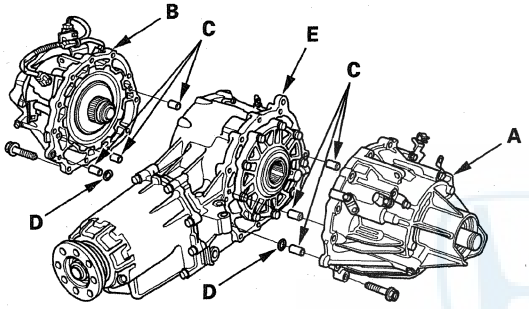

3. Remove the 60 x 89 x 6.5 mm outside oil seal (A) from the rear differential right side center case (B) using a commercially available seal remover.

   NOTE: Remove the oil seal with care so you do not damage the inside surface of the center case side oil seal surface.

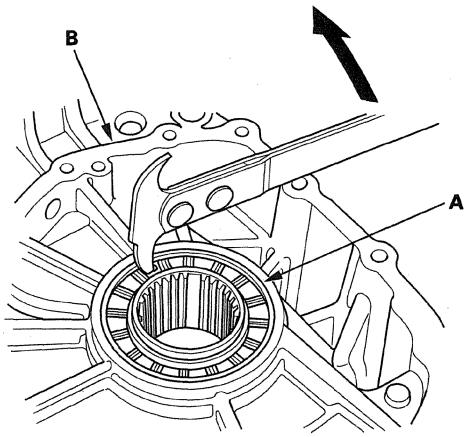

4. Remove the 60 x 80 x 6.5 mm inside oil seal (A) from the rear differential right side center case (B) using a commercially available seal remover.

   NOTE: Remove the oil seal with care so you do not damage the inside surface of the center case side oil seal surface.

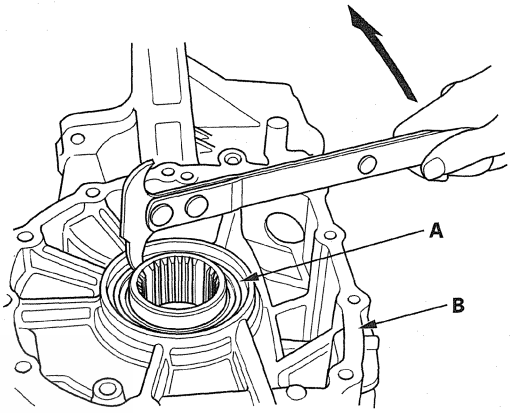

5. Remove the differential carrier cover (A), the 156 x 3.5 mm O-ring (B), the 8 x 14 mm dowel pin (C), and the 7.7 x 2.3 mm O-ring (D).

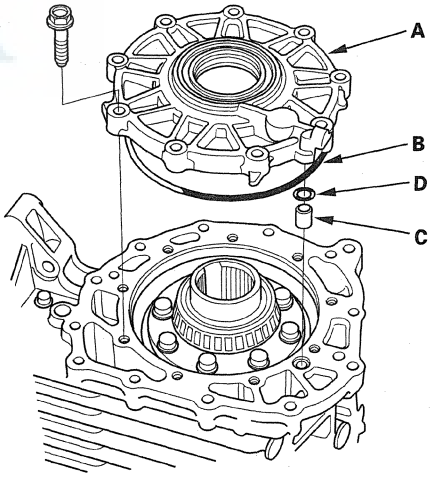

(cont'd)

Center Case Side Oil Seal Replacement (cont'd)

6. Remove the 70 x 100 x 20 mm bearing outer race (A) and 100 mm shim (B) from the differential carrier cover (C) by heating the differential carrier cover to about 212 °F (100 °C) using a heat gun (D). Do not heat the differential carrier cover in excess of 212 °F (100 °C).

   NOTE: Let the differential carrier cover cool to room temperature before installing the bearing outer race.

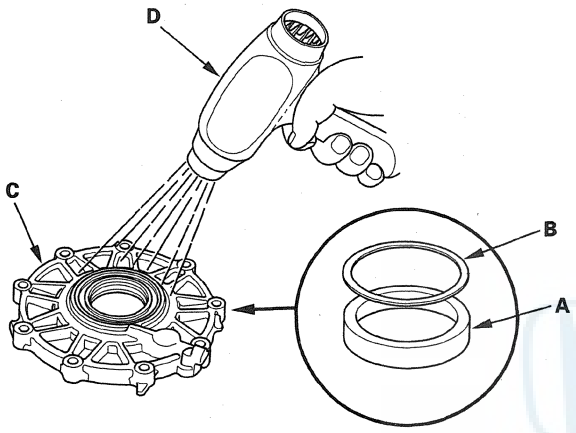

7. Remove the 60 x 89 x 6.5 mm oil seal and the 60 x 80 x 6.5 mm oil seal from the differential carrier cover.

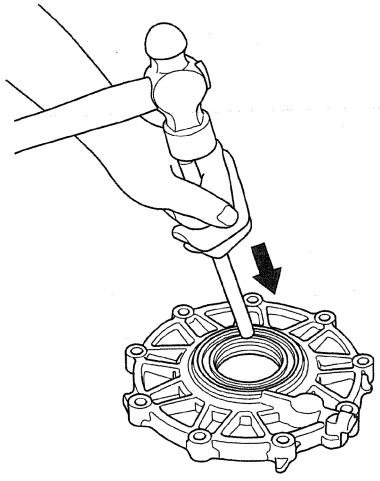

8. Install a new 60 x 80 x 6.5 mm oil seal (A) into the differential carrier cover (B) using the oil seal driver B and the 15 x 135L driver handle.

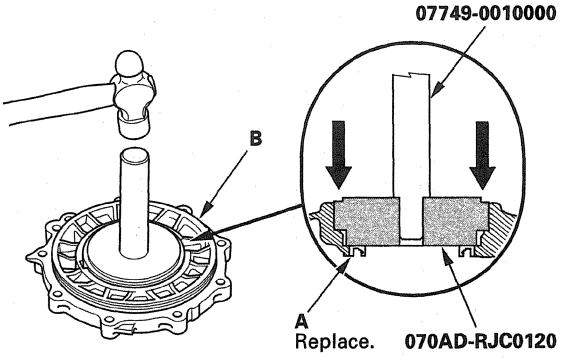

9. Install a new 60 x 89 x 6.5 mm oil seal (A) into the differential carrier cover (B) using the oil seal driver B and the 15 x 135L driver handle.

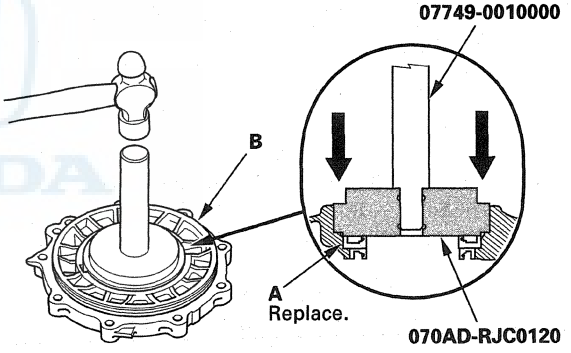

10. Install the 100 mm shim (A) and the 70 x 100 x 20 mm bearing outer race (B) into the differential carrier cover (C) with a press.

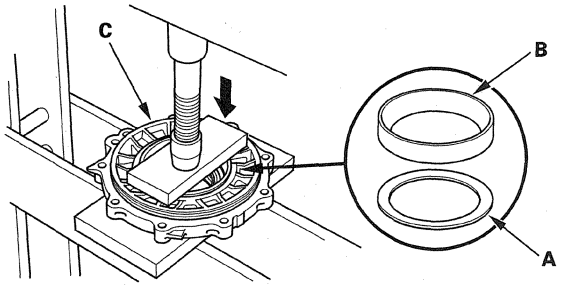

11. Install the 8 x 14 mm dowel pin (A), a new 7.7 x 2.3 mm O-ring (B), a new 156 x 3.5 mm O-ring (C), and the differential carrier cover (D) onto the center case (E).

NOTE: Tighten the mounting bolts in a crisscross pattern in several steps.

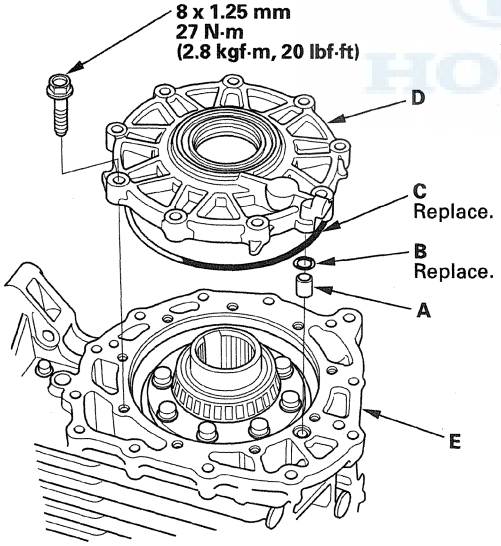

12. Install a new 60 x 80 x 6.5 mm inside oil seal (A) into the rear differential right side center case (B) using the oil seal driver A and the 15 x 135L driver handle, and the 78 x 90 mm attachment.

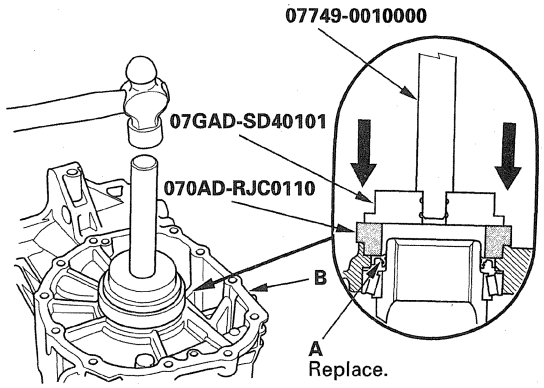

13. Install a new 60 x 89 x 6.5 mm outside oil seal (A) into the rear differential right side center case (B) using the oil seal driver A and the 15 x 135L driver handle, and the 78 x 90 mm attachment.

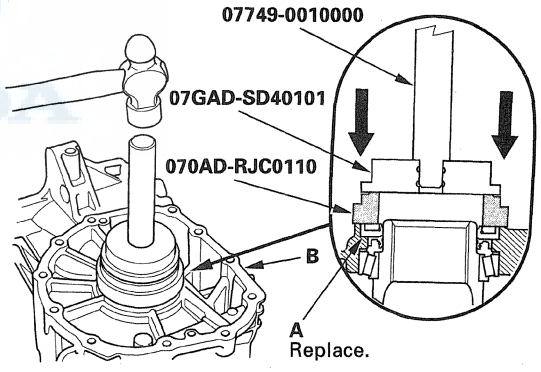

(cont'd)

Center Case Side Oil Seal Replacement (cont'd)

14. Remove the dirt and oil from the sealing surfaces. Apply liquid gasket (P/N 08717-0004, 08718-0001 08718-0003, or 08718-0009) to the sealing surface. Make sure you seal up to the inside edge of the bolt holes to prevent oil leakage.

    NOTE:
    - You must assemble the housings within 5 minutes after applying the liquid gasket. If you applied liquid gasket P/N 08718-0012, the component must be installed within 4 minutes. If not, the sealing surface must be cleaned, and the liquid gasket reapplied.
    - Allow liquid gasket to cure at least 30 minutes after assembly before filling the differential with fluid.

Left side case

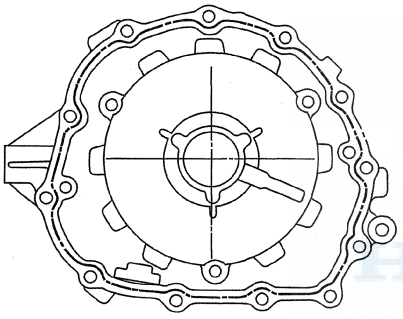

-·——·- Apply liquid gasket along the broken line and around all bolt holes.

Right side case

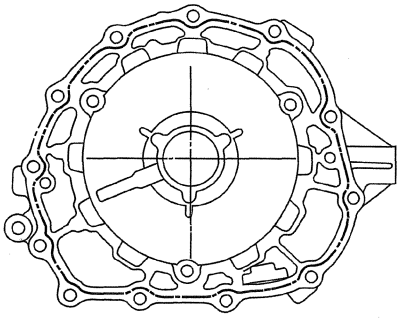

-·——·- Apply liquid gasket along the broken line and around all bolt holes.

15. Install the six 8 x 14 mm dowel pins (A), a new 7.7 x 2.3 mm O-rings (B), the rear differential left side case (C), and the rear differential right side case (D) onto the rear differential center case (E).

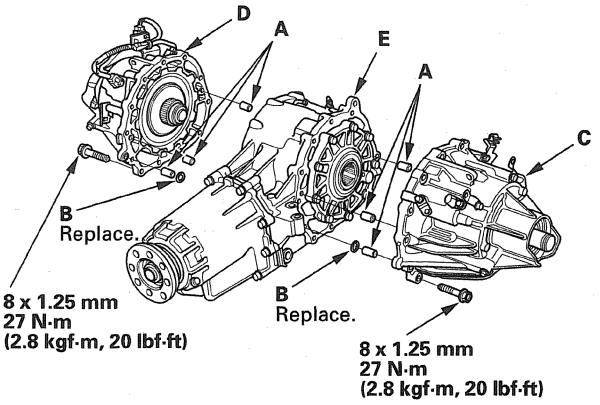

16. Tighten the mounting bolts in a crisscross pattern in several steps, then tighten the bolts to the specified torque.

17. Install the rear differential (see page 15-102).

Center Case Replacement

1. Remove the rear differential (see page 15-101).

2. Remove the rear differential right side case (A), the rear differential left side case (B), the six 8 x 14 mm dowel pins (C), and the O-rings (D) from the rear differential center case (E).

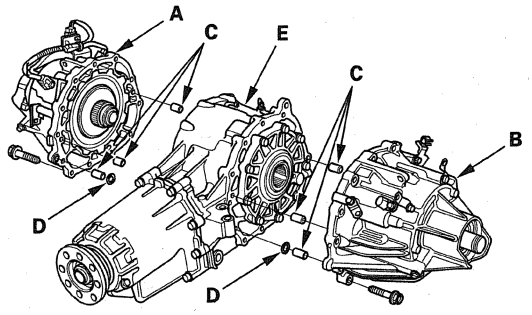

3. Replace a new rear differential center case.

4. Remove the dirt and oil from the sealing surfaces. Apply liquid gasket (P/N 08717-0004, 08718-0001 08718-0003, or 08718-0009) to the sealing surface. Make sure you seal up to the inside edge of the bolt holes to prevent oil leakage.

NOTE:
- You must assemble the housings within 5 minutes after applying the liquid gasket. If you applied liquid gasket P/N 08718-0012, the component must be installed within 4 minutes. If not, the sealing surface must be cleaned, and the liquid gasket reapplied.
- Allow liquid gasket to cure at least 30 minutes after assembly before filling the differential with fluid.

Left side case

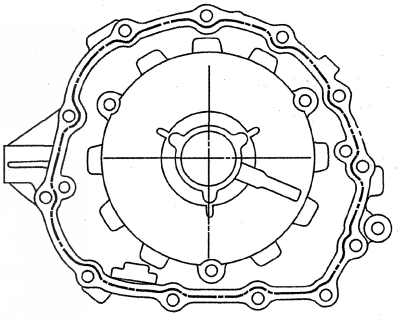

—·—·— Apply liquid gasket along the broken line and around all bolt holes.

Right side case

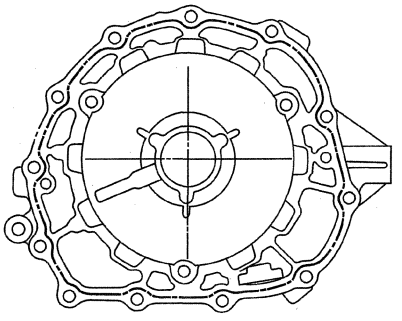

—·—·— Apply liquid gasket along the broken line and around all bolt holes.

(cont'd)

Center Case Replacement (cont'd)

5. Install the six 8 x 14 mm dowel pins (A), a new O-rings (B), the rear differential left side case (C), and the rear differential right side case (D) onto the rear differential center case (E).

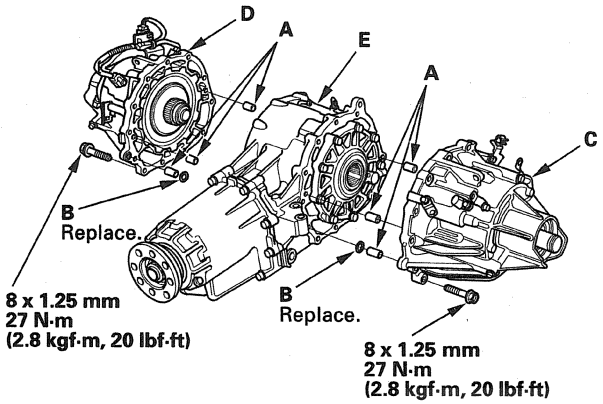

6. Tighten the mounting bolts in a crisscross pattern in several steps, then tighten the bolts to the specified torque.

7. Install the rear differential (see page 15-102).

Side Case Replacement

1. Remove the rear differential (see page 15-101).

2. Remove the rear differential right side case (A), the rear differential left side case (B), the 8 x 14 mm dowel pins (C), and the O-rings (D) from the rear differential center case (E).

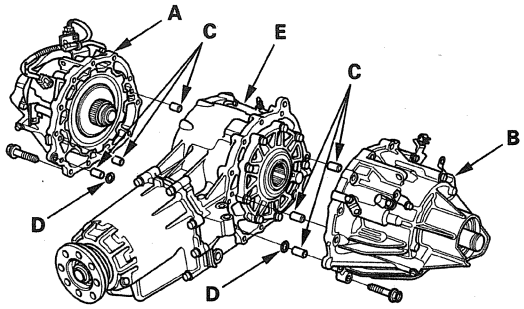

3. Replace a new rear differential left side case and the new rear differential right side case.

4. Remove the dirt and oil from the sealing surfaces. Apply liquid gasket (P/N 08717-0004, 08718-0001 08718-0003, or 08718-0009) to the sealing surface. Make sure you seal up to the inside edge of the bolt holes to prevent oil leakage.

   NOTE:
   - You must assemble the housings within 5 minutes after applying the liquid gasket. If you applied liquid gasket P/N 08718-0012, the component must be installed within 4 minutes. If not, the sealing surface must be cleaned, and the liquid gasket reapplied.
   - Allow liquid gasket to cure at least 30 minutes after assembly before filling the differential with fluid.

Left side case

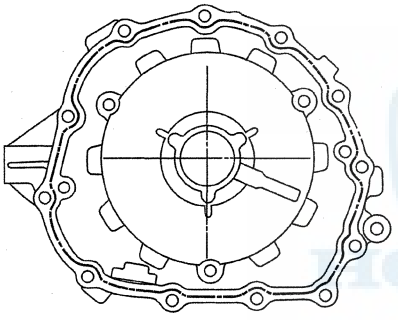

—·—·— Apply liquid gasket along the broken line and around all bolt holes.

Right side case

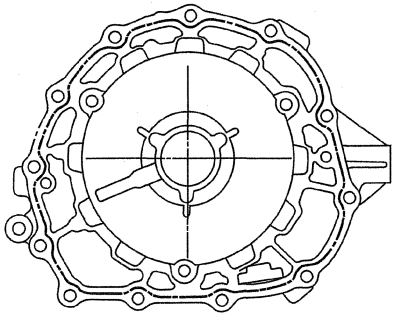

—·—·— Apply liquid gasket along the broken line and around all bolt holes.

5. Install the six 8 x 14 mm dowel pins (A), a new O-rings (B), the rear differential left side case (C), the rear differential right side case (D) onto the rear differential center case (E).

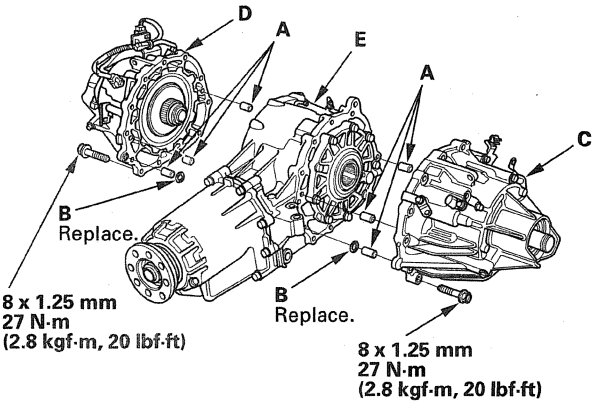

6. Tighten the mounting bolts in a crisscross pattern in several steps, then tighten the bolts to the specified torque.

7. Install the rear differential (see page 15-102).

8. Do the SH-AWD differential clutch torque memorization (see page 15-7).

Driveline/Axle

Driveline/Axle

Special Tools 16-2
Component Location Index 16-3
Driveshaft Inspection 16-4
Front Driveshaft Removal 16-4
Front Driveshaft Disassembly 16-7
Dynamic Damper Replacement 16-10
Front Driveshaft Reassembly 16-11
Front Driveshaft Installation 16-19
Intermediate Shaft Removal 16-22
Intermediate Shaft Disassembly 16-23
Intermediate Shaft Reassembly 16-25
Intermediate Shaft Installation 16-27
Rear Driveshaft Removal 16-28
Rear Driveshaft Disassembly 16-29
Rear Driveshaft Reassembly 16-33
Rear Driveshaft Installation 16-41
Propeller Shaft Inspection 16-42
Propeller Shaft Removal 16-44
Propeller Shaft Installation 16-45

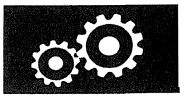

Special Tools

Ref. No.	Tool Number	Description	Qty
①	07JAD-PH80101	Oil Seal Driver Attachment, 58 mm	1
②	07LAD-PW50601	Installer Attachment, 40 mm	1
③	07LAF-SM40300	Base Attachment, 70 mm	1
④	07XAC-001020A	Threaded Adapter, 24 x 1.5 mm	1
⑤	07XAC-001030A	Threaded Adapter, 26 x 1.5 mm	1
⑥	07746-0010300	Bearing Driver Attachment, 42 x 47 mm	1
⑦	07749-0010000	Driver Handle, 15 x 135L	1
⑧	07947-4630100	Fork Seal Driver, 39.2 mm	1
⑨	07965-SD90100	Base 73 x 78/82.6 mm	1

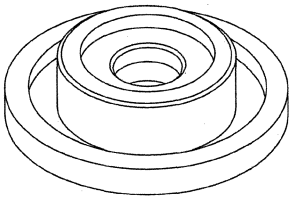

①

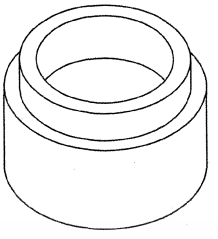

②

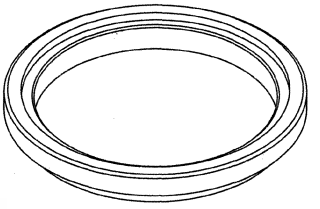

③

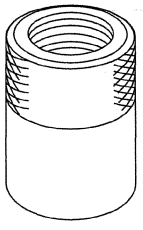

④, ⑤

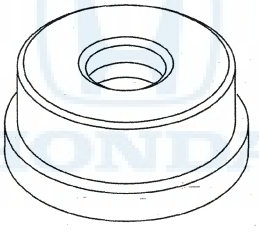

⑥

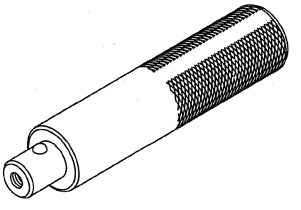

⑦

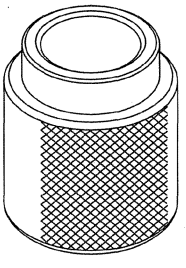

⑧

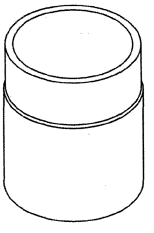

⑨

Component Location Index

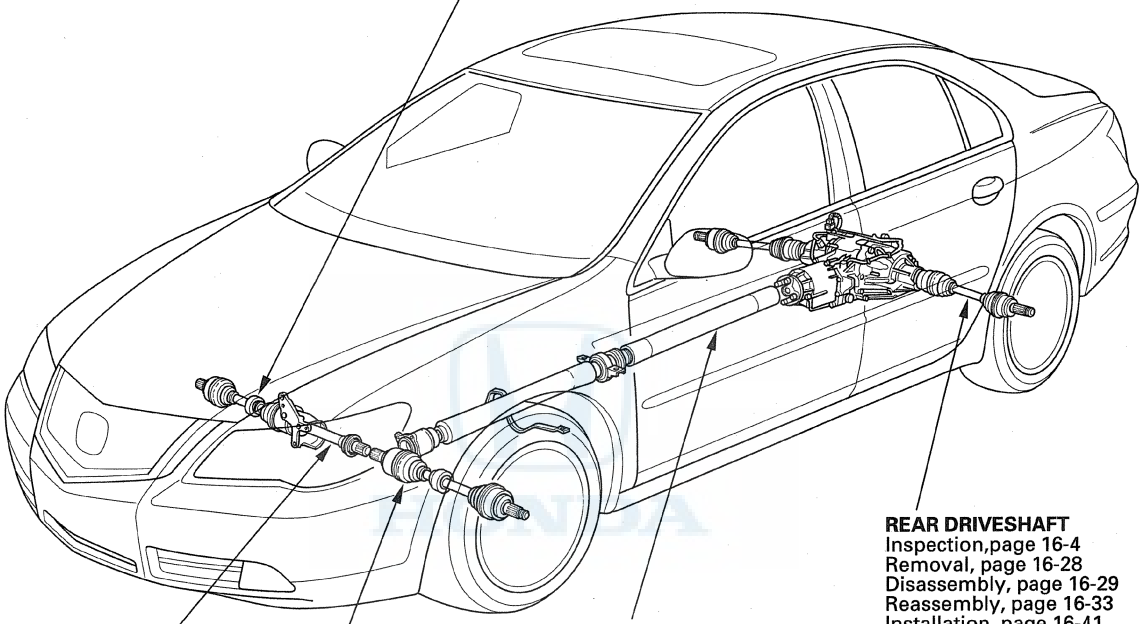

Driveshaft Inspection

1. Check the inboard boot (A) and the outboard boot (B) on the driveshaft (C) for cracks, damage, leaking grease, and loose boot bands (D). If any damage is found, replace the boot and the boot bands.

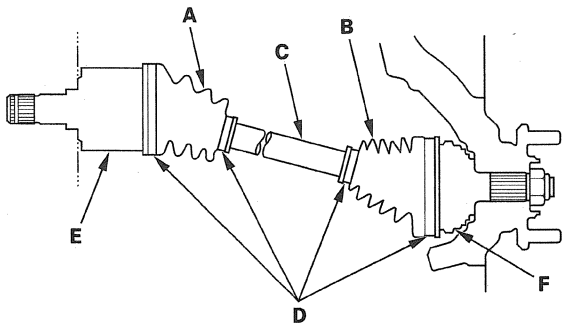

2. Check the driveshaft for cracks and damage. If any damage is found, replace the driveshaft.

3. Check the inboard joint (E) and the outboard joint (F) for cracks and damage. If any damage is found, replace the inboard joint or the outboard joint as an assembly.

4. Hold the inboard joint and turn the wheel by hand, then make sure the joint is not excessively loose. If necessary, replace the inboard joint or the outboard joint as an assembly.

Front Driveshaft Removal

1. Raise the vehicle on a lift.

2. Remove the front wheels.

3. Pry up the stake (A) on the spindle nut (B), then remove the nut.

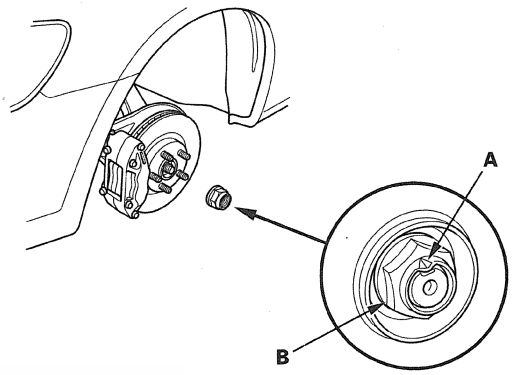

4. Drain the transmission fluid, then reinstall the drain plug with a new sealing washer (see page 14-196).

5. Hold the stabilizer joint pin (A) using a hex wrench (B), and remove the flange nut (C). Separate the front stabilizer link (D) from the lower arm.

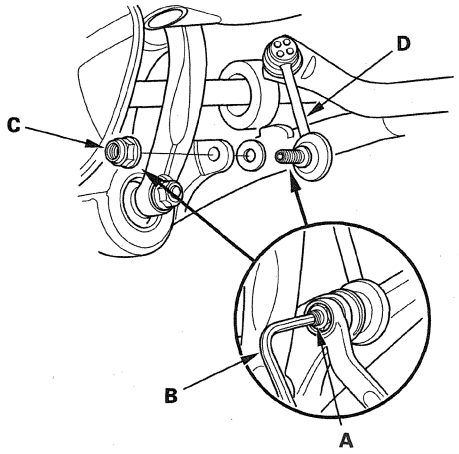

6. Remove the damper fork mounting nut (A), the flange bolt (B), and the damper pinch bolt (C), then remove the damper fork (D).

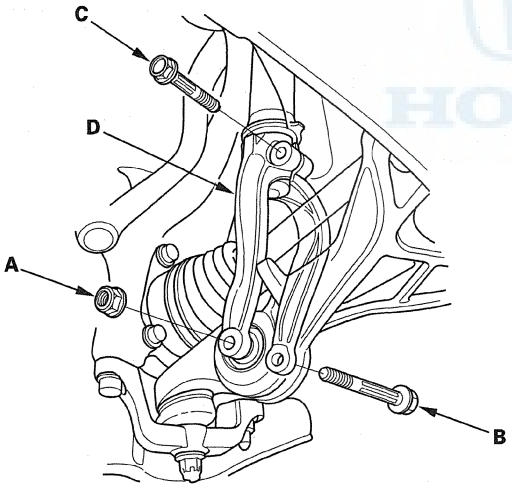

7. Remove the knuckle holder bolt (A) and nut (B).

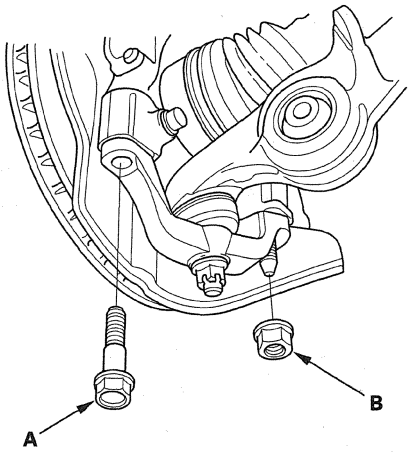

8. Pull the knuckle outward, and separate the outboard joint from the front hub using a plastic hammer.

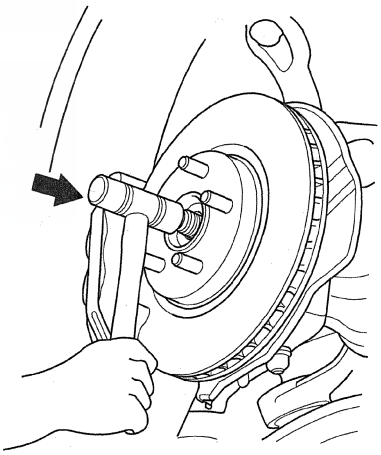

9. Remove exhaust pipe A (see page 9-8).

(cont'd)

Front Driveshaft Removal (cont'd)

10. Left driveshaft: Pry the inboard joint (A) from the differential using a prybar. Remove the driveshaft as an assembly.

    NOTE:
    - Do not pull on the driveshaft (B), or the inboard joint may come apart. Pull the inboard joint straight out to avoid damaging the oil seal.
    - Be careful not to damage the oil seal or the end of the inboard joint with the prybar.

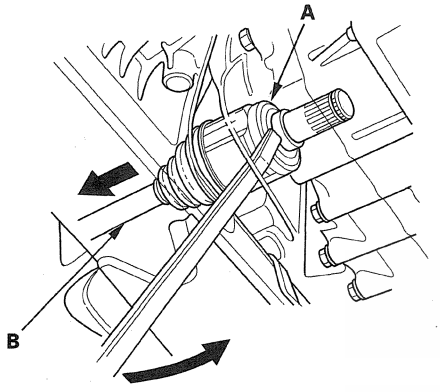

11. Right driveshaft: Drive the inboard joint (A) off of the intermediate shaft using a drift and a hammer. Remove the driveshaft as an assembly.

    NOTE: Do not pull on the driveshaft (B), or the inboard joint may come apart.

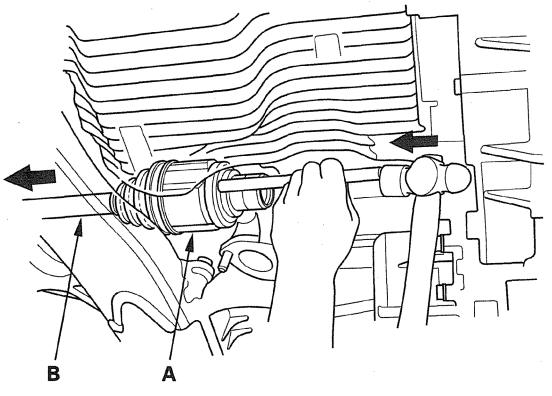

12. Remove the set ring (A) from the left driveshaft inboard joint.

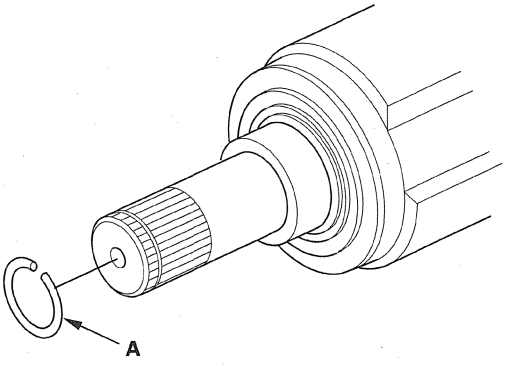

13. Remove the set ring (A) from the intermediate shaft.

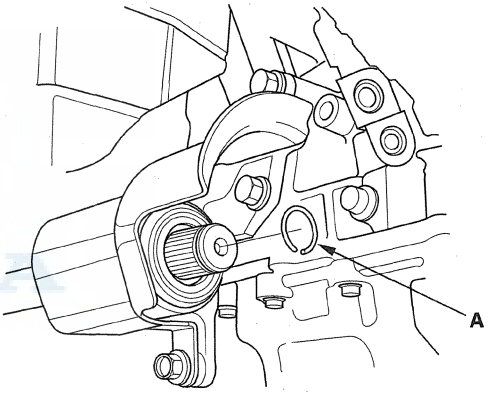

Front Driveshaft Disassembly

Special Tools Required
- Threaded adapter, 26 x 1.5 mm 07XAC-001030A
- Slide hammer, 5/8" x 18 UNF, commercially available
- Puller, commercially available
- Boot band pliers, commercially available

Inboard Joint Side

1. Remove the boot bands. Be careful not to damage the boot.

   - If the boot band is a welded type (A), cut the boot band.
   - If the boot band is a double loop type (B), lift up the band end (C), then push it into the clip (D).
   - If the boot band is a low profile type (E), pinch the boot band using commercially available boot band pliers (F).

Welded type

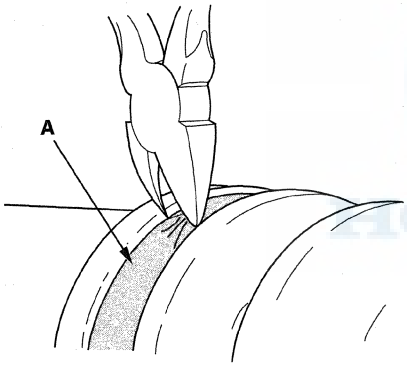

Double loop type

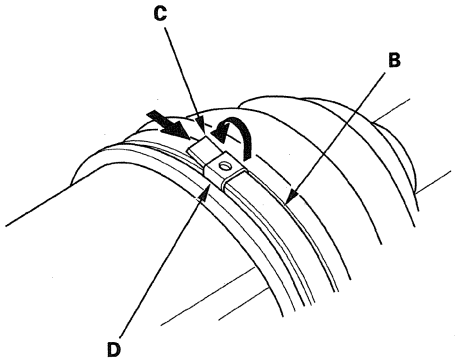

Low profile type

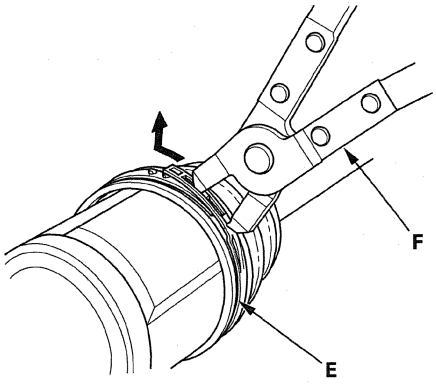

2. Make marks (A) on each roller (B) and the inboard joint (C) to identify the locations of the rollers to the grooves on the inboard joint.

   NOTE: Do not engrave or scribe any marks on the rolling surface.

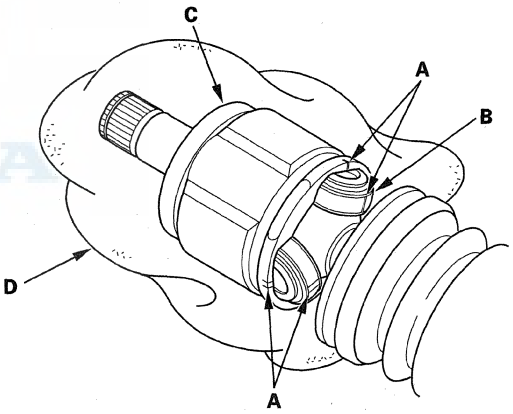

3. Remove the inboard joint on a clean shop towel (D). Be careful not to drop the rollers when separating them from the inboard joint.

(cont'd)

Front Driveshaft Disassembly (cont'd)

4. Make marks (A) on the spider (B) that match the marks on the rollers, then remove the rollers.

   NOTE: Do not engrave or scribe any marks on the rolling surface.

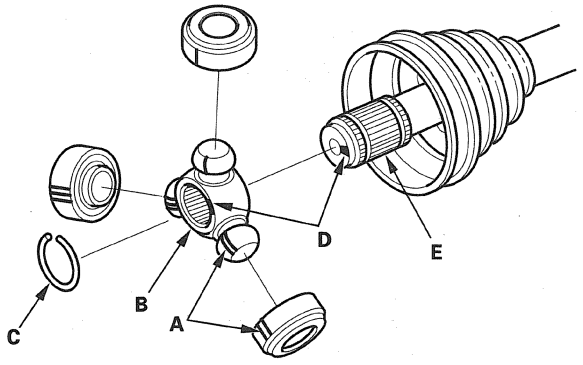

5. Remove the circlip (C).

6. Make marks (D) on the spider and the driveshaft (E) to identify the position of the spider on the shaft.

7. Remove the spider.

   NOTE: If necessary, use a commercially available puller.

8. Wrap the splines on the driveshaft with vinyl tape (A) to prevent damaging the boot.

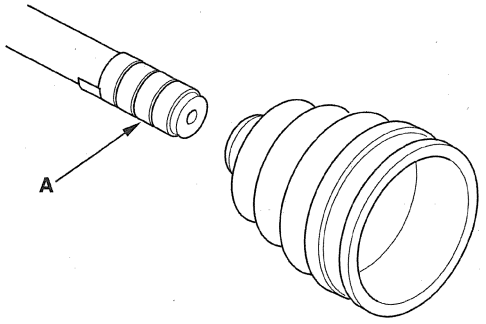

9. Remove the inboard boot. Be careful not to damage the boot.

10. Remove the vinyl tape.

Outboard Joint Side

1. Remove the boot bands (A). Lift up the three tabs (B) using a screwdriver, then release the band. Be careful not to damage the boot.

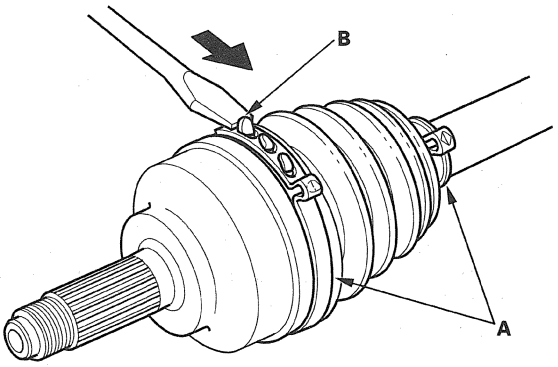

2. Slide the outboard boot (A) partially toward the inboard joint side. Be careful not to damage the boot.

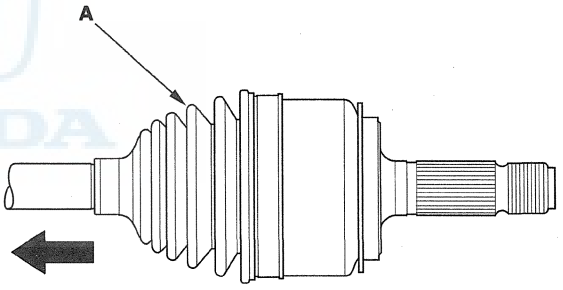

3. Wipe off the grease to expose the driveshaft and the outboard joint inner race.

4. Make a mark (A) on the driveshaft (B) at the same level as the outboard joint end (C).

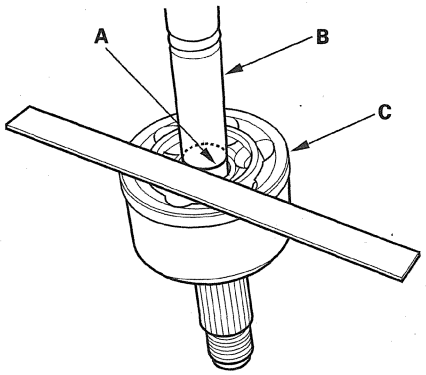

5. Securely clamp the driveshaft in a bench vise with a shop towel.

6. Remove the outboard joint (A) using the 26 x 1.5 mm threaded adapter (B) and a commercially available 5/8" x 18 UNF slide hammer (C).

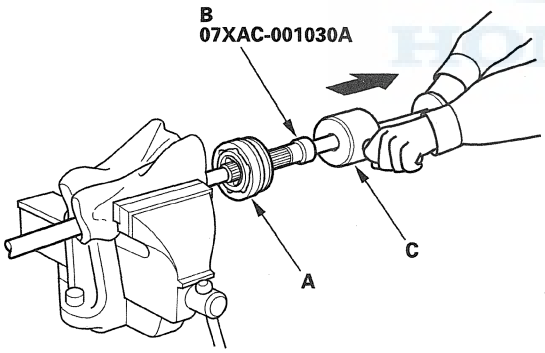

7. Remove the driveshaft from the bench vise.

8. Remove the stop ring from the driveshaft.

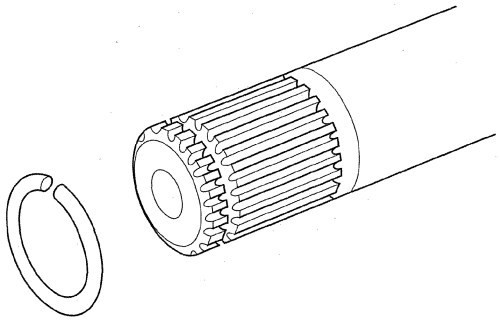

9. Wrap the splines on the driveshaft with vinyl tape (A) to prevent damaging the boot.

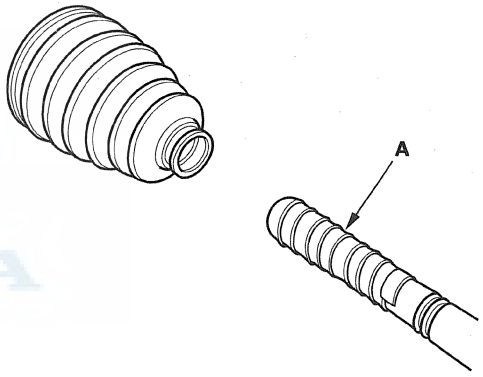

10. Remove the outboard boot. Be careful not to damage the boot.

11. Remove the vinyl tape.

Dynamic Damper Replacement

1. Remove the inboard joint (see page 16-7).
2. Remove the dynamic damper band (see step 1 on page 16-7).
3. Remove the dynamic damper (A).

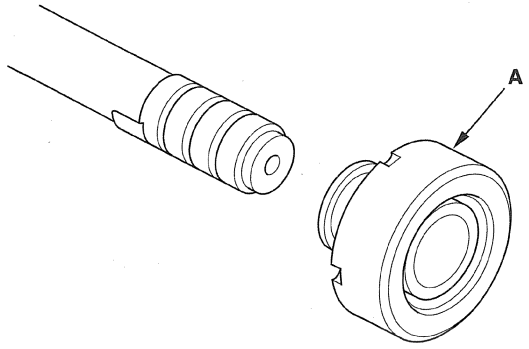

4. Install a new dynamic damper.
5. Adjust the specified distance (A) between the outboard joint side and the dynamic damper edge.

Left driveshaft: **343.5—348.5 mm (13.52—13.72 in)**
Right driveshaft: **325.5—330.5 mm (12.81—13.01 in)**

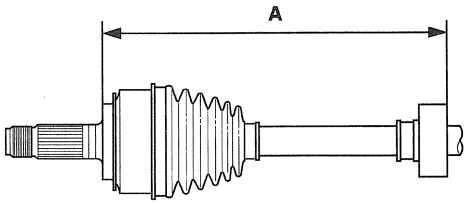

6. Install the dynamic damper band (see step 10 on page 16-14).
7. Install the inboard joint (see page 16-12).

Front Driveshaft Reassembly

Exploded View

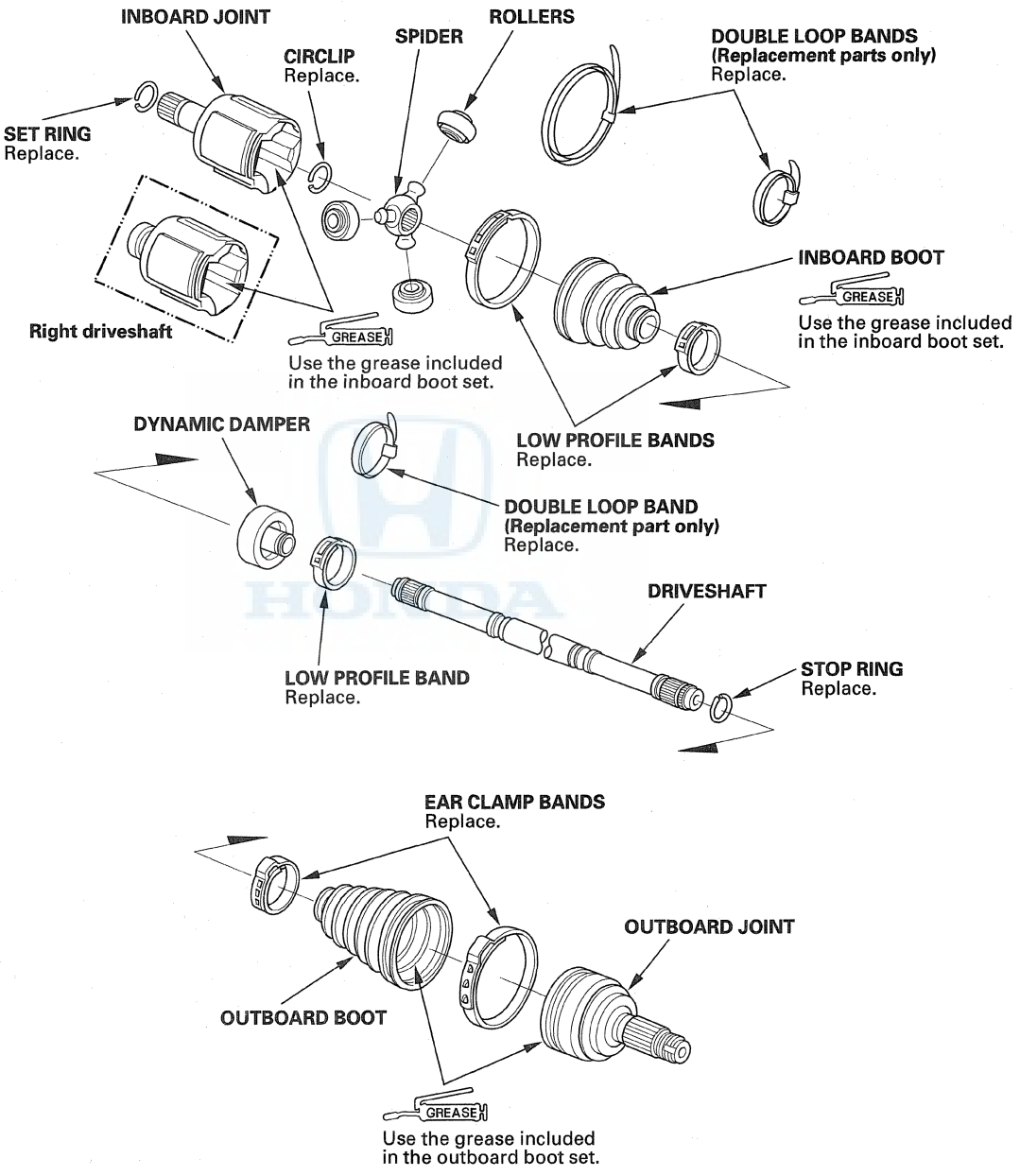

(cont'd)

Front Driveshaft Reassembly (cont'd)

Special Tools Required
- Boot band tool, KD-3191 or equivalent, commercially available
- Seal clamp tool, Kent-Moore J-35910 or equivalent, commercially available
- Boot band pliers, commercially available

NOTE: Refer to the Exploded View, as needed, during this procedure.

Inboard Joint Side

1. Wrap the splines with vinyl tape (A) to prevent damaging the inboard boot.

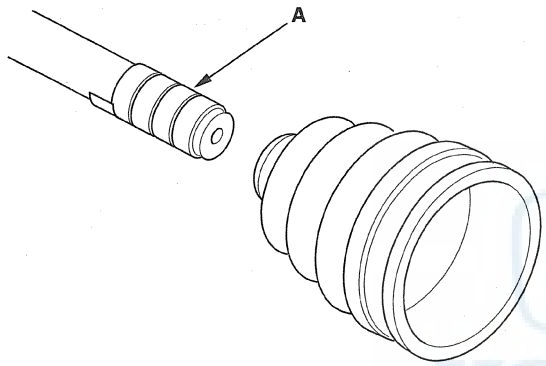

2. Install the inboard boot onto the driveshaft, then remove the vinyl tape. Be careful not to damage the inboard boot.

3. Install the spider (A) onto the driveshaft by aligning the marks (B) you made on the spider and the end of the driveshaft.

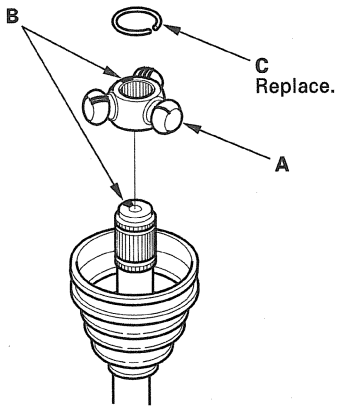

4. Install a new circlip (C) onto the driveshaft groove. Always rotate the circlip in its groove to make sure it is fully seated.

5. Fit the rollers (A) onto the spider (B) as shown and note these items:
   - Reinstall the rollers in their original positions on the spider by aligning the marks (C) you made.
   - Hold the driveshaft pointed up to prevent the rollers from falling off.

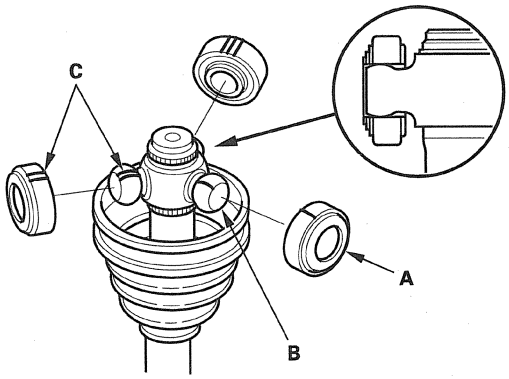

6. Pack the inboard joint with the joint grease included in the new inboard boot set.

Grease quantity
Inboard joint: 110—120 g (3.9—4.2 oz)

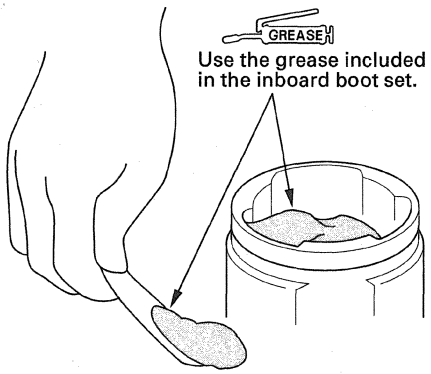

7. Fit the inboard joint onto the driveshaft, and note these items:

- Reinstall the inboard joint onto the driveshaft by aligning the marks (A) you made on the inboard joint and the rollers.
- Hold the driveshaft so the inboard joint is pointing up to prevent it from falling off.

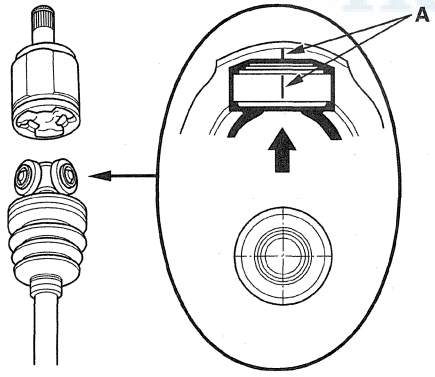

8. Fit the boot ends (A) onto the driveshaft (B) and the inboard joint (C).

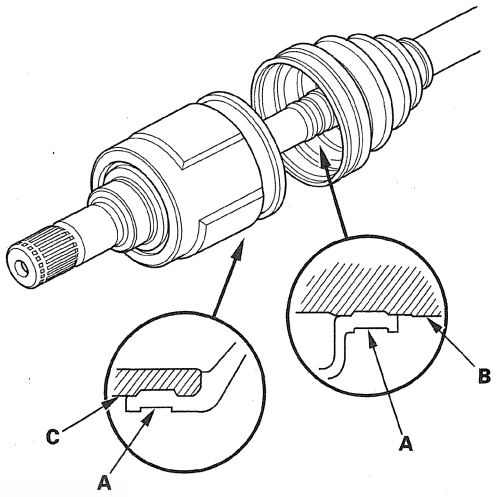

9. Adjust the length (A) of the driveshafts to the figure as shown, then adjust the boots to halfway between full compression and full extension. Bleed excess air from the boots by inserting a flat-tipped screwdriver between the boot and the joint.

Left driveshaft: 549—554 mm (21.61—21.81 in)

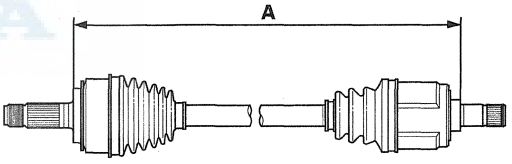

Right driveshaft: 529—534 mm (20.83—21.02 in)

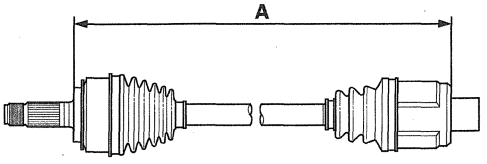

(cont'd)

Front Driveshaft Reassembly (cont'd)

10. Install new boot bands.

    - For the double loop type, go to step 11.
    - For the low profile type, go to step 20.

11. Fit the boot ends onto the driveshaft and the inboard joint, then install a new double loop band (A) onto the boot (B).

    NOTE: Pass the end of the new double loop band through the clip (C) twice in the direction of the forward rotation of the driveshaft.

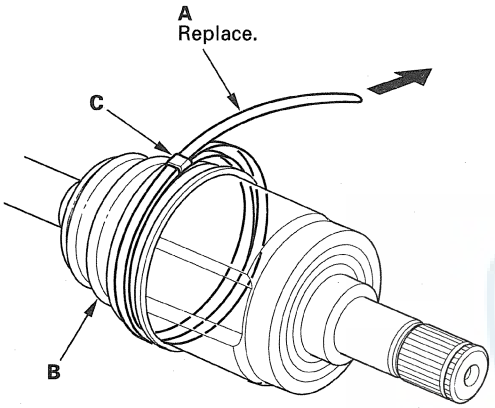

12. Pull up the slack in the band by hand.

13. Mark position (A) on the band 10—14 mm (0.4—0.6 in) from the clip (B).

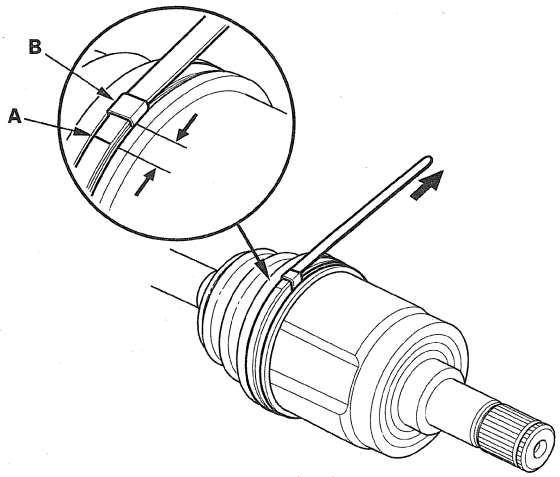

14. Thread the free end of the band through the nose section of the commercially available boot band tool KD-3191 or equivalent (A), and into the slot on the winding mandrel (B).

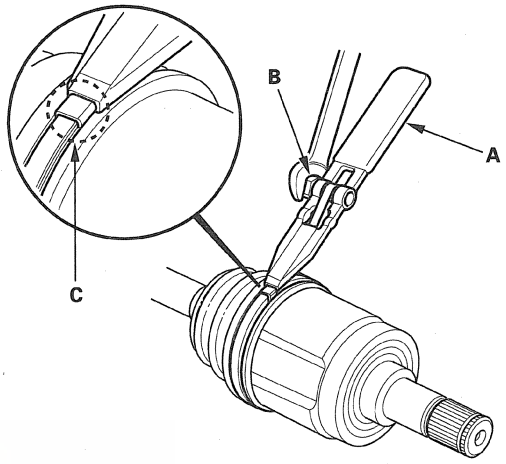

15. Using a wrench on the winding mandrel of the boot band tool, tighten the band until the marked spot (C) on the band meets the edge of the clip.

16. Lift up the boot band tool to bend the free end of the band 90 degrees to the clip. Center-punch the clip, then fold over the remaining tail onto the clip.

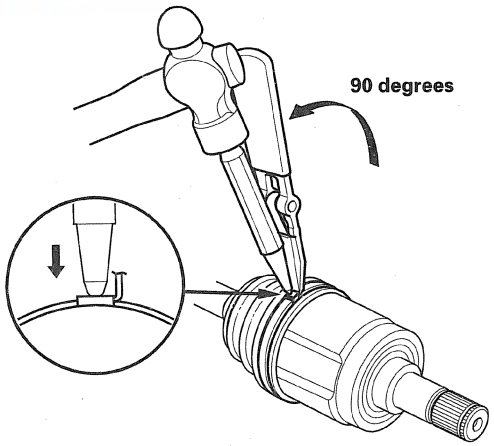

17. Unwind the boot band tool, and cut off the excess free end of the band to leave a 5—10 mm (0.2—0.4 in) tail protruding from the clip.

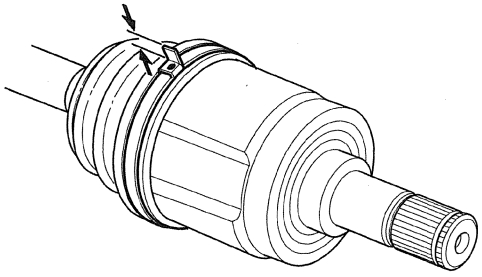

18. Bend the band end (A) by tapping it down using a hammer.

NOTE:
- Make sure the band and the clip do not interfere with anything on the vehicle, and the band does not move.
- Clean any grease remaining on the surrounding surfaces.

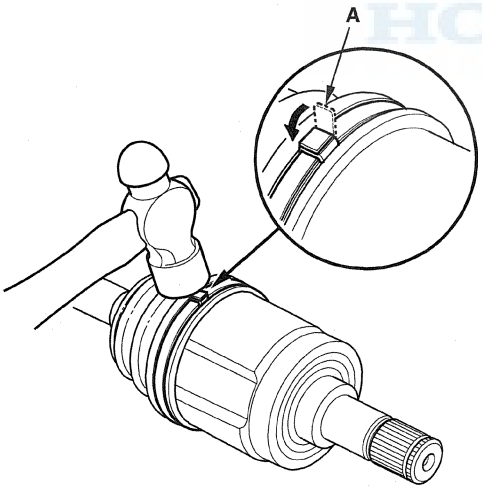

19. Repeat steps 11 through 18 for the band on the other end of the boot.

20. Install a new low profile band (A) onto the boot (B), then hook the tab (C) of the band.

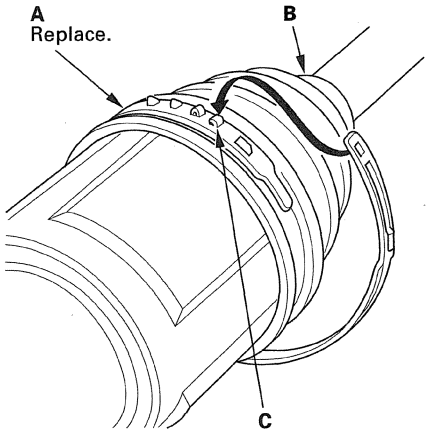

21. Close the hook portion of the band using commercially available boot band pliers (A), then hook the tabs (B) of the band.

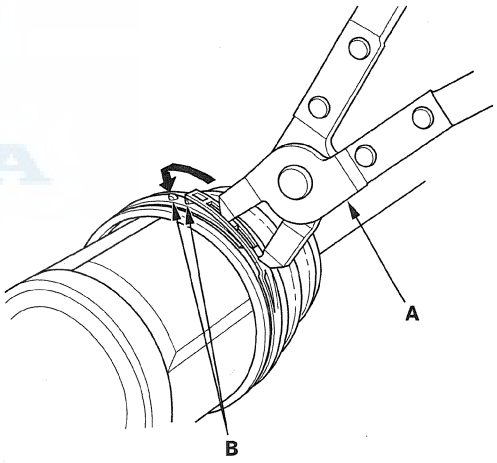

22. Install the boot band on the other end of the boot, and repeat steps 20 and 21.

(cont'd)

Front Driveshaft Reassembly (cont'd)

Outboard Joint Side

1. Wrap the splines with vinyl tape (A) to prevent damaging the outboard boot.

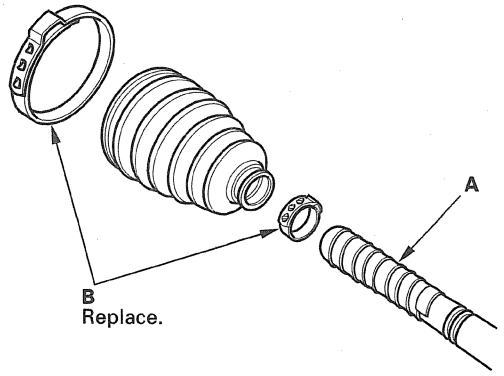

2. Install new ear clamp bands (B) and the outboard boot, then remove the vinyl tape. Be careful not to damage the outboard boot.

3. Make sure to check the size of a new stop ring.

NOTICE
To avoid driveshaft and vehicle damage, make sure you install a new stop ring.

Stop ring specifications

Overall diameter (A):	**29.2 mm (1.15 in)**
Wire diameter (B):	**2.0 mm (0.08 in)**

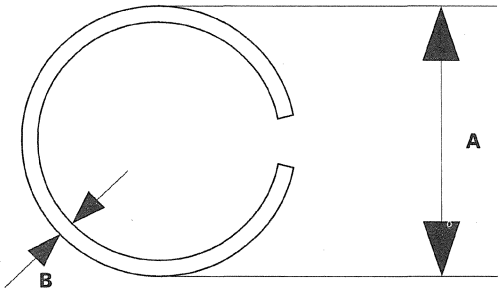

4. Install the stop ring (A) into the driveshaft groove (B).

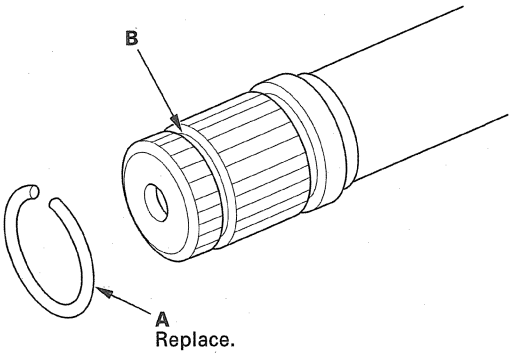

5. Pack about 35 g (1.2 oz) grease included in the new outboard boot set into the driveshaft hole in the outboard joint.

NOTE: If you are installing a new outboard joint, the grease is already installed.

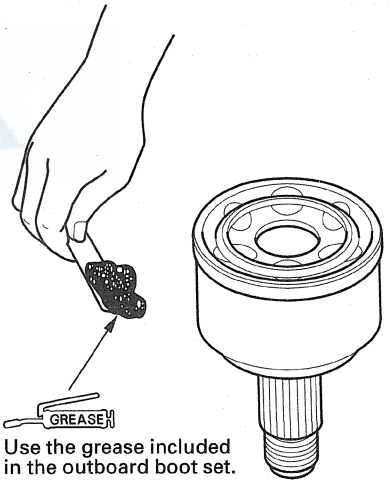

6. Insert the driveshaft (A) into the outboard joint (B) until the stop ring (C) is close to the joint.

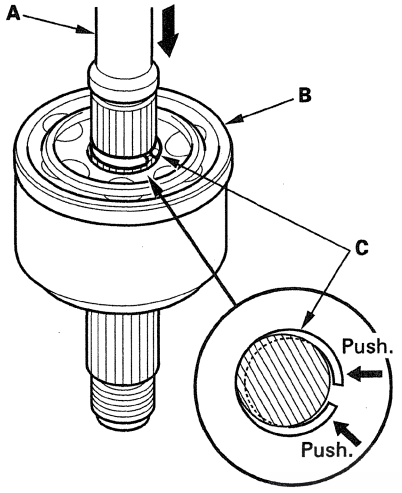

7. To completely seat the outboard joint, pick up the driveshaft and the joint, and tap or hit the assembly onto a hard surface from a height of about 10 cm (4 in).

   NOTE: Do not use a hammer, as excessive force may damage the driveshaft. Be careful not to damage the threaded section (A) of the outboard joint.

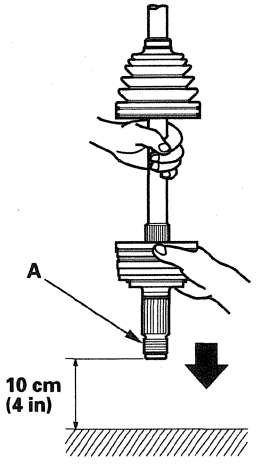

8. Check the alignment of the paint mark (A) you made with the outboard joint end (B).

NOTICE

To avoid driveshaft and vehicle damage, the shaft must be all the way into the outboard joint to ensure the stop ring is properly seated.

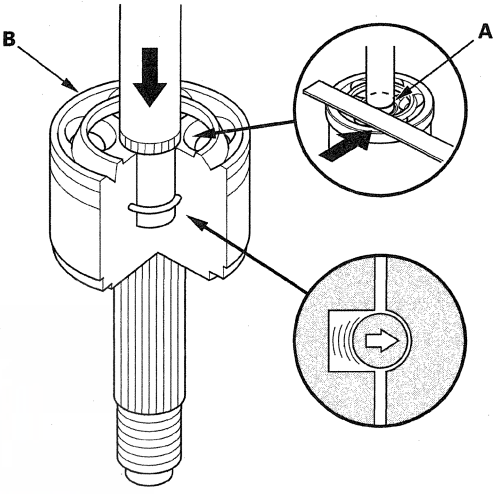

9. Pack the outboard joint (A) with the remaining joint grease included in the new outboard boot set.

Total grease quantity
Outboard joint: 140—150 g (4.9—5.3 oz)

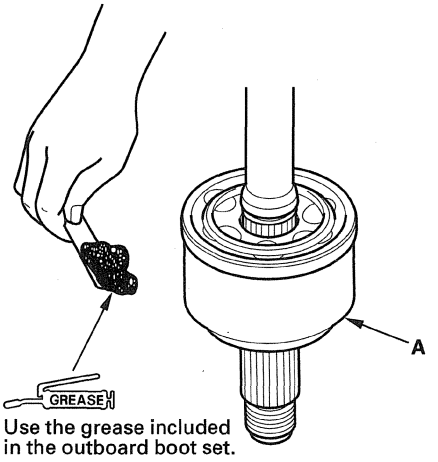

Use the grease included in the outboard boot set.

(cont'd)

Front Driveshaft Reassembly (cont'd)

10. Fit the boot ends (A) onto the driveshaft (B) and the outboard joint (C). Bleed any excess air from the boot by inserting a flat-tipped screwdriver between the boot and the joint.

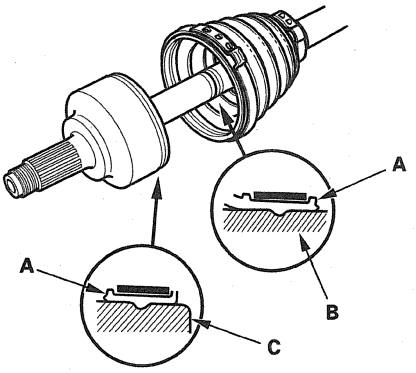

11. Inspect the length (A) of the driveshafts to the figure as shown, then adjust the boots to halfway between full compression and full extension.

Left driveshaft: 549—554 mm (21.61—21.81 in)

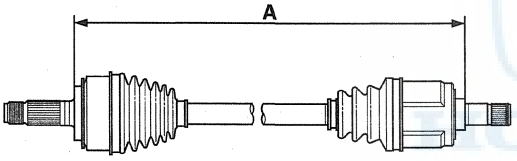

Right driveshaft: 529—534 mm (20.83—21.02 in)

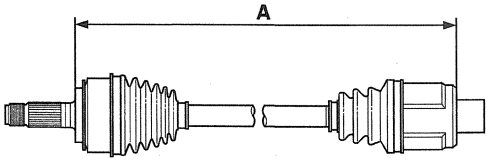

12. Close the ear portion (A) of the band using a commercially available seal clamp tool (Kent-Moore J-35910 or equivalent) (B).

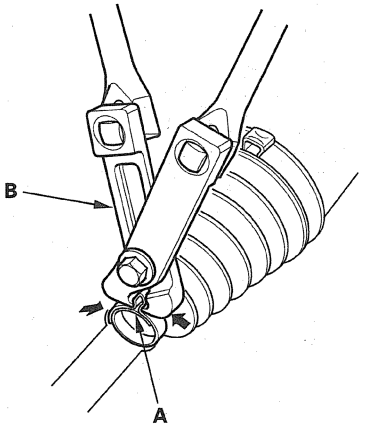

13. Check the clearance between the closed ear portion of the band. If the clearance is not within the standard, close the ear portion of the band tighter.

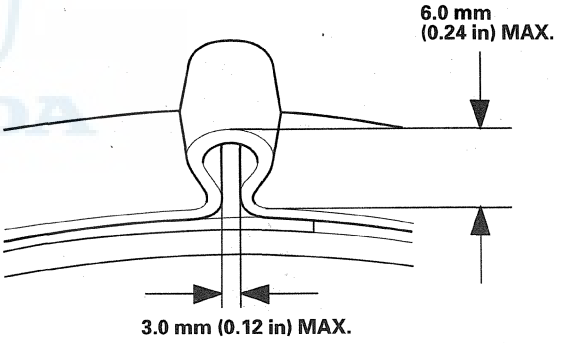

14. Repeat steps 12 and 13 for the band on the other end of the boot.

Front Driveshaft Installation

NOTE: Before starting installation, make sure the mating surfaces of the joint and the splined section are clean.

1. Apply about 5 g (0.18 oz) moly 60 paste (P/N 08734-0001) to the contact area (A) of the outboard joint and front wheel bearing.

   NOTE: The paste helps prevent noise and vibration.

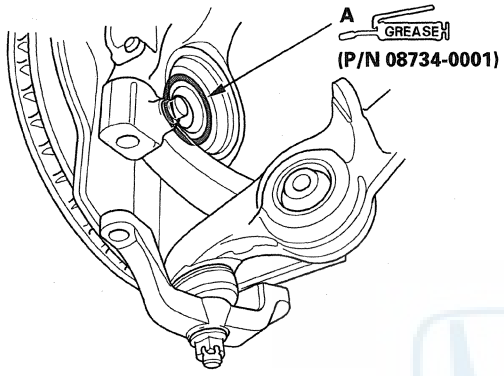

2. Install a new set ring (A) into the set ring groove (B) of the left driveshaft inboard joint.

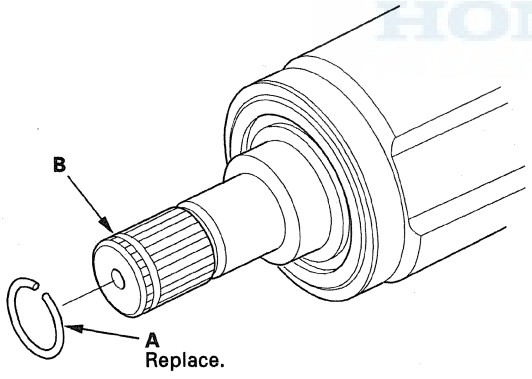

3. Install a new set ring (A) into the set ring groove (B) of the intermediate shaft.

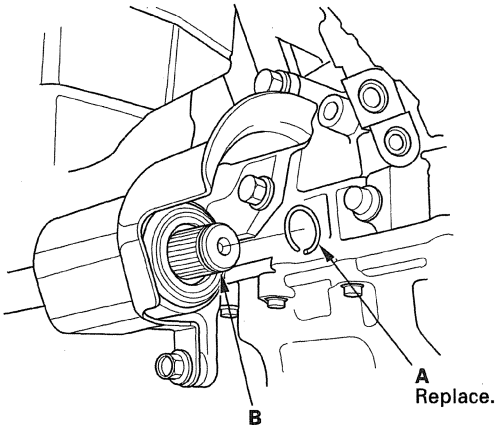

(cont'd)

Front Driveshaft Installation (cont'd)

4. Apply 0.5—1.0 g (0.02—0.04 oz) of super high temp urea grease (P/N 08798-9002) to the whole splined surface (A) of the right driveshaft. After applying grease, remove the grease from the splined grooves at intervals of 2—3 splines and from the set ring groove (B) so that air can bleed from the intermediate shaft.

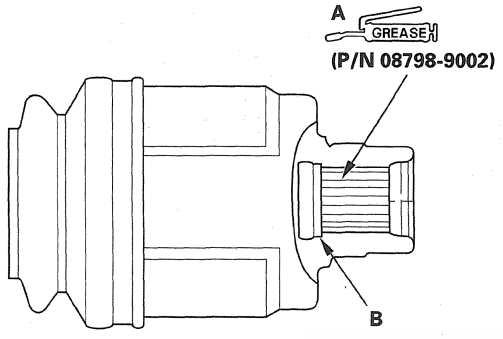

5. Clean the areas where the driveshaft contacts the differential thoroughly with solvent and dry them with compressed air.

   NOTE: Do not wash the rubber parts with solvent.

6. Insert the inboard end (A) of the driveshaft into the differential (B) or intermediate shaft (C) until the set ring (D) locks in the groove (E).

   NOTE: Insert the driveshaft horizontally to prevent damaging the oil seal.

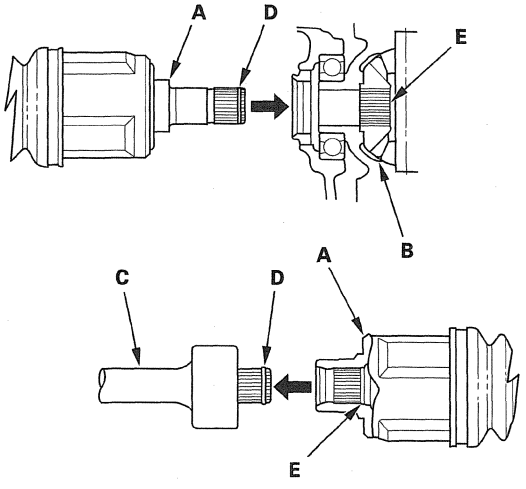

7. Install the outboard joint (A) into the front hub (B) on the knuckle.

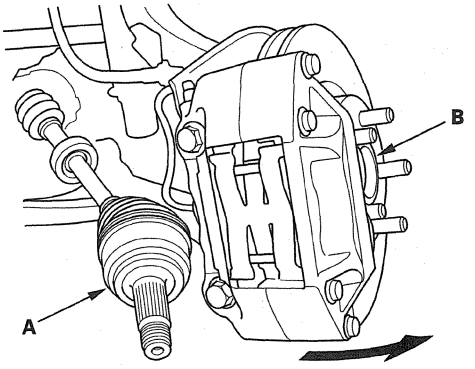

8. Install exhaust pipe A (see page 9-8).

9. Install the knuckle holder to the knuckle, and then tighten a new knuckle holder bolt (A) and a new nut (B).

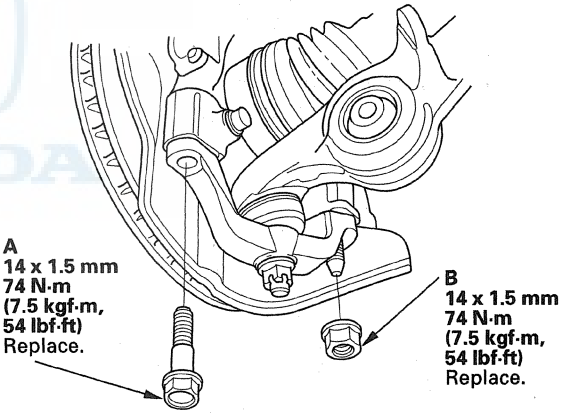

10. Install the damper fork (A) over the driveshaft and onto the lower arm. Install the damper in the damper fork so the aligning tab (B) is aligned with the slot in the damper fork. Loosely install the damper pinch bolt (C).

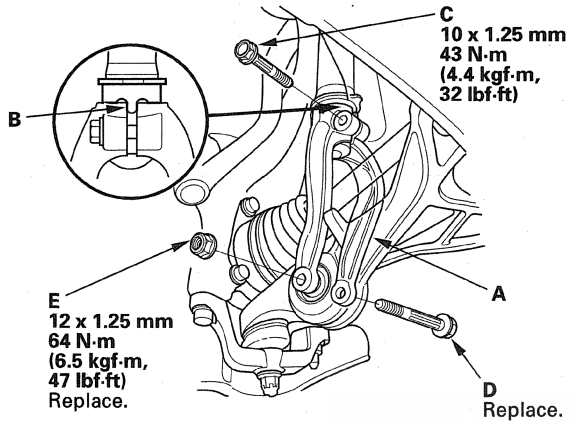

11. Loosely install a new flange bolt (D) and a new damper fork mounting nut (E).

12. Connect the front stabilizer link (A) to the lower arm and loosely install a new flange nut. Hold the stabilizer link ball joint pin (B) with a hex wrench (C), and tighten the new flange nut (D).

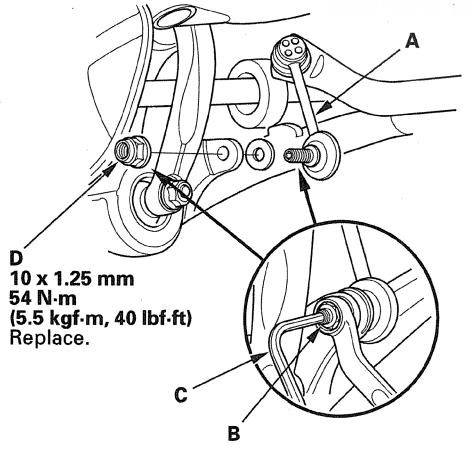

13. Place a floor jack under the lower arm, and raise the suspension to load it with the vehicle's weight.

    NOTE: Do not put the floor jack under the ball joint.

14. Tighten the damper pinch bolt and the damper fork mounting nut while holding the flange bolt to the specified torque values, then remove the floor jack.

15. Apply a small amount of engine oil to the seating surface of a new spindle nut (A).

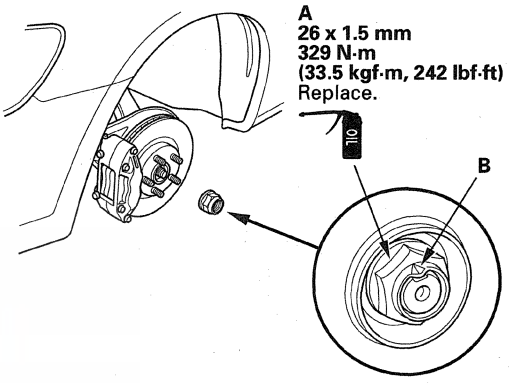

16. Install the spindle nut, then tighten it. After tightening, use a drift to stake the spindle nut shoulder (B) against the driveshaft.

17. Clean the mating surfaces of the brake discs and the wheels, then install the front wheels.

18. Turn the front wheel by hand, and make sure there is no interference between the driveshaft and the surrounding parts.

19. Lower the vehicle on the lift.

20. Refill the transmission with recommended transmission fluid (see page 14-196).

21. Check the wheel alignment, and adjust it if necessary (see page 18-5).

22. Test-drive the vehicle.

Intermediate Shaft Removal

1. Drain the transmission fluid, then reinstall the drain plug with a new sealing washer (see page 14-196).
2. Remove exhaust pipe A (see page 9-8).
3. Remove the right front driveshaft (see page 16-4).
4. Remove the rear warm up three way catalytic converter (WU-TWC) bracket (A).

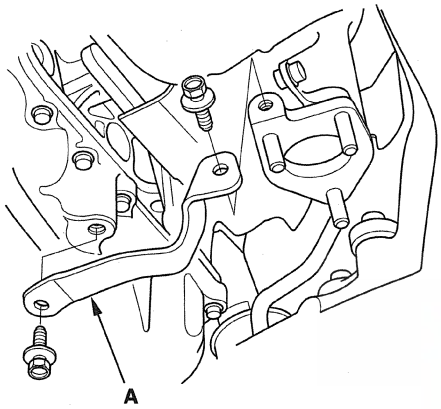

5. Remove the flange bolt (A) and the two dowel bolts (B).

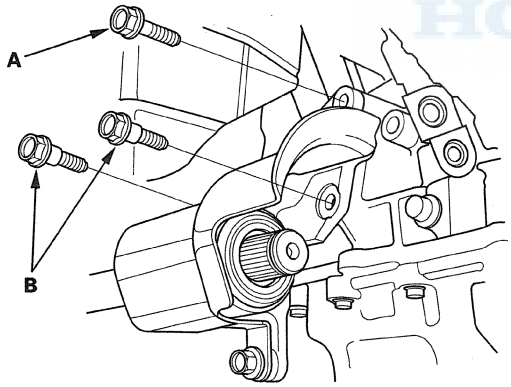

6. Remove the intermediate shaft (A) from the differential. Hold the intermediate shaft horizontal until it is clear of the differential to prevent damaging the oil seal (B).

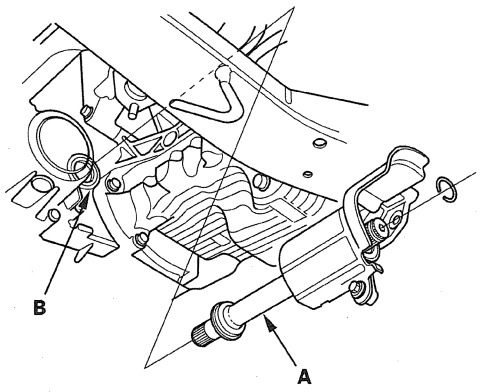

Intermediate Shaft Disassembly

Special Tools Required
- Driver handle, 15 x 135L 07749-0010000
- Base attachment, 70 mm 07LAF-SM40300
- Base, 73 x 78/82.6 mm 07965-SD90100
- Bearing driver attachment, 42 x 47 mm 07746-0010300

1. Remove the heat shield (A).

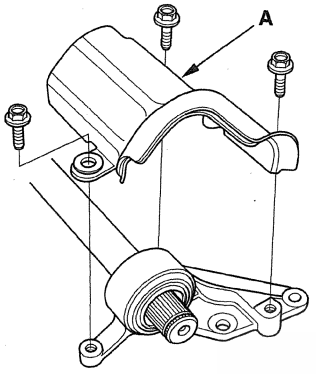

2. Remove the outer seal (A) and the external snap ring (B) from the intermediate shaft (C).

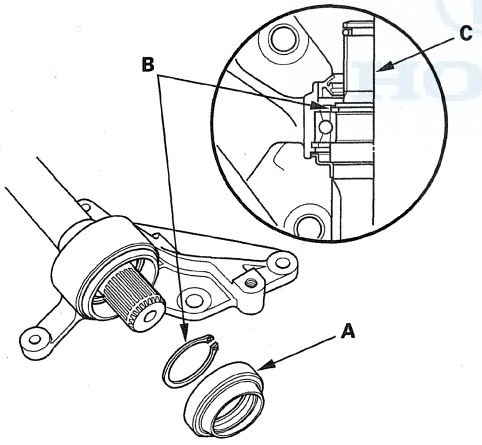

3. Press the intermediate shaft (A) out of the intermediate shaft bearing (B) using the 70 mm base attachment (C), the 73 x 78/82.6 mm base (D), and a press. Be careful not to damage the bearing support ring (E) on the intermediate shaft during disassembly.

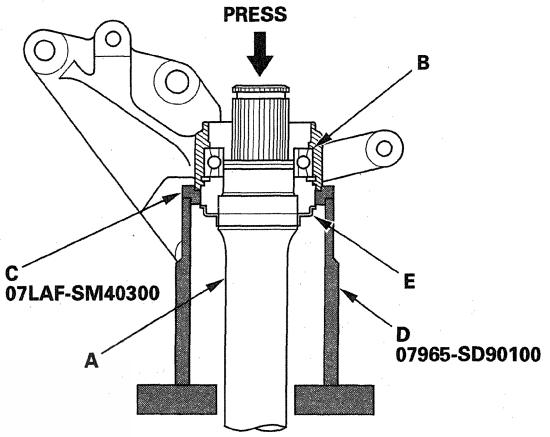

4. Remove the internal snap ring (A) from the bearing support (B).

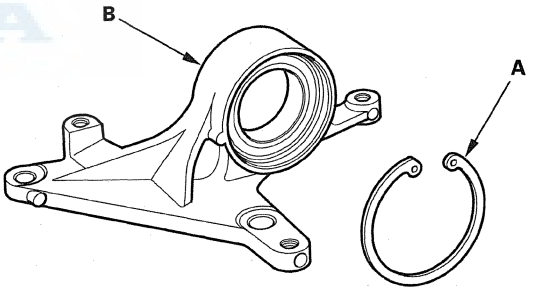

(cont'd)

Intermediate Shaft Disassembly (cont'd)

5. Press the intermediate shaft bearing (A) out of the bearing support (B) using the 15 x 135L driver handle (C), the 42 x 47 mm bearing driver attachment (D), the 70 mm base attachment (E), the 73 x 78/82.6 mm base (F), and a press.

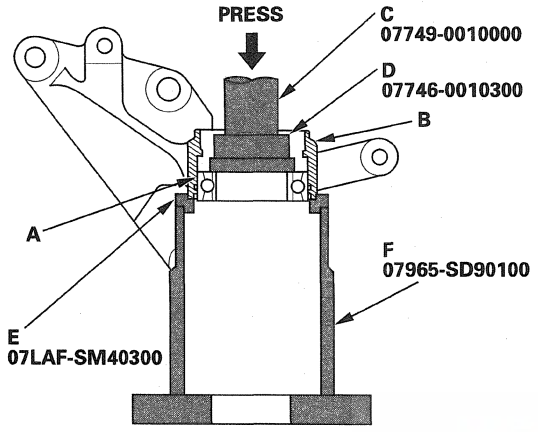

Intermediate Shaft Reassembly

Exploded View

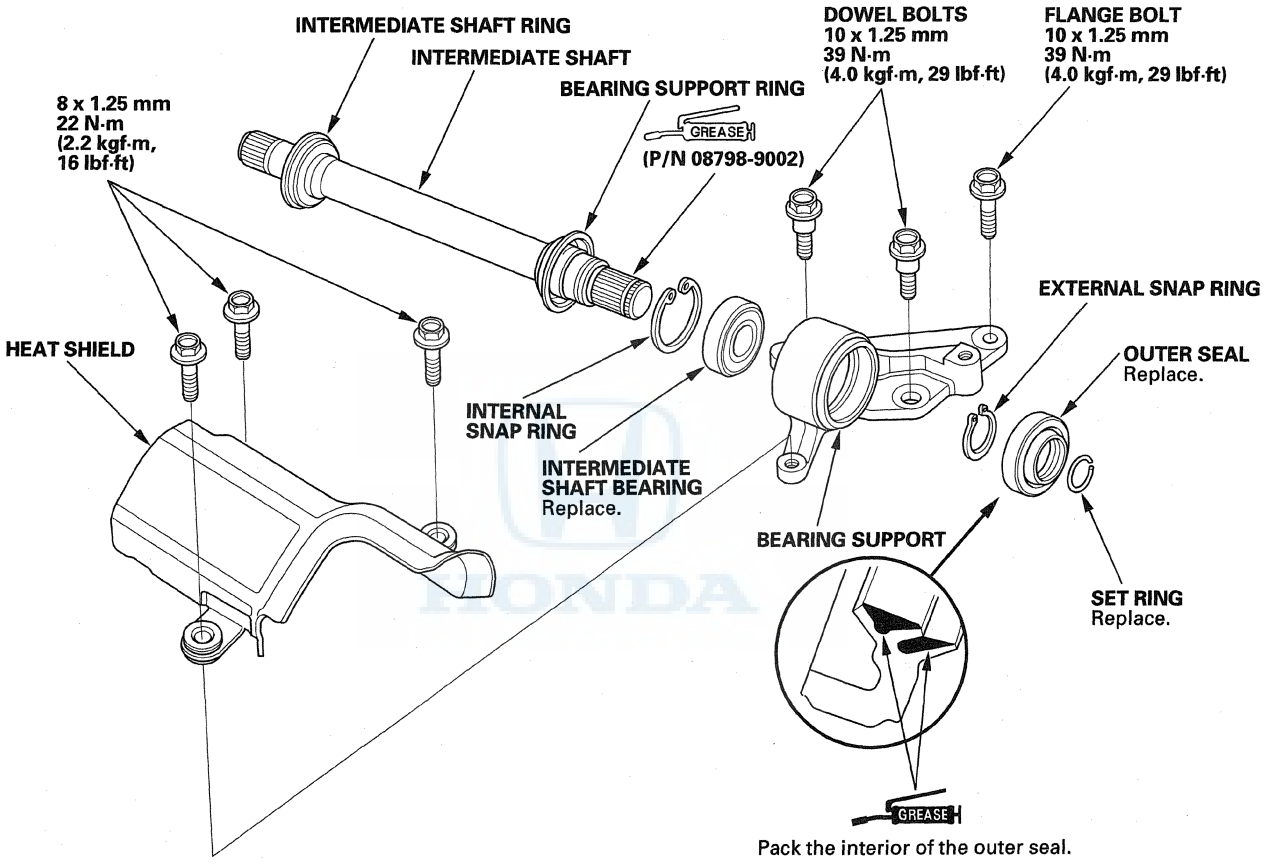

Pack the interior of the outer seal.

(cont'd)

Intermediate Shaft Reassembly (cont'd)

Special Tools Required
- Driver handle, 15 x 135L 07749-0010000
- Base attachment, 70 mm 07LAF-SM40300
- Base, 73 x 78/82.6 mm 07965-SD90100
- Oil seal driver attachment, 58 mm 07JAD-PH80101
- Fork seal driver, 39.2 mm 07947-4630100
- Installer attachment, 40 mm 07LAD-PW50601

NOTE: Refer to the Exploded View, as needed, during this procedure.

1. Clean the disassembled parts with solvent, and dry them with compressed air.

   NOTE: Do not wash the rubber parts with solvent.

2. Press a new intermediate shaft bearing (A) into the bearing support (B) using the 15 x 135L driver handle (C), the 58 mm oil seal driver attachment (D), and a press.

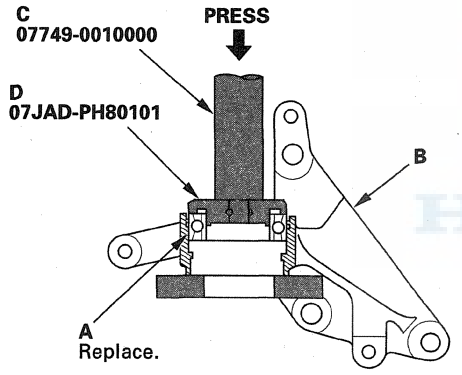

3. Install the internal snap ring (A) into the groove (B) of the bearing support.

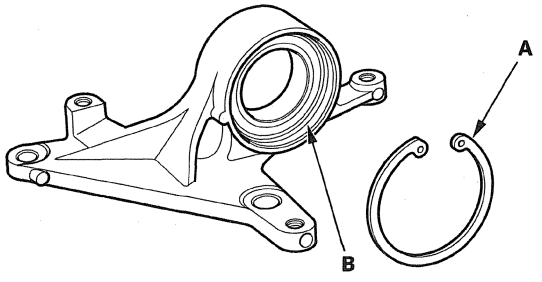

4. Press the intermediate shaft (A) into the new shaft bearing (B) using the 39.2 mm fork seal driver (C) and a press.

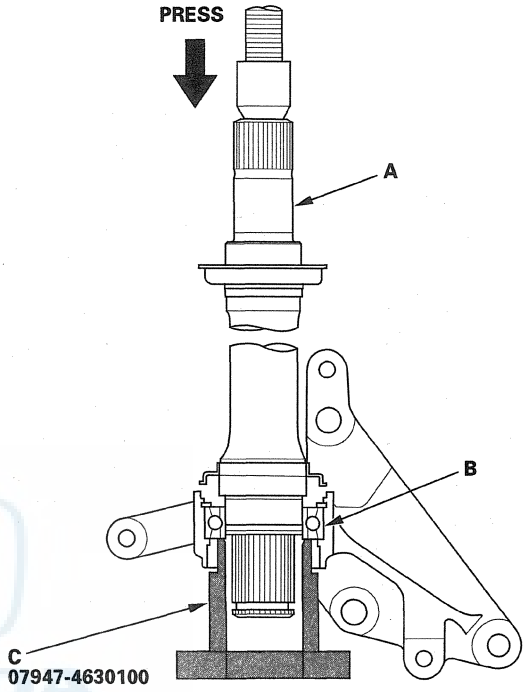

5. Install the external snap ring (A) into the groove of the intermediate shaft (B).

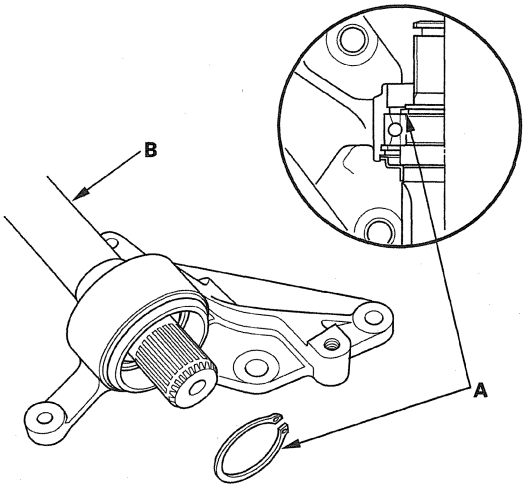

6. Install a new outer seal (A) into the bearing support (B) using the 40 mm installer attachment (C), the 70 mm base attachment (D), the 73 x 78/82.6 mm base (E), and a press.

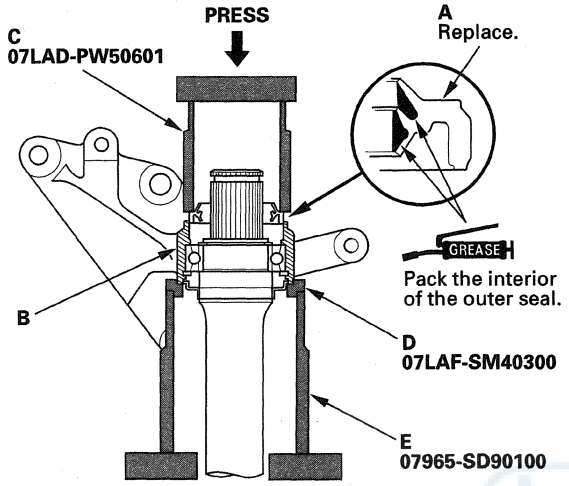

7. Install the heat shield.

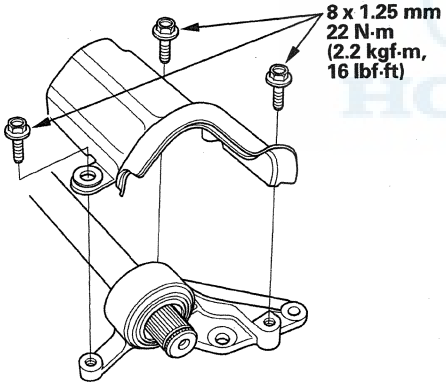

Intermediate Shaft Installation

1. Clean the areas where the driveshaft contacts the differential thoroughly with solvent, and dry them with compressed air.

   NOTE: Do not wash the rubber parts with solvent.

2. Install a new set ring (A) into the set ring groove (B) of the intermediate shaft (C).

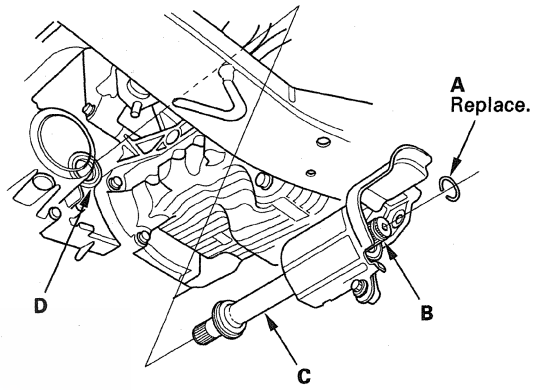

3. Insert the intermediate shaft into the differential correctly.

   NOTE: Insert the intermediate shaft carefully to prevent damaging the oil seal (D).

4. Install the flange bolt (A) and the two dowel bolts (B).

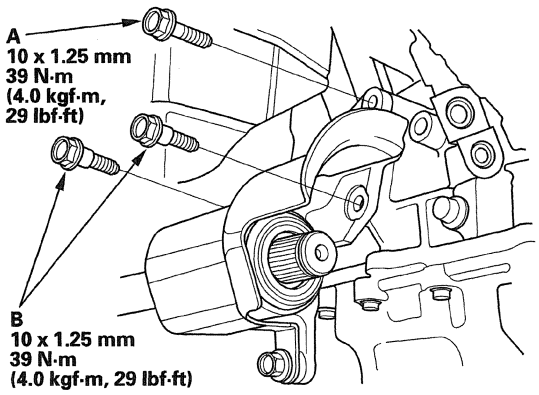

(cont'd)

Intermediate Shaft Installation (cont'd)

5. Install the rear warm up three way catalytic converter (WU-TWC) bracket (A).

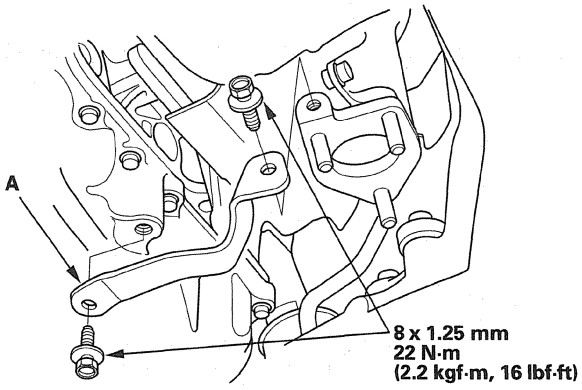

6. Install the right front driveshaft (see page 16-19).
7. Install exhaust pipe A (see page 9-8).
8. Refill the transmission with the recommended transmission fluid (see page 14-196).
9. Check the wheel alignment, and adjust it if necessary (see page 18-5).
10. Test-drive the vehicle.

Rear Driveshaft Removal

1. Raise the vehicle on a lift.
2. Remove the rear wheels.
3. Pry up the stake (A) on the spindle nut (B), then remove the nut.

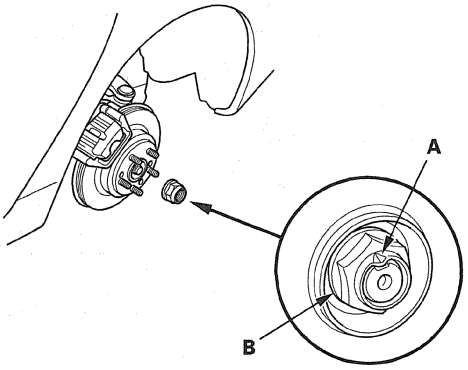

4. Remove the rear differential, and disconnect the inboard joint from the rear differential (see page 15-101).
5. Separate the rear driveshaft outboard joint from the rear hub using a plastic hammer.

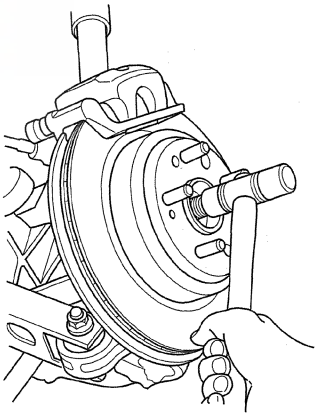

6. Remove the rear driveshaft (A).

NOTE:
- Be careful not to damage the wheel speed sensor (B).
- Pull on the outer joint. Do not pull on the driveshaft (C) because the joint may come apart.

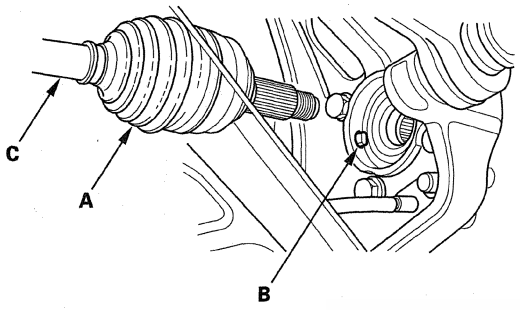

7. Remove the set ring from the rear differential.

Rear Driveshaft Disassembly

Special Tools Required
- Threaded adapter, 24 x 1.5 mm 07XAC-001020A
- Slide hammer, 5/8" x 18 UNF, commercially available
- Boot band pliers, commercially available
- Puller, commercially available

Inboard Joint Side

1. Remove the boot bands. Be careful not to damage the boot.

   - If the boot band is a locking tab type (A), pry up the locking tab (B) with a screwdriver, and lift up the end of the band.
   - If the boot band is a double loop type (C), lift up the band end (D), and push it into the clip (E).

Locking tab type

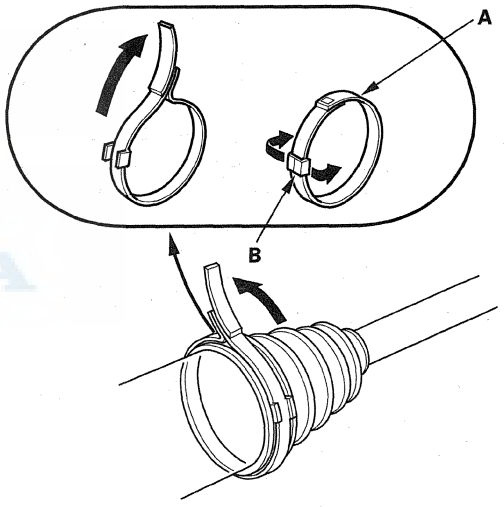

Double loop type

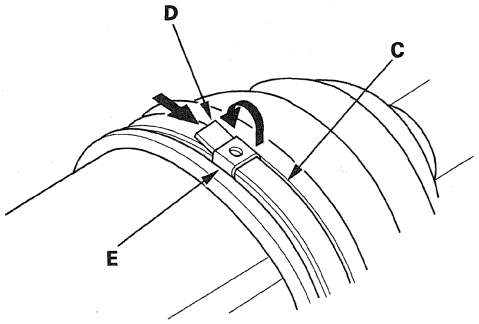

(cont'd)

Rear Driveshaft Disassembly (cont'd)

2. Remove the circlip (A).

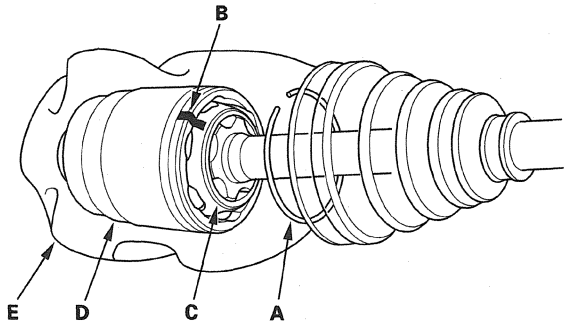

3. Make marks (B) on the bearing retainer (C) and the inboard joint (D) to identify the locations of the bearing retainer to the grooves in the inboard joint. Then remove the inboard joint on a clean shop towel (E). Be careful not to drop the steel balls when separating them from the inboard joint.

4. Make marks (A) on the bearing retainer (B), the bearing race (C), and the driveshaft (D) to identify the position of the bearing retainer and the bearing race on the shaft.

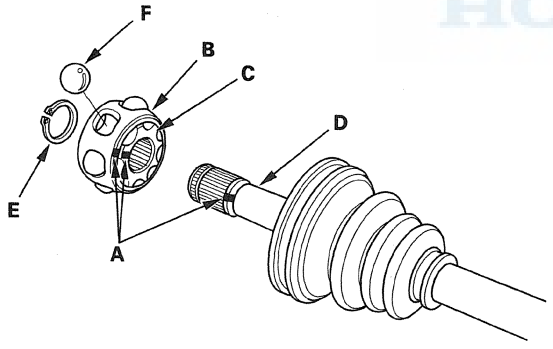

5. Remove the snap ring (E).

6. Remove the bearing race and the steel balls (F).

   NOTE: If necessary, use a commercially available puller.

7. Wrap the splines on the driveshaft with vinyl tape (A) to prevent damaging the boot.

Double loop type

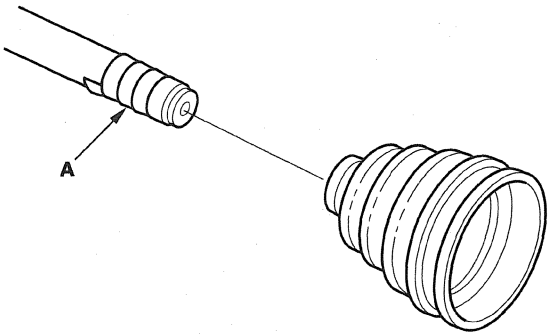

Locking tab type

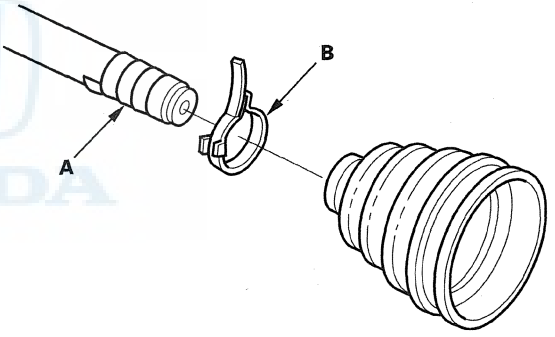

8. Remove the inboard boot and locking tab type boot band (B). Be careful not to damage the boot.

9. Remove the vinyl tape.

Outboard Joint Side

1. Remove the boot bands. Be careful not to damage the boot.

   - If the boot band is a low profile type (A), pinch the boot band using a commercially available boot band pliers (B).
   - If the boot band is an ear clamp type (C), lift up the three tabs (D) with a screwdriver.

Low profile type

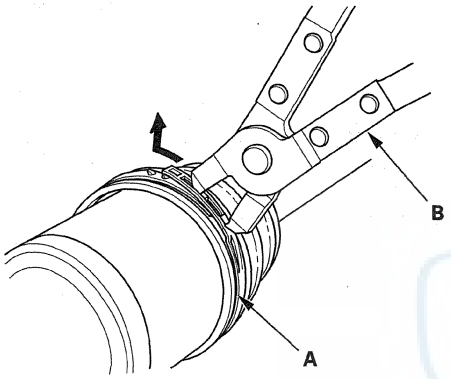

Ear clamp type

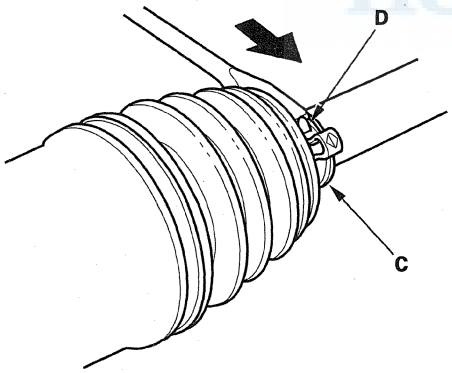

2. Slide the outboard boot (A) partially toward the inboard joint side. Be careful not to damage the boot.

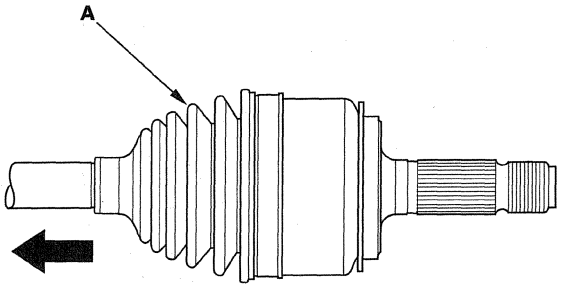

3. Wipe off the grease to expose the driveshaft and the outboard joint inner race.

4. Make a mark (A) on the driveshaft (B) at the same level as the outboard joint end (C).

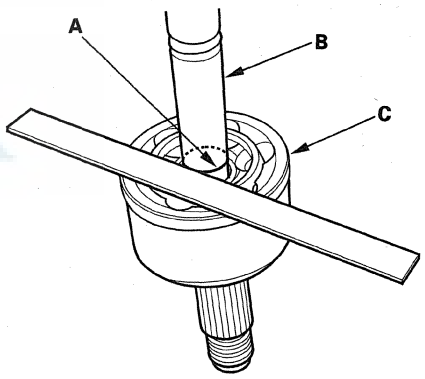

(cont'd)

Rear Driveshaft Disassembly (cont'd)

5. Securely clamp the driveshaft in a bench vise with a shop towel.
6. Remove the outboard joint (A) using the 24 x 1.5 mm, threaded adapter (B), and a commercially available 5/8" x 18 UNF slide hammer (C).

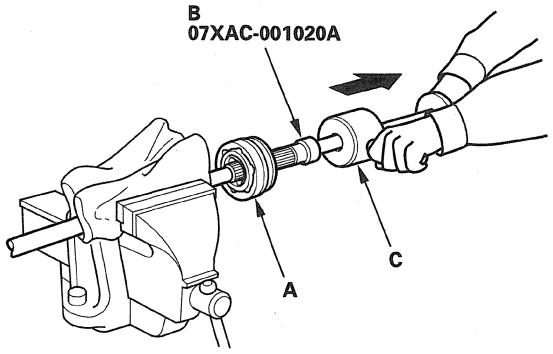

7. Remove the driveshaft from the bench vise.
8. Remove the stop ring (A) from the driveshaft.

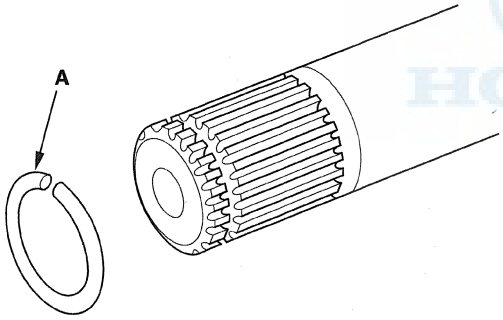

9. Wrap the splines on the driveshaft with vinyl tape (A) to prevent damaging the boot.

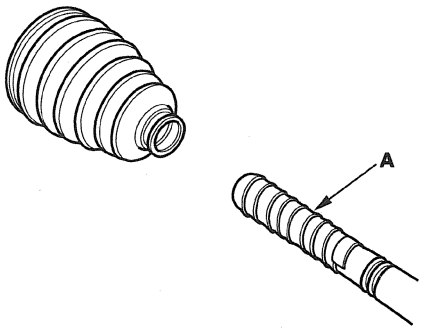

10. Remove the outboard boot. Be careful not to damage the boot.
11. Remove the vinyl tape.

Rear Driveshaft Reassembly

Exploded View

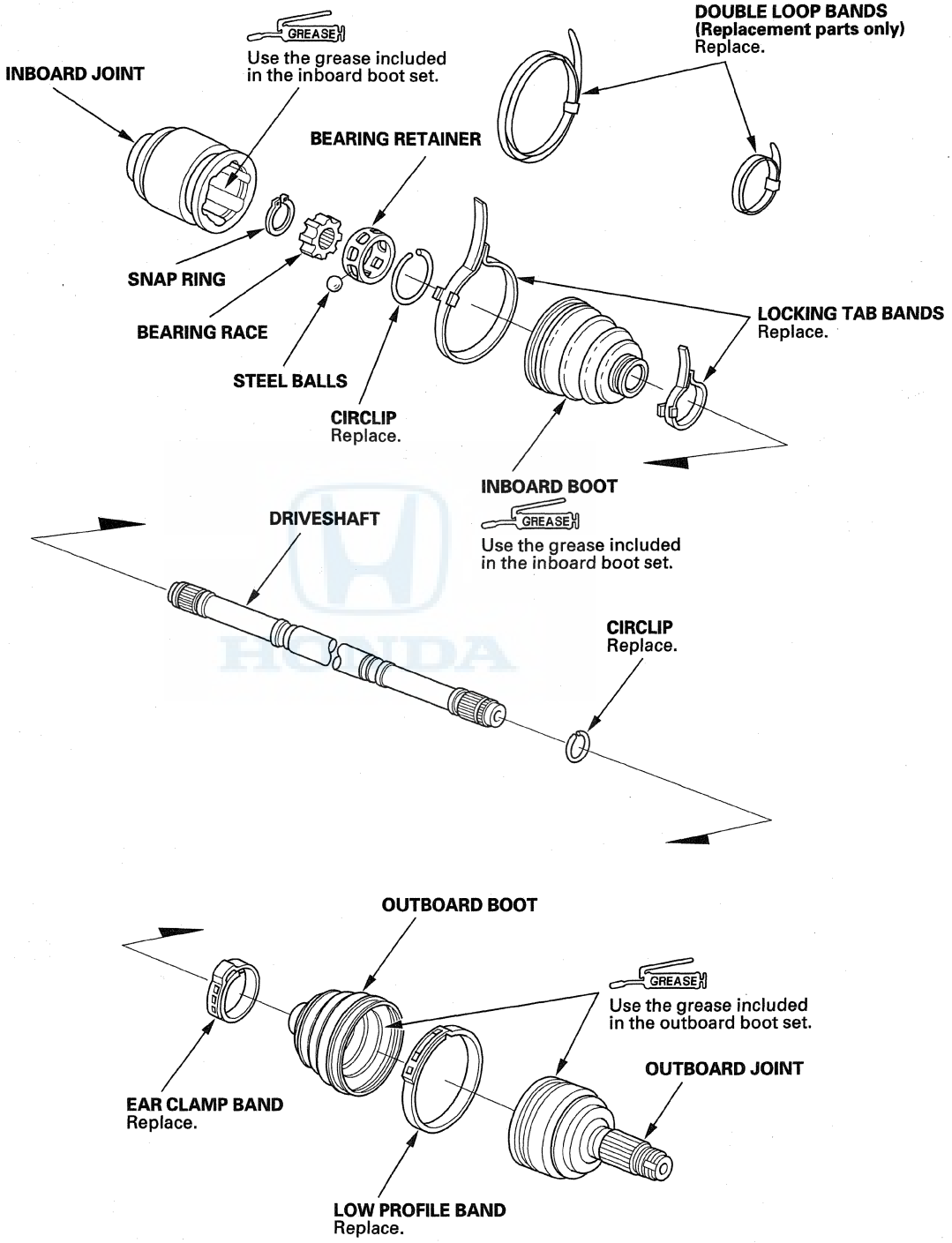

(cont'd)

Rear Driveshaft Reassembly (cont'd)

Special Tools Required
- Boot band tool, KD-3191 or equivalent, commercially available
- Seal clamp tool, Kent-Moore J-35910 or equivalent, commercially available
- Boot band pliers, commercially available

NOTE: Refer to the Exploded View, as needed, during this procedure.

Inboard Joint Side

1. Wrap the splines with vinyl tape (A) to prevent damaging the inboard boot.

Double loop type

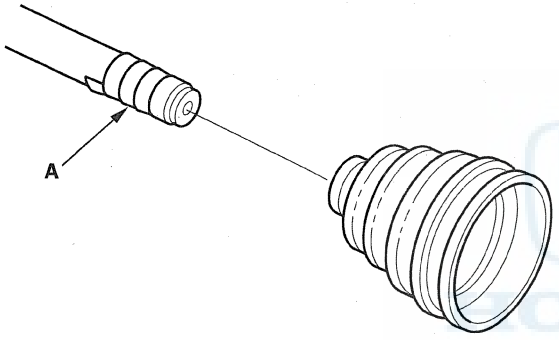

Locking tab type

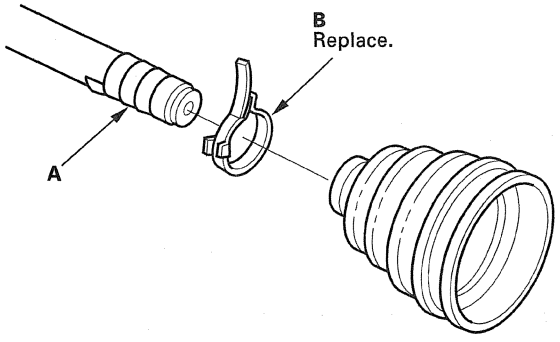

2. Install the inboard boot and boot band (B) onto the driveshaft, then remove the vinyl tape. Be careful not to damage the inboard boot.

3. Assemble the steel balls (A), the bearing retainer (B), and the bearing race (C) by aligning the marks (D) you made on the bearing retainer and the bearing race.

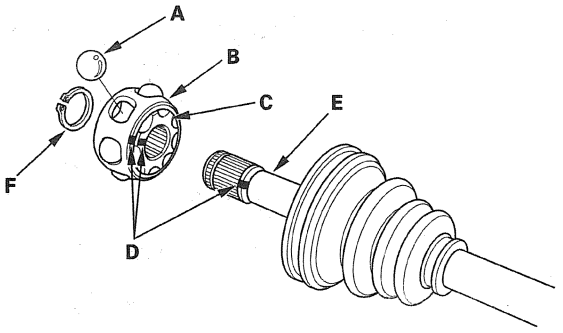

4. Install the bearing onto the driveshaft (E) by aligning the marks you made on the bearing and the driveshaft. Be careful not to drop the steel balls when installing the bearing onto the driveshaft.

5. Install the snap ring (F).

6. Pack the inboard joint with the joint grease included in the new inboard boot set.

Grease quantity
Inboard joint: 100—120 g (3.5—4.2 oz)

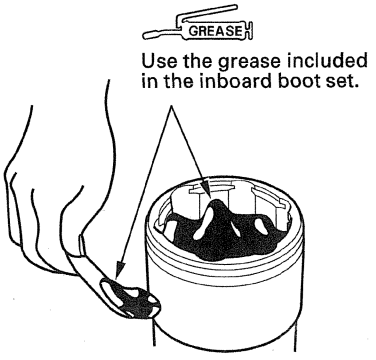

7. Install the inboard joint onto the driveshaft by aligning the marks (A) you made on the inboard joint and the bearing retainer.

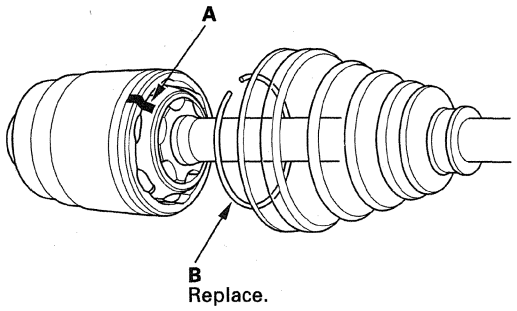

8. Install a new circlip (B) into the inboard joint groove.

9. Fit the boot ends (A) onto the driveshaft (B) and the inboard joint (C).

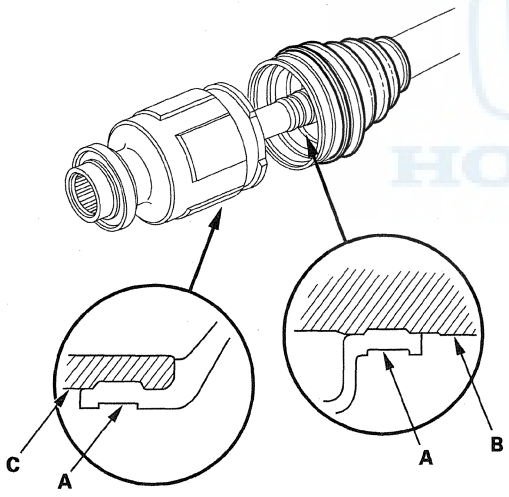

10. Adjust the length (A) of the driveshafts to the figure as shown, then adjust the boots to halfway between full compression and full extension. Bleed excess air from the boots by inserting a flat-tipped screwdriver between the boot and the joint.

Left driveshaft: 480—485 mm (18.90—19.09 in)
Right driveshaft: 515—520 mm (20.28—20.47 in)

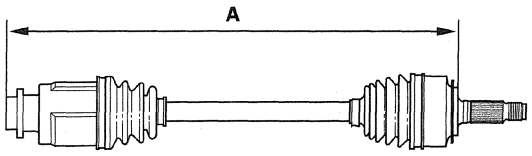

11. Install new boot bands.

- For the double loop type, go to step 12.
- For the locking tab type, go to step 21.

12. Fit the boot ends onto the driveshaft and the inboard joint, then install a new double loop band (A) onto the boot (B).

NOTE: Pass the end of the double loop band through the clip (C) twice in the direction of the forward rotation of the driveshaft.

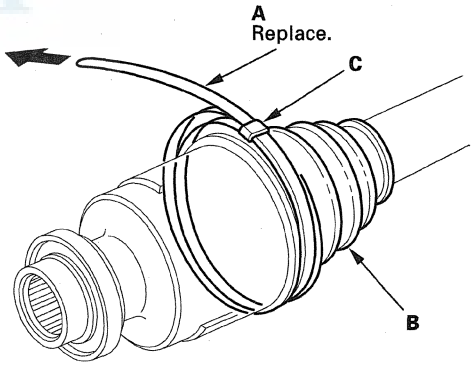

13. Pull up the slack in the band by hand.

(cont'd)

Rear Driveshaft Reassembly (cont'd)

14. Mark position (A) on the band 10—14 mm (0.4—0.6 in) from the clip (B).

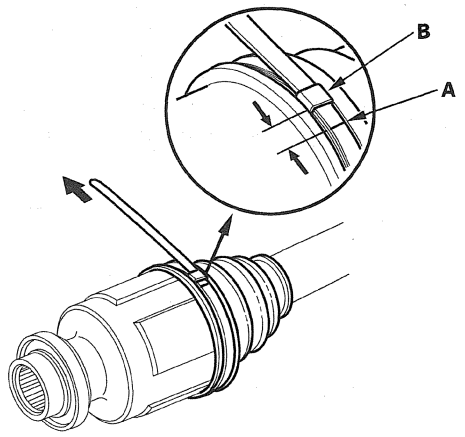

15. Thread the free end of the band through the nose section of the commercially available boot band tool, KD-3191 or equivalent (A), and into the slot on the winding mandrel (B).

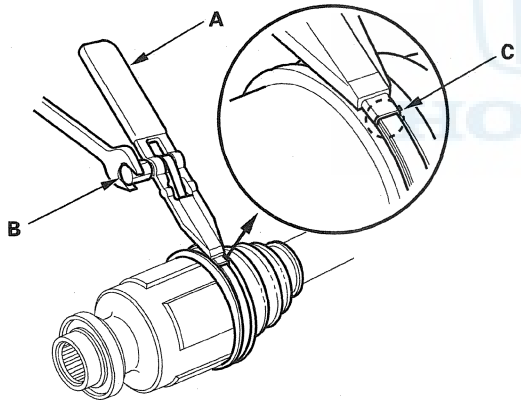

16. Using a wrench on the winding mandrel of the boot band tool, tighten the band until the marked spot (C) on the band meets the edge of the clip.

17. Lift up the boot band tool to bend the free end of the band 90 degrees to the clip. Center-punch the clip, then fold over the remaining tail onto the clip.

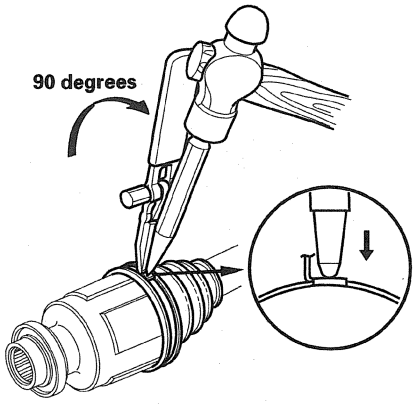

18. Unwind the boot band tool, and cut off the excess free end of the band to leave 5—10 mm (0.2—0.4 in) from the clip.

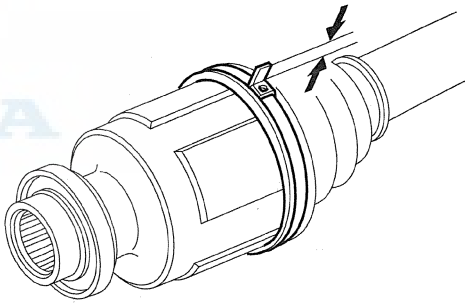

19. Bend the band end (A) by tapping it down using a hammer.

    NOTE:
    - Make sure the band and the clip do not interfere with anything, and the band does not move.
    - Clean any grease remaining on the surrounding surfaces.

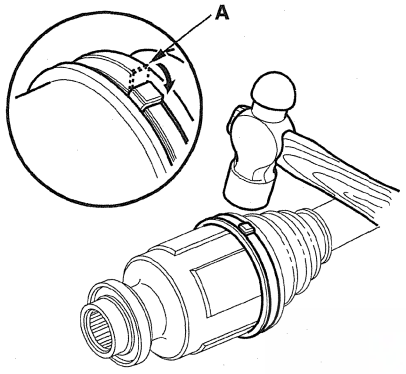

20. Repeat steps 12 through 19 for the band on the other end of the boot.

21. Install a new locking tab type boot band on the inboard joint side of the inboard boot. Fold down the locking tabs.

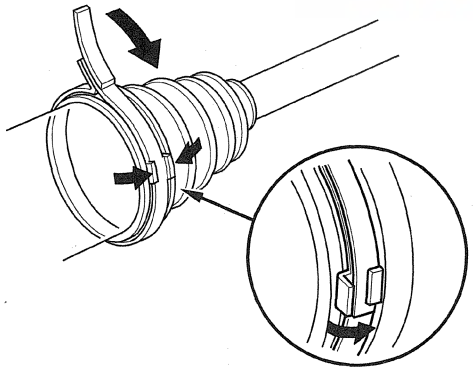

22. Lightly tap on the doubled-over portions to flatten them.

23. Install the boot band on the other end of the boot, and repeat steps 21 and 22.

Outboard Joint Side

1. Wrap the splines with vinyl tape (A) to prevent damaging the outboard boot.

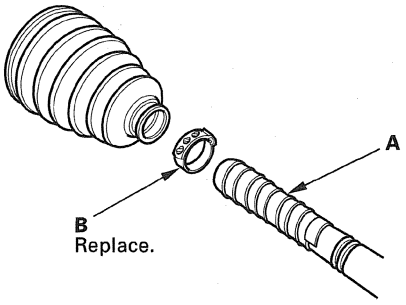

2. Install a new ear clamp band (B) and the outboard boot, then remove the vinyl tape. Be careful not to damage the outboard boot.

3. Make sure to check the size of a new stop ring.

NOTICE

To avoid driveshaft and vehicle damage, make sure you install a new stop ring.

Stop ring specifications

Overall diameter (A):	**28.5 mm (1.12 in)**
Wire diameter (B):	**1.8 mm (0.07 in)**

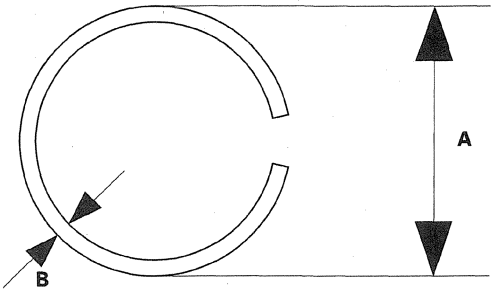

(cont'd)

Rear Driveshaft Reassembly (cont'd)

4. Install the stop ring (A) into the driveshaft groove (B).

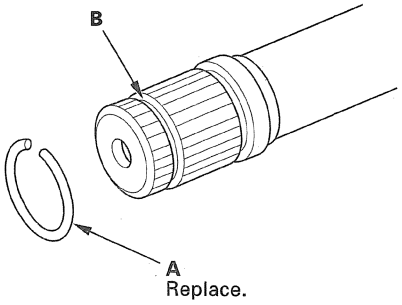

5. Pack about 35 g (1.2 oz) grease included in the new outboard boot set into the driveshaft hole in the outboard joint.

NOTE: If you are installing a new outboard joint, the grease is already installed.

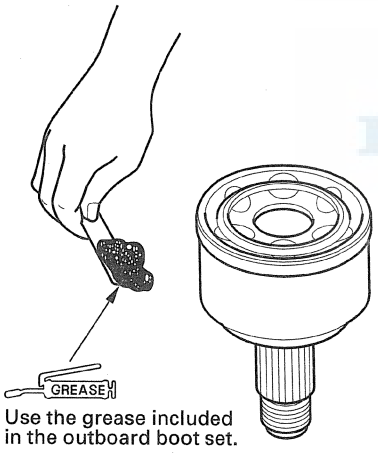

6. Insert the driveshaft (A) into the outboard joint (B) until the stop ring (C) is closed to the joint.

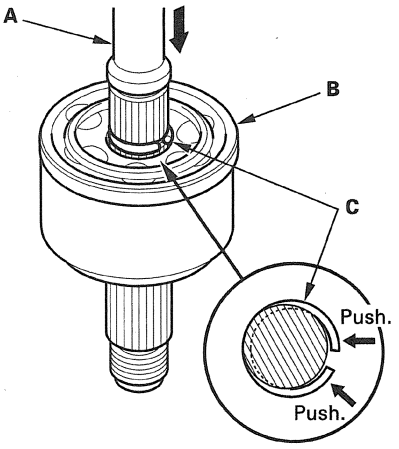

7. To completely seat the outboard joint, pick up the driveshaft and joint, and tap or hit the assembly onto a hard surface from a height of about 10 cm (4 in).

NOTE: Do not use a hammer as excessive force may damage the driveshaft. Be careful not to damage the threaded section (A) of the outboard joint.

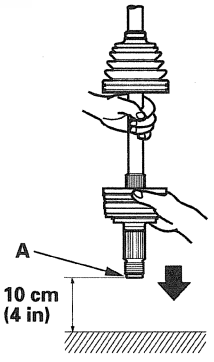

8. Check the alignment of the paint mark (A) you made with the outboard joint end (B).

NOTICE

To avoid driveshaft and vehicle damage, the shaft must be all the way into the outboard joint to ensure the stop ring is properly seated.

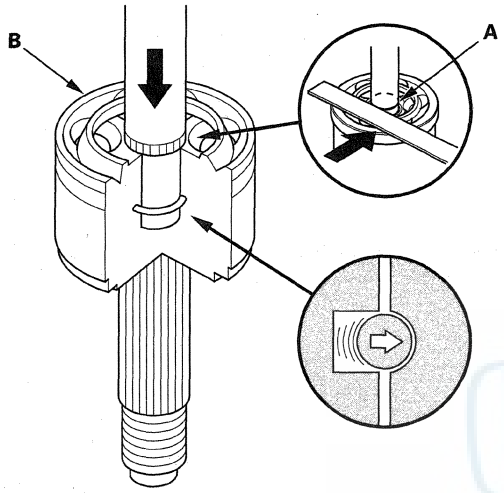

9. Pack the outboard joint (A) with the remaining joint grease included in the new outboard boot set.

Total grease quantity
Outboard joint: 105—125 g (3.7—4.4 oz)

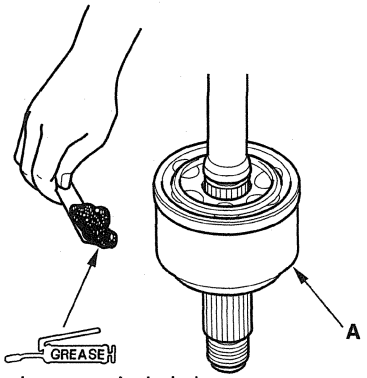

Use the grease included in the outboard boot set.

10. Fit the boot ends (A) onto the driveshaft (B) and the outboard joint (C) grooves. Bleed any excess air from the boots by inserting a flat-tipped screwdriver between the boot and the joint.

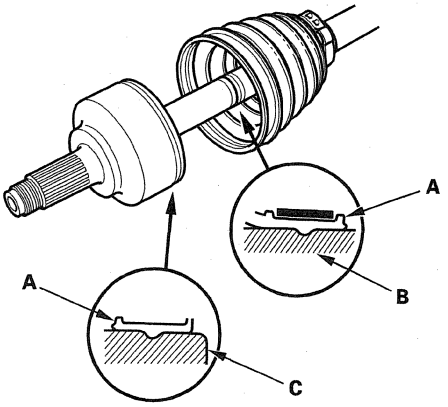

11. Inspect the length (A) of the driveshafts to the figure as shown, then adjust the boots to halfway between full compression and full extension.

Left driveshaft: 480—485 mm (18.90—19.09 in)
Right driveshaft: 515—520 mm (20.28—20.47 in)

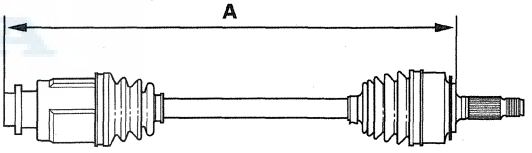

(cont'd)

Rear Driveshaft Reassembly (cont'd)

12. Close the ear portion (A) of the band using a commercially available seal clamp tool (Kent-Moore J-35910 or equivalent) (B).

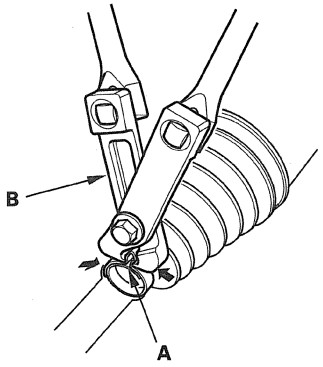

13. Check the clearance between the closed ear portion of the band. If the clearance is not within the standard, close the ear portion of the band tighter.

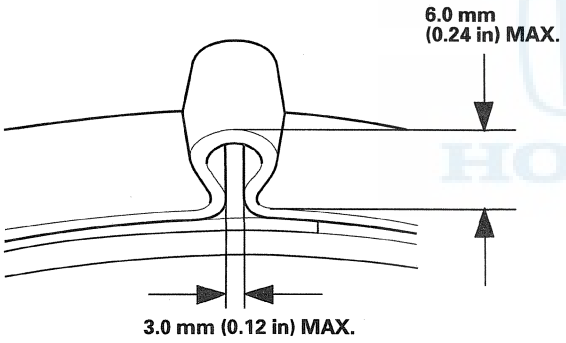

14. Install a new low profile band (A) onto the boot (B), then hook the tab (C) of the band.

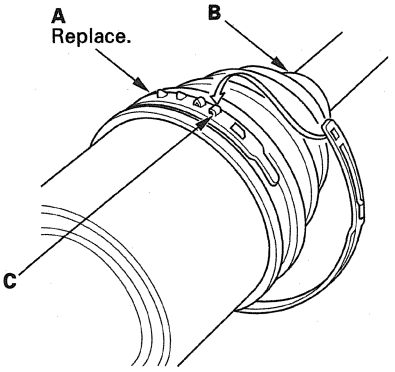

15. Close the hook portion of the band using commercially available boot band pliers (A), then hook the tabs (B) of the band.

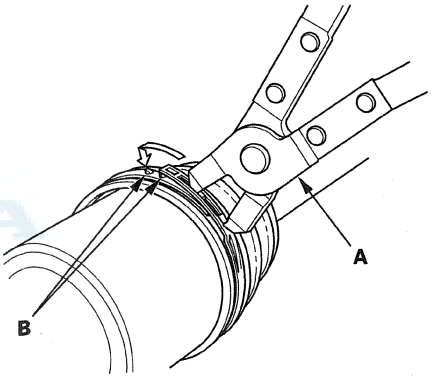

Rear Driveshaft Installation

NOTE: Before starting installation, make sure the mating surfaces of the joint and the splined section are clean.

1. Apply 1.5—2.0 g (0.05—0.07 oz) of super high temp urea grease (P/N 08798-9002) to the whole splined surface (A). After applying grease, remove the grease from the splined grooves at intervals of 2—3 splines and from the set ring groove (B) so that air can bleed from the differential.

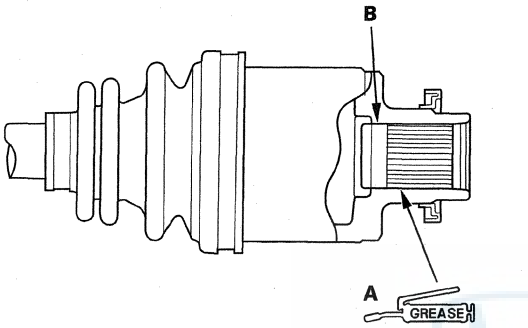

2. Install the outboard joint (A) into the rear hub (B).

   NOTE: Be careful not to damage the wheel speed sensor (C).

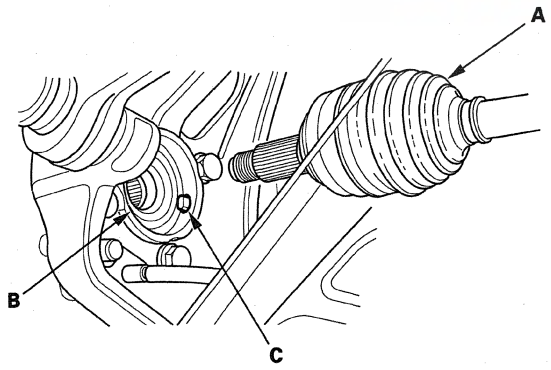

3. Install new set rings in the set ring groove of the rear differential.

4. Clean the areas where the driveshaft contacts the rear differential thoroughly with solvent, and dry with compressed air.

   NOTE: Do not wash the rubber parts with solvent.

5. Make sure the inboard joint (A) is installed all the way into the rear differential (B) and to ensure the set ring (C) is properly seated.

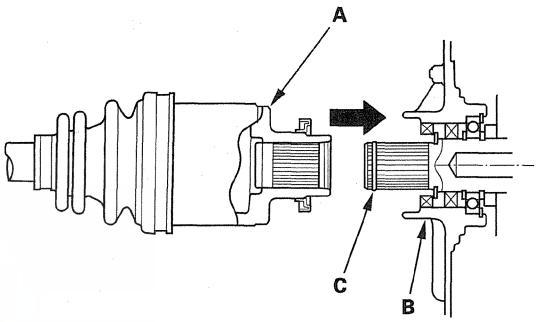

6. Install the rear differential (see page 15-102).

(cont'd)

Rear Driveshaft Installation (cont'd)

7. Apply a small amount of engine oil to the seating surface of a new spindle nut (A).

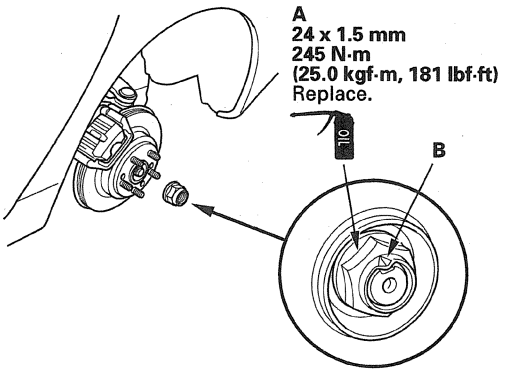

8. Install the spindle nut, then tighten it. After tightening, use a drift to stake the spindle nut shoulder (B) against the driveshaft.
9. Clean the mating surfaces of the brake discs and the wheels, then install the rear wheels.
10. Turn the rear wheel by hand, and make sure there is no interference between the driveshaft and the surrounding parts.
11. Lower the vehicle on the lift.
12. Check the wheel alignment, and adjust it if necessary (see page 18-5).
13. Test-drive the vehicle.

Propeller Shaft Inspection

Universal Joint and Boots

1. Shift the transmission to N.
2. Raise the vehicle on a lift.
3. Check the center support bearing (A) for excessive play or noise. If the center support has excessive play or noise, replace the propeller shaft assembly.

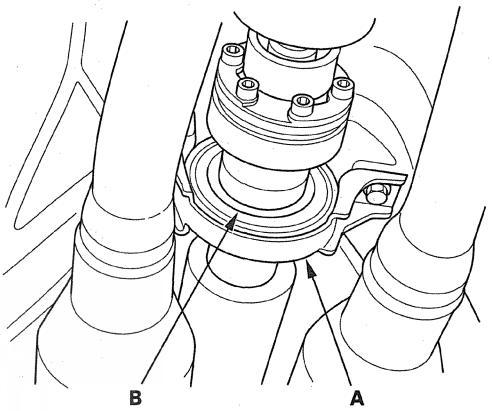

4. Check the rubber portion (B) of the center support bearing for damage and deterioration. If the rubber portion is damaged or deteriorated, replace the propeller shaft assembly.
5. Check the universal joints for excessive play or noise. If the universal joints have excessive play or noise, replace the propeller shaft assembly.

Propeller Shaft

1. Shift the transmission to N.
2. Raise the vehicle on a lift.
3. Inspect the surface of propeller shaft No. 1 and No. 2 for damage. If there is damage, replace the propeller shaft assembly.
4. Inspect the alignment (A) of the No. 1 propeller shaft, especially if the vehicle has been in a collision. If there is difference in alignment, replace the propeller shaft assembly.

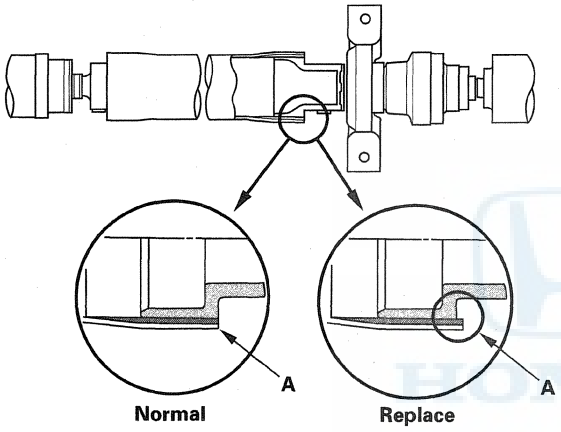

Propeller Shaft Runout

1. Shift the transmission to N.
2. Raise the vehicle on a lift.
3. Install a dial indicator with its needle on the center of the No. 1 propeller shaft or the No. 2 propeller shaft.
4. Turn the other propeller shaft slowly and check the runout. Repeat this procedure for the other propeller shaft.

No. 1 Propeller Shaft Runout
Service Limit: 1.5 mm (0.06 in)

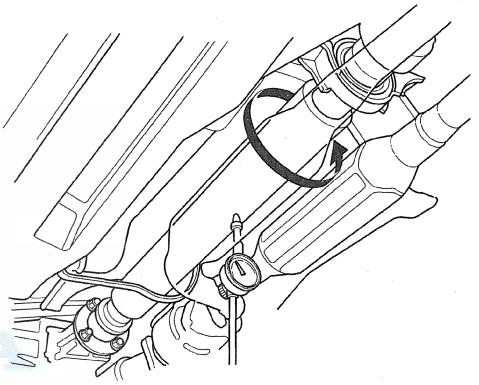

No. 2 Propeller Shaft Runout
Service Limit: 1.5 mm (0.06 in)

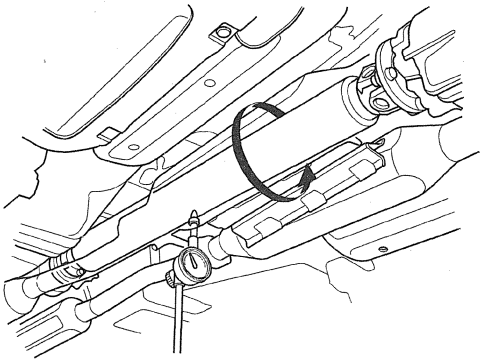

5. If the runout on either propeller shaft exceeds the service limit, replace the propeller shaft assembly.

Propeller Shaft Removal

NOTE: Do not drop or damage the propeller shaft during removal.

1. Raise the vehicle on a lift.
2. Remove the muffler (A) and the exhaust pipe B.

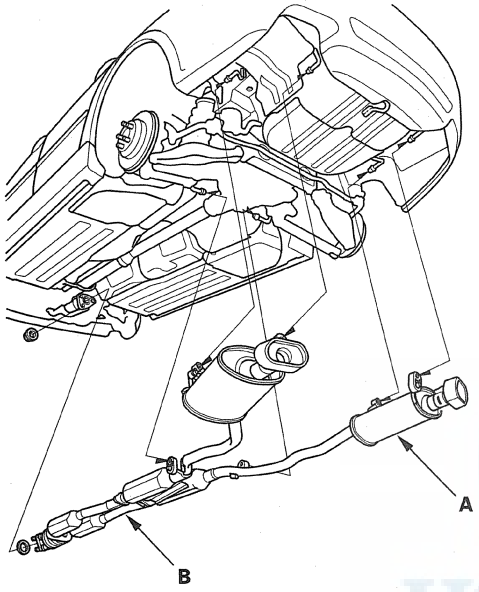

3. Remove the No. 1 propeller shaft protector.

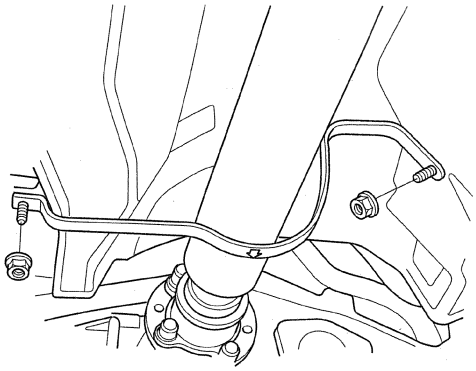

4. Make reference marks (A) across the No. 1 propeller shaft (B) and the transfer companion flange (C).

   NOTE: Wrap the length of each propeller shaft with cardboard, at least 5 mm thick, before removing the propeller shaft.

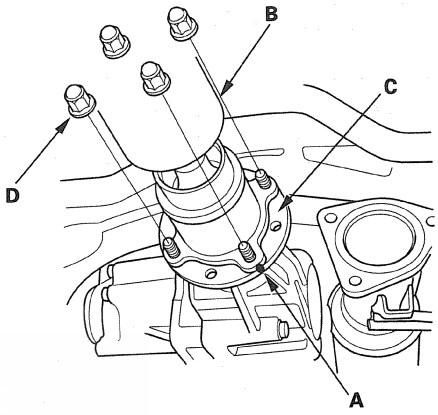

5. Remove the mounting nuts (D).
6. Make reference marks (A) across the No. 2 propeller shaft (B) and the rear differential companion flange (C).

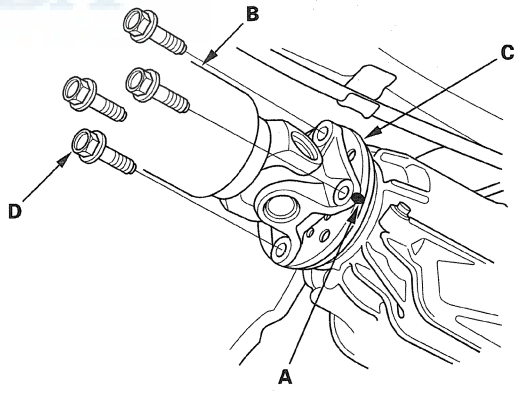

7. Remove the flange bolts (D).

8. Remove the center support bearing mounting bolts.

   NOTE: Do not exceed the angle of center support bearing joint.

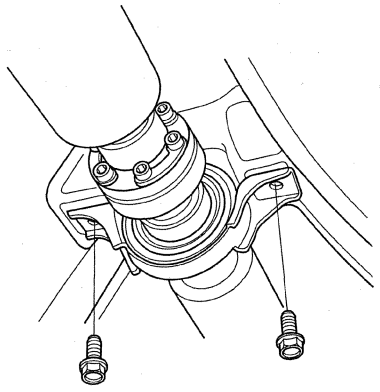

9. Slide the propeller shaft (A) toward the rear differential, then flex the No. 2 joint (B), and remove the No. 1 propeller shaft from the transfer.

   NOTE: Keep the protector on the propeller shaft after removing it from the vehicle. Be careful not to damage the propeller shaft.

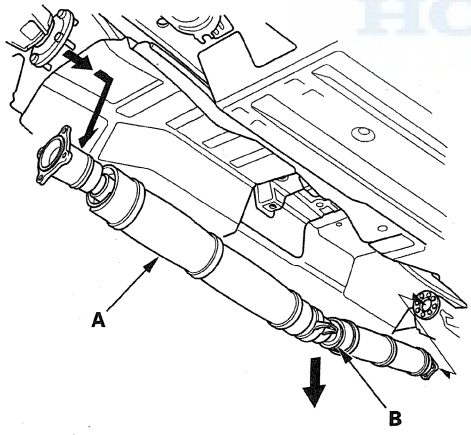

10. Remove the propeller shaft from the vehicle.

Propeller Shaft Installation

NOTE: Wrap the length of each propeller shaft with cardboard, at least 5 mm thick to protect the carbon fiber shaft during removal and installation, before removing the propeller shaft.

1. Set the No. 1 propeller shaft (A) to the transfer companion flange by flexing the No. 2 joint (B), then install the propeller shaft to the vehicle.

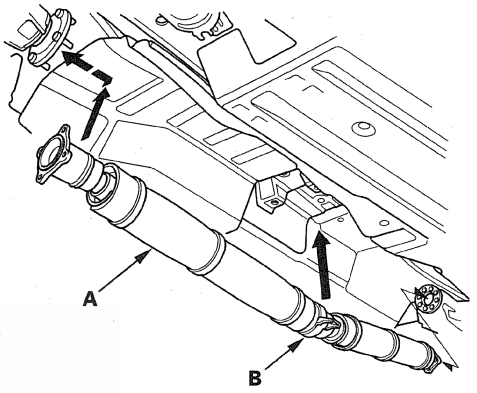

2. Aligning the reference marks (A) you made during the removal procedure. Then install the new mounting nuts (B) finger tight.

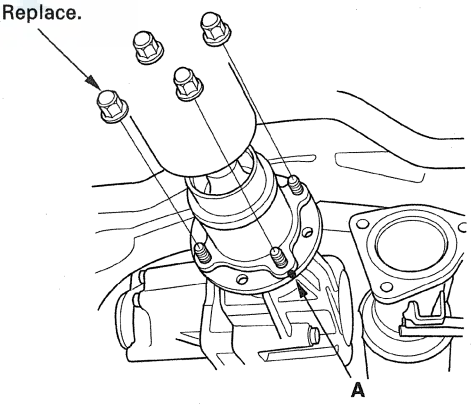

(cont'd)

Propeller Shaft Installation (cont'd)

3. Install the center support bearing mounting bolts. Make sure you use new bolts.

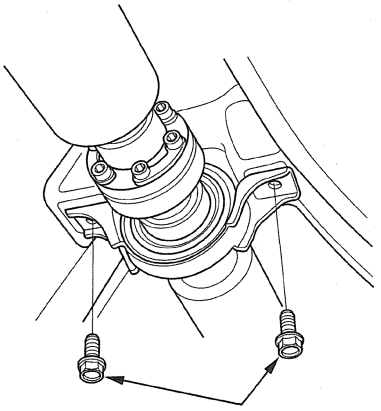

4. Set the No. 2 propeller shaft (A) to the rear differential companion flange (B) by aligning the reference marks (C) you made during the removal procedure. Then install the new flange bolts (D) to the specified torque.

   NOTE: When replacing the propeller shaft or the rear differential, align the factory reference marks (E).

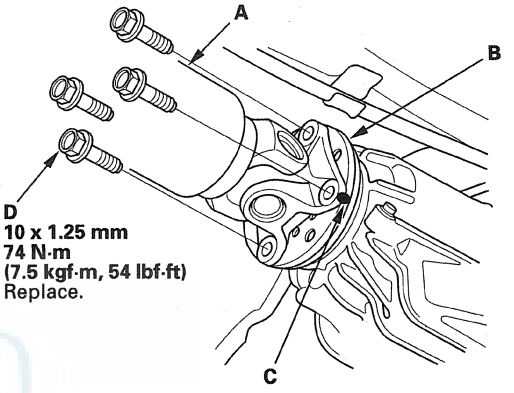

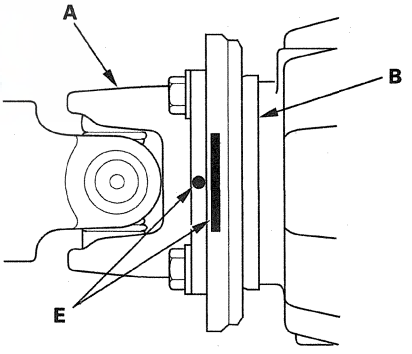

5. Tighten the No. 1 propeller shaft mounting nuts to the specified torque.

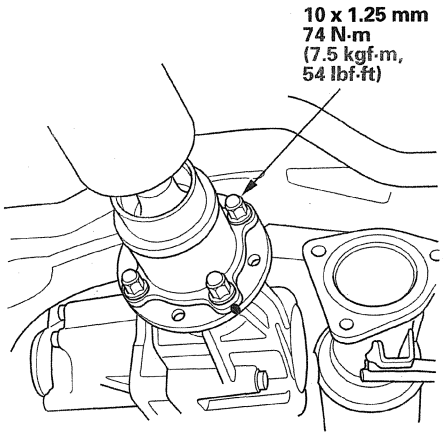

6. Remove the cardboard wrapping from the propeller shaft.

7. Turn the arrow (A) toward the front of the vehicle, and install the No. 1 propeller shaft protector (B).

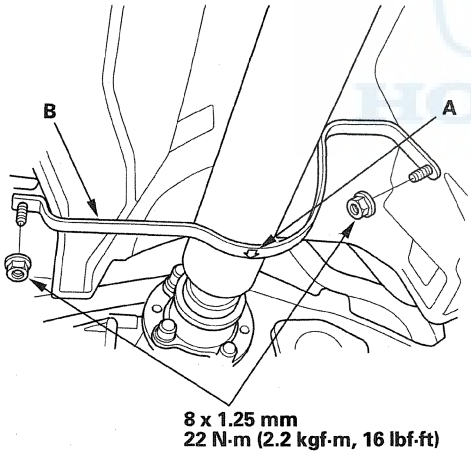

8. Install a new gasket (A), then install the muffler (C) and exhaust pipe B.

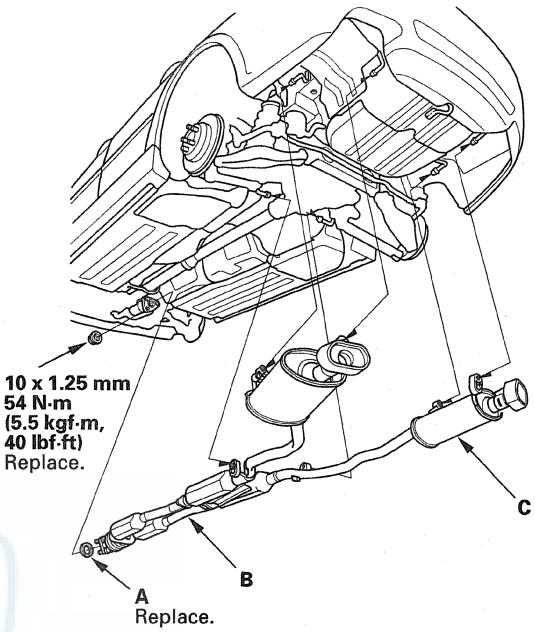

9. If you installed a new propeller shaft, test-drive the vehicle at 55 mph (88 km/h), and check for noise or vibration. If there is a noise or vibration, rotate the propeller shaft 180 degrees from its current alignment with the rear differential companion flange, then recheck.

NOTES

" Portions of materials contained herein have been reprinted under license from America Honda Motor Co., Inc. License Agreement AH220 ."

Navigation Tools: Click on the "Table of Contents" below, or use the Bookmarks to the left.

INTRODUCTION

How to Use This Manual

This manual is divided into multiple sections. The first page of each section is marked with a black tab that lines up with its corresponding thumb index tab on this page and the back cover. You can quickly find the first page of each section without looking through a full table of contents. The symbols printed at the top corner of each page can also be used as a quick reference system.
Each section includes:

1. A table of contents, or an exploded view index showing:
   - Parts disassembly sequence.
   - Bolt torques and thread sizes.
   - Page references to descriptions in text.
2. Disassembly/assembly procedures and tools.
3. Inspection.
4. Testing/troubleshooting.
5. Repair.
6. Adjustments.

Safety Messages

Your safety, and the safety of others, is very important. To help you make informed decisions, we have provided safety messages, and other safety information throughout this manual. Of course, it is not practical or possible to warn you about all the hazards associated with servicing this vehicle. You must use your own good judgment.
You will find important safety information in a variety of forms including:

- **Safety Labels** — on the vehicle.
- **Safety Messages** — preceded by a safety alert symbol ⚠ and one of three signal words, DANGER, WARNING, or CAUTION. These signal words mean:

⚠ DANGER	You WILL be KILLED or SERIOUSLY HURT if you don't follow instructions.
⚠ WARNING	You CAN be KILLED or SERIOUSLY HURT if you don't follow instructions.
⚠ CAUTION	You CAN be HURT if you don't follow instructions.

- **Instructions** — how to service this vehicle correctly and safely.

All information contained in this manual is based on the latest product information available at the time of printing. We reserve the right to make changes at anytime without notice. No part of this publication may be reproduced, or stored in a retrieval system, or transmitted, in any form by any means, electronic, mechanical, photocopying, recording, or otherwise, without the prior written permission of the publisher. This includes text, figures, and tables.

As you read this manual, you will find information that is preceded by a NOTICE symbol. The purpose of this message is to help prevent damage to your vehicle, other property, or the environment.

First Edition 05/2009
All Rights Reserved
Specifications apply to USA and Canada

Honda Motor Co., Ltd.
Service Publication Office

As sections with * include SRS components; special precautions are required when servicing.

marked sections are not included in this manual, see Volume 1.

General Information
Specifications
Maintenance
*Engine Electrical
Engine Mechanical
Engine Cooling
Fuel and Emissions
*Transaxle
*Steering
Suspension (Including TPMS)
Brakes (Including VSA)
*Body
*Heating, Ventilation, and Air Conditioning
*Body Electrical
*Audio, Navigation, and Telematics
*Restraints
*Driving Support

2009-10 Acura RL
Vol . 2 of 2

SUPPLEMENTAL RESTRAINT SYSTEM (SRS) (If steering maintenance is required)

The Acura RL SRS includes a driver's airbag in the steering wheel hub, a passenger's airbag in the dashboard above the glove box, seat belt tensioners in the front seat belt retractors, side curtain airbags in the sides of the roof, and side airbags in the front seat-backs. Information necessary to safely service the SRS is included in this Service Manual. Items marked with an asterisk (*) on the contents page include or are located near SRS components. Servicing, disassembling, or replacing these items require special precautions and tools, and should be done by an authorized Acura dealer.

- To avoid rendering the SRS inoperative, which could lead to personal injury or death in the event of a severe frontal or side collision, all SRS service work should be done by an authorized Acura dealer.
- Improper service procedures, including incorrect removal and installation of the SRS, could lead to personal injury caused by unintentional deployment of the airbags, side airbags, and/or side curtain airbags.
- Do not bump or impact the SRS unit, front impact sensors, side impact sensors, or rear safing sensor, especially when the ignition switch is in ON (II), or for at least 3 minutes after the ignition switch is turned to LOCK (0); otherwise, the system may fail in a collision, or the airbags may deploy.
- SRS electrical connectors are identified by yellow color coding. Related components are located in the steering column, center console, dashboard, driver's dashboard lower cover, in the dashboard above the glove box, in the front seats, in the roof side, and around the floor. Do not use electrical test equipment on these circuits.

HONDA

Steering

Power Steering

Special Tools 17-2
Component Location Index 17-3
Symptom Troubleshooting Index 17-4
Symptom Troubleshooting 17-7
Steering Wheel Rotational Play Check 17-8
Power Assist Check 17-8
Steering Linkage and Gearbox Inspection 17-9
Pump Pressure Test with T/N 07406-0010001 17-10
Pump Pressure Test with T/N 07406-001000A or T/N 07406-001A101 17-11
Fluid Leakage Inspection 17-12
Fluid Check/Replacement 17-13
Power Steering Hose, Line, and Pressure Switch Replacement 17-14
Pump Replacement 17-15
Pump Overhaul 17-17
* Steering Wheel Removal 17-22
Steering Wheel Disassembly/Reassembly 17-23
* Steering Wheel Installation 17-24
* Steering Column Removal and Installation 17-25
* Steering Shaft Removal and Installation 17-29
Steering Column Position Memorization 17-32
Steering Column Inspection 17-32
Steering Lock Replacement 17-33
Rack Guide Adjustment 17-33
Steering Gearbox Removal 17-35
Steering Gearbox Overhaul 17-41
Steering Gearbox Installation 17-57
Tie-rod End Ball Joint Boot Replacement 17-64
Gearbox Mount Cushion Replacement 17-64

Electronically Controlled Power Steering System (ECPS)

Component Location Index 17-65
System Description 17-66
Circuit Diagram 17-70
Symptom Troubleshooting 17-71
ECPS Control Unit Removal/Installation 17-74

Special Tools

Ref. No.	Tool Number	Description	Qty
①	07AAF-SDAA100	Ball Joint Thread Protector, 12 mm	1
②	07HAG-SF10100 or 07HAG-SF1010A	Piston Seal Ring Guide	1
③	07HAG-SF1020A or 07HAG-SF10200	Piston Seal Ring Sizing Tool	1
④	07MAA-SL00100	Locknut Wrench, 40mm	1
⑤	07MAC-SL0A102	Ball Joint Remover, 32 mm	1
⑥	07NAD-SR3020A	Cylinder End Seal Remover Attachment	1
⑦	07NAG-SR3090A	Valve Seal Ring Sizing Tool	1
⑧	07VAK-P8A011A	P/S Joint Adapter (Pump)	1
⑨	07VAK-P8A012B	P/S Joint Adapter Plate (Pump)	1
⑩	07RAK-S040122	P/S Joint Adapter (Hose)	1
⑪	07ZAG-S5A0300	Cylinder End Seal Slider	1
⑫	07406-0010001 or 07406-001000A or 07406-001A101	P/S Pressure Gauge	1
⑬	07746-0010100	Attachment, 32 x 35 mm	1
⑭	07746-0010700	Attachment, 24 x 26 mm	1
⑮	07749-0010000	Driver	1
⑯	07965-SA50500	Front Hub Dis/Assembly Tool	1
⑰	07974-SA5020A or 07974-SA50200	Sleeve Seal Ring Sizing Tool	1
⑱	07974-SA50800	Ball Joint Boot Clip Guide	1

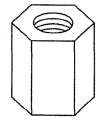
①

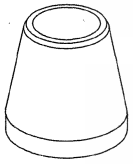
②

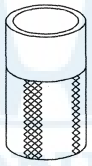
③

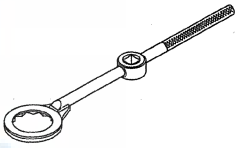
④


⑤

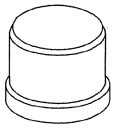
⑥

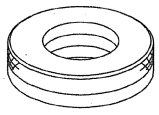
⑦

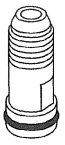
⑧

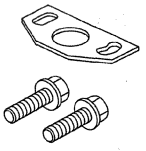
⑨

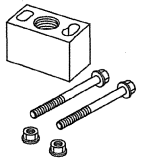
⑩

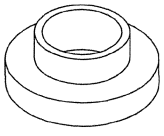
⑪

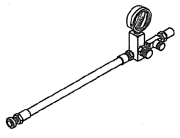
⑫

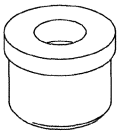
⑬

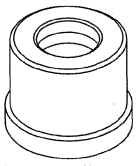
⑭

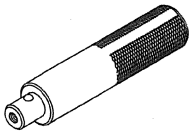
⑮

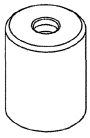
⑯

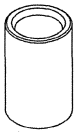
⑰

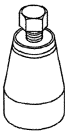
⑱

Component Location Index

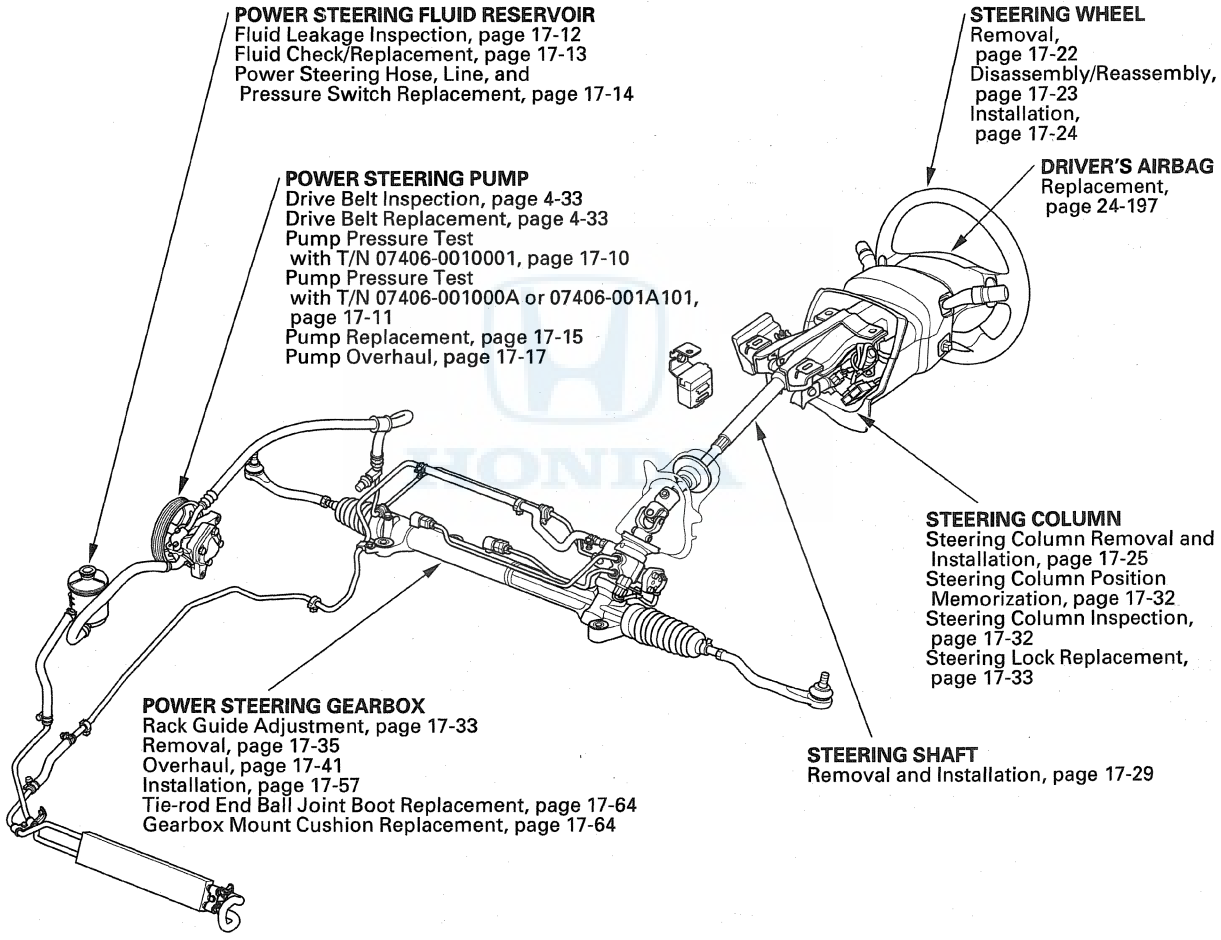

Power Steering

Symptom Troubleshooting Index

Find the symptom in the chart below, and do the related procedures in the order listed until you find the cause.

Symptom	Procedure(s)	Also check for:
Hard steering	Troubleshoot the system (see page 17-7).	• Modified suspension • Damaged suspension • Tire sizes, tire varieties, and air pressure
Assist (excessively light steering at high speed)	Check the rack guide adjustment (see page 17-33).	• Front wheel alignment (see page 18-5)
Shock or vibration when the steering wheel is turned to full lock	1. Check the drive belt for slippage (see page 4-33). 2. Check the power steering pump fluid pressure with T/N 07406-0010001 (see page 17-10), T/N 07406-001000A or T/N 07406-001A101 (see page 17-11). 3. Check the rack guide adjustment (see page 17-33). 4. Overhaul the steering gearbox (see page 17-41).	
Steering wheel will not return smoothly	1. Check cylinder lines for deformation (see page 17-14). 2. Check upper and lower ball joints for binding. 3. Check wheel alignment (see page 18-5). 4. Overhaul the steering gearbox (see page 17-41).	Damaged suspension
Uneven or rough steering	1. Check for low fluid level in the power steering reservoir due to possible leaks in system (see page 17-13). 2. Check the drive belt (see page 4-33). 3. Check for low or erratic engine idle speed (see page 11-312). 4. Check for air in the power steering system due to air entering inlet side of pump. 5. Check the rack guide adjustment (see page 17-33). 6. Overhaul the steering gearbox (see page 17-41).	
Steering wheel kicks back during wide turns	1. Check the drive belt (see page 4-33). 2. Check the power steering pump fluid pressure with T/N 07406-0010001 (see page 17-10), T/N 07406-001000A or T/N 07406-001A101 (see page 17-11).	
Humming noise from the power steering system	1. Check when the noise occurs: • If the noise is heard during the first 2—3 minutes after starting the engine in cold weather, this is normal. • If the noise is heard when the wheel is turned with the vehicle stopped, this is normal due to the fluid pulsation. 2. Check for the high-pressure hose touching the subframe or body. 3. Check for automatic transmission torque converter noise. 4. Check for air bubbles in the power steering fluid, leak on inlet side of pump. 5. Check for particle contamination of the fluid and/or restricted filter in the reservoir.	• Pump pressure • Fuel contamination – Restriction in the high-pressure line – Restriction in the low-pressure line

Symptom	Procedure(s)	Also check for:
Power steering rack rattle or chattering	1. Check for loose steering components (tie-rod and ball joints). Tighten or replace as necessary. 2. Check the steering column shaft for wobbling. If the steering column wobbles, replace the steering column assembly (see page 17-25). 3. Check the rack guide adjustment (see page 17-33). 4. Check the power steering pump pulley: If the pump shaft is loose, replace the pump (see page 17-15).	
Hissing from the power steering system/foaming fluid	• Check the fluid level. If low, fill the reservoir to the proper level, and check for leaks (see page 17-13). • Check the reservoir for leaks. • Check for crushed inlet hose or loose hose clamp allowing air into the suction side of the system (see page 17-14). • Check the power steering pump shaft oil seal for leaks.	• Air in the P/S fluid • Fluid contamination
Noise from the power steering pump	• Compare the pump noise at normal operating temperature to another like vehicle (pump noise for 2—3 minutes after starting the engine in cold weather is normal). • Remove, and inspect the pump for wear and damage (see page 17-17).	• P/S pump pressure • Air in the P/S fluid
Squeaking from the power steering pump	Check the drive belt (see page 4-33).	
Fluid leaks from the steering gearbox	• Fluid leaks from the top of the valve body unit. Overhaul the valve body unit (see step 22 on page 17-46). • Fluid leaks from the driver's side boot. Replace the valve oil seal on the pinion shaft. Replace the cylinder end seal on the gearbox side (see page 17-41). • Fluid leaks from the passenger's side boot. Replace the right cylinder end seal (see page 17-41). • Fluid leaks from pinion shaft near the lower steering joint bolt. Overhaul the valve body unit (see step 22 on page 17-46). • Fluid leaks from the steering damping valve covers on the valve body unit. Replace the valve housing.	Fluid contamination
Fluid leaks from the power steering line	• Fluid leaks from the cylinder line connections (flare nuts). Tighten the connection, and retest (see page 17-14). • Fluid leaks from a damaged cylinder line(s). Replace the cylinder line (see page 17-14). • Fluid leaks from the pump outlet hose or return line fitting on the valve body unit (flare nuts). Tighten the fitting, and retest. If it still leaks, replace the hose, the line (see page 17-14), or valve body unit as necessary.	Fluid contamination
Fluid leaks from the power steering pump	• Fluid leaks from the pump cover seal. Replace the pump cover seal (see page 17-17). • Fluid leaks from the power steering pump housing. Replace the leaking O-rings or seals (see page 17-17), and if necessary replace the power steering pump (see page 17-15).	Fluid contamination
Fluid leaks from the power steering reservoir	• Fluid leaks from around the reservoir cap because fluid level is too high. Drain the reservoir to the proper level. If the fluid is aerated check for an air leak on the inlet side of pump. • Fluid leaks from reservoir. Check the reservoir for cracks, and replace as necessary.	Fluid contamination

(cont'd)

Symptom Troubleshooting Index (cont'd)

Symptom	Procedure(s)	Also check for:
Fluid leaks from the power steering pump outlet hose (high-pressure)	• Check the fitting for loose bolts. If the bolts are tight, replace the fitting O-ring (see page 17-14). • Fluid leaks at the swaged joint. Replace the outlet hose (see page 17-14).	Fluid contamination
Fluid leaks from the power steering pump inlet hose (low-pressure)	Check the hose for damage, deterioration, or improper assembly (see page 17-14). Replace or repair as necessary.	Fluid contamination
ECPS indicator does not go off after the engine is started	Symptom troubleshooting (see page 17-71).	
ECPS indicator comes on while driving the vehicle, but the ECPS indicator goes off after the engine is restarted	Symptom troubleshooting (see page 17-73).	
ECPS indicator comes on, but there is no power assist	Symptom troubleshooting (see page 17-74).	

Symptom Troubleshooting

Hard Steering

1. Check the power assist (see page 17-8).

   Is the initial turning load more than 29 N (3.0 kgf, 6.6 lbf)?

   YES—Go to step 2.
   NO—Power assist is OK. ■

2. Connect the P/S joint adapter (pump), the P/S joint adapter (hose), and P/S pressure gauge T/N 07406-0010001 (see page 17-10), T/N 07406-001000A or T/N 07406-001A101 (see page 17-11) to the pump.

3. Measure steady-state fluid pressure from the pump at idle.

   Is the pressure 1,470 kPa (15 kgf/cm², 213 psi) or less?

   YES—Go to step 4.
   NO—Go to step 8.

4. Measure the pump relief pressure at idle.

   Is the pressure 9,400– 9,800 kPa (96– 100 kgf/cm², 1,365– 1,422 psi) or more?

   YES—Go to step 5.
   NO—Go to step 9.

5. Using a spring scale, measure the power assist in both directions, to the left and to the right.

   Are the two measurements within 5.0 N (0.51 kgf, 1.12 lbf) of each other?

   YES—Go to step 6.
   NO—Go to step 11.

6. Measure the fluid pressure with both pressure gauge valves open (if so equipped), while turning the steering wheel fully to the left and fully to the right.

   Is the pressure 9,400– 9,800 kPa (96– 100 kgf/cm², 1,365– 1,422 psi) or more?

   YES—Go to step 7.
   NO—Faulty steering gearbox. ■

7. Adjust the rack guide (see page 17-33), and retest.

   Is the steering OK?

   YES—Repair is completed. ■

   NO—Faulty steering gearbox. ■

8. Check the feed and return lines between the pump and the steering gearbox for clogging and deformation.

   Are the lines clogged or deformed?

   YES—Repair or replace the lines. ■

   NO—Faulty valve body unit. ■

9. Disassemble the pump (see page 17-18).

10. Check the flow control valve for smooth movement and leaks (see step 9 on page 17-18).

    Is the flow control valve OK?

    YES—Faulty pump assembly. ■

    NO—Faulty flow control valve. ■

11. Check the cylinder lines A and B for deformation (see page 17-14).

    Are the A or B lines deformed?

    YES—Replace the lines. ■

    NO—Go to step 12.

12. Check for a bent rack shaft or misadjusted rack guide (too tight).

    Is the rack shaft bent or the rack guide adjusted too tight?

    YES—Replace the rack shaft or readjust the rack guide. ■

    NO—Faulty valve body unit. ■

Steering Wheel Rotational Play Check

1. Turn the front wheels to the straight ahead position.
2. Measure how far you can turn the steering wheel left and right without moving the front wheels.
   - If the play is within the limit, the steering gearbox and linkages are OK.
   - If the play exceeds the limit, adjust the rack guide (see page 17-33). If the play is still excessive after rack guide adjustment, inspect the steering linkage and steering gearbox (see page 17-9).

Rotational play: 0—10 mm (0—0.39 in)

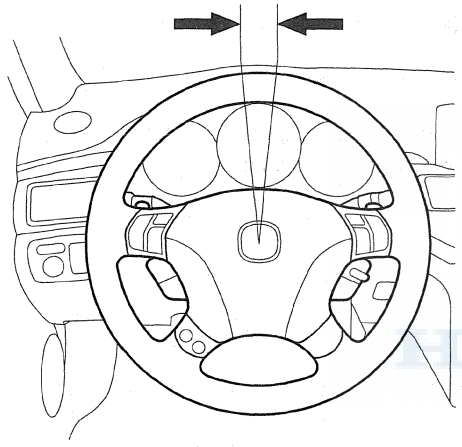

Power Assist Check

NOTE: This test should be done with original equipment tires and wheels at the correct tire pressure.

1. Check the power steering fluid level (see page 17-13).
2. Start the engine, let it idle, and turn the steering wheel from lock-to-lock several times to warm up the fluid.
3. Attach a commercially available spring scale to the steering wheel. With the engine idling and the vehicle on a clean, dry floor, pull the scale as shown and read it as soon as the tires begin to turn.
   - If the scale reads no more than the specification, the steering gearbox and pump are OK.
   - If the scale reads more than the specification, troubleshoot the steering system (see page 17-7).

Initial turning load: 29 N (3.0 kgf, 6.6 lbf)

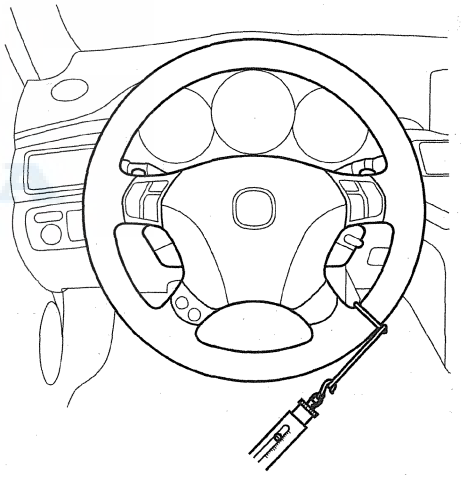

Steering Linkage and Gearbox Inspection

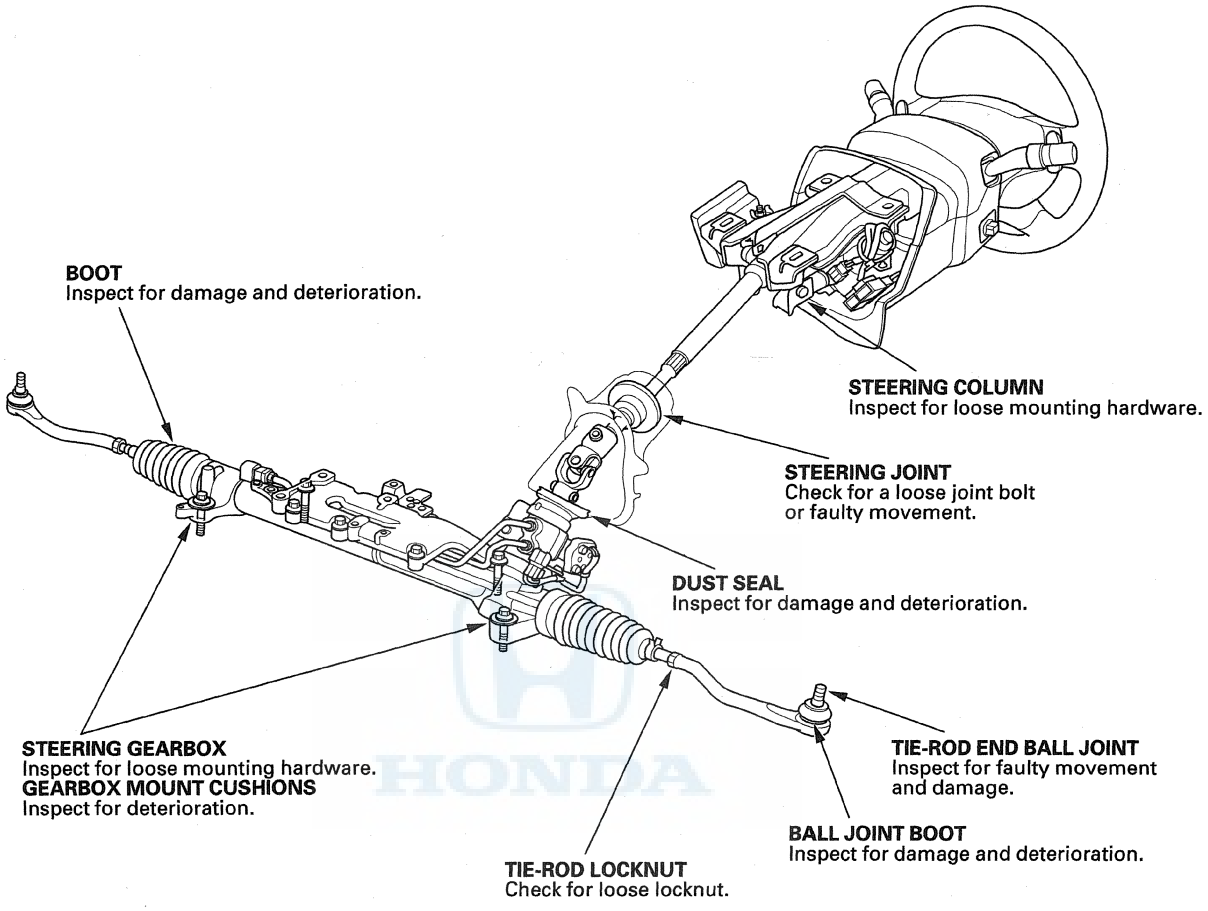

Pump Pressure Test with T/N 07406-0010001

Special Tools Required
- P/S joint adapter (pump) 07VAK-P8A011A
- P/S joint adapter plate (pump) 07VAK-P8A012B
- P/S joint adapter (hose) 07RAK-S040122
- P/S pressure gauge 07406-0010001

Check the fluid pressure as follows to determine whether the trouble is in the pump or steering gearbox.

1. Remove the right upper fender trim (A) (see page 20-162).

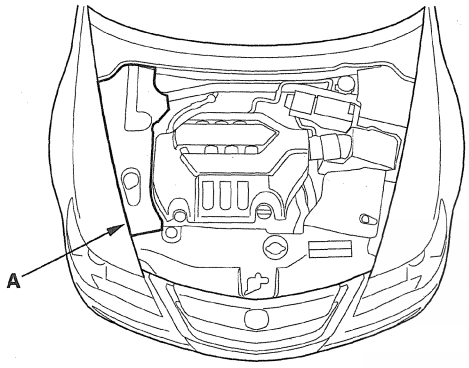

2. Check the power steering fluid level (see page 17-13).

3. Disconnect the pump outlet hose (A) from the pump outlet with care so as not to spill the power steering fluid on the frame and other parts, then install the P/S joint adapter (pump) on the pump outlet (B) with the P/S joint outlet plate.

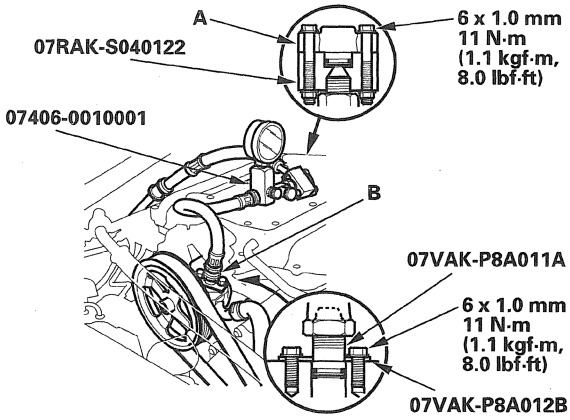

4. Connect the P/S joint adapter (hose) to the P/S pressure gauge, then connect the pump outlet hose to the P/S joint adapter (hose).

5. Install the P/S pressure gauge to the P/S joint adapter (pump).

6. Fully open the shut-off valve (A).

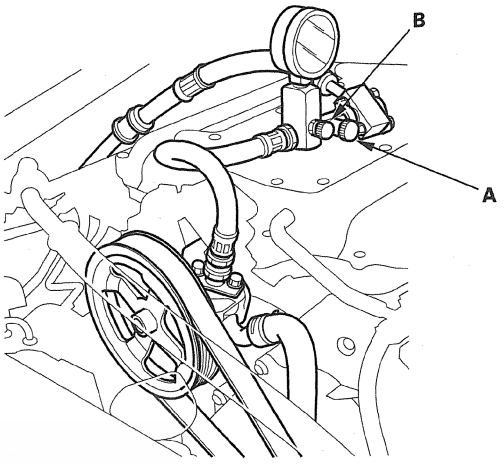

7. Fully open the pressure control valve (B).

8. Start the engine, and let it idle.

9. Turn the steering wheel from lock-to-lock several times to warm the fluid to operating temperature.

10. Measure steady-state fluid pressure while the engine is idling. If the pump is in good condition, the gauge should read no more than 1,470 kPa (15 kgf/cm², 213 psi).
    If it reads high, check for:
    - Clogged or deformed feed or return lines between the pump and the steering gearbox.
    - Clogged valve body unit.

11. Close the shut-off valve, then close the pressure control valve gradually until the pressure gauge needle is stable. Read the pressure.

    NOTICE
    Do not keep the shut-off valve closed for more than 5 seconds or the pump could be damaged by over-heating.

12. Immediately open the shut-off valve fully. If the pump is in good condition, the gauge should read at least 9,400—9,800 kPa (96—100 kgf/cm², 1,365—1,422 psi). A low reading means the pump output is too low for full assist. Repair or replace the pump.

Pump Pressure Test with T/N 07406-001000A or T/N 07406-001A101

Special Tools Required
- P/S joint adapter (pump) 07VAK-P8A011A
- P/S joint adapter plate (pump) 07VAK-P8A012B
- P/S joint adapter (hose) 07RAK-S040122
- P/S pressure gauge 07406-001000A or 07406-001A101

Check the fluid pressure as follows to determine whether the trouble is in the pump or the steering gearbox.

1. Remove the right upper fender trim (A) (see page 20-162).

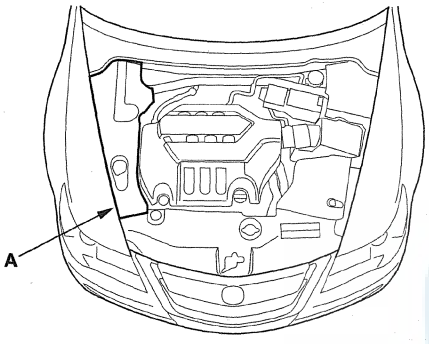

2. Check the power steering fluid level (see page 17-13).

3. Disconnect the pump outlet hose (A) from the pump outlet with care so as not to spill the power steering fluid on the frame and other parts, then install the P/S joint adapter (pump) on the pump outlet (B) with the P/S joint outlet plate.

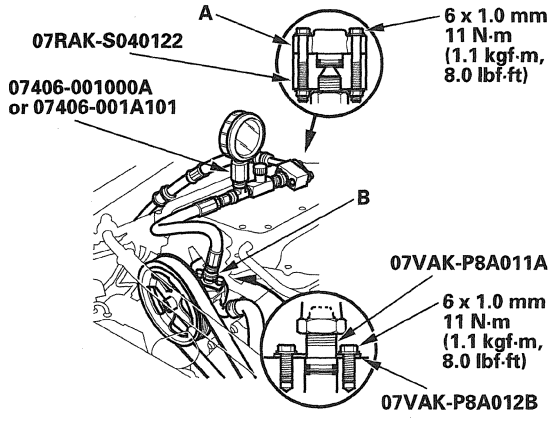

4. Connect the P/S joint adapter (hose) to the P/S pressure gauge, then connect the pump outlet hose to the P/S joint adapter (hose).

5. Install the P/S pressure gauge to the P/S joint adapter (pump).

6. Open the shut-off valve (A) fully.

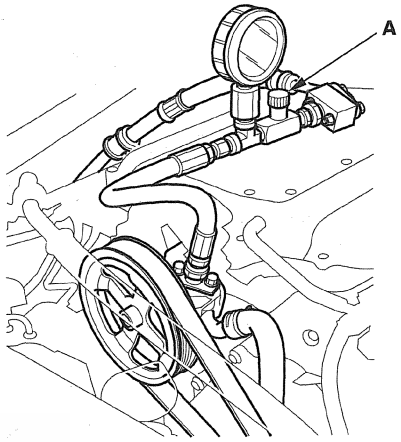

7. Start the engine, and let it idle.

8. Turn the steering wheel from lock-to-lock several times to warm the fluid to operating temperature.

9. Measure steady-state fluid pressure while the engine is idling. If the pump is in good condition, the gauge should read no more than 1,470 kPa (15 kgf/cm², 213 psi).
   If it reads high, check for:
   - Clogged or deformed feed or return lines between the pump and the gearbox.
   - Clogged valve body unit.

10. Let the engine idle, and gradually close the shut-off valve and immediately read the pressure.

NOTICE
Do not keep the shut-off valve closed for more than 5 seconds or the pump could be damaged by over-heating.

11. Immediately open the shut-off valve fully. If the pump is in good condition, the gauge should read at least 9,400—9,800 kPa (96—100 kgf/cm², 1,365—1,422 psi). A low reading means the pump output is too low for full assist. Repair or replace the pump.

Fluid Leakage Inspection

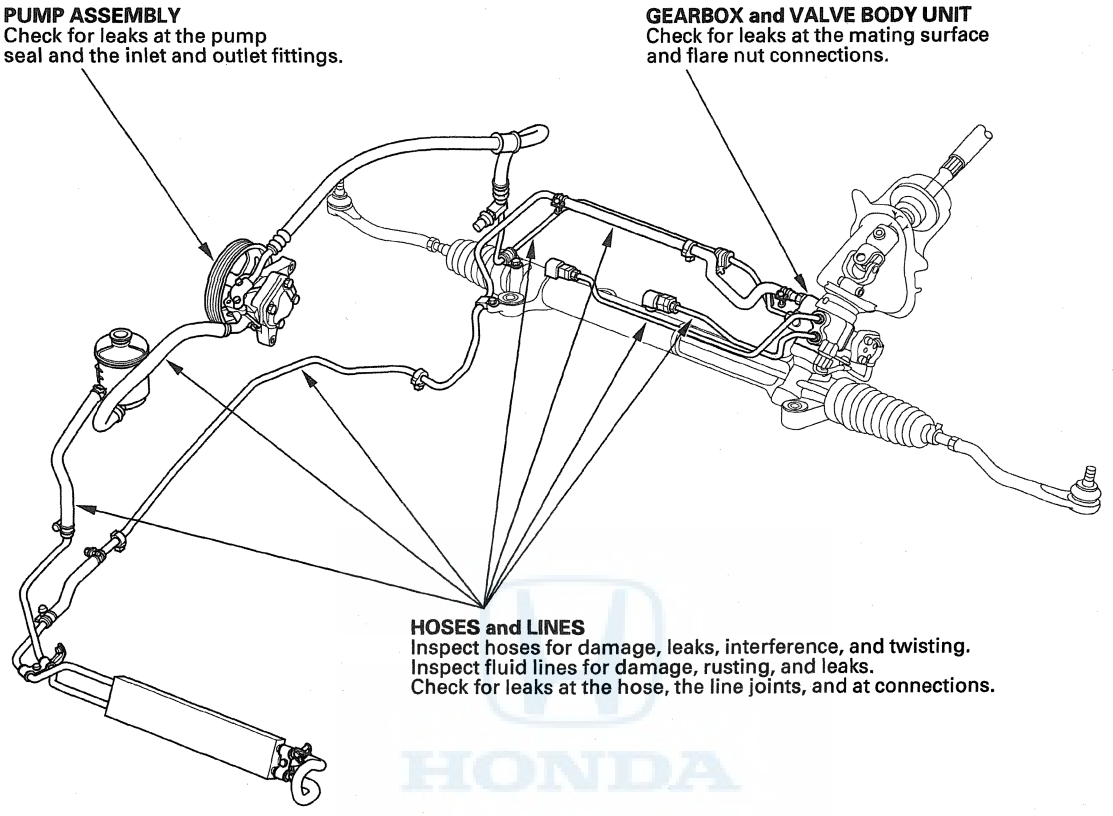

Fluid Check/Replacement

1. Remove the right upper fender trim (A) (see page 20-162).

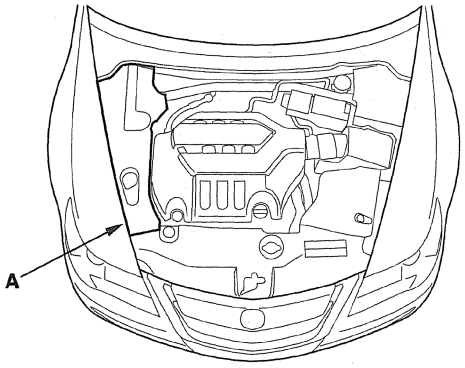

2. Check the reservoir (A) at regular intervals, and add the recommended fluid as necessary to fill the reservoir to the upper level line (B). Always use Acura Power Steering Fluid. Using any other type of power steering fluid or automatic transmission fluid can cause increased wear, and poor steering in cold weather.

   NOTE: If the fluid is dirty or contaminated, replace the fluid, go to step 3.

   System capacity:
   1.1 L (1.2 US. qt) at disassembly
   Reservoir capacity:
   0.32 L (0.34 US. qt)

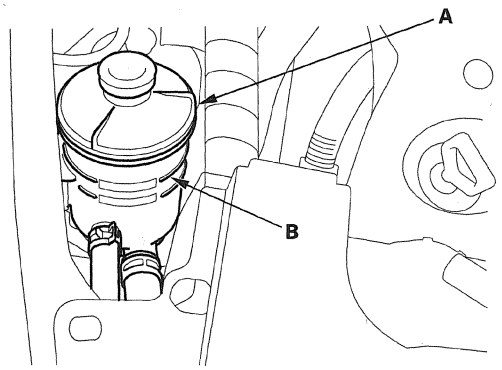

3. Raise the reservoir, then disconnect the return hose (A) to drain the reservoir. Take care not to spill the fluid on the body and parts. Wipe off any spilled fluid at once.

   NOTE: Inspect the reservoir screen for any debris. If the reservoir screen is clogged, replace the reservoir.

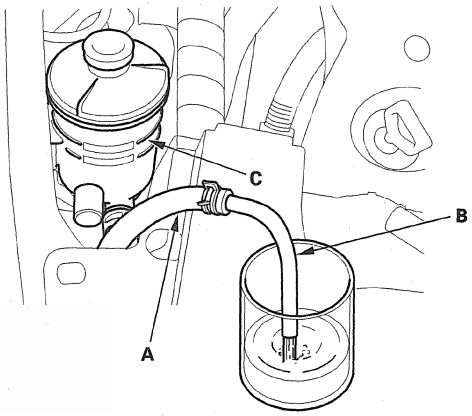

4. Connect a hose (B) of suitable diameter to the disconnected return hose, and put the hose end in a suitable container.

5. Start the engine, let it run at idle, and turn the steering wheel from lock-to-lock several times. When fluid stops running out of the hose, shut off the engine. Discard the fluid.

   NOTE: Stop the motor immediately once the fluid stops running out of the hose to prevent pump damage.

6. Reinstall the return hose on the reservoir.

7. Fill the reservoir to the upper level line (C).

8. Start the engine and run it at fast idle, then turn the steering from lock-to-lock several times to bleed air from the system.

9. Recheck the fluid level and add some if necessary. Do not fill the reservoir beyond the upper level line.

10. If the fluid is contaminated, dark, or discolored, repeat the procedure as necessary until the system is clean.

11. Install the right upper fender trim (see page 20-162).

Power Steering Hose, Line, and Pressure Switch Replacement

Note these items during installation:

- Connect each hose to the corresponding line securely until it contacts the stop on the line. Install the clamp or adjustable clamp at the specified distance from the hose end as shown.
- Check all clamps for deterioration or deformation; replace the clamps with new ones if necessary.
- Add the recommended power steering fluid to the specified level on the reservoir and check for leaks.

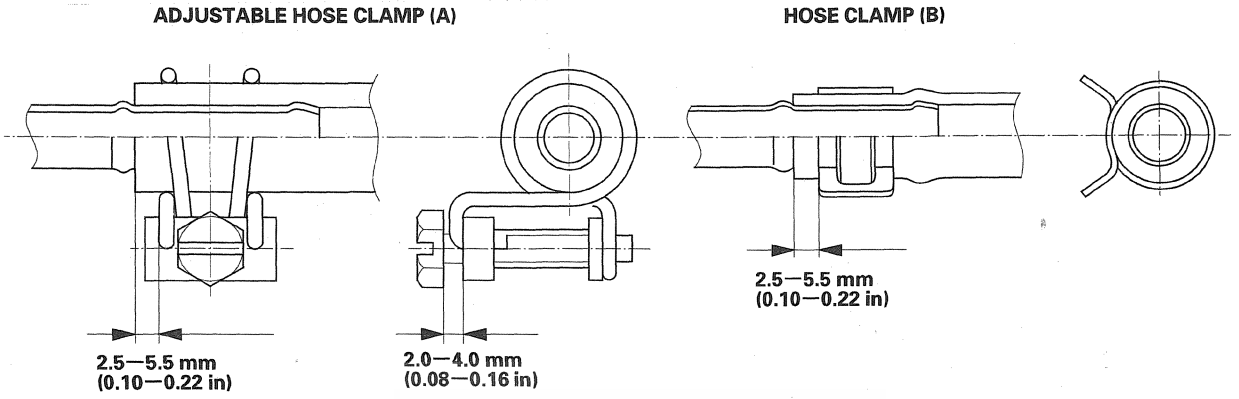

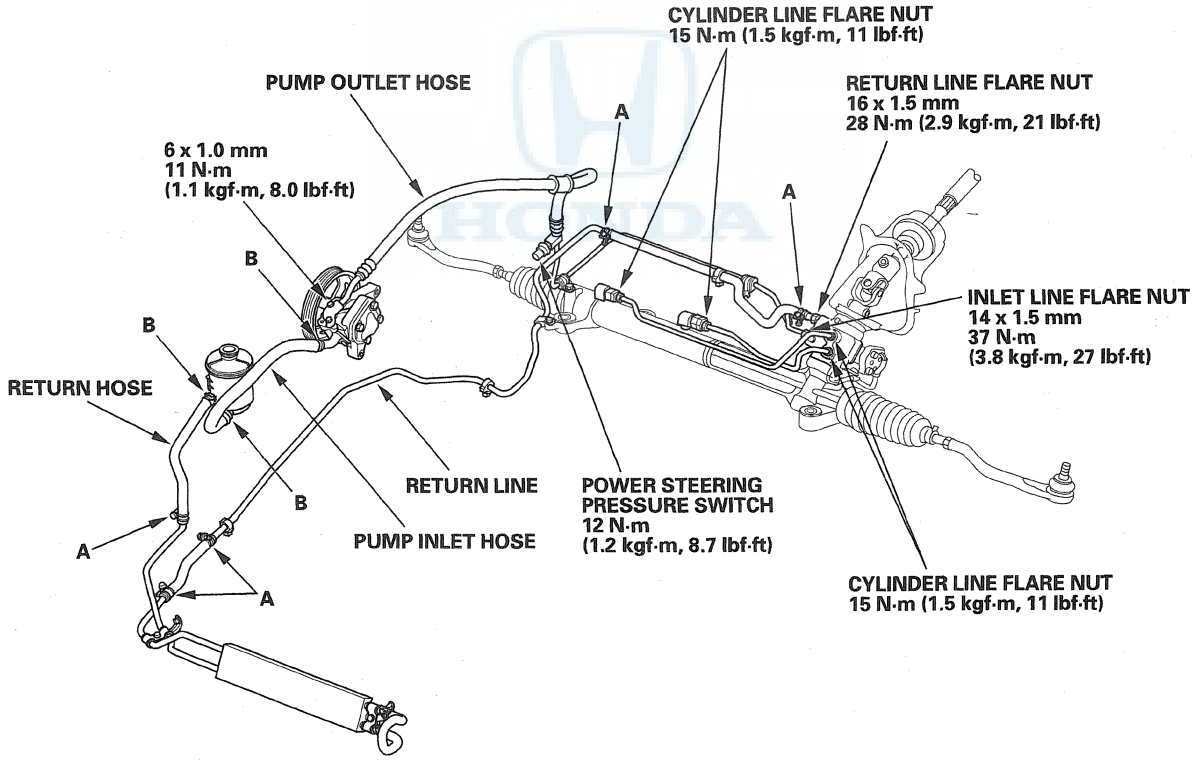

Pump Replacement

1. Place a suitable container under the vehicle.

2. Remove the right upper fender trim (A) (see page 20-162).

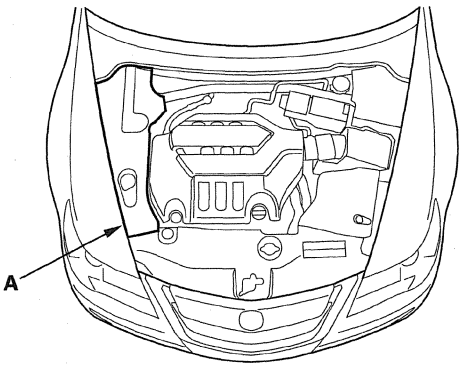

3. Drain the power steering fluid from the reservoir.

4. Remove the drive belt (A) from the pump pulley (see page 4-33).

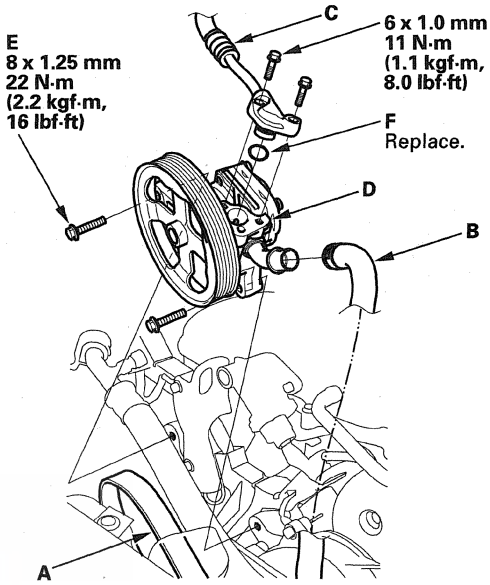

5. Cover the auto-tensioner, the alternator, and the A/C compressor with several shop towels to protect them from spilled power steering fluid. Disconnect the pump inlet hose (B) and the pump outlet hose (C) from the pump (D), and plug them. Take care not to spill the fluid on the body or parts. Wipe off any spilled fluid at once. Do not turn the steering wheel with the pump removed.

6. Cover the opening of the pump with a piece of tape to prevent foreign material from entering the pump.

7. Remove the pump mounting bolts (E), then remove the pump.

8. Connect the pump inlet hose and the pump outlet hose onto the new pump with a new O-ring (F).

9. Loosely install the pump in the pump bracket with the mounting bolts, then tighten the pump fittings securely.

(cont'd)

Pump Replacement (cont'd)

10. Tighten the pump mounting bolts to the specified torque.

11. Install the drive belt (A).

    Note these items during belt installation:
    - Inspect the belt for wear and cracks. Replace the belt if necessary.
    - Make sure that the belt is properly positioned on the pulleys (B).
    - Do not get power steering fluid or grease on the auto-tensioner, alternator, A/C compressor, and drive belt or pulley faces. Clean off any fluid or grease before installation.

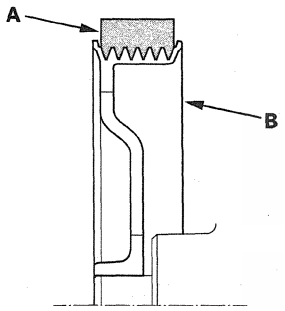

12. Fill the reservoir to the upper level line (see page 17-13).

13. Start the engine, and check for fluid leaks.

14. Install the right upper fender trim (see page 20-162).

Pump Overhaul

Exploded View

Replace the pump as an assembly if the parts indicated with an asterisk (*) are worn or damaged.

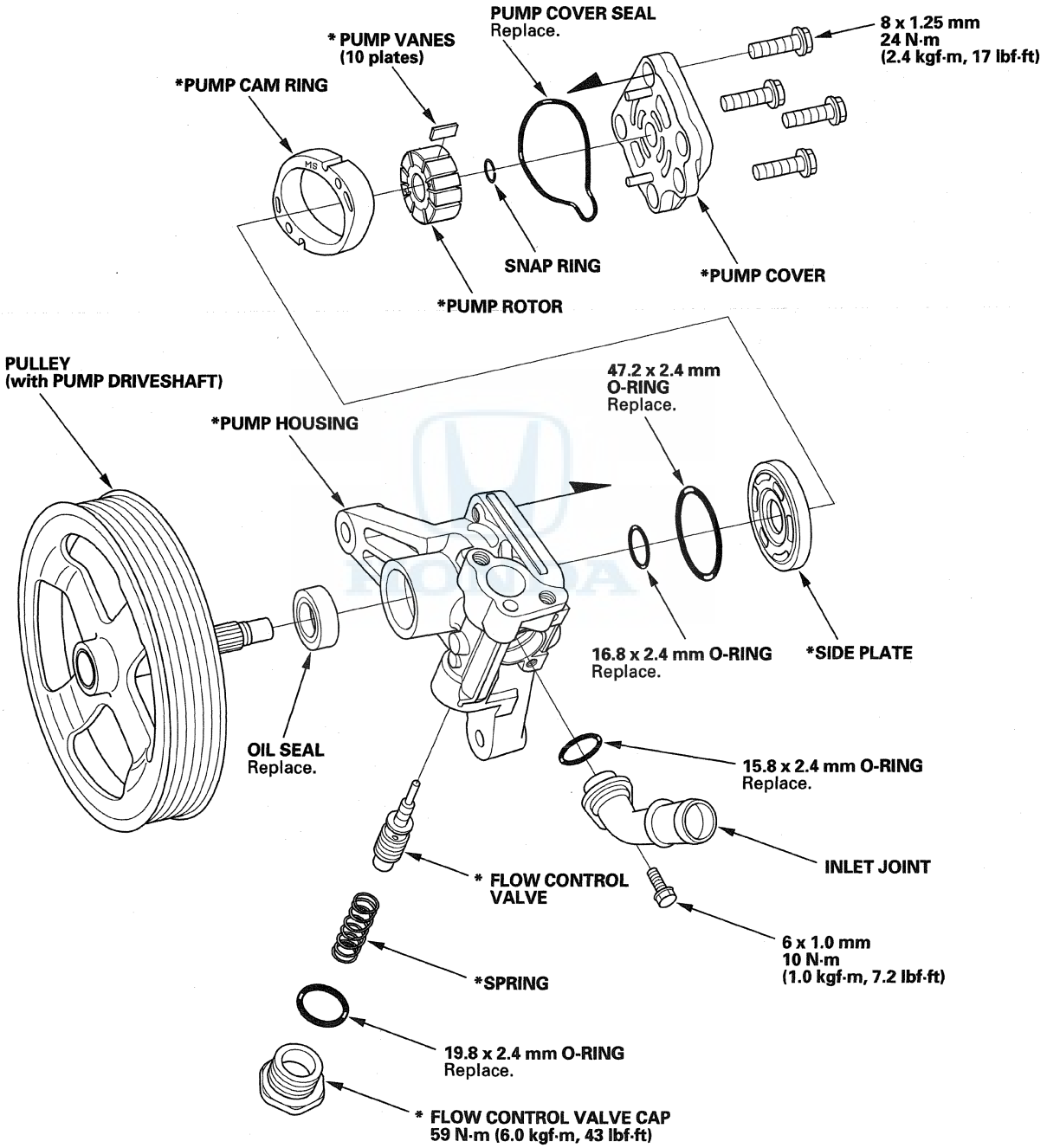

(cont'd)

Pump Overhaul (cont'd)

Disassembly

NOTE: Refer to the Exploded View as needed during the following procedure.

1. Drain the fluid from the pump.
2. Remove the power steering pump (see page 17-15).
3. Remove the inlet joint and the O-ring.
4. Loosen the flow control valve cap with a hex wrench, and remove it and the O-ring, the flow control valve, and the spring.
5. Remove the pump cover and the pump cover seal.
6. Remove the snap ring, then remove the outer side plate, the cam ring, the rotor, the vanes, the side plate, and the O-rings.
7. Remove the snap ring, then remove the pump driveshaft by tapping the shaft end with a plastic hammer.
8. Remove the seal from the pump housing.

Inspection

9. Check the flow control valve for wear, burrs, and other damage to the edges of the grooves in the valve.

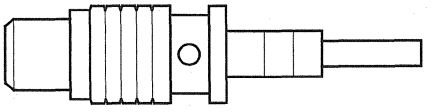

10. Inspect the bore of the flow control valve on the pump housing for scratches and wear.
11. Slip the flow control valve back into the pump housing, and check that it moves in and out smoothly. If OK, go to step 12; if not, replace the pump as an assembly. The flow control valve (A) is not available separately.

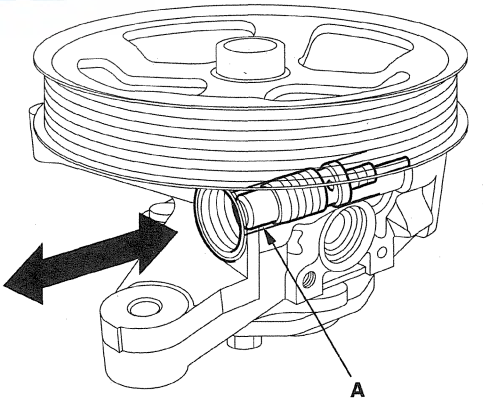

12. Attach a hose (A) to the end of the flow control valve (B) as shown, then submerge the flow control valve in a container of power steering fluid or solvent (C), and blow in the hose.

    - If air bubbles leak through the valve at less than 98 kPa (1.0 kgf/cm², 14.2 psi), replace the pump as an assembly. The flow control valve is not available separately.
    - If the flow control valve is OK, set it aside for reassembly later.

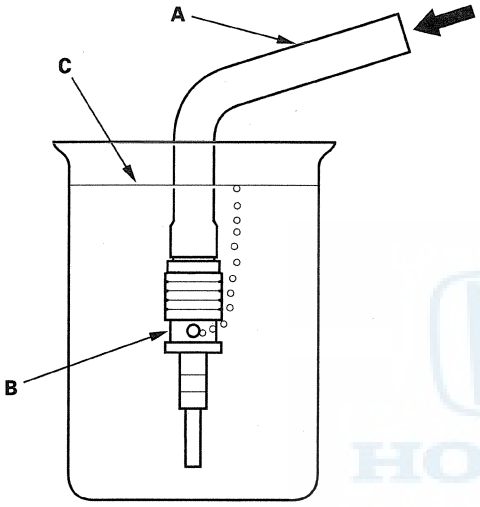

Reassembly

13. Install a new oil seal (A) (with its grooved side facing in) into the pump housing by hand first. Press the oil seal with the appropriate size socket wrench (B) as shown.

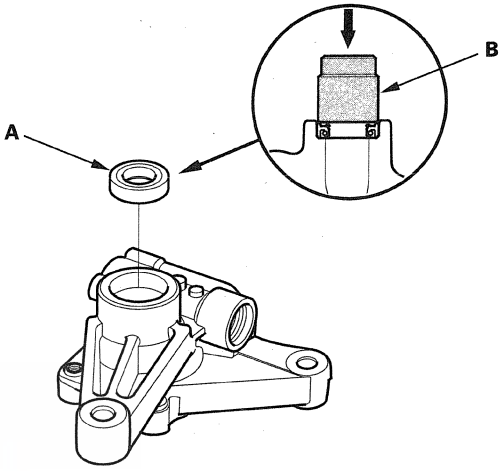

14. Install the pulley (with pump driveshaft) in the pump housing.

15. Coat the new 16.8 mm O-ring (A) with power steering fluid, and position it in the bottom of the pump housing.

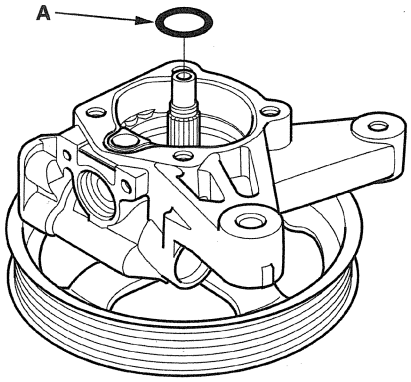

(cont'd)

Pump Overhaul (cont'd)

16. Coat the new 47.2 mm O-ring (A) with power steering fluid, and position it in the bottom of the pump housing.

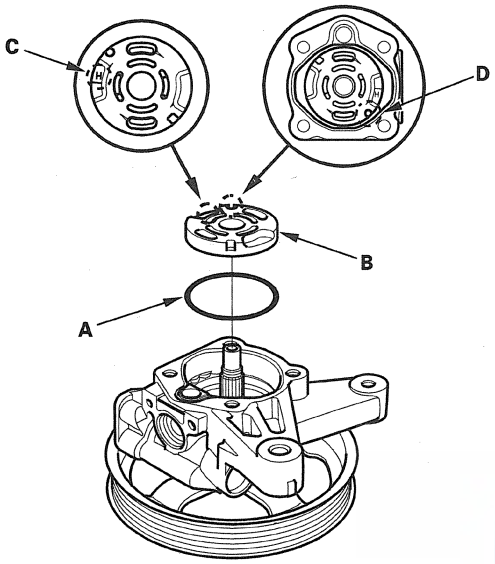

17. Set the plate (B) with its "H" mark (C) facing up, and align the slot (D) in the pump housing.

18. Set the pump cam ring (A) with its "MS" mark (B) facing down, and align the slot (C) in the pump housing.

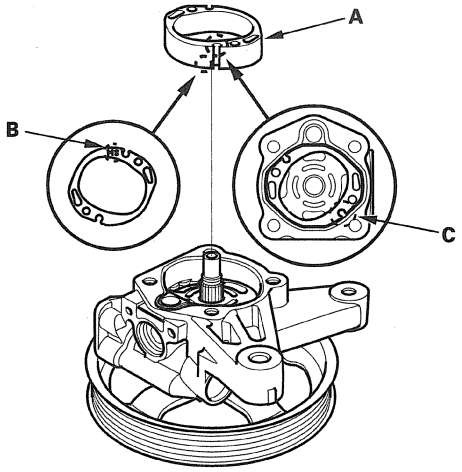

19. Assemble the pump rotor (A) to the pump housing (B) with its "▲" mark (C) facing up.

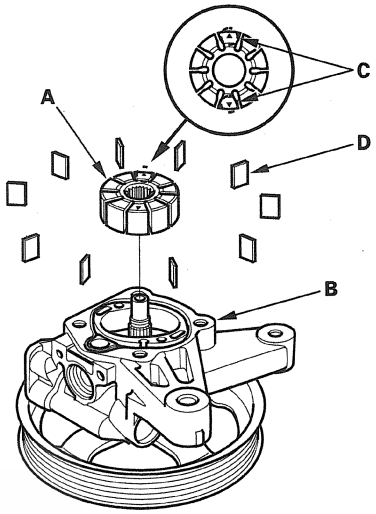

20. Set the 10 vanes (D) in the grooves in the rotor.

21. Install the snap ring (A).

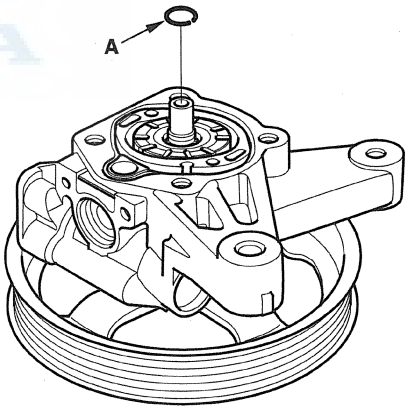

22. Coat the new pump cover seal (A) with power steering fluid, and position it in the pump housing.

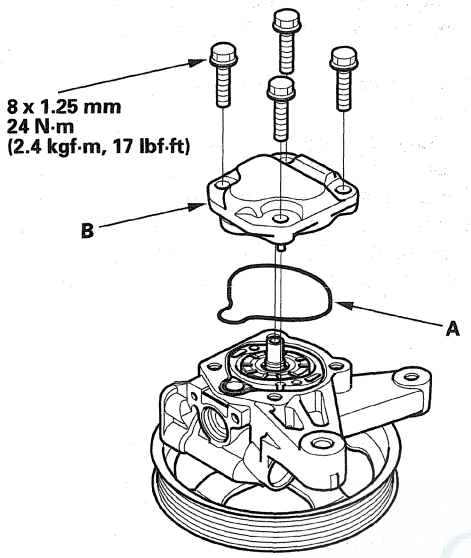

23. Install the pump cover (B) in the pump housing. Torque the bolts in a criss-cross pattern in two or more steps.

24. Coat the flow control valve (A) with power steering fluid, then install it and the spring (B) in the pump housing.

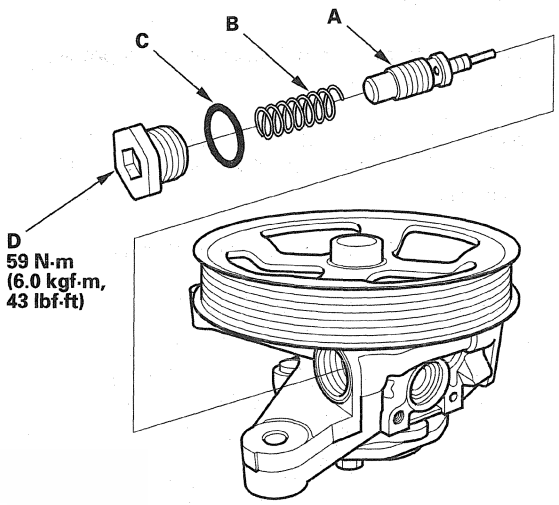

25. Coat the new 19.8 mm O-ring (C) with power steering fluid, and install it on the flow control valve cap (D), then install the cap on the pump housing, and tighten it to the specified torque.

26. Coat the new 15.8 mm O-ring (A) with power steering fluid, and install it on the inlet joint (B). Install the inlet joint on the pump housing.

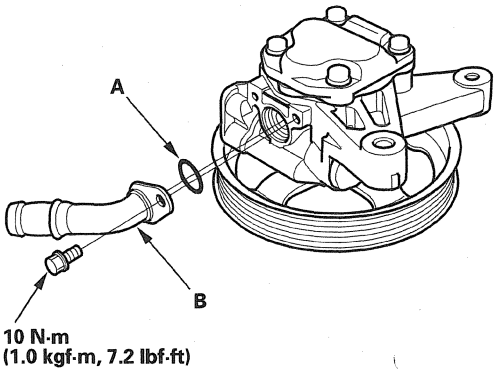

27. Check that the pump turns smoothly by turning the pulley by hand. If it turns hard, loosen the four flange bolts on the cover, then retighten them in the same manner as in step 23. Turn the pump again by hand.

Steering Wheel Removal

SRS components are located in this area. Review the SRS component locations (see page 24-12) and the precautions and procedures (see page 24-14) before doing repairs or service.

1. Do the battery terminal disconnection procedure (see page 22-91).
2. Align the front wheels straight ahead, then remove the driver's airbag from the steering wheel (see page 24-197).
3. Disconnect the cable reel connector (A).
4. Loosen the steering wheel nut (B).

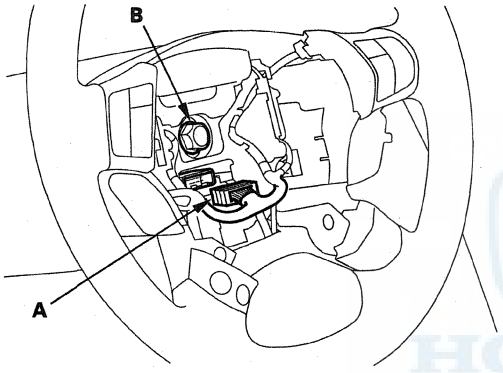

5. Install a commercially available steering wheel puller (A) on the steering wheel (B). Free the steering wheel from the steering column shaft by turning the pressure bolt (C) of the puller.

   Note these items when removing the steering wheel:
   - Do not tap on the steering wheel or the steering column shaft when removing the steering wheel.
   - If you thread the puller bolts (D) into the wheel hub more than five threads, the bolts will hit the cable reel, and damage it. To prevent this, install a pair of jam nuts five threads up on each puller bolt.

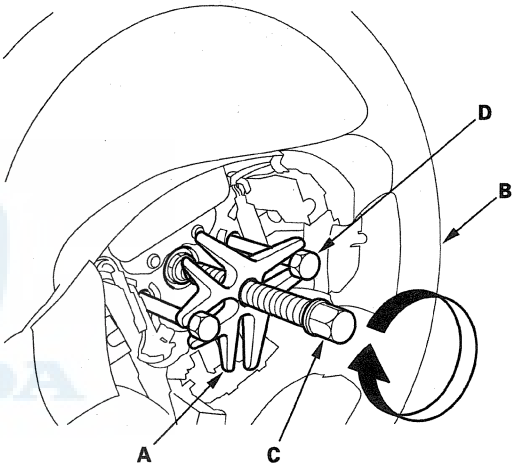

6. Remove the steering wheel puller, then remove the steering wheel nut and the steering wheel from the steering column.

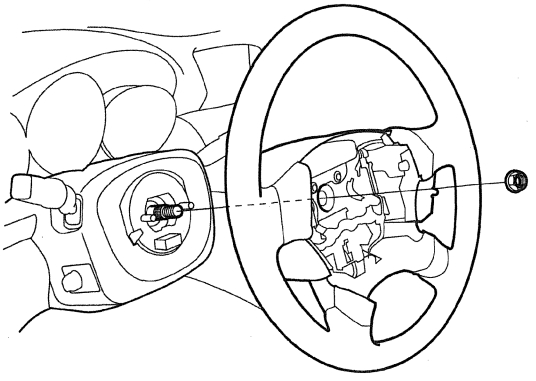

Steering Wheel Disassembly/Reassembly

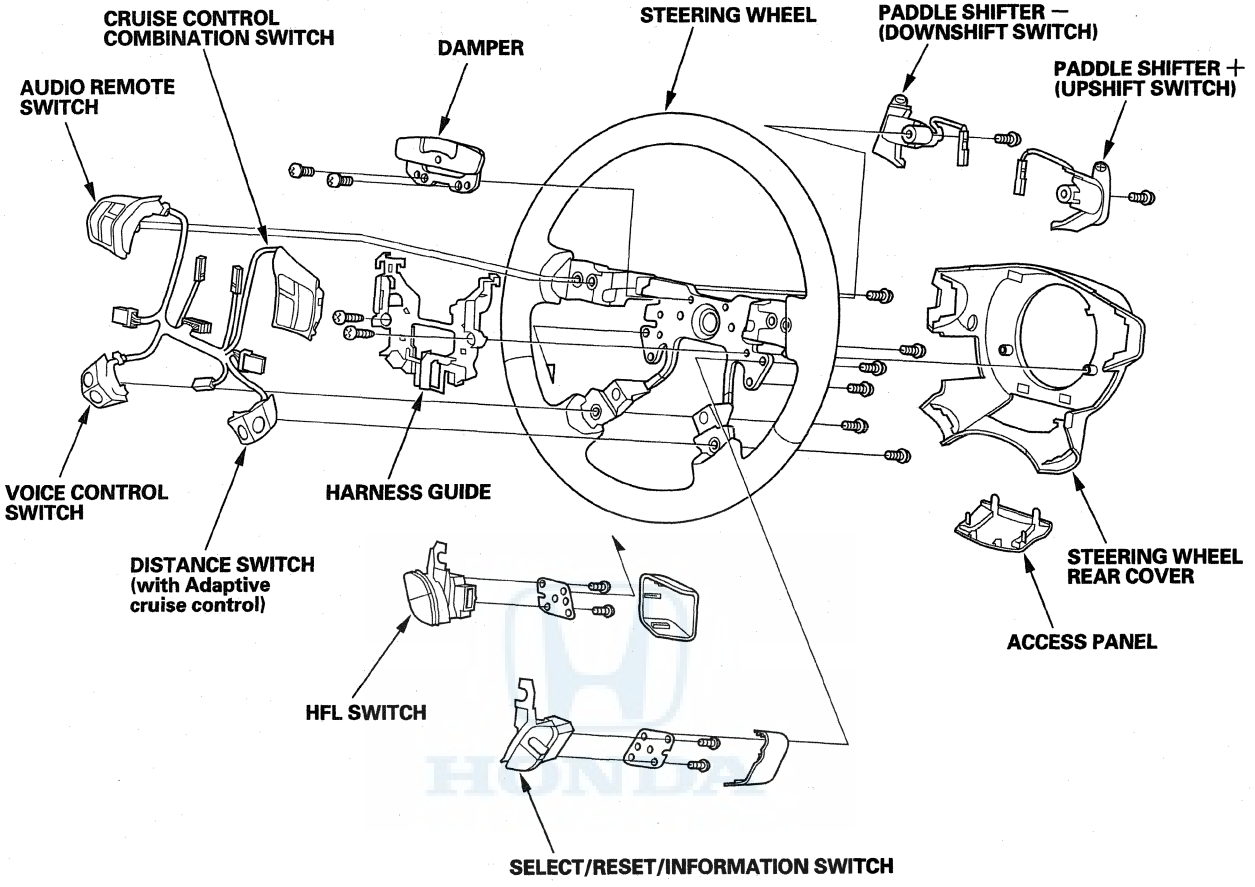

Steering Wheel Installation

SRS components are located in this area. Review the SRS component locations (see page 24-12) and the precautions and procedures (see page 24-14) before doing repairs or service.

1. Before installing the steering wheel, make sure the front wheels are aligned straight ahead, then center the cable reel (A). Do this by first rotating the cable reel clockwise until it stops. Then rotate it counterclockwise about three full turns. The arrow mark (B) on the cable reel label point should point straight up.

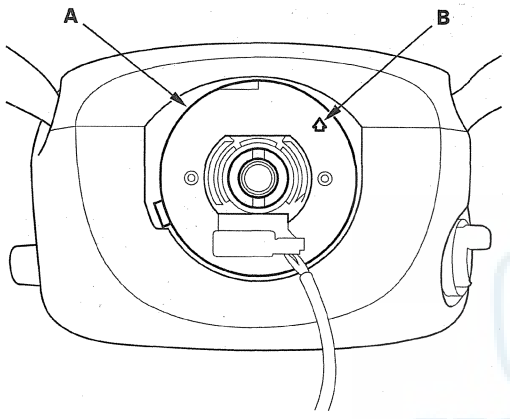

2. Position the two tabs (A) of the turn signal cancelling sleeve (B) as shown. Route the airbag connector through the steering wheel and install the steering wheel on to the steering column shaft, making sure the steering wheel hub (C) engages the pins (D) of the cable reel and the tabs of the turn signal canceling sleeve. Do not tap on the steering wheel or the steering column shaft when installing the steering wheel.

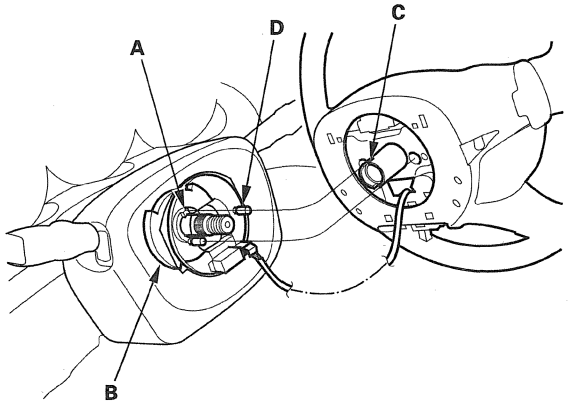

3. Install the steering wheel nut (A), and tighten it to the specified torque. Connect the cable reel connector. Make sure the wire harness is routed and fastened properly.

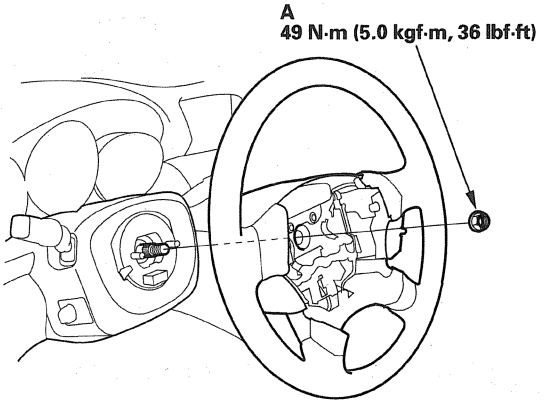

4. Install the driver's airbag (see page 24-197).

5. Do the battery terminal reconnection procedure (see page 22-91), and do these tasks:

   - Turn the ignition switch to ON (II) and check that the SRS indicator comes on for about 6 seconds and then goes off.
   - Make sure the horn and the turn signal switches work properly.
   - Make sure the steering wheel switches work properly.
   - Make sure the steering wheel is centered.
   - Do the steering column position memorization (see page 17-32).

6. After installation, check the steering wheel spoke angle. If the steering spoke angles to the right and left are not equal (steering wheel is not centered), correct the engagement of the wheel/column shaft splines.

Steering Column Removal and Installation

SRS components are located in this area. Review the SRS component locations (see page 24-12) and the precautions and procedures (see page 24-14) before doing repairs or service.

Removal

1. Adjust the steering column to the full tilt down position, and to the full telescopic out position.
2. Do the battery terminal disconnection procedure (see page 22-91).
3. Remove the driver's dashboard lower cover (see page 20-100).
4. Remove the driver's dashboard undercover (see page 20-100).
5. Remove the driver's airbag (see page 24-197) and the steering wheel (see page 17-22).
6. Remove the steering joint cover A.

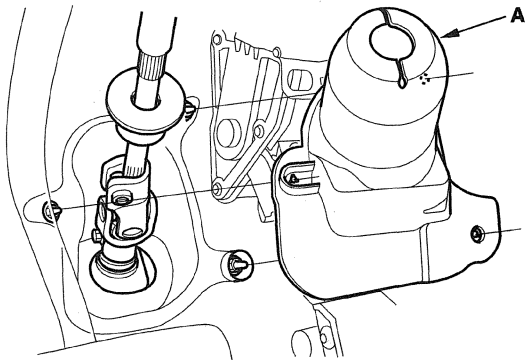

(cont'd)

Steering Column Removal and Installation (cont'd)

7. Remove the upper column cover (A), and disconnect the connectors from the power tilt/telescopic steering switch (B) on the lower column cover (C).

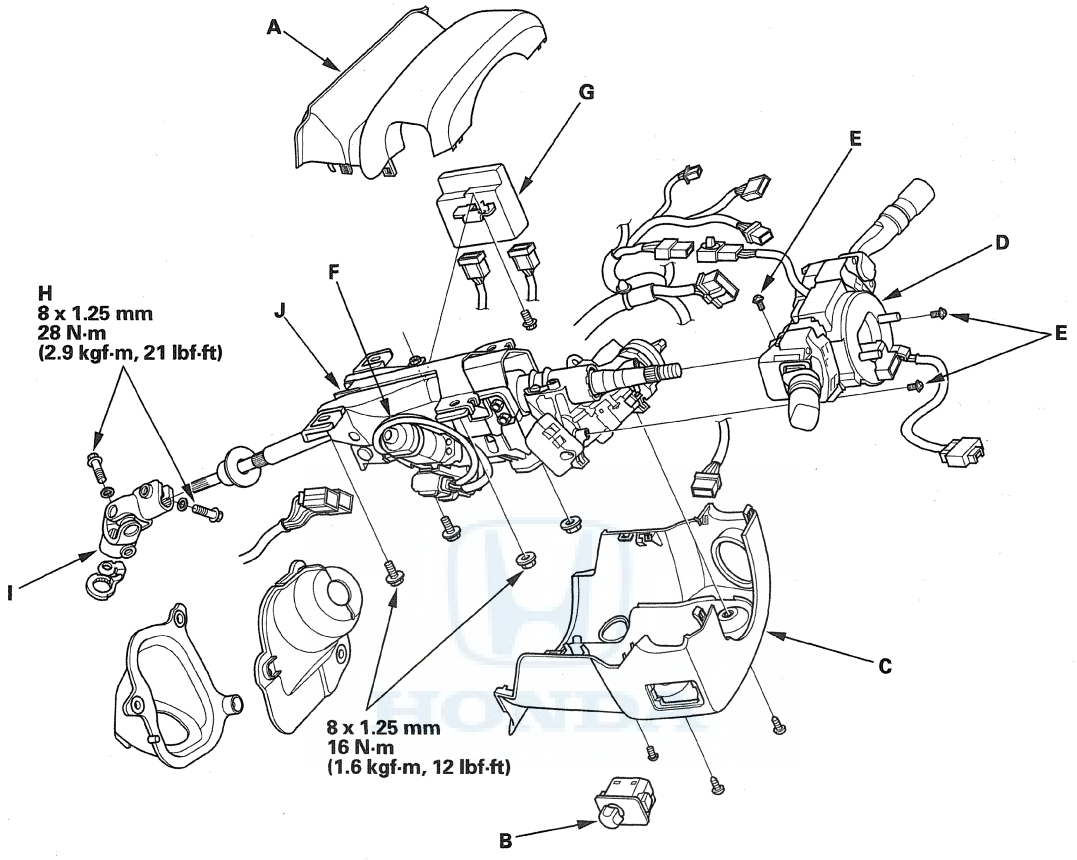

8. Disconnect the wire harness connectors from the combination switch assembly (D).
9. Remove the combination switch assembly from the steering column shaft by removing the screws (E).
10. Disconnect the connector from the ignition switch, and release the wire harness clips from the steering column.
11. Disconnect the connectors from the tilt/telescopic motors (F).
12. Disconnect the connectors from the power tilt/telescopic steering control unit (G).
13. Remove the steering joint bolts (H), then disconnect the steering joint (I) from the pinion shaft and the steering column shaft.
14. Remove the steering column (J) by removing the attaching nuts and bolts, and carefully guide it out of the dashboard.

Installation

1. Install the steering column in the reverse order of removal, and note these items:

   - Make sure the wires are not caught or pinched by any parts.
   - Take care not to let the sliding capsules fall out of position during column installation.

2. Center the steering rack within its stroke.

3. Insert the upper end of the steering joint onto the steering shaft (A) (line up the bolt hole (B) with the flat portion (C) on the shaft), and loosely install the upper steering joint bolt (D).

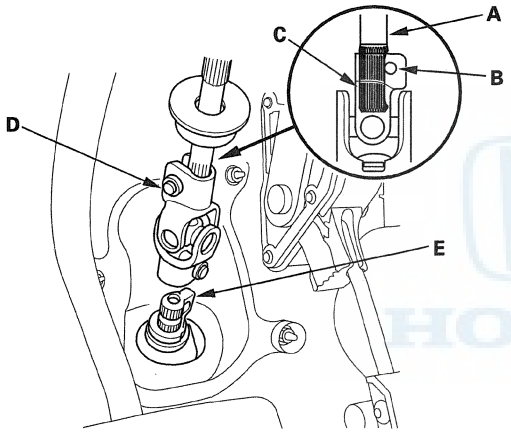

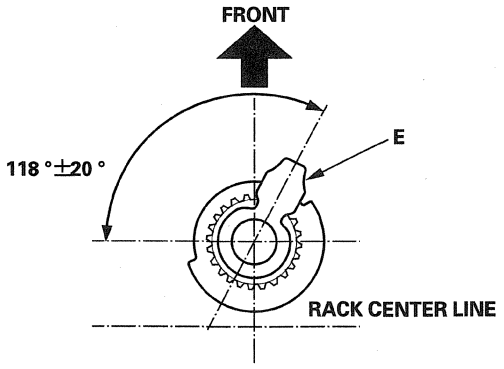

4. Slip the lower end of the steering joint onto the pinion shaft with the tab (E) of the center guide. The center guide angle of the pinion shaft is shown if necessary.

5. Align the bolt hole (A) on the steering joint with the groove (B) around the pinion shaft, and loosely install the lower steering joint bolt (C). Be sure that the joint bolt is securely in the groove in the pinion shaft. Tighten the steering joint bolt to the specified torque.

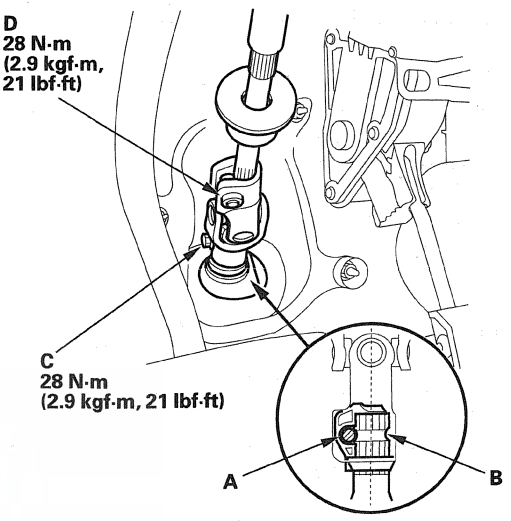

6. Pull the steering joint fully to the steering column shaft side, then tighten the upper steering joint bolt (D) to the specified torque.

7. Install the steering joint cover A.

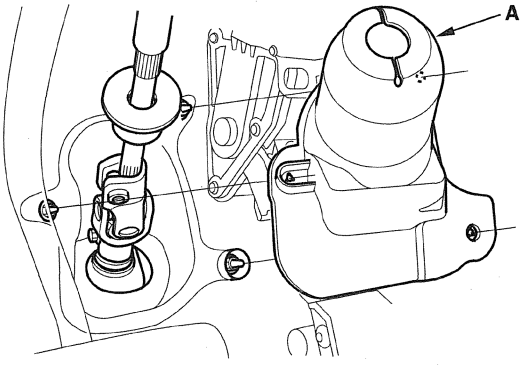

8. Install the steering wheel (see page 17-24) and driver's airbag (see page 24-197).

9. Reconnect all electrical connectors.

(cont'd)

Steering Column Removal and Installation (cont'd)

10. Install the driver's dashboard undercover (see page 20-100).

11. Install the driver's dashboard lower cover (see page 20-100).

12. Do the battery terminal reconnection procedure (see page 22-91), and do these tasks:

    - Turn the ignition switch to ON (II) and check that the SRS indicator comes on for about 6 seconds and then goes off.
    - Make sure the horn and the turn signal switches work properly.
    - Make sure the steering wheel switches work properly.
    - Make sure the steering wheel is centered.

13. After installation, do these checks:

    - Check the steering wheel spoke angle. If the steering spoke angles to the right and left are not equal (steering wheel and rack are not centered), correct the engagement of the joint/pinion shaft serrations.
    - Set the steering column to the center tilt position, then do the front toe inspection (see page 18-6).
    - Do the VSA neutral position memorization procedure (see page 19-101).

Steering Shaft Removal and Installation

SRS components are located in this area. Review the SRS component locations (see page 24-12) and the precautions and procedures (see page 24-14) before doing repairs or service.

Removal

1. Do the battery terminal disconnection procedure (see page 22-91).
2. Remove the driver's dashboard lower cover (see page 20-100).
3. Remove the driver's dashboard undercover (see page 20-100).
4. Remove the driver's airbag (see page 24-197) and the steering wheel (see page 17-22).

   NOTE: Make sure to remove the steering wheel before disconnecting the steering joint, because damage to the cable reel can occur.

5. Remove the steering joint cover A.

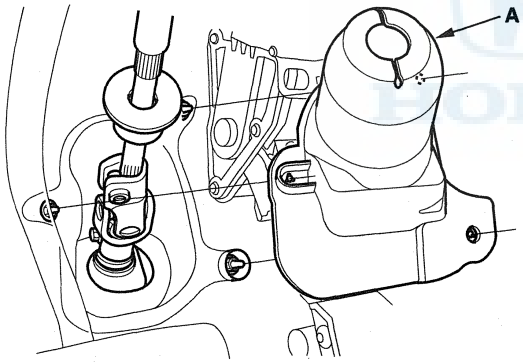

6. Loosen the upper steering joint bolt (A) and remove the lower steering bolt (B), then disconnect the steering joint (C) from the steering pinion shaft (D).

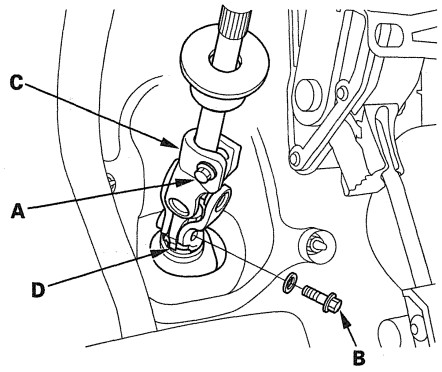

7. Make marks (A) on the steering joint (B) and the steering column shaft (C) to identify the position of the joint on the steering shaft.

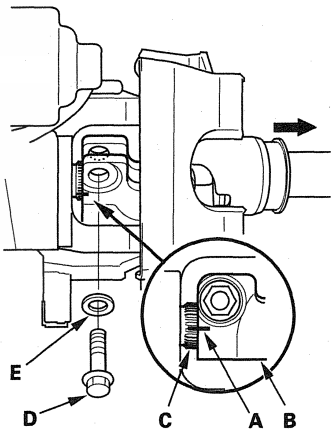

8. Remove the steering joint bolt (D) and washer (E).
9. Disconnect the steering shaft from the steering column shaft.
10. Remove the steering shaft.

(cont'd)

Steering Shaft Removal and Installation (cont'd)

Installation

NOTE: When replacing the steering shaft, make the new shaft like you did the original steering shaft to identify the position of the joint on the original steering shaft.

1. Slide the upper end (A) of the steering shaft down, and align the aligning marks (B) on the steering column shaft (C). Be sure the steering shaft and steering column shaft are aligned with the serrations; the steering shaft should slip on smoothly. If it doesn't reposition the serrations of the steering shaft.

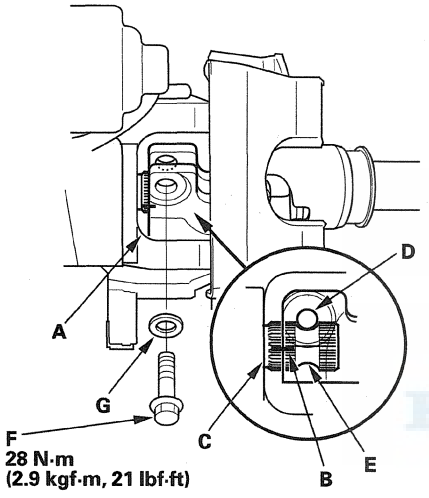

2. Align the bolt hole (D) on the steering joint with the groove (E) around the steering column shaft, and loosely install the joint bolt (F) and washer (G). Be sure that the joint bolt is securely in the groove in the steering column shaft.

3. Center the steering rack within its stroke.

4. Insert the upper end of the steering joint into the steering shaft (A) (line up the bolt hole (B) with the flat portion (C) on the shaft), and loosely install the upper joint bolt (D).

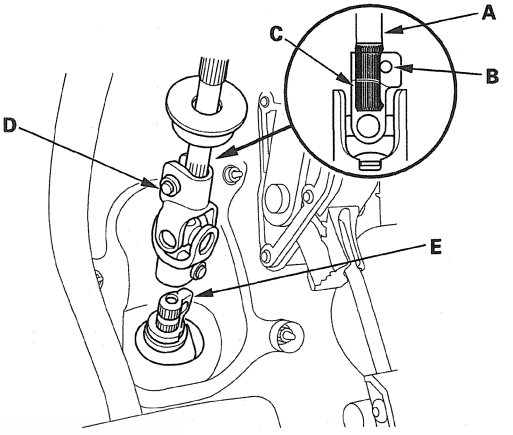

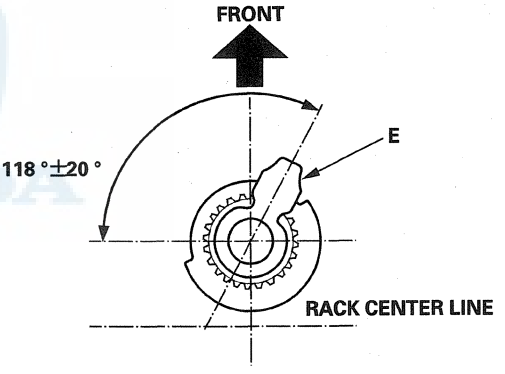

5. Slip the lower end of the steering joint onto the pinion shaft with the tab (E) of the center guide. Position the center guide angle of the pinion shaft as shown if necessary.

6. Align the bolt hole (A) on the steering joint with the groove (B) around the pinion shaft, and loosely install the joint bolt (C). Make sure that the joint bolt is securely in the groove in the pinion shaft. Tighten the steering joint bolt to the specified torque.

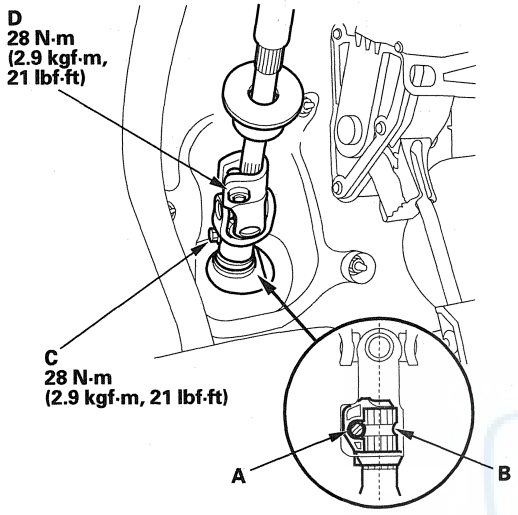

7. Pull the steering joint fully towards the steering column shaft side, then tighten the steering joint bolt (D) to the specified torque.

8. Install the steering joint cover A.

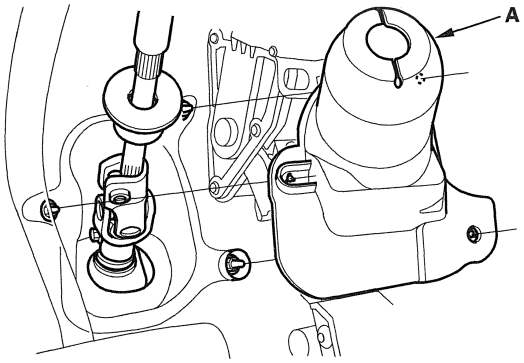

9. Install the driver's airbag (see page 24-197) and the steering wheel (see page 17-24).

10. Install the driver's dashboard undercover (see page 20-100).

11. Install the driver's dashboard lower cover (see page 20-100).

12. Do the battery terminal reconnection procedure (see page 22-91), and do these tasks:

    - Turn the ignition switch to ON (II) and check that the SRS indicator should comes on for about 6 seconds and then goes off.
    - Make sure the horn and the turn signal switches work properly.
    - Make sure the steering wheel switches work properly.

13. After installation, check the steering wheel spoke angle. If the steering spoke angles to the right and left are not equal (steering wheel and rack are not centered), correct the engagement of the joint/ column shaft serrations.

14. Do the VSA sensor neutral position memorization (see page 19-101).

Steering Column Position Memorization

NOTE: If the battery or the power tilt telescopic steering control unit is disconnected, the power tilt and the telescopic steering wheel system needs to be reset when you reconnect the battery.

To reset the system

1. Push the ignition switch for at least 2 seconds and release it, or insert the built-in key into the ignition switch, and remove it.
2. The steering wheel automatically moves fully in and up to let you know the system is reset.

Steering Column Inspection

Inspection

1. Remove the steering column (see page 17-25).
2. Do these checks:
   - Check the steering column ball bearing (A) and the steering joint bearings (B) for play and proper movement. If any bearing is noisy or has excessive play, replace the steering column as an assembly.
   - Check the sliding capsules (C) for distortion or breakage. If there is distortion or breakage, replace the steering column as an assembly.
   - Check the tilt mechanism and the telescopic mechanism for movement and damage.

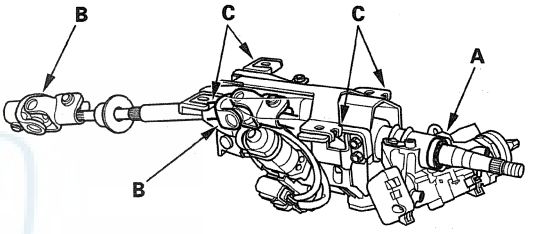

3. Install the steering column (see page 17-27).

Steering Lock Replacement

1. Remove the steering column (see page 17-25).
2. Center-punch each of the two shear bolts, and drill their heads off with a 5 mm (3/16 in) drill bit. Be careful not to damage the switch body and steering column when removing the shear bolts.

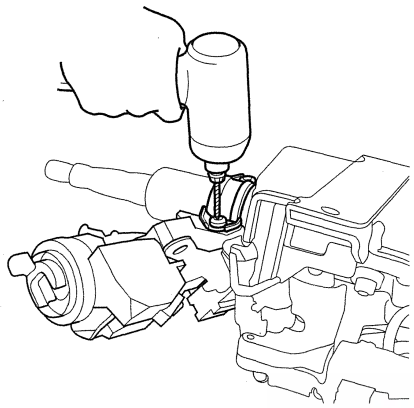

3. Remove the shear bolts from the switch body.
4. Remove the immobilizer-keyless control unit from the switch body, then install it to new switch body (see page 22-509).
5. Install the switch body without the key inserted.
6. Loosely tighten new shear bolts.
7. Insert the ignition key, and check for proper operation of the steering wheel lock and that the ignition key turns freely.
8. Tighten the shear bolts (A) until the hex heads (B) twist off.

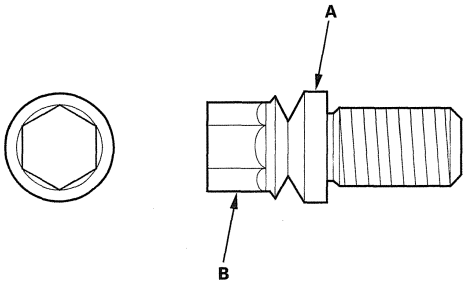

9. Rewrite the new immobilizer control unit-receiver with the HDS, and make sure the immobilizer system works properly (see page 22-7).

Rack Guide Adjustment

Special Tools Required
Locknut wrench, 40 mm 07MAA-SL00100

1. Set the wheels in the straight ahead position.
2. Loosen the rack guide screw locknut (A) with the locknut wrench, then remove the rack guide screw (B).

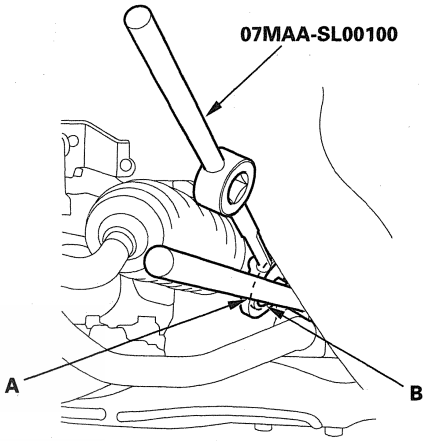

3. Remove the old sealant from the rack guide screw (A), and apply new sealant (Three Bond 1141 or Loctite 5699) to the middle of the threads (B). Loosely install the rack guide screw on the steering gearbox.

NOTE: If 5 minutes has passed after applying the sealant, remove the old sealant and residue, then reapply new sealant.

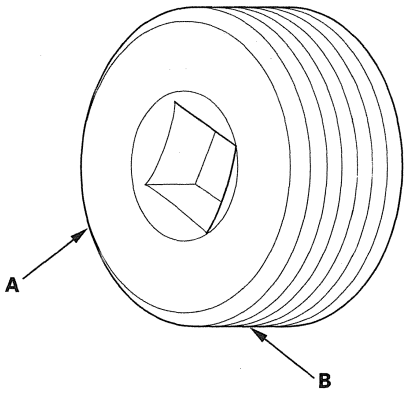

(cont'd)

Rack Guide Adjustment (cont'd)

4. Tighten the rack guide screw (A) to 25 N·m (2.5 kgf·m, 18 lbf·ft), then loosen it.

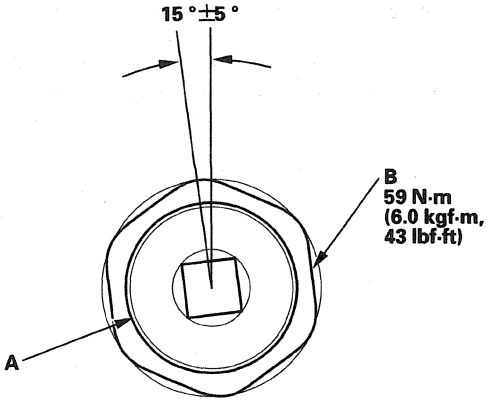

5. Retighten the rack guide screw to 3.9 N·m (0.4 kgf·m, 4 lbf·ft), then back it off to the specified angle.

   Specified return angle: 15 °±5 °

6. Hold the rack guide screw stationary with a wrench, and tighten the locknut by hand until it's fully seated.

7. Install the locknut wrench on the locknut (B), and hold the rack guide screw stationary with a wrench. Tighten the locknut an additional 30 ° with the special tool.

8. Check for unusual steering effort through the complete turning range.

9. Check the steering wheel rotational play (see page 17-8) and the power assist (see page 17-8).

Steering Gearbox Removal

Special Tools Required
Ball joint thread protector, 12 mm 07AAF-SDAA100
Ball joint remover, 32 mm 07MAC-SL0A102

Note these items during removal:
- Using solvent and a brush, wash any oil and dirt off the valve body unit, its lines, and the end of the gearbox. Blow dry with compressed air.
- Make sure to remove the steering wheel before disconnecting the steering joint. Damage to the cable reel can occur.

1. Do the battery terminal disconnection procedure (see page 22-91).

2. Remove the left and right upper fender trim (A) and left upper trim (B) (see page 20-162).

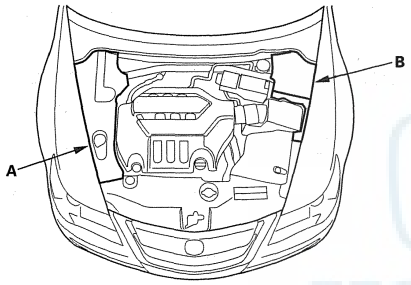

3. Drain the power steering fluid (see step 1 on page 17-13).

4. Remove the relay box (A), then release the wire harness clips.

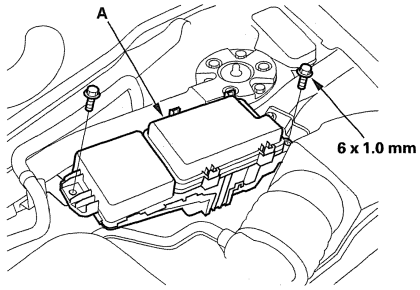

5. Remove the front strut brace (see page 20-189).

6. Raise the front of the vehicle, and support it with safety stands in the proper locations (see page 1-8).

7. Remove the driver's airbag (see page 24-197), and the steering wheel (see page 17-22).

8. Remove the steering joint cover A.

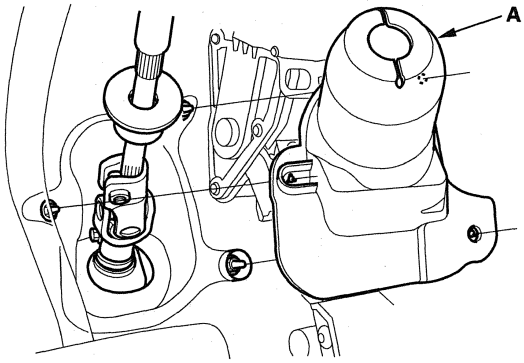

9. Remove the steering joint bolts (A), then disconnect the steering joint (B) from the pinion shaft and the steering column shaft.

NOTE: Do not turn the steering column shaft after disconnecting the steering joint. If the column shaft is turned, do the VSA sensor neutral position memorization with the HDS (see page 19-101) after installing the steering gearbox.

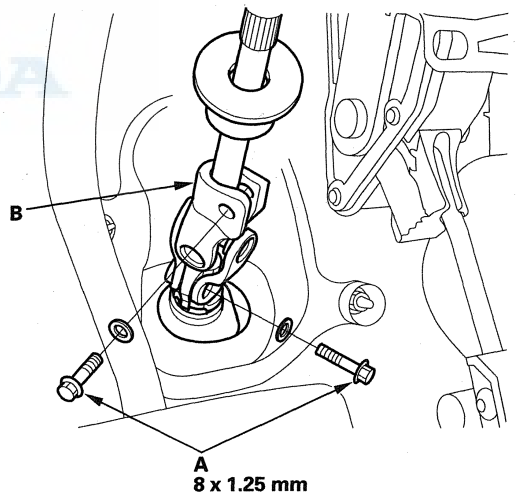

(cont'd)

Steering Gearbox Removal (cont'd)

10. Remove the center guide (A).

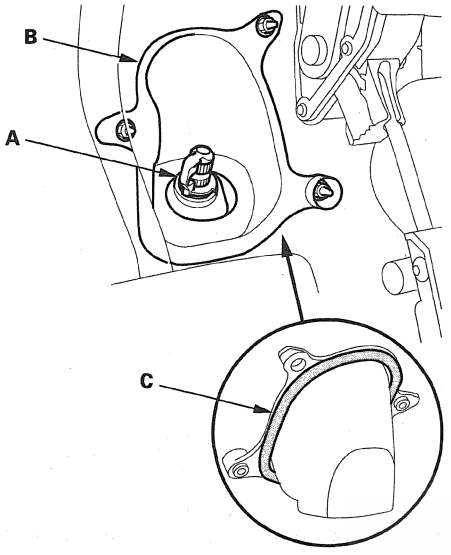

11. Remove steering joint cover B. Be careful not to damage the mating surface on joint cover and the pinion shaft grommet. Replace the cover seal (C) if necessary.

12. Remove the pinion shaft grommet (A) from the top of the valve body unit.

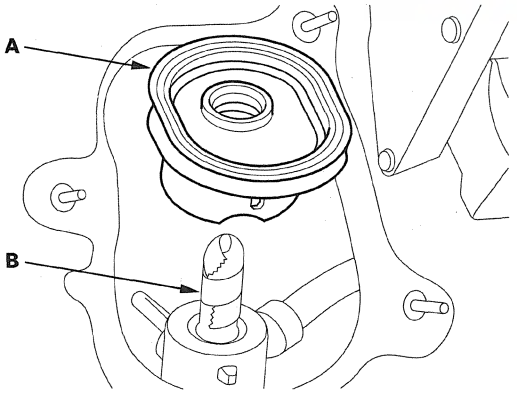

13. Apply vinyl tape (B) to the splines on the pinion shaft.

14. Remove and discard the cotter pin (A) from the tie-rod ball joint nut (B), and loosen the nut.

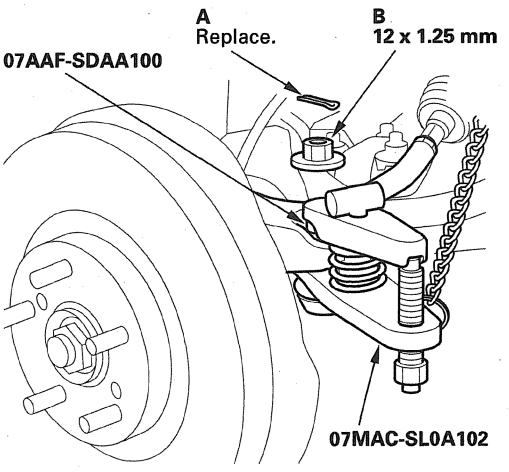

15. Separate the tie-rod ball joint and knuckle using the ball joint thread protector and the ball joint remover (see page 18-10).

16. Remove the nuts (A) from the rear engine mount.

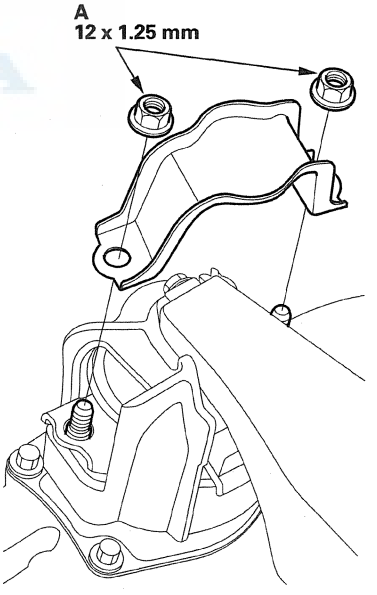

17. Remove the rear engine mount (A) and the engine mount vacuum hose holder mounting bolt (B) on the gearbox stiffener.

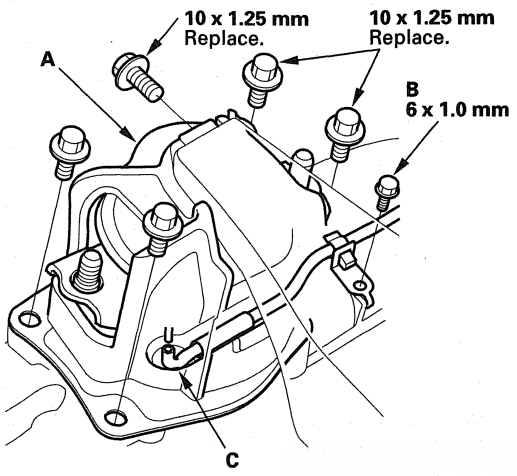

18. Disconnect the engine mount vacuum hose (C) from the rear engine mount.

19. Remove the feed line holder mounting bolt (A) and A/T shift cable holder mounting bolt (B) on the gearbox stiffener.

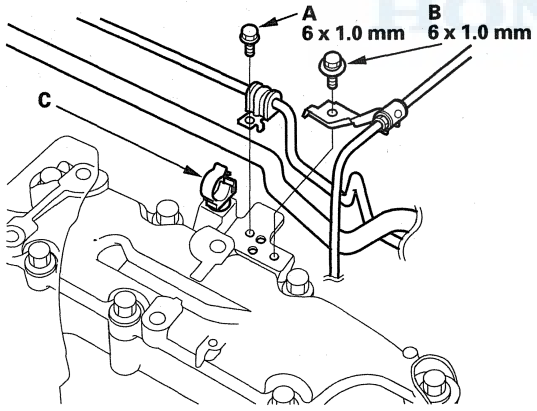

20. Disconnect the return hose from the clamp (C).

21. Remove the feed line holder mounting bolt (A) and return line holder mounting bolt (B) on the gearbox.

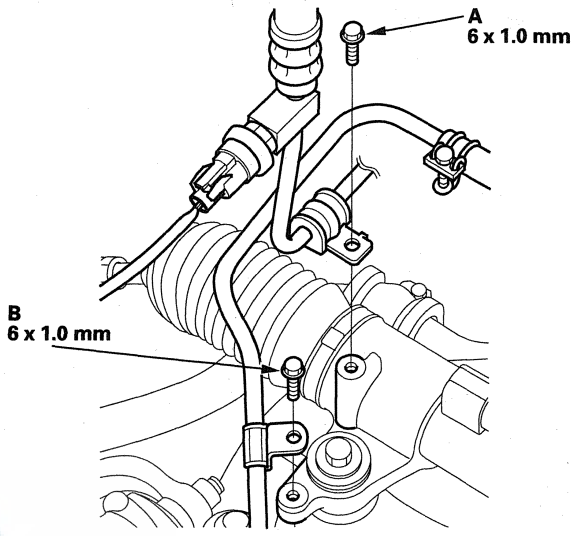

22. Disconnect the ECPS valve motor connector (A).

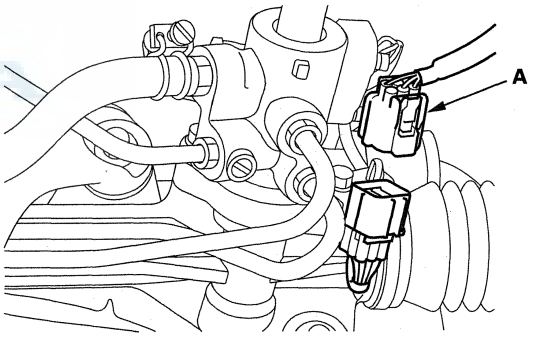

(cont'd)

Steering Gearbox Removal (cont'd)

23. Place several shop towels under the line connections, and cover the gearbox mounting cushion to protect it from the power steering fluid. Loosen the adjustable hose clamp (A), and disconnect the return hose (B).

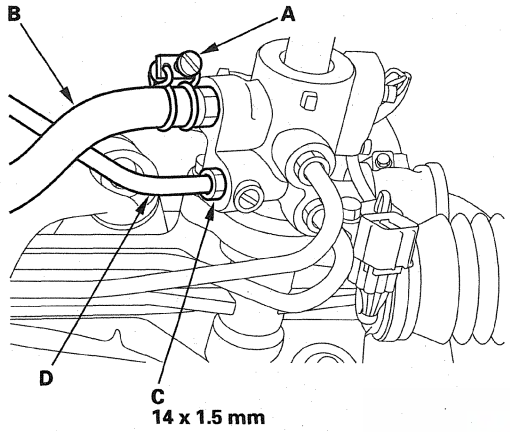

24. Loosen the 14 mm flare nut (C), and disconnect the feed line (D).

25. Remove the return line joint (A) from the steering gearbox.

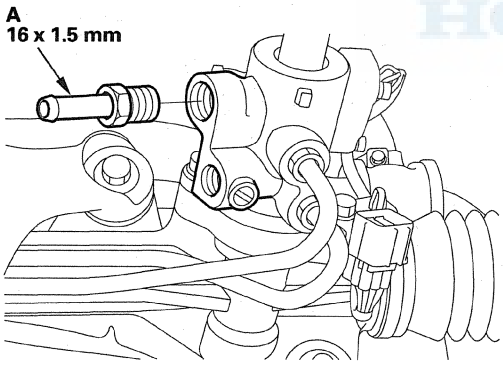

26. Remove the P/S heat shield (A).

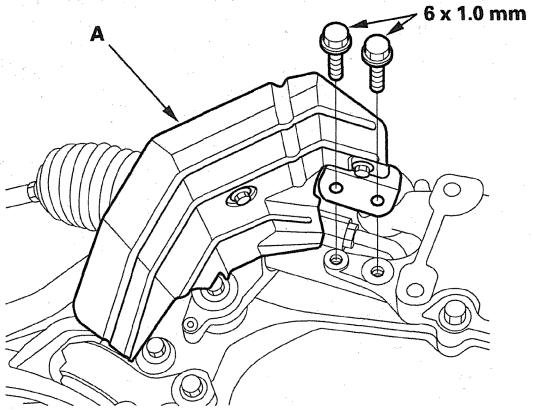

27. Remove the gearbox stiffener (A) the dynamic damper (B) between the gearbox stiffener and the front suspension subframe.

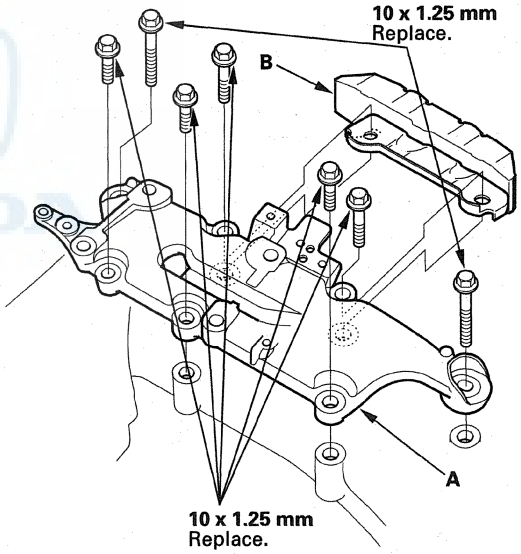

28. Remove the steering gearbox mounting bolt (A) and washer (B) on the right gearbox mount.

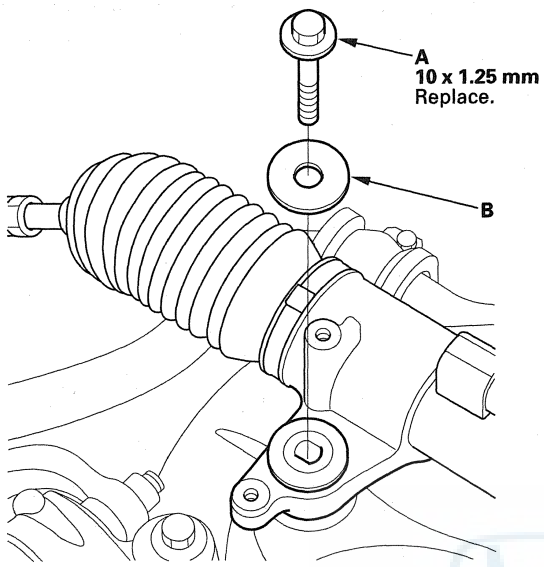

29. Remove the steering gearbox mounting bolt (A) and washer (B) on the left gearbox mount.

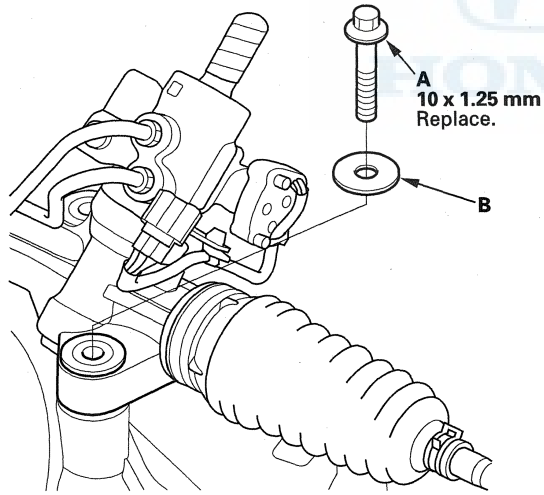

30. Remove the 4-way brake line joint bolts (A). Do not disconnect the lines. Then disconnect the brake pressure sensor connectors (B) (with ACC).

With ACC:

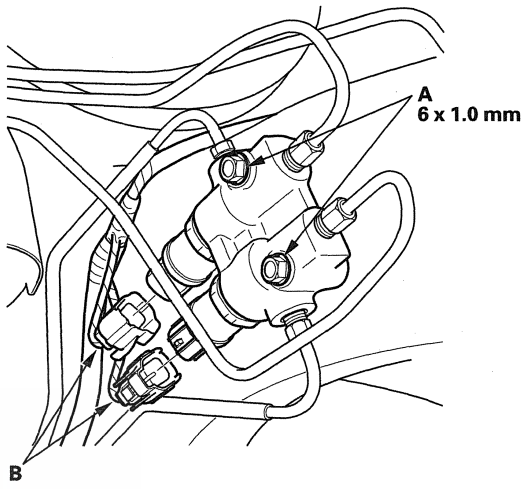

Without ACC:

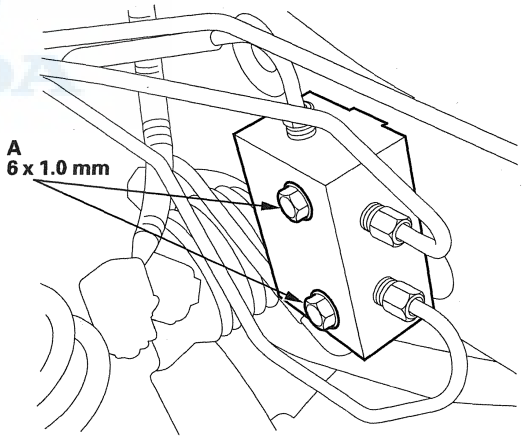

(cont'd)

Steering Gearbox Removal (cont'd)

31. Move the steering gearbox to the passenger's side, and rotate it so the pinion shaft points toward the front of the vehicle.

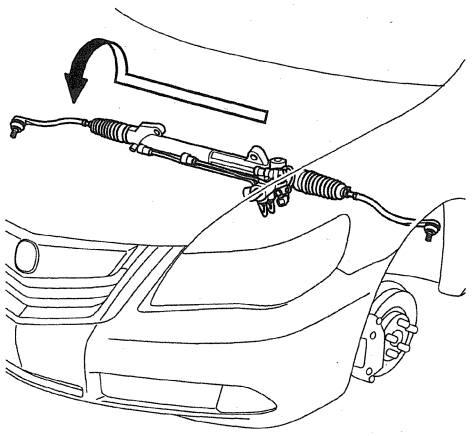

32. Carefully move the steering gearbox as an assembly toward the left side of the vehicle until the pinion shaft clears the wheelwell opening. Be careful not to damage the brake lines with the pinion shaft.

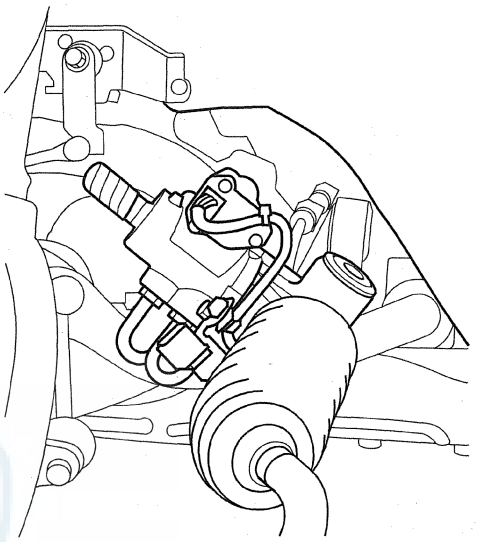

33. Lift the passenger's side of the gearbox, and remove the steering gearbox through the wheelwell opening on the driver's side as shown by the arrow.

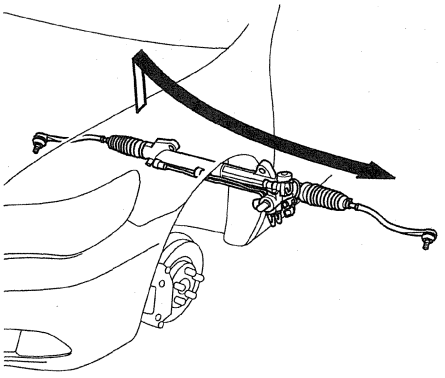

34. After removing the steering gearbox, make sure that no power steering fluid gets on the gearbox mount cushions, the gearbox housing, the surface of the front suspension the subframe, and the stiffener. Wipe off any spilled fluid at once.

Steering Gearbox Overhaul

Exploded View

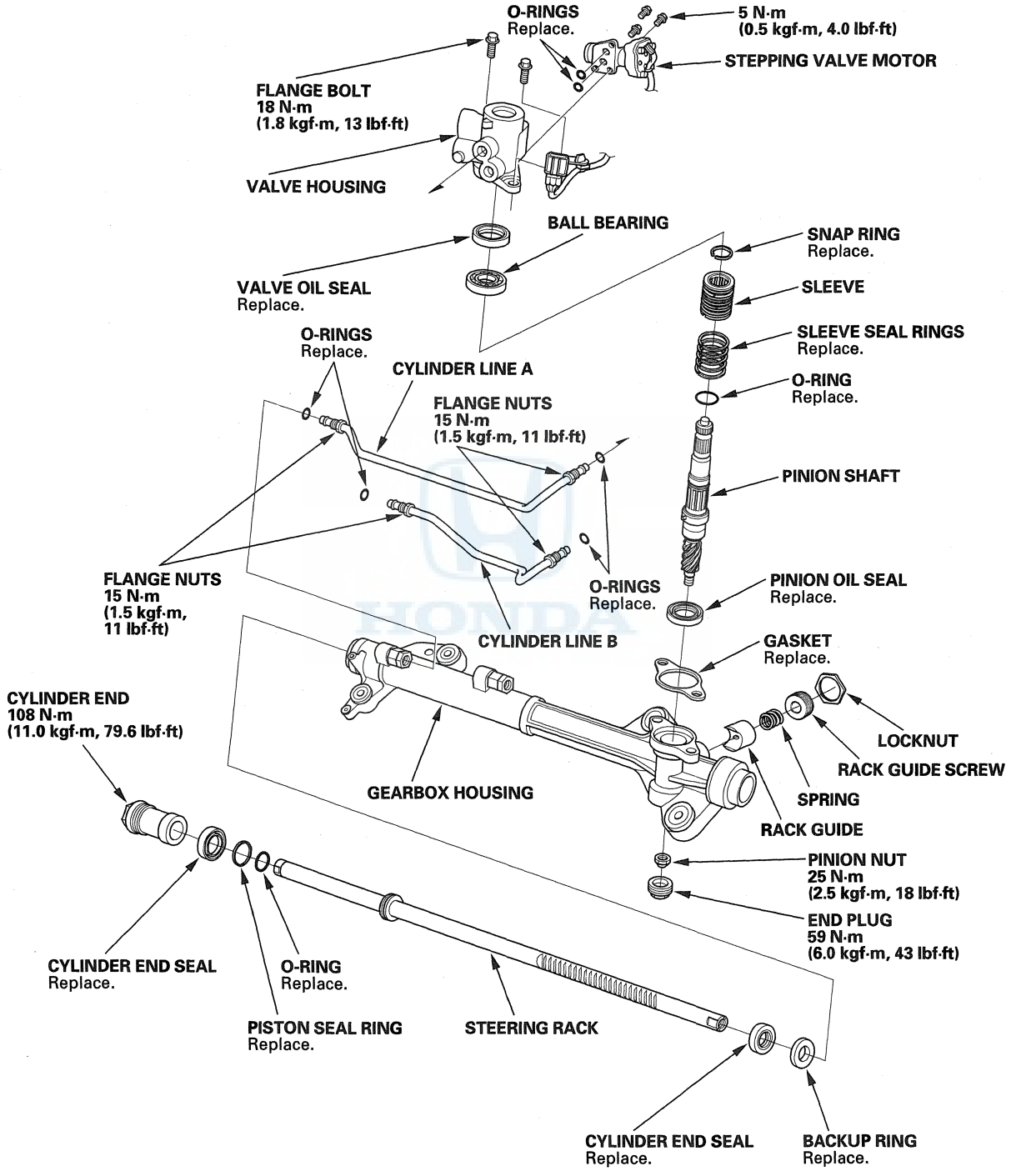

(cont'd)

Steering Gearbox Overhaul (cont'd)

Special Tools Required
- Cylinder end seal remover attachment 07NAD-SR3020A
- Valve seal ring sizing tool 07NAG-SR3090A
- Ball joint boot clip guide 07974-SA50800
- Sleeve seal ring sizing tool 07974-SA5020A or 07974-SA50200
- Attachment, 32 x 35 mm 07746-0010100
- Attachment, 24 x 26 mm 07746-0010700
- Driver 07749-0010000
- Piston seal ring guide 07HAG-SF10100 or 07HAG-SF1010A
- Piston seal ring sizing tool 07HAG-SF1020A or 07HAG-SF10200
- Cylinder end seal slider 07ZAG-S5A0300
- Pincers Oetiker 1098 or equivalent, commercially available

NOTE: Refer to the Exploded View as needed during this procedure.

Removal

1. Remove the steering gearbox (see page 17-35).

Disassembly

2. Remove the boot bands (A) and tie-rod clips (B). Pull the boot away from the ends of the steering gearbox.

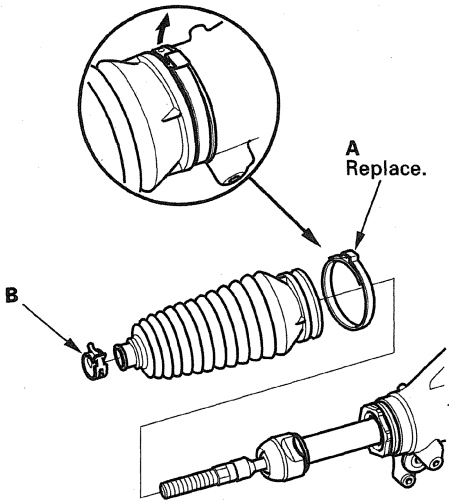

3. Unbend the lock washers (A).

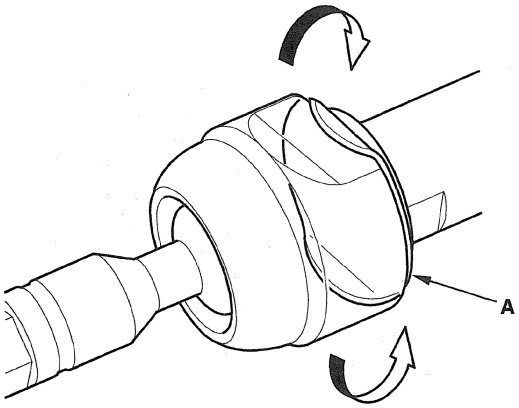

4. Hold the flat surface sections (A) of the steering rack with a wrench (B), and unscrew both rack ends (C) with another wrench (D). Be careful not to damage the rack surface with the wrench.

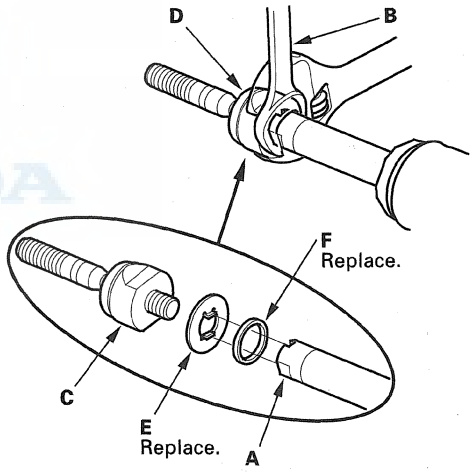

5. Remove the lock washer (E) and rubber stop (F).

6. Loosen the locknut (A), then remove the rack guide screw (B).

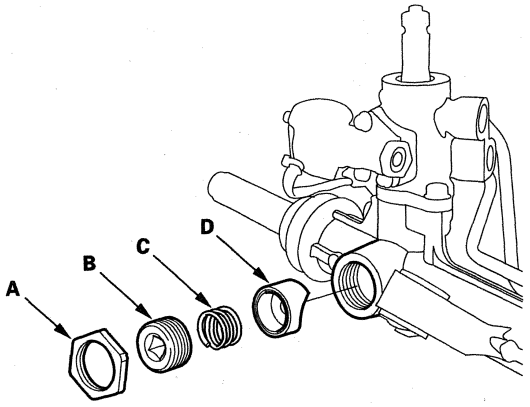

7. Remove the spring (C) and the rack guide (D) from the gearbox housing.

8. Remove the cylinder lines from the gearbox.

   NOTE: Use a second wrench when loosening the cylinder lines to avoid damaging to the fittings on the steering gearbox. Do not loosen the A and B connectors.

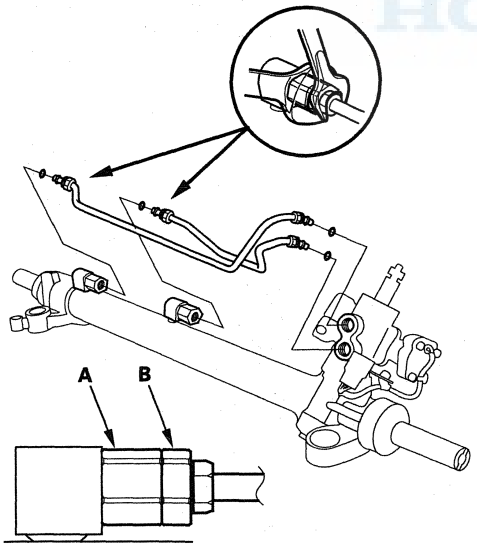

9. Drain the fluid from the cylinder fittings by slowly moving the steering rack back and forth.

10. Remove the stepping valve motor (A), then remove the connector holder mounting bolt (B) on the valve housing.

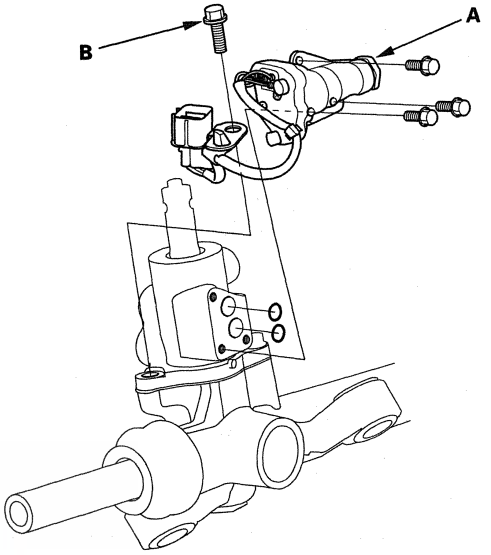

(cont'd)

Steering Gearbox Overhaul (cont'd)

11. Remove the end plug (A) from the gearbox housing, then remove a pinion nut (B) from the pinion shaft end.

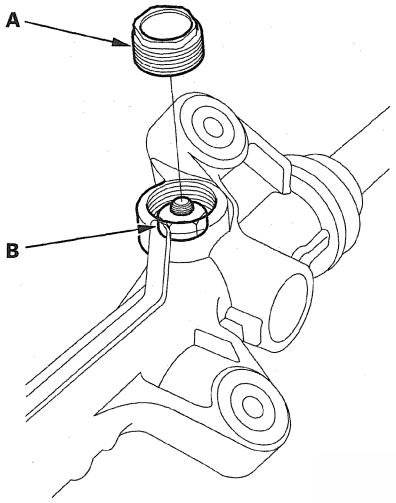

12. Remove the flange bolt, the valve body unit (A), and the gasket (B) from the gearbox. Check that the valve turns smoothly by turning the pinion shaft. If any play or roughness is felt, replace the valve body unit with a new part if necessary. Do not try to disassemble the valve body unit.

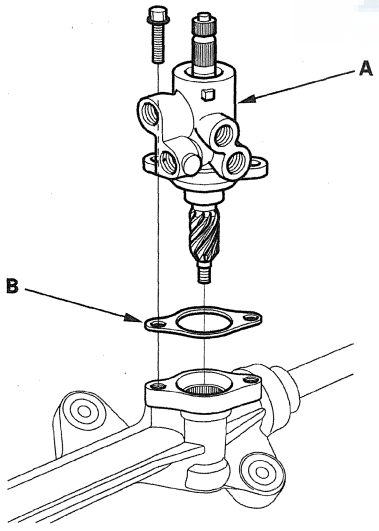

13. Slide the steering rack all the way to the left.

14. Drill a 3 mm (0.12 in) diameter hole about 2.5—3.0 mm (0.10—0.12 in) in depth in the staked point (A) on the cylinder. Do not allow metal shavings to enter the cylinder housing. After removing the cylinder end (B), remove any burrs at the staked point.

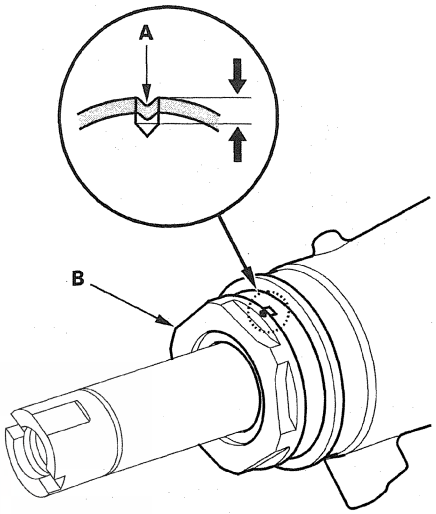

15. Hold the gearbox housing using a C-clamp (commercially available) (A) and wooden blocks (B) as shown. Do not clamp the cylinder part of the gearbox housing in the vise. Then remove the cylinder end (C).

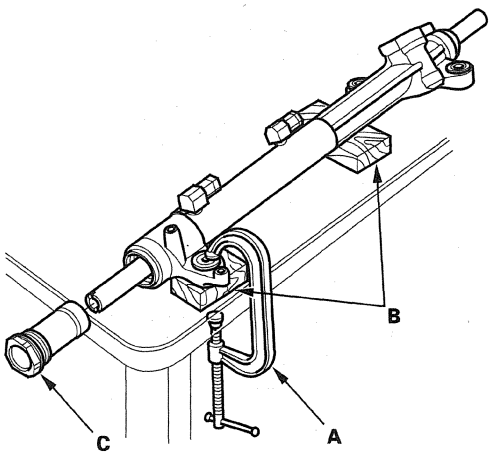

16. Install a commercially available bearing separator (A) in the gearbox housing as shown.

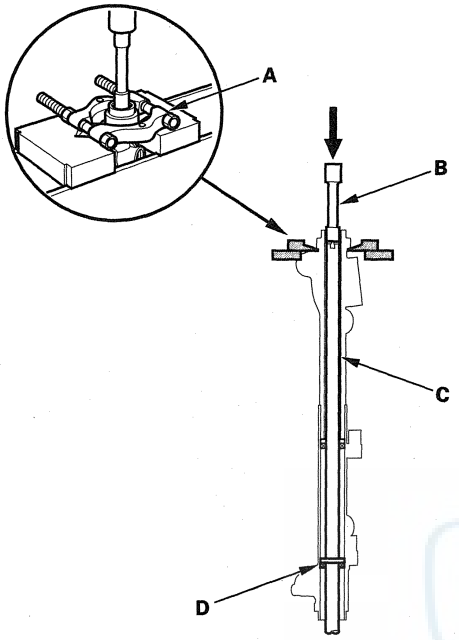

17. Place an appropriate size extension (B) on the steering rack (C).

18. Set the steering gearbox in a press so the gearbox housing side points upward, then press the cylinder end seal (D) and steering rack out of the gearbox. Hold the steering rack to keep it from falling when pressed clear. Be careful not to damage the inner surface of the cylinder housing with the tool.

19. Install the cylinder end seal remover attachment (A) so it will fit through the rack guide hole of the gearbox housing. Insert a 24" long, 3/8" drive extension (B), and install it on the cylinder end seal remover attachment. Make sure the cylinder end seal remover attachment is securely positioned on the backup ring edges. Be careful not to damage the inner surface of the cylinder with the cylinder end seal remover attachment.

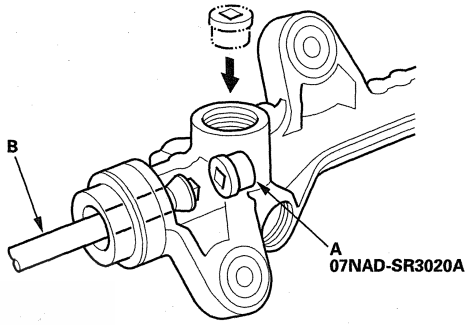

20. Place the steering gearbox in a press, then remove the cylinder end seal (A) and backup ring (B) from the gearbox by pressing on the 24" long, 3/8" drive extension.

Note these items when pressing the cylinder end seal:

- Keep the tool straight to avoid damaging the cylinder wall. Check the tool angle, and correct it if necessary, when removing the cylinder end seal.
- Use a press to remove the cylinder end seal. Do not try to remove the seal by striking the tool; striking the tool could break the backup ring, and the cylinder end seal would remain in the gearbox.

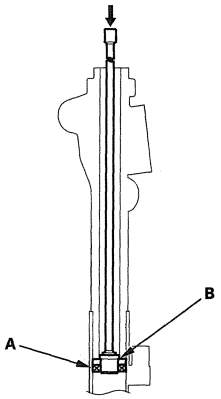

(cont'd)

Steering Gearbox Overhaul (cont'd)

21. Carefully pry the piston seal ring (A) and the O-ring (B) off the rack piston. Be careful not to damage the inside of the seal ring groove and piston edges when removing the seal ring.

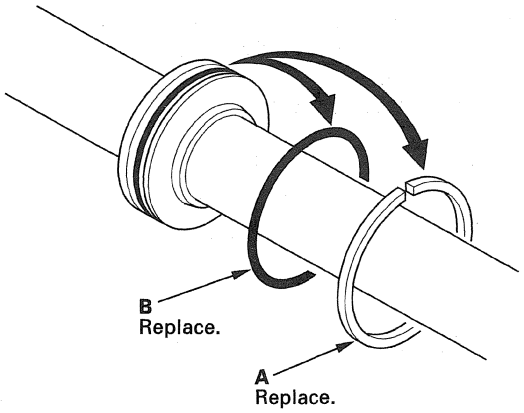

22. Before removing the valve housing (A), apply vinyl tape (B) to the splines on the pinion shaft.

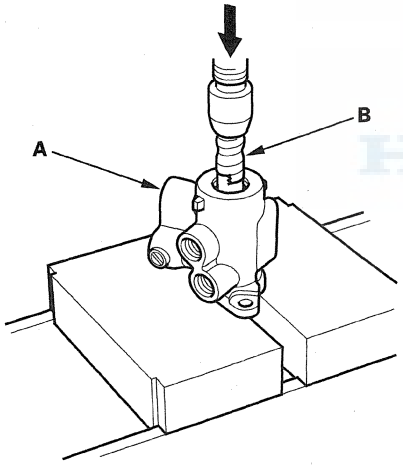

23. Separate the valve housing (A) from the pinion shaft/valve (B) using a press, then remove the pinion oil seal (C).

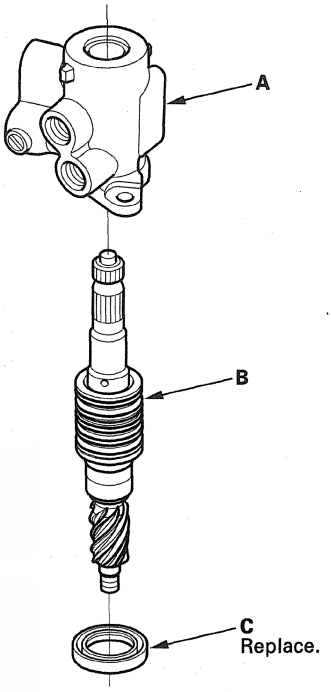

24. With your finger, check the inner wall of the valve housing where the seal ring slides. If there is a step in the wall, the housing is worn. Replace it.

    NOTE: There may be sliding marks from the seal ring on the wall of the valve housing. Replace the valve housing only if the wall is stepped.

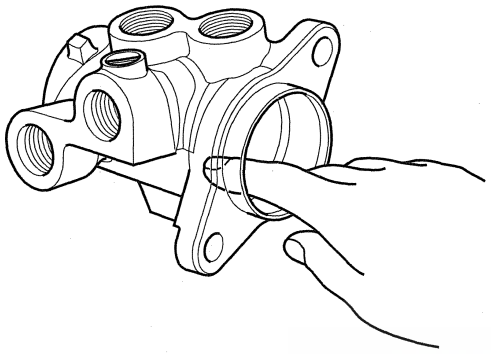

25. Check for wear, burrs, and other damage to the edges of the grooves in the sleeve.

    NOTE: The pinion shaft and sleeve are a precision matched set. If either the pinion shaft or sleeve must be replaced, replace both parts as a set.

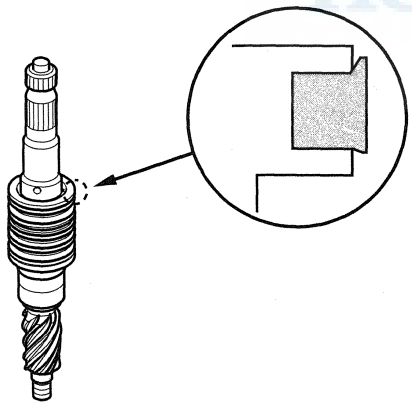

26. Remove the snap ring (A) and the sleeve (B) from the pinion shaft.

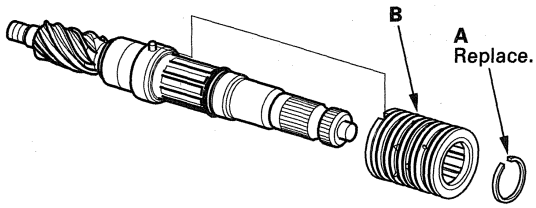

27. Using a cutter or an equivalent tool, cut and remove the four seal rings from the sleeve. Be careful not to damage the edges of the sleeve grooves and outer surface when removing the seal rings.

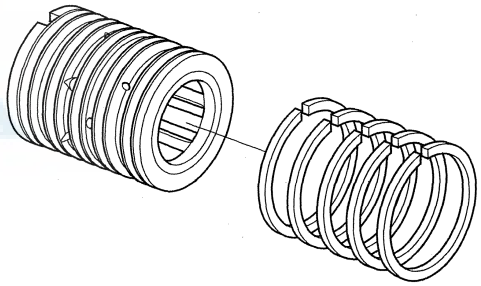

(cont'd)

Steering Gearbox Overhaul (cont'd)

28. Remove the O-ring (A). Be careful not to damage the edges of the pinion shaft groove and the outer surface when removing the O-ring.

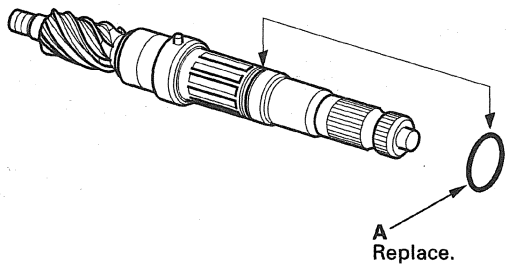

29. Press the valve oil seal (A) and the ball bearing (B) out of the valve housing using a hydraulic press, driver and attachment, 24 x 26 mm.

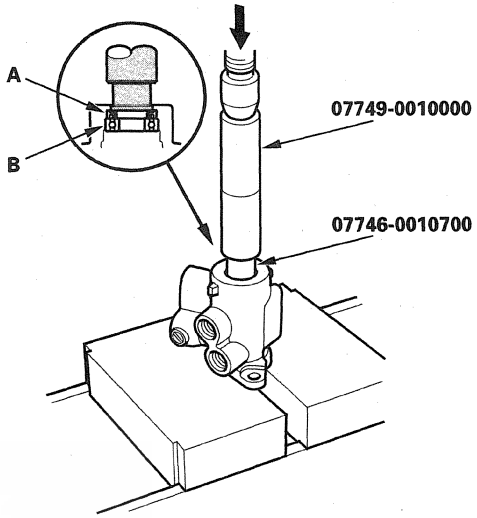

30. Clean the disassembled parts with solvent, and dry them with compressed air. Do not dip rubber parts in the solvent.

Reassembly

31. Apply power steering fluid to the surface of the ball joint boot clip guide. Slip two new seal rings (A) over the ball joint boot clip guide from the smaller diameter end, and expand them. Install only two rings at a time from each end of the pinion shaft sleeve (B).

    Note these items when installing the seal ring:
    - Do not over-expand the seal ring. Install the resin seal rings with care so as not to damage them. After installation, make sure you contract the seal rings using the sleeve seal ring sizing tool.
    - There are two types of sleeve seal rings; black and brown. Do not mix the different types of rings as they are not compatible.

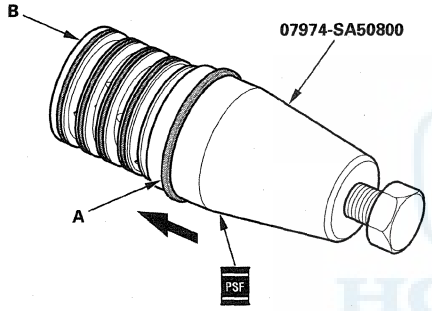

32. Align the ball joint boot clip guide with each groove in the sleeve, and slide a sleeve seal ring into each groove. After installation, compress the seal rings with your fingers temporarily.

33. Apply power steering fluid to the seal rings on the sleeve, and to the entire inside surface of the sleeve seal ring sizing tool, then slowly insert the sleeve into the sleeve seal ring sizing tool.

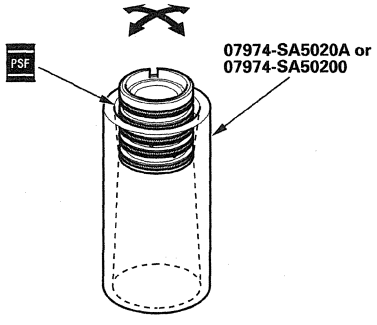

34. Move the sleeve back and forth several times to make the seal rings snugly fit in the sleeve. Make sure the seal rings are not twisted.

35. Apply power steering fluid to the surface of the pinion shaft (A). Slide the sleeve (B) onto the pinion shaft by aligning the locating pin (C) on the inside of the sleeve with the cutout (D) in the shaft. Then install the new snap ring (E) securely in the pinion shaft groove. Be careful not to damage the valve seal ring when inserting the sleeve.

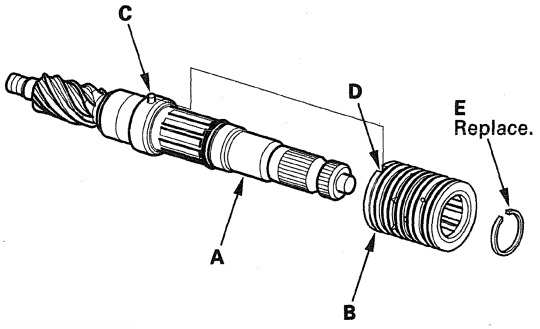

36. Apply power steering fluid to the seal ring lip of the new valve oil seal (A), then install the seal in the valve housing (B) using a hydraulic press, driver and attachment, 32 x 35 mm. Install the seal with its grooved side facing the tool.

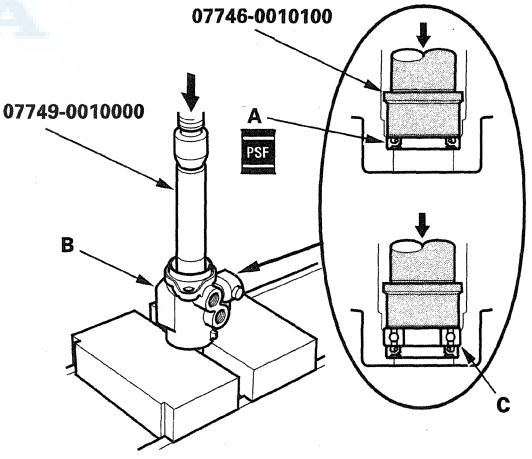

37. Press the ball bearing (C) into the valve housing with a hydraulic press and special tools.

(cont'd)

Steering Gearbox Overhaul (cont'd)

38. Apply vinyl tape (A) to the pinion shaft, then coat the vinyl tape with power steering fluid.

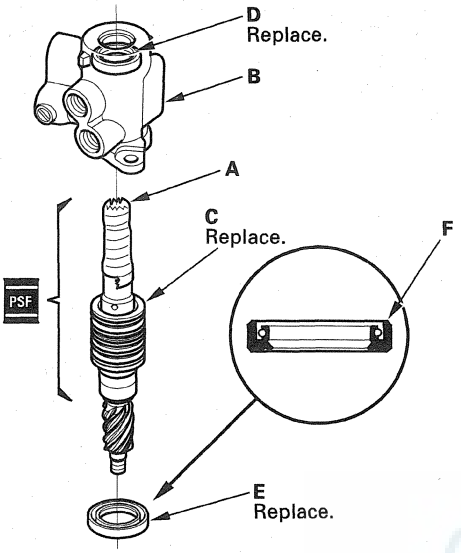

39. Insert the pinion shaft into the valve housing (B). Be careful not to damage the valve seal rings (C) and valve oil seal sealing lip (D).

40. Install the pinion oil seal (E) onto the pinion shaft with its grooved side (F).

41. Remove the vinyl tape from the pinion shaft, then remove any residue from the tape adhesive.

42. Press the pinion shaft/sleeve into the valve housing with a hydraulic press. Check that the pinion shaft/sleeve turns smoothly by hand after installing it.

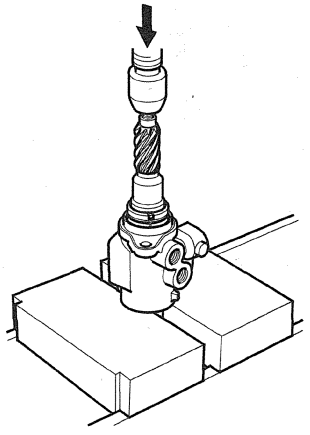

43. Coat the piston seal ring guide with power steering fluid, then slide it onto the rack, big end first.

44. Position the new O-ring (A) and new piston seal ring (B) on the piston seal ring guide, then slide them down toward the big end of the tool.

    Note these items during reassembly:
    - Do not over expand the resin seal rings. Install the resin seal rings with care so as not to damage them. After installation, make sure you contract the seal ring using the piston seal ring sizing tool.
    - Replace the piston's O-ring and seal ring as a set.

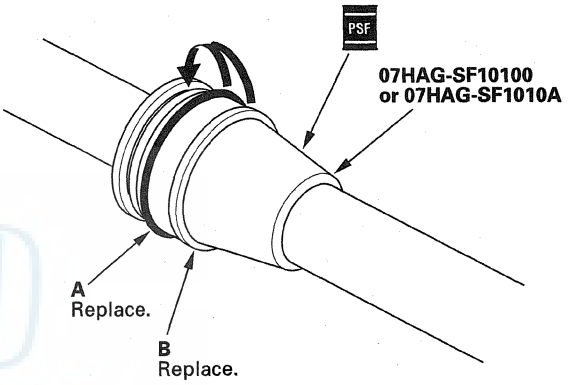

45. Pull the O-ring off into the piston groove, then pull the piston seal ring off into the piston groove on top of the O-ring.

46. Coat the piston seal ring (A) and the inside of the piston seal ring sizing tool with power steering fluid, then carefully slide the tool onto the rack and over the piston seal ring.

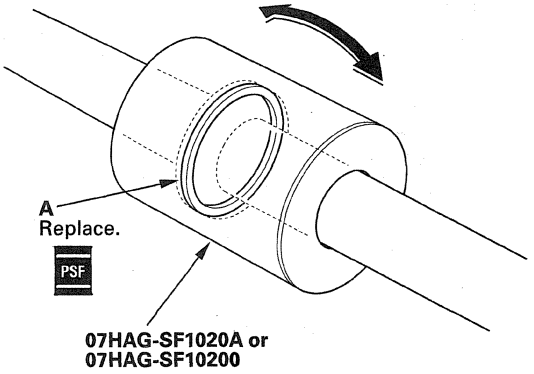

47. Move the piston seal ring sizing tool back and forth several times to make sure the piston seal ring fits snugly in the piston.

48. Coat the sliding surface of the cylinder end seal slider (A) and the new cylinder end seal (B) with power steering fluid. Place the seal on the cylinder end seal slider with its grooved side (C) facing opposite the cylinder end seal slider.

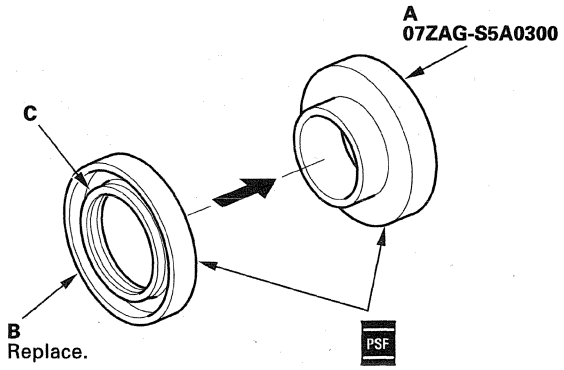

49. Coat the surface of the steering rack (A) with power steering fluid.

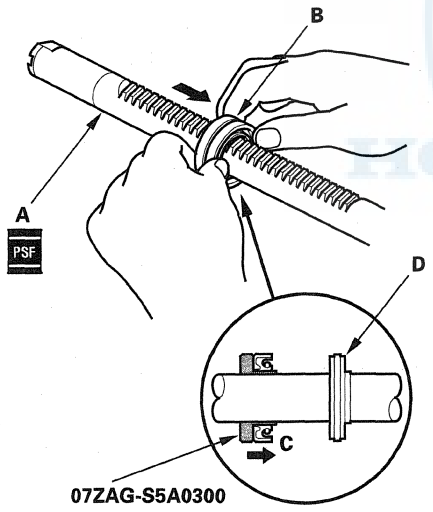

50. Install the cylinder end seal (B) onto the steering rack with its grooved side (C) toward the piston (D).

51. Separate the cylinder end seal from the special tool, then remove the special tool.

52. Install the new backup ring (A) on the steering rack, then place the backup ring and the cylinder end seal (B) against the piston (C).

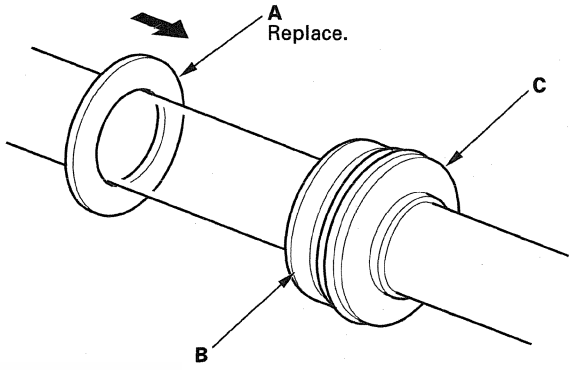

53. Apply multipurpose grease to the steering rack teeth, then insert the steering rack into the gearbox housing. Be careful not to damage the inner surface of the cylinder wall with the rack edges.

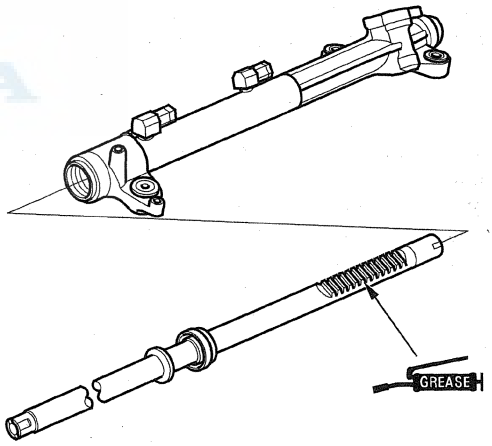

(cont'd)

Steering Gearbox Overhaul (cont'd)

54. Insert an appropriate size deep socket wrench (A) onto the steering rack as shown.

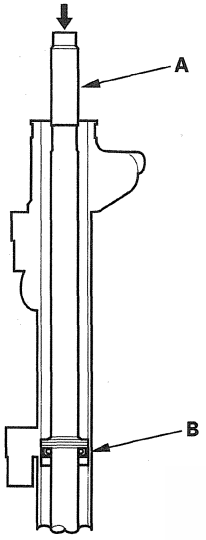

55. Install the cylinder end seal (B) into the bottom of the cylinder by pressing on the tool with a press. Do not push on the tool with excessive force as it may damage the cylinder end seal.

56. Remove the tool, and center the steering rack.

57. Coat the sliding surface of the cylinder end seal slider (A) and new cylinder end seal (B) with power steering fluid. Place the seal on the cylinder end seal slider with its grooved side (C) facing opposite the cylinder end seal slider.

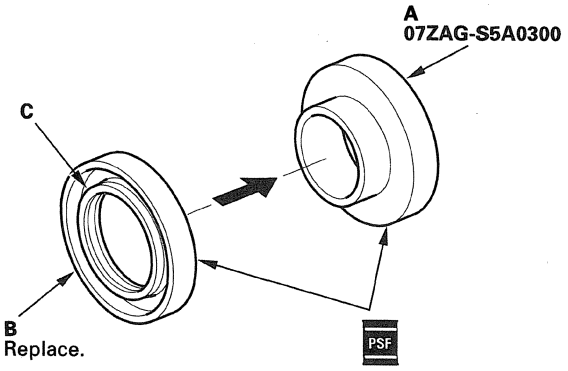

58. Coat the inside surface of the cylinder end seal slider and steering rack with power steering fluid, then install the cylinder end seal (A) onto the steering rack with its grooved side toward the cylinder.

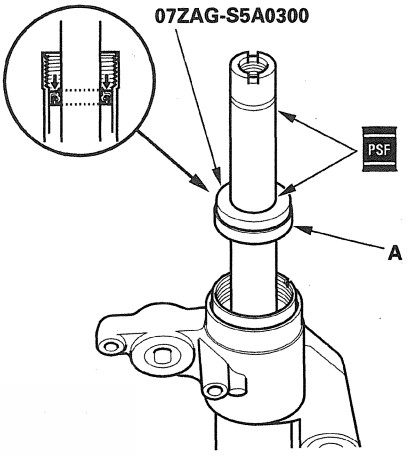

59. Separate the cylinder end seal from the cylinder end seal slider, then remove the cylinder end seal slider.

60. Push in the cylinder end seal with your finger. Be careful not to damage the face of the seal with the threads and burrs at the staked position of the cylinder housing.

61. Hold the gearbox housing using a C-clamp (commercially available) (A) and wooden blocks (B) as shown. Do not clamp the cylinder part of the gearbox housing in the vise.

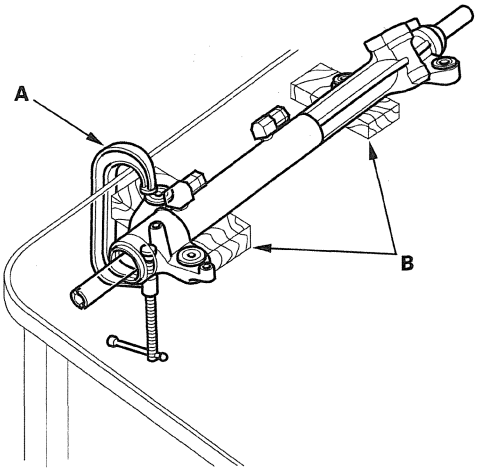

62. Coat the inside surface of the cylinder end (A) with power steering fluid, then install the cylinder end by screwing it into the cylinder (B). Tighten the cylinder end to the specified torque.

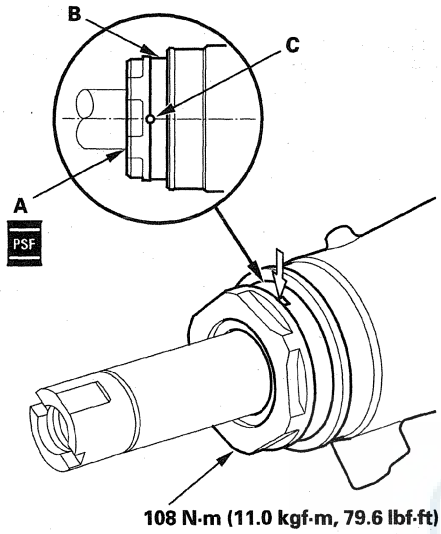

63. Stake (C) the point of the cylinder shown (opposite from where the stake was removed during disassembly).

64. Apply multipurpose grease to the bearing (A) in the gearbox housing, and install the valve body unit (B) and a new gasket (C) by engaging the gears. Note the valve body unit installation position (direction of line connections). Then loosely install the flange bolt.

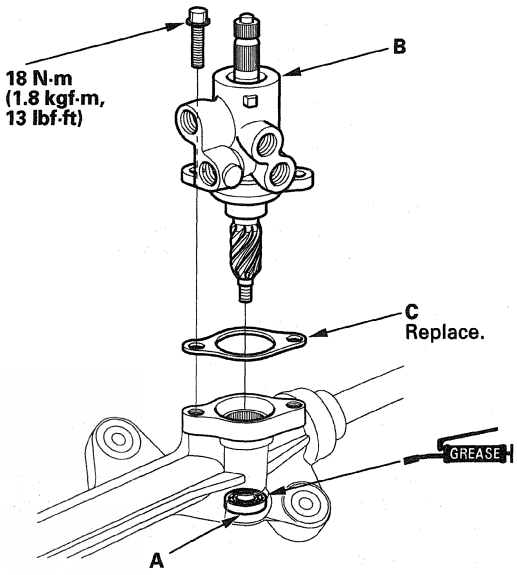

(cont'd)

Steering Gearbox Overhaul (cont'd)

65. Install a new pinion nut (A) onto the pinion shaft end, and tighten to the specified torque.

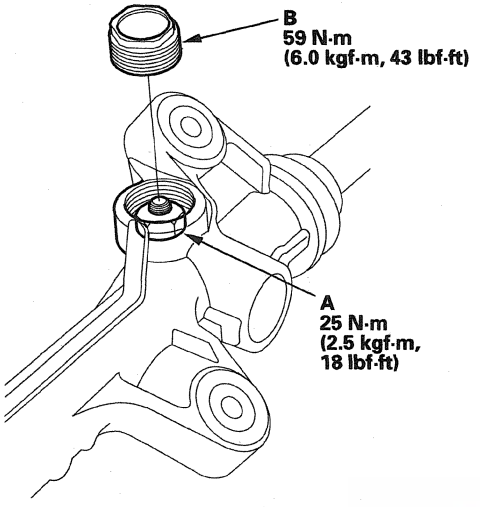

66. Tighten the flange bolt to the specified torque.

67. Apply new sealant (Loctite 565) all the way around the threads on the end plug (B). Install the end plug onto the gearbox housing, then tighten it to the specified torque.

68. After tightening, use a drift to stake (A) the end plug shoulder against the gearbox housing.

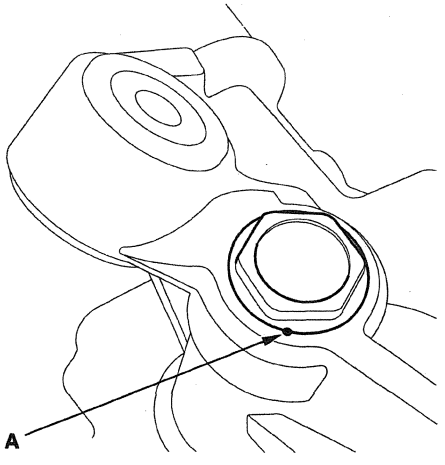

69. Install the stepping valve motor (A), and coat the new O-rings (B) with multipurpose grease.

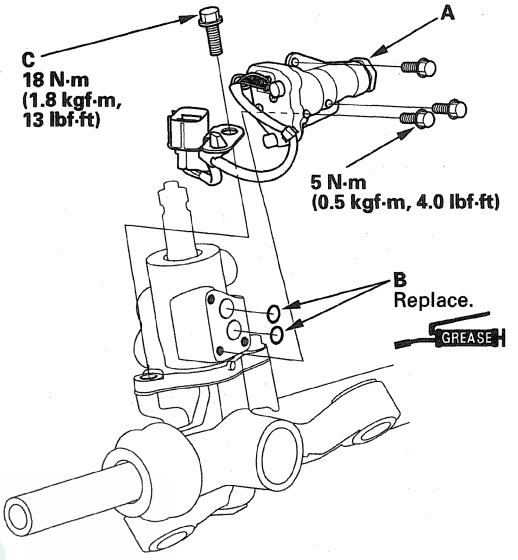

70. Tighten the flange bolt (C) to the specified torque.

71. Before installing the cylinder lines, coat the new O-rings with power steering fluid, then install the lines.

    Note these items during reassembly:
    - *Thoroughly clean the joints of the cylinder lines.* The joints must be free of foreign material.
    - Install the cylinder lines by tightening the flare nuts by hand first, then tighten the flare nuts to the specified torque.

    NOTE: Use a second wrench when tightening the cylinder lines to avoid damaging the fittings on the steering gearbox.

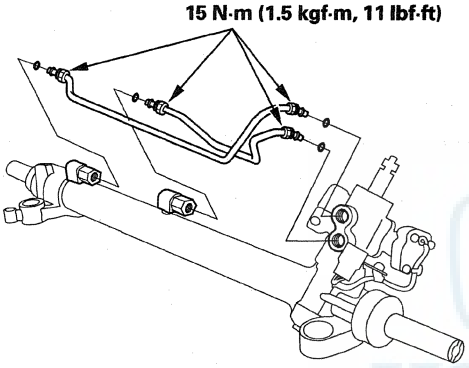

72. Apply multipurpose grease to the sliding surface of the rack guide (A), and install it onto the gearbox housing.

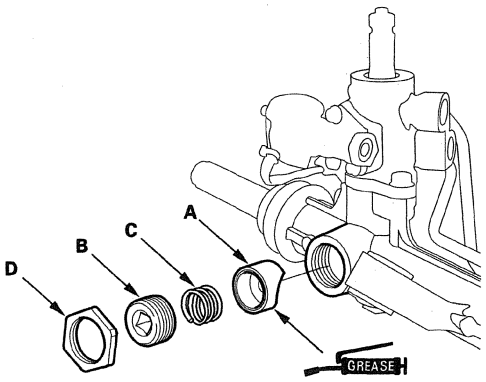

73. Apply new sealant (Three Bond 1141) all the way around the first three threads of the rack guide screw (B), then install the spring (C), the rack guide screw, and the locknut (D).

74. Adjust the rack guide screw (see page 17-33). After adjusting, check that the rack moves smoothly by sliding it right and left.

75. Install a new rubber stop (A) and a new lock washer (B). Align the lock washer tabs (C) with the slots (D). Install the rack end (E) while holding the lock washer in place. Repeat this step for the other side of the rack.

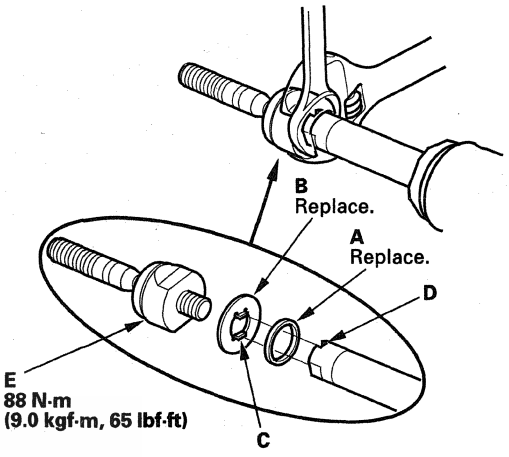

76. Hold the flat surface sections of the steering rack with a wrench, and tighten both rack ends. Be careful not to damage the rack surface with the wrench.

77. Bend the lock washer (A) back against the flat spots on the rack end joint housing.

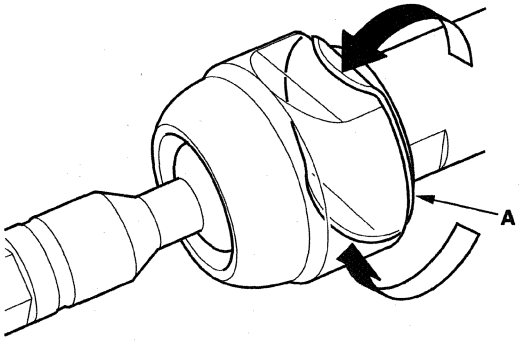

(cont'd)

Steering Gearbox Overhaul (cont'd)

78. Apply multipurpose grease to the circumference of the rack end joint housing (A).

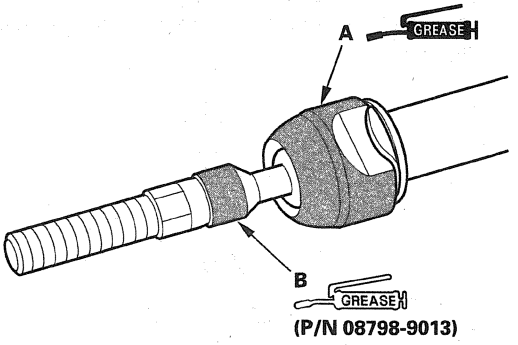

79. Apply a light coat of silicone grease to the boot grooves (B) on the rack ends.

80. Center the steering rack within its stroke.

81. Clean off any grease or contamination from the boot installation grooves (A) and around on the gearbox housing. Install the boots (B) on the rack ends with the tie-rod clips (C), and fit the boot end in the installation grooves in the housing properly.

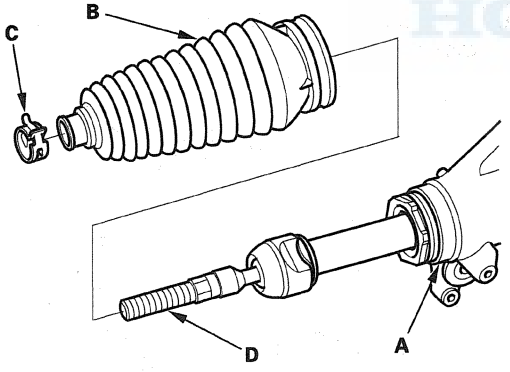

82. After installing the boots, wipe the grease off the threaded section (D) of the rack end.

83. Install the new boot bands by aligning the tabs (A) with the holes (B) of the band.

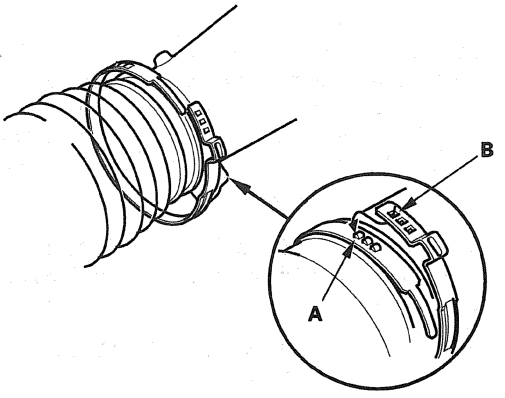

84. Close the ear portion (A) of the band (B) with commercially available pincers, Oetiker 1098 or equivalent (C).

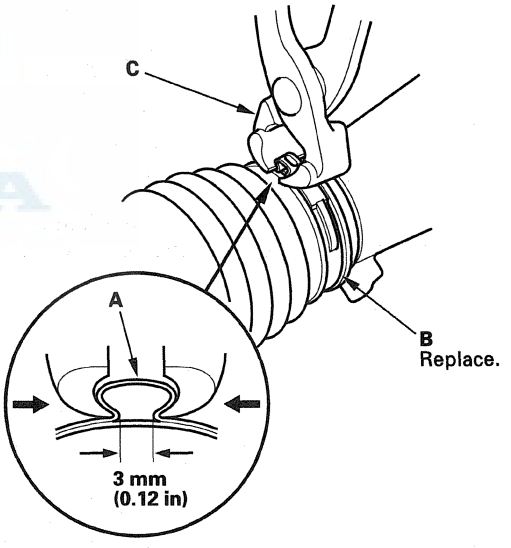

85. Slide the rack right and left to make sure that the boots are not deformed or twisted.

Steering Gearbox Installation

NOTE: Do not turn the steering column shaft. If the column shaft is turned, do the VSA sensor neutral position memorization with the HDS (see page 19-101) after installing the steering gearbox.

1. Before installing the steering gearbox, make sure that no power steering fluid is on the mating surface of the gearbox and front suspension subframe. To prevent the gearbox mounting bolts from loosening after the installation, remove any power steering fluid from the mount cushions and bolt holes.

2. Apply vinyl tape (A) to the splines on the pinion shaft.

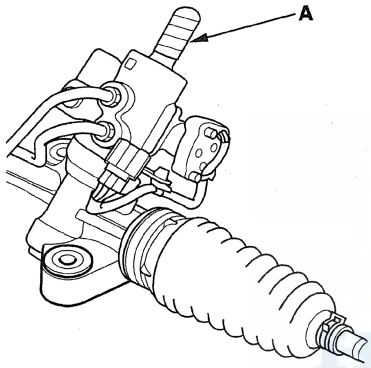

3. Apply a mild soap and water solution to both sides of the mount cushion mating surfaces (A).

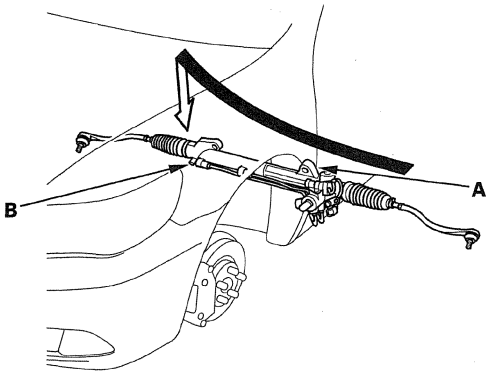

4. Lift and pass the passenger's side of the steering gearbox (B) through the wheelwell opening on the driver's side.

5. Carefully move the steering gearbox toward the passenger's side until the pinion shaft clears the wheelwell opening on the body.

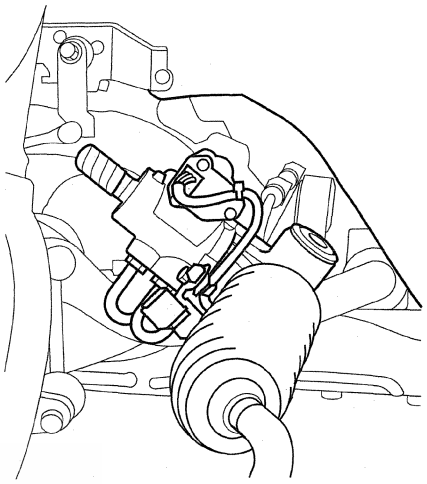

6. Rotate the steering gearbox so the pinion shaft points upward, then move the steering gearbox to the driver's side.

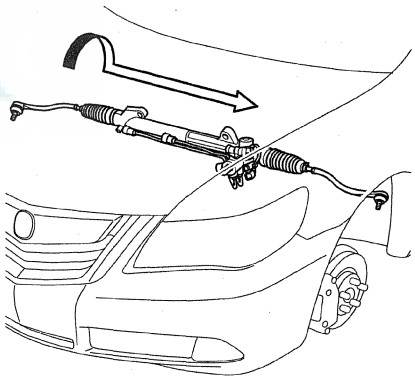

(cont'd)

Steering Gearbox Installation (cont'd)

7. Install the 4-way brake line joint (A). Then reconnect the brake pressure sensor connectors (B) (with ACC).

With ACC:

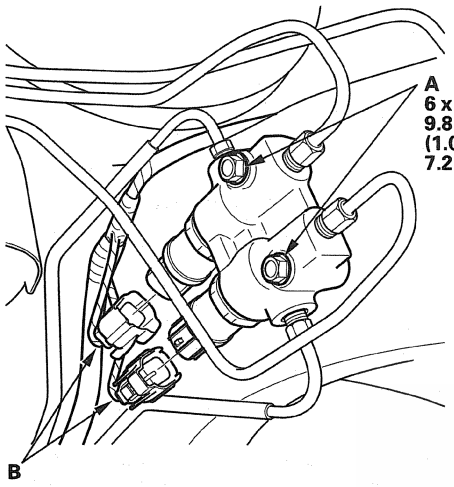

Without ACC:

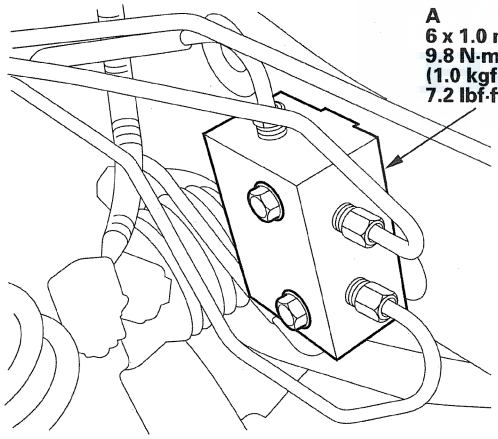

8. Install the new steering gearbox mounting bolt (A) and washer (B) on the left front gearbox mount, then tighten the steering gearbox mounting bolt to the specified torque.

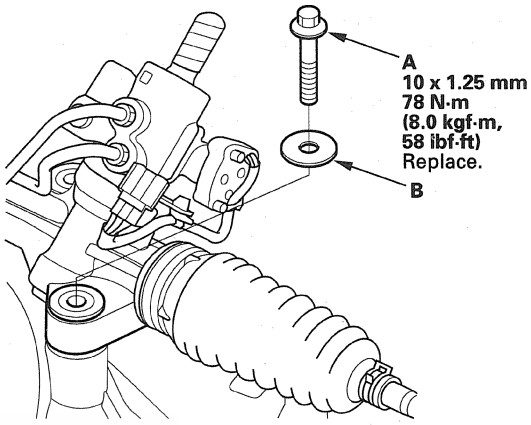

9. Install the new steering gearbox mounting bolt (A) and washer (B) on the right front gearbox mount, then tighten the steering gearbox mounting bolt to the specified torque.

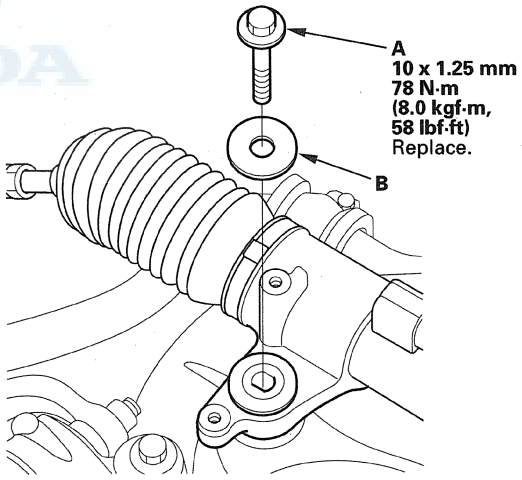

10. Install the gearbox stiffener (A) and the dynamic damper (B), then tighten the new mounting bolts (C) to the specified torque.

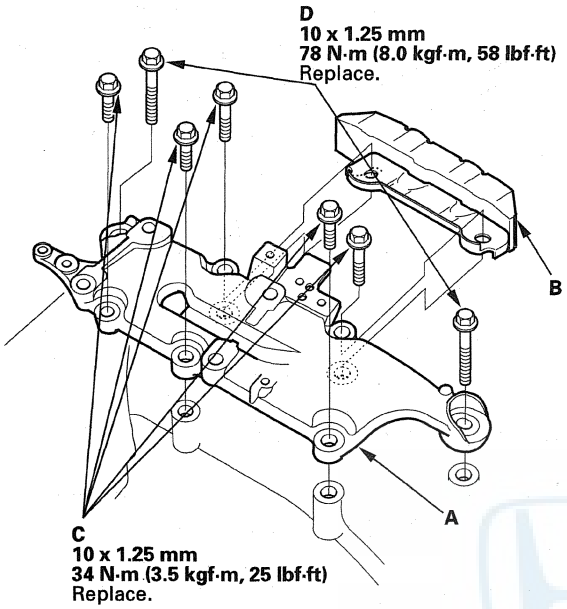

11. Install the new steering gearbox mounting bolts (D), then tighten the steering gearbox mounting bolts to the specified torque.

12. Install the P/S heat shield (A).

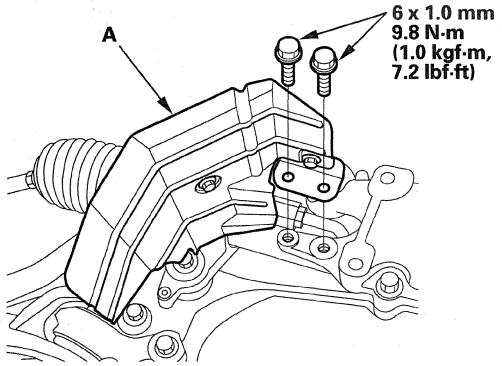

13. Install the return line joint (A) in the steering gearbox, then tighten it to the specified torque.

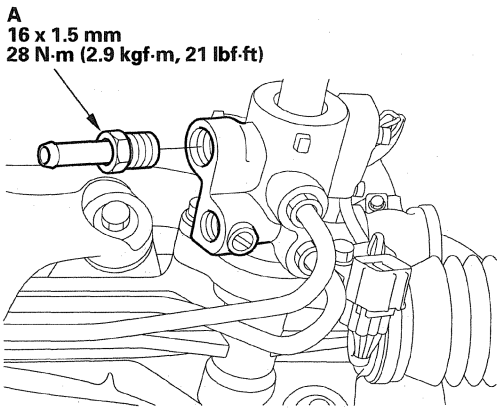

14. Connect the feed line (A), and tighten the 14 mm flare nut to the specified torque.

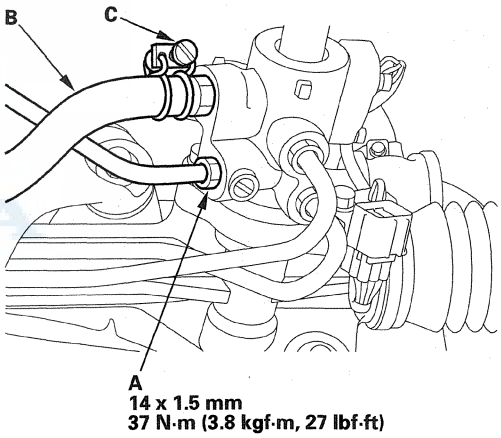

15. Connect the return hose (B) securely, and tighten the adjustable hose clamp (C) (see page 17-14).

(cont'd)

Steering Gearbox Installation (cont'd)

16. Connect the ECPS valve motor connector (A).

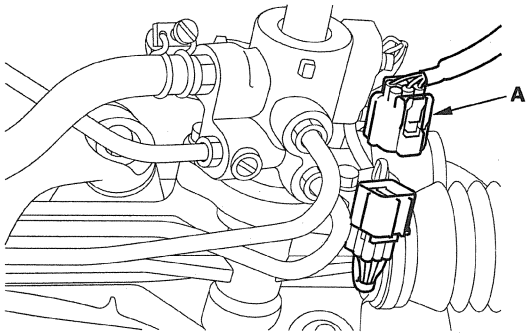

17. Install the feed line holder mounting bolt (A) and return line holder mounting bolt (B) on the gearbox.

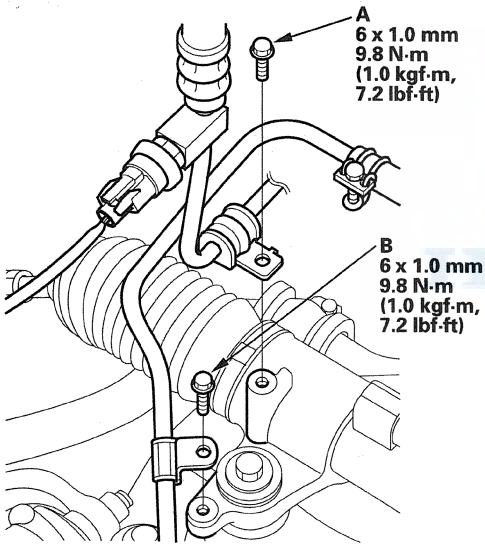

18. Install the feed line holder mounting bolt (A) and A/T shift cable holder mounting bolt (B) on the gearbox stiffener.

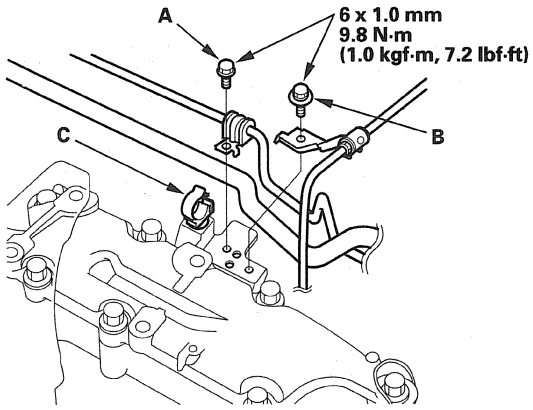

19. Install the return hose in the clamp (C).

20. Connect the engine mount vacuum hose (A) in the rear engine mount.

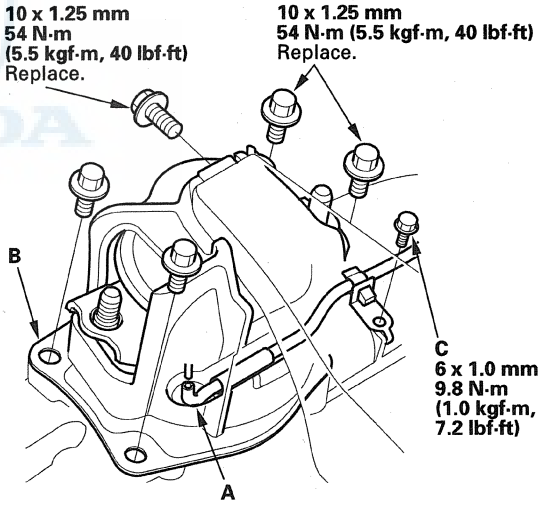

21. Install the rear engine mount (B), then tighten the new mounting bolts and the engine mount vacuum hose holder mounting bolt (C) on the gearbox stiffener to the specified torque.

22. Install the nuts (A) on the rear engine mount, then tighten them to the specified torque.

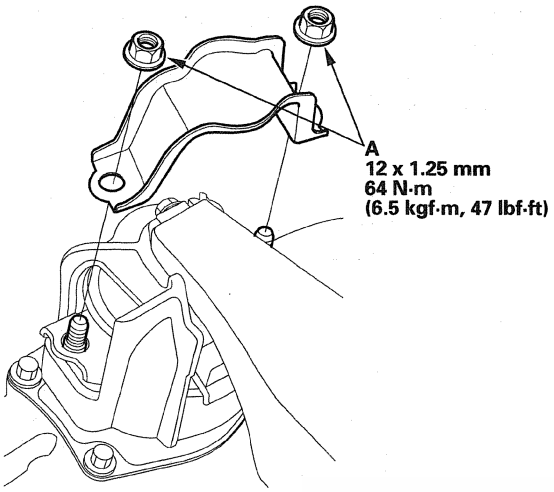

23. Wipe off any grease from the ball joint tapered section and threads, then reconnect the tie-rod end (A) to the knuckle arms.

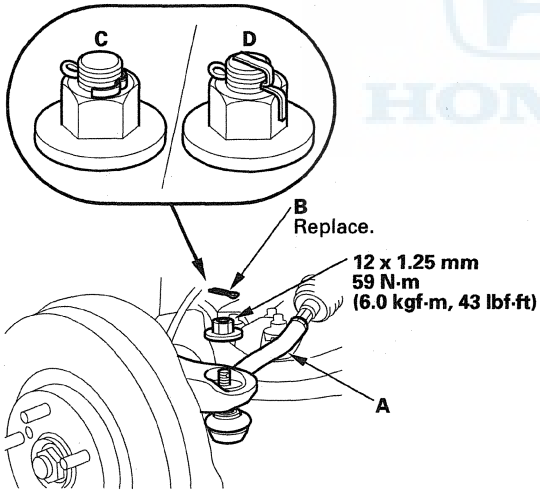

24. Install the tie-rod end ball joint nut, and tighten it to the specified torque, then install the new cotter pin (B), and bend it as shown (C) or (D).

25. Install the front wheels, and set them in the straight ahead position.

26. Remove the vinyl tape from the pinion shaft, and install the pinion shaft grommet (A). Align the slot in the pinion shaft grommet with the lug portion (B) on the valve housing.

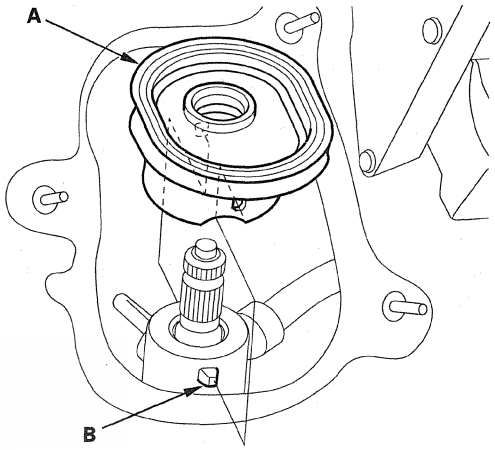

27. Install the new cover seal (A) all the way around in the steering joint cover B. Make sure there are no wrinkles in the seal, then install the steering joint cover B.

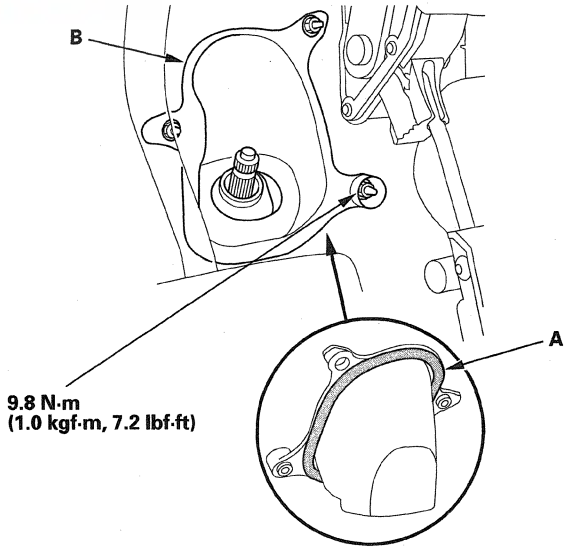

(cont'd)

Steering Gearbox Installation (cont'd)

28. Install, and position the center guide (A) as shown.

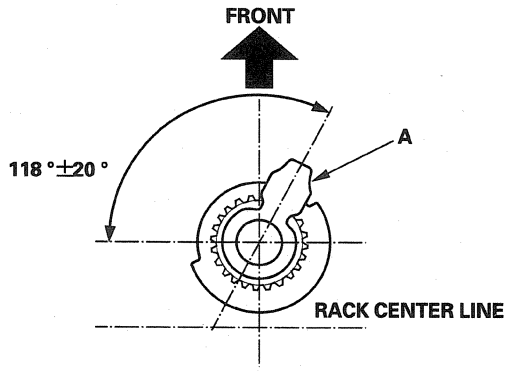

29. Install the steering joint (A) aligning the slit (B) of the steering joint with the tab (C) of the center guide.

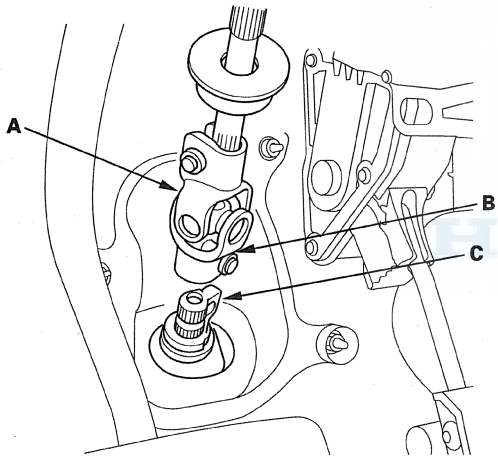

30. Align the bolt hole (A) on the steering joint with the groove (B) around the pinion shaft, and loosely install the joint bolts (C). Be sure that the joint bolt is securely in the groove in the pinion shaft. Pull on the steering joint to make sure that the steering joint is fully seated. Tighten the steering joint bolts to the specified torque.

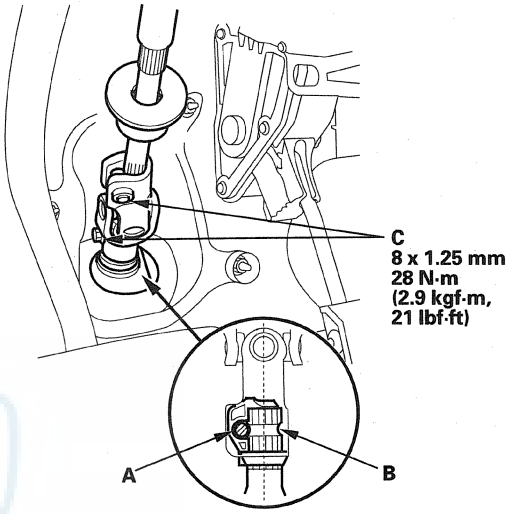

31. Install the steering joint cover A.

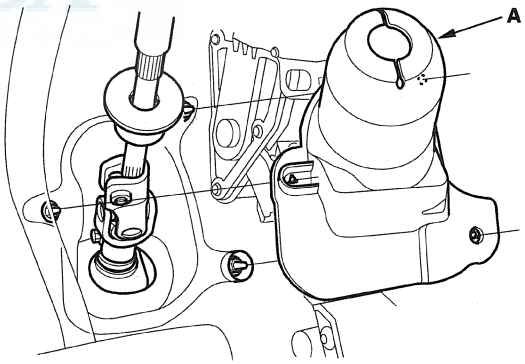

32. Install the relay box (A), then connect the wire harness clips.

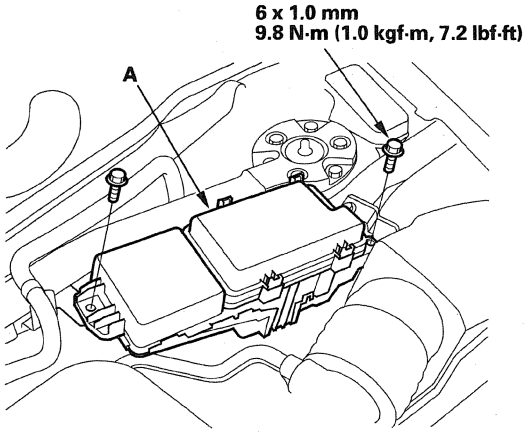

33. Install the front strut brace (see page 20-189).

34. Install the steering wheel (see page 17-24) and the driver's airbag (see page 24-197).

35. Do the battery terminal reconnection procedure (see page 22-91), and do these tasks:

- Turn the ignition switch to ON (II) and check that the SRS indicator comes on for about 6 seconds and then goes off.
- Make sure the horn and the turn signal switches work properly.
- Make sure the steering wheel switches work properly.

36. Fill the system with power steering fluid, and bleed air from the system (see page 17-13).

37. After installation, do the following checks.

- Start the engine, allow it to idle, and turn the steering wheel from lock-to-lock several times to warm up the fluid. Check the gearbox for leaks (see page 17-12).
- Check that the ECPS indicator does not come on.
- Check the steering wheel spoke angle. If the steering spoke angles to the right and left are not equal (steering wheel and rack are not centered), correct the engagement of the joint/pinion shaft serrations.
- Set the steering column to the center tilt position, then do the front toe inspection (see page 18-6).

38. Install the left and right upper fender trim (A) and left upper trim (B) (see page 20-162).

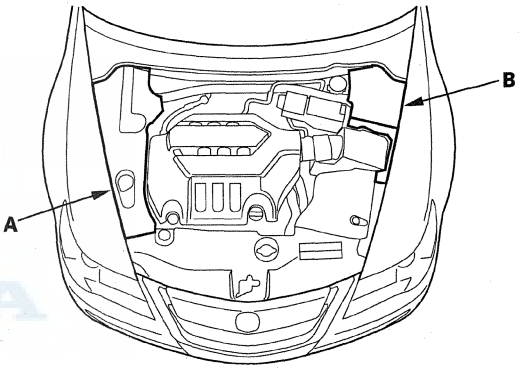

Tie-rod End Ball Joint Boot Replacement

Special Tools Required
Front hub dis/assembly tool 07965-SA50500

1. Remove the ball joint boot from the tie-rod end, and wipe the old grease off the ball pin.
2. Pack the lower area of the ball pin (A) with fresh multipurpose grease.

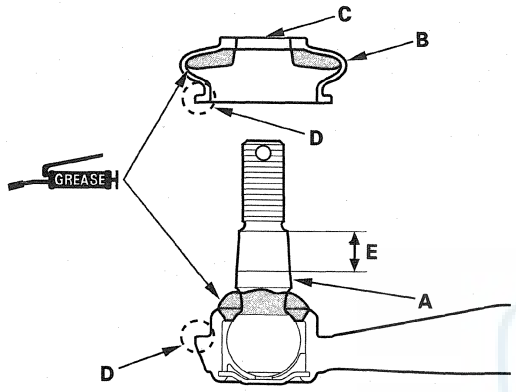

3. Pack the interior of the new ball joint boot (B) and lip (C) with fresh multipurpose grease.

   Note these items when installing new grease:
   - Keep grease off the boot mounting area (D) and the tapered section (E) of the ball pin.
   - Do not allow dust, dirt, or other foreign materials to enter the boot.

4. Install the new ball joint boot (A) using the special tool. The boot must not have a gap at the boot installation sections (B). After installing the boot, check the ball pin tapered section for grease contamination, and wipe it if necessary.

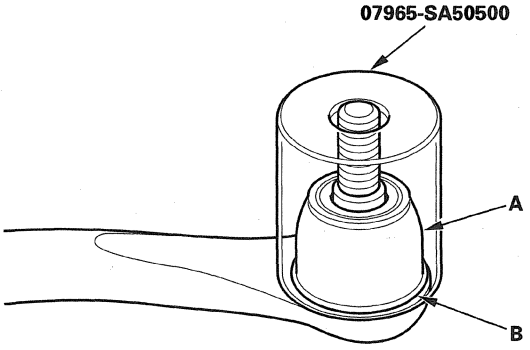

Gearbox Mount Cushion Replacement

1. Remove the steering gearbox (see page 17-35).
2. Position a 34 mm socket (A) on the flange part of the gearbox housing with a washer (B), a 10 x 105 mm flange bolt (C), and a 10 mm nut (D) as shown.

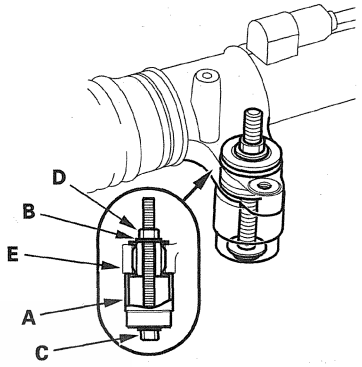

3. Hold the flange bolt with a wrench, and tighten the nut with another wrench. Remove the gearbox mount cushion (E).
4. Apply a mild soap and water solution to the new gearbox mount cushion surface (A), then place it on the gearbox mounting cushion hole.

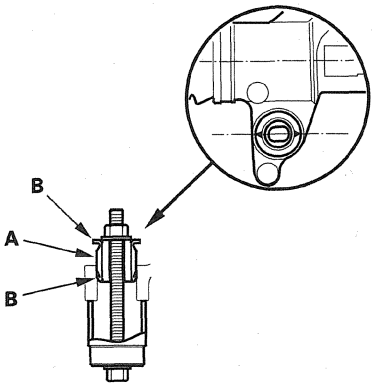

5. Position the 34 mm socket on the flange part of the gearbox housing with a washer, a flange bolt, and a nut as shown.
6. Install the gearbox mount cushion by tightening the nut until the mount cushion edges (B) properly fit on the gearbox flange surface.

Component Location Index

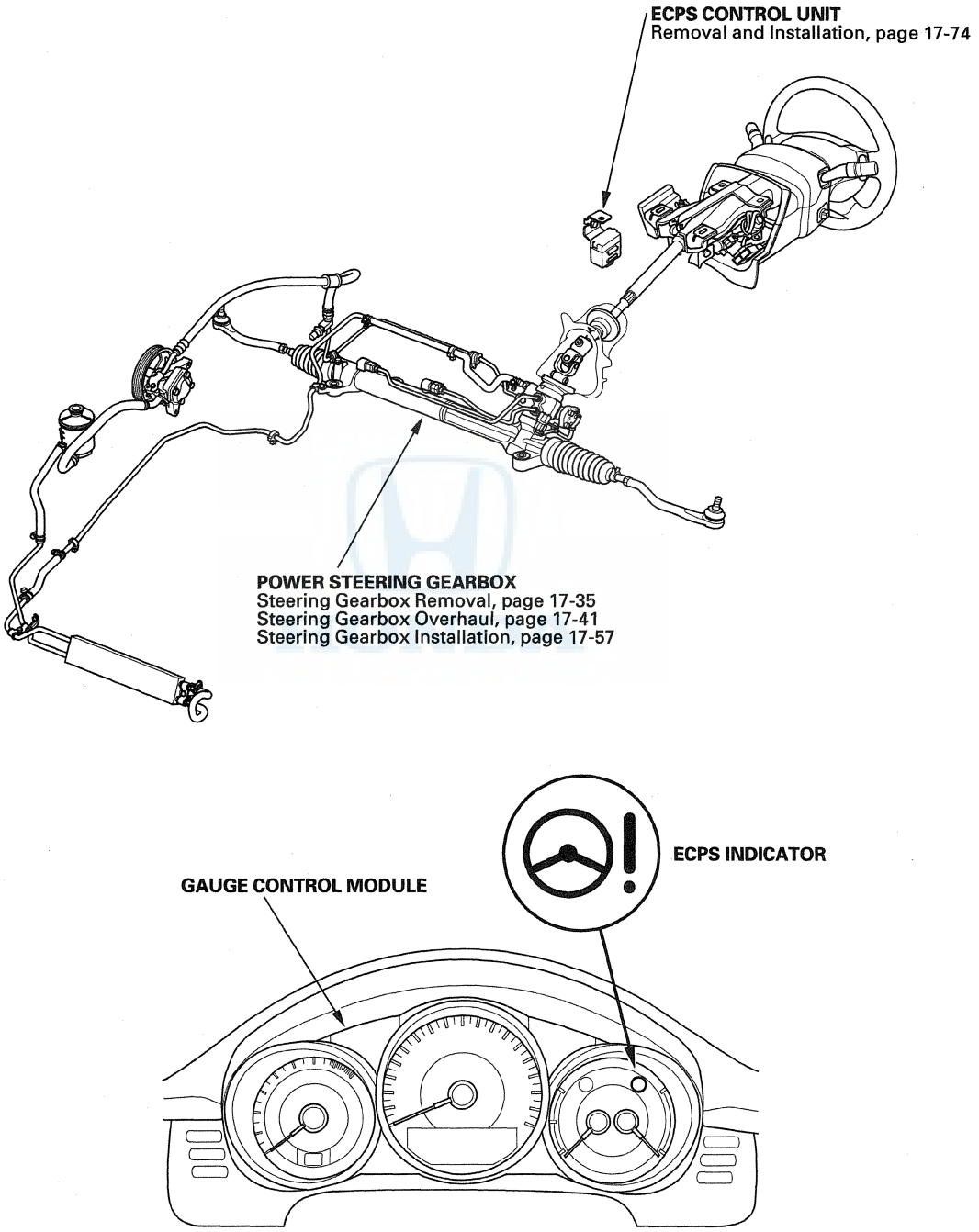

Electronically Controlled Power Steering System

System Description

System Outline

This vehicle is equipped with an Electronically Controlled Power Steering System (ECPS). Depending on the vehicle speed, the ECPS control unit controls the ECPS valve. The ECPS valve changes the P/S fluid pressure of the pressure side of the power cylinder. By controlling the P/S fluid pressure electrically, it made it possible to supply stable P/S fluid pressure to the power cylinder which ensures that the steering feel is not influenced by the fluctuation of the engine's speed, and corresponds to the driving situation.

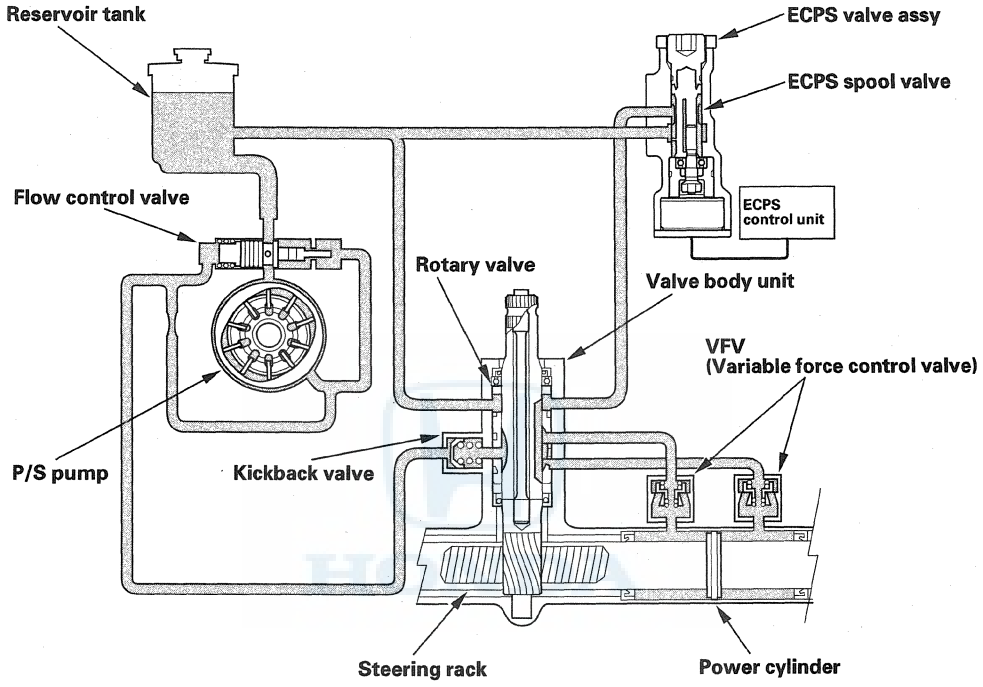

Flow control valve
This valve stabilizes the P/S fluid pressure of the power steering pump output.

ECPS valve assembly
The spool valve built in the ECPS valve assembly is operated by the stepping motor which is controlled by the ECPS control unit. It changes the P/S fluid pressure to the power cylinder. When this valve closes, the pressure to the power cylinder increases.

Valve body unit
The rotary valve built in the valve body unit is driven by the rotation of the steering wheel. This changes the fluid passage between the power steering pump side, power cylinder side, reservoir side, and the ECPS valve side.

Kickback valve
When kickback occurs from the from steering rack, the kickback valve in the feed port decreases the kickback to the steering wheel.

VFV (Variable force control valve)
The valve lessens rapid P/S oil pressure change.

ECPS control unit

The ECPS control unit controls the stepping motor built inside the ECPS valve assembly depending on the engine speed signal and the vehicle speed signal from the PCM. When a failure occurs, this unit stores a DTC and sends a signal to the gauge assembly to turn on the ECPS indicator.

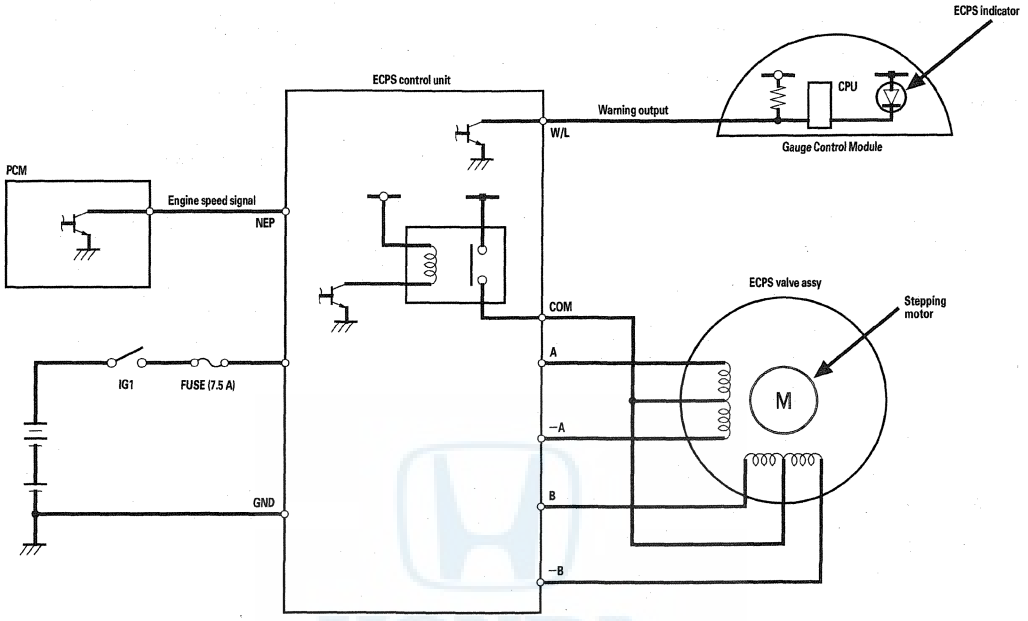

HONDA

(cont'd)

System Description (cont'd)

Operation when the vehicle is stopped (high assist)
When the vehicle is stopped, the ECPS control unit closes the ECPS spool valve. When the steering wheel is turned, the passage between the increase side power cylinder room and the pump opens at the rotary valve. Because the spool valve is closed, all P/S fluid pressure is guided to the increase side power cylinder room passing the variable aperture of vehicle moving (A) at the rotary valve. At the same time, the passage between the decrease pressure side of the power cylinder room and the reservoir opens at the rotary valve, and the P/S fluid inside the decrease side of the power cylinder room returns to the reservoir. By this operation, the power steering system assists with strong force depending on the variable aperture of stationary steering (B) clearance.

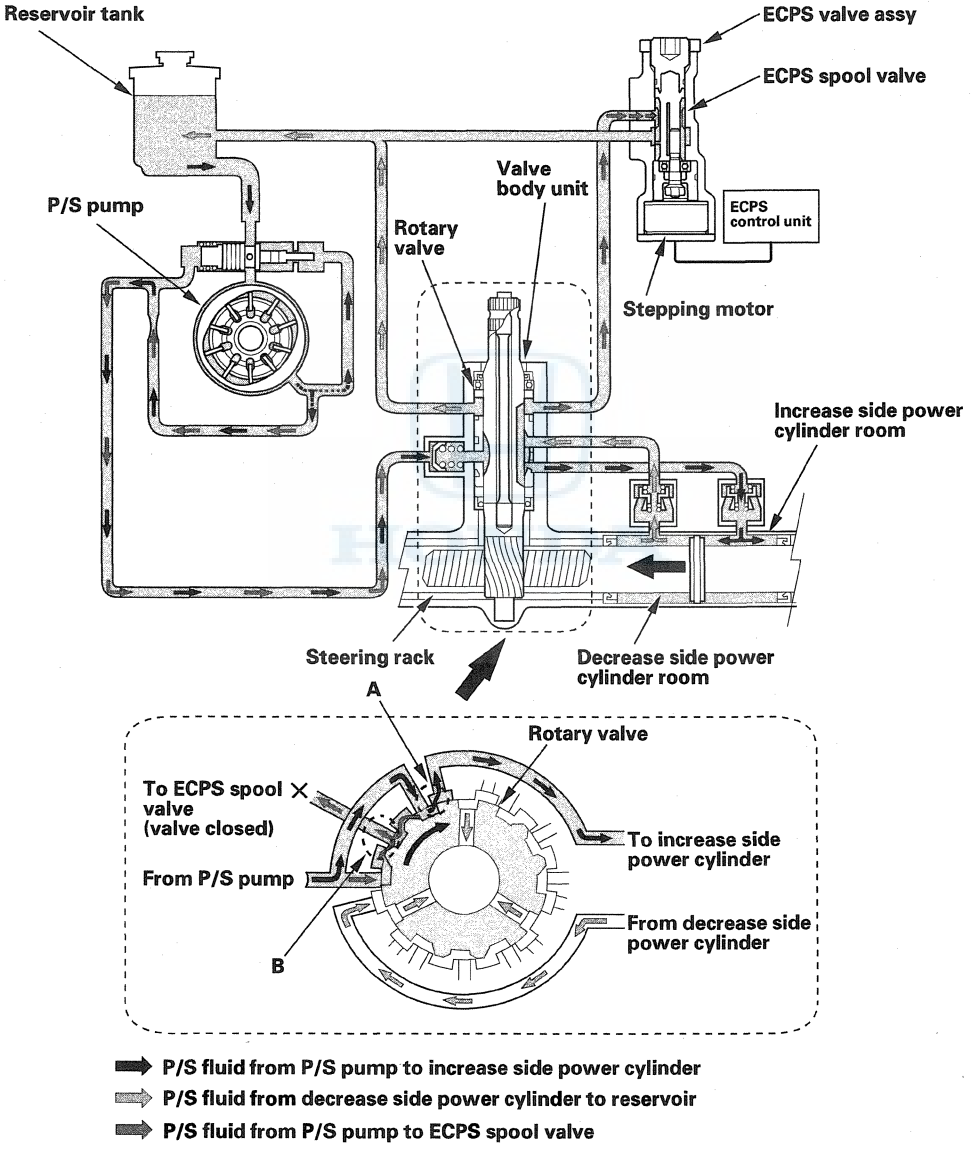

Operation when the vehicle is moving (duty assist)

The ECPS control unit duty controls the ECPS spool valve depending on the vehicle speed. When the steering wheel is rotated, the P/S fluid amount to the increase side of the power cylinder room changes depending on the clearance of the variable aperture of stationary steering (A), variable aperture of high speed steering (B), and the variable aperture of the ECPS spool valve (C). The assist force is controlled with the synthetic valve of these three aperture clearance. Because the synthetic clearance is larger than the vehicle in stopped condition, the power steering assist force is controlled lower.

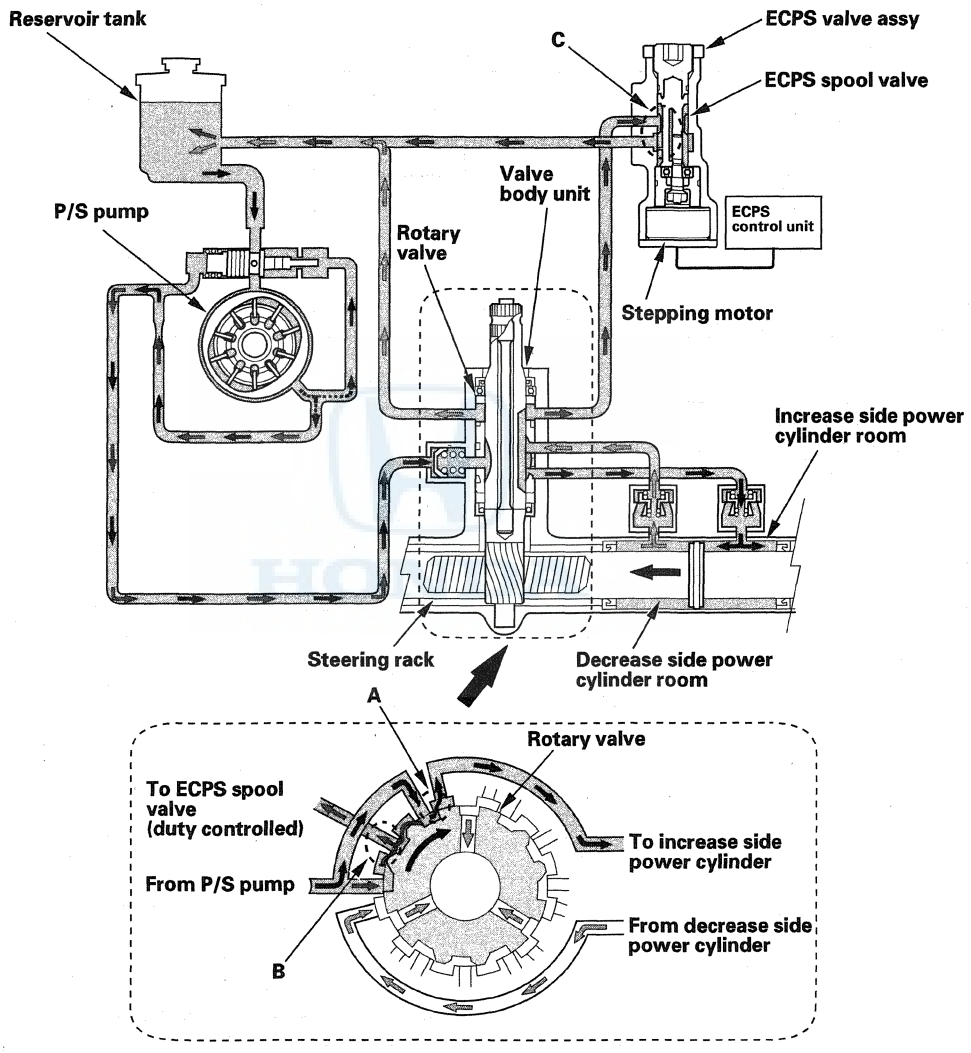

Circuit Diagram

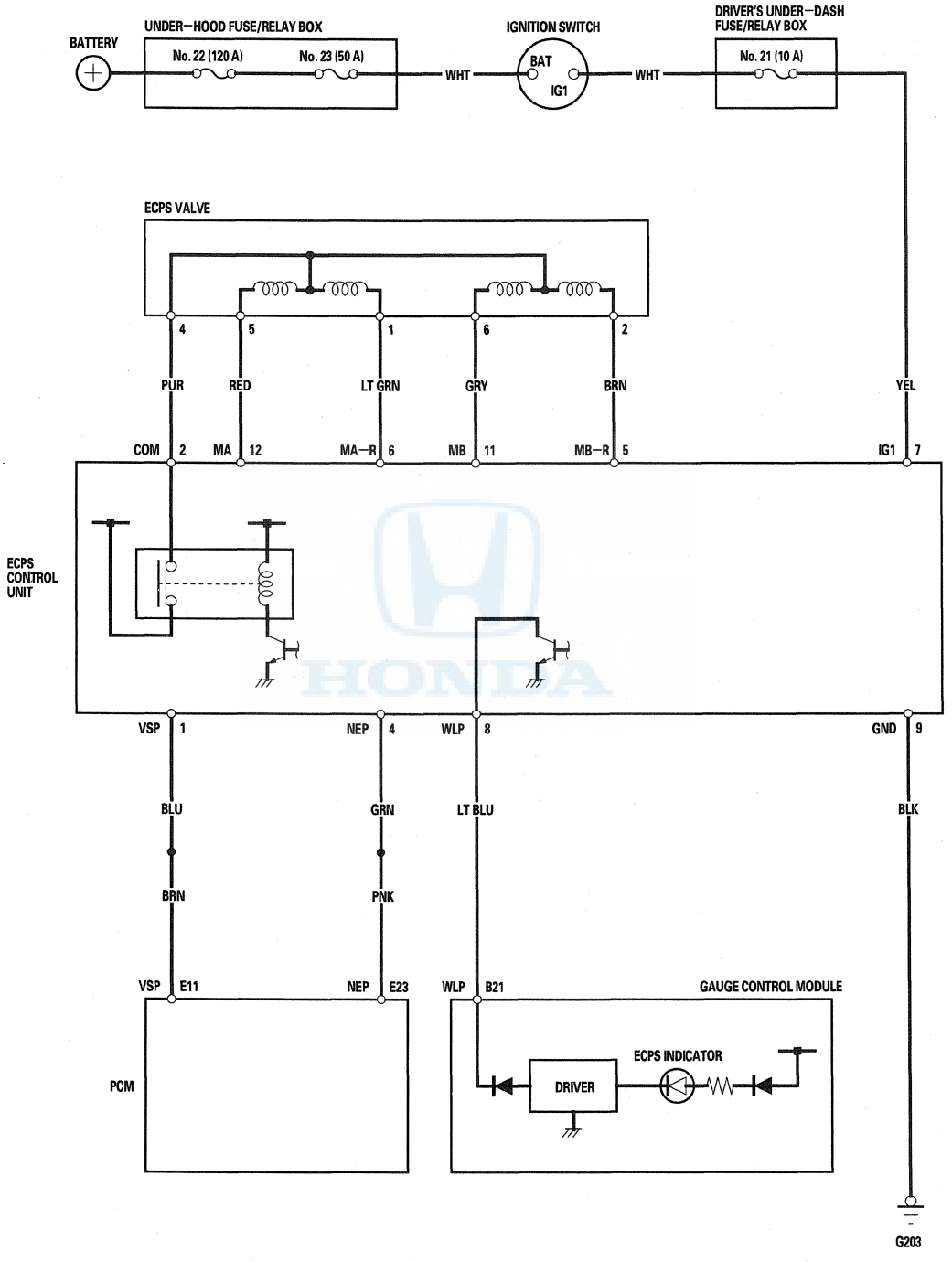

ECPS indicator does not go off after the engine is started

NOTE: High engine speed (1,700 rpm or above) when the vehicle is not moving may cause the ECPS indicator to come on.

1. Disconnect the ECPS control unit 12P connector.
2. Turn the ignition switch to ON (II).
3. Measure the voltage between ECPS control unit 12P connector terminal No. 8 and body ground.

ECPS CONTROL UNIT 12P CONNECTOR

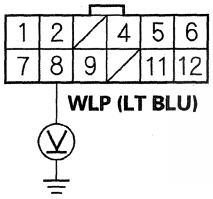

Wire side of female terminals

Is there about 5 V?

YES—Go to step 4.

NO—Repair an open in the wire between the ECPS control unit and the gauge control module.■

4. Connect ECPS control unit 12P connector terminal No. 8 and body ground with a jumper wire.

ECPS CONTROL UNIT 12P CONNECTOR

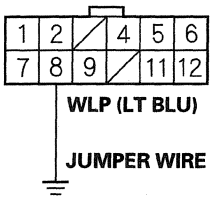

Wire side of female terminals

Does the ECPS indicator go off?

YES—Go to step 5.

NO—Do the troubleshooting for the gauge control module (see page 22-396).■

5. Disconnect the jumper wire.
6. Measure the voltage between body ECPS control unit 12P connector terminal No. 7 and body ground.

ECPS CONTROL UNIT 12P CONNECTOR

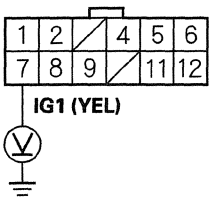

Wire side of female terminals

Is there battery voltage?

YES—Go to step 7.

NO—Repair an open in the wire between the ECPS control unit 12P connector and No. 21 fuse in the driver's under-dash fuse/relay box.■

(cont'd)

Symptom Troubleshooting (cont'd)

7. Measure the voltage between ECPS control unit 12P connector terminal No. 9 and body ground.

ECPS CONTROL UNIT 12P CONNECTOR

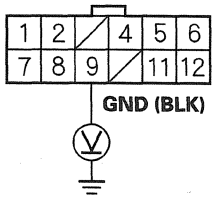

Wire side of female terminals

Is there less than 0.1 V?

YES—Go to step 8.

NO—Repair an open in the wire between the ECPS control unit 12P connector and body ground (G203).■

8. Measure the resistance between ECPS control unit 12P connector terminals No. 2 and No. 5, No. 6, No. 11, and No. 12 individually.

ECPS CONTROL UNIT 12P CONNECTOR

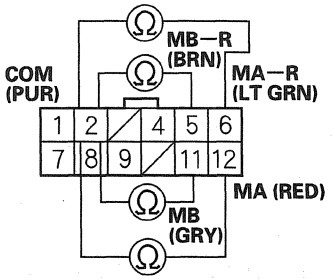

Wire side of female terminals

Is the resistance between 19.8 to 24.2 Ω at 68 °F (20 °C)?

YES—Go to step 9.

NO—Check for and repair an open/ or a short in the wires between the ECPS control unit 12P connector and the stepping valve motor. If the wires are OK, the ECPS valve is faulty; replace the ECPS valve.■

9. Start the engine.

10. Measure the voltage between ECPS control unit 12P connector terminal No. 4 and body ground.

ECPS CONTROL UNIT 12P CONNECTOR

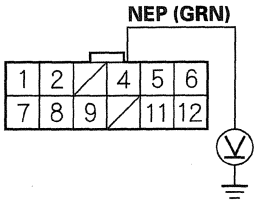

Wire side of female terminals

Is there about 5.0 V?

YES—Check for loose connector terminals in the ECPS control unit 12P connector and repair if necessary. If the terminals are OK, replace the ECPS control unit (see page 17-74). ■

NO—Repair an open in the GRN wire between the ECPS control unit and PCM connector E (31P). ■

ECPS indicator comes on while driving the vehicle (but the ECPS indicator goes off after the engine is restarted)

Repair an open in the BLU wire between the ECPS control unit 12P connector and PCM connector E (31P), or repair the poor connection in the ECPS circuit. ■

Symptom Troubleshooting (cont'd)

ECPS indicator comes on, but there is no power assist

- Hard steering
- Uneven or rough steering

1. Turn the ignition switch to ON (II).

   Is there a clicking noise from the ECPS valve for 2 to 3 seconds?

   YES—The ECPS system is OK at this time. Go to Symptom Troubleshooting (see page 17-7).■

   NO—Faulty ECPS control unit or the ECPS valve, replace the ECPS control unit (see page 17-74) or the valve housing and stepping valve motor (see page 17-41).■

ECPS Control Unit Removal/ Installation

1. Remove the driver's dashboard undercover (see page 20-100), and the driver's dashboard lower cover (see page 20-100).

2. Disconnect the connector (A) from the ECPS control unit, and remove the bolt (B).

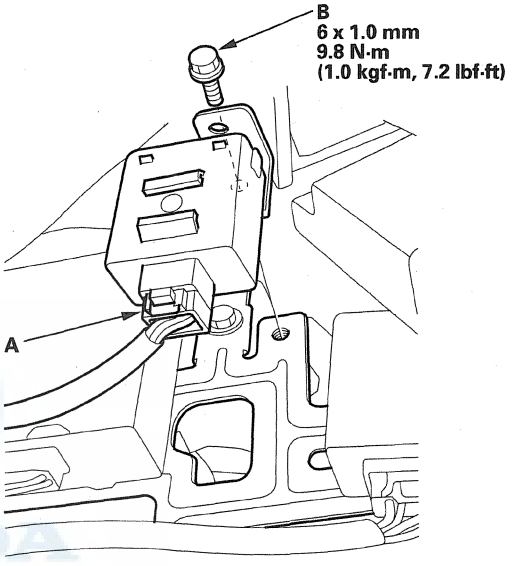

3. Install the ECPS control unit in the reverse order of removal.

Suspension

Front and Rear Suspension

Special Tools 18-2
Component Location Index 18-3
Wheel Alignment 18-5
Wheel Bearing End Play Inspection 18-8
Wheel Runout Inspection 18-8
Wheel Bolt Replacement 18-9
Ball Joint Removal 18-10

Front Suspension

Knuckle/Hub Bearing Unit Replacement 18-11
Ball Joint Boot Replacement 18-15
Upper Arm Replacement 18-16
Lower Arm Removal/Installation 18-17
Stabilizer Link Removal/Installation 18-19
Stabilizer Bar Replacement 18-20
Damper/Spring Removal and Installation 18-21
Damper/Spring Disassembly, Inspection, and Reassembly 18-23

Rear Suspension

Knuckle/Hub Bearing Unit Replacement 18-26
Ball Joint Boot Replacement 18-31
Upper Arm Replacement 18-32
Lower Arm A Replacement 18-33
Control Arm Replacement 18-33
Lower Arm B Removal and Installation 18-34
Stabilizer Link Removal/Installation 18-36
Stabilizer Bar Replacement 18-37
Damper Replacement 18-38
Spring Replacement 18-42

TPMS (Tire Pressure Monitoring System) 18-45

Special Tools

Ref. No.	Tool Number	Description	Qty
①	07AAE-SJAA100	Ball Joint Thread Protector, 14 mm	1
②	07AAF-SDAA100	Ball Joint Thread Protector, 12 mm	1
③	07AAF-SECA120	Ball Joint Thread Protector, 10 mm	1
④	070AG-SJA0200	Ball Joint Boot Clip Guide, 53 mm	1
⑤	070AG-SJA0300	Ball Joint Boot Clip Guide, 45 mm	1
⑥	07MAC-SL0A102	Ball Joint Remover, 32 mm	1
⑦	07MAC-SL0A202	Ball Joint Remover, 28 mm	1
⑧	07MAG-SL00200	Ball Joint Boot Clip Guide, 51 mm	1

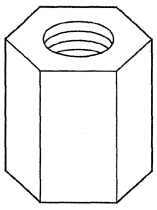

①, ②, ③

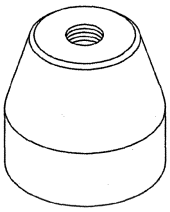

④, ⑤, ⑧

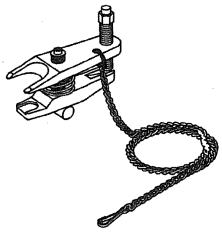

⑥, ⑦

Component Location Index

Front Suspension

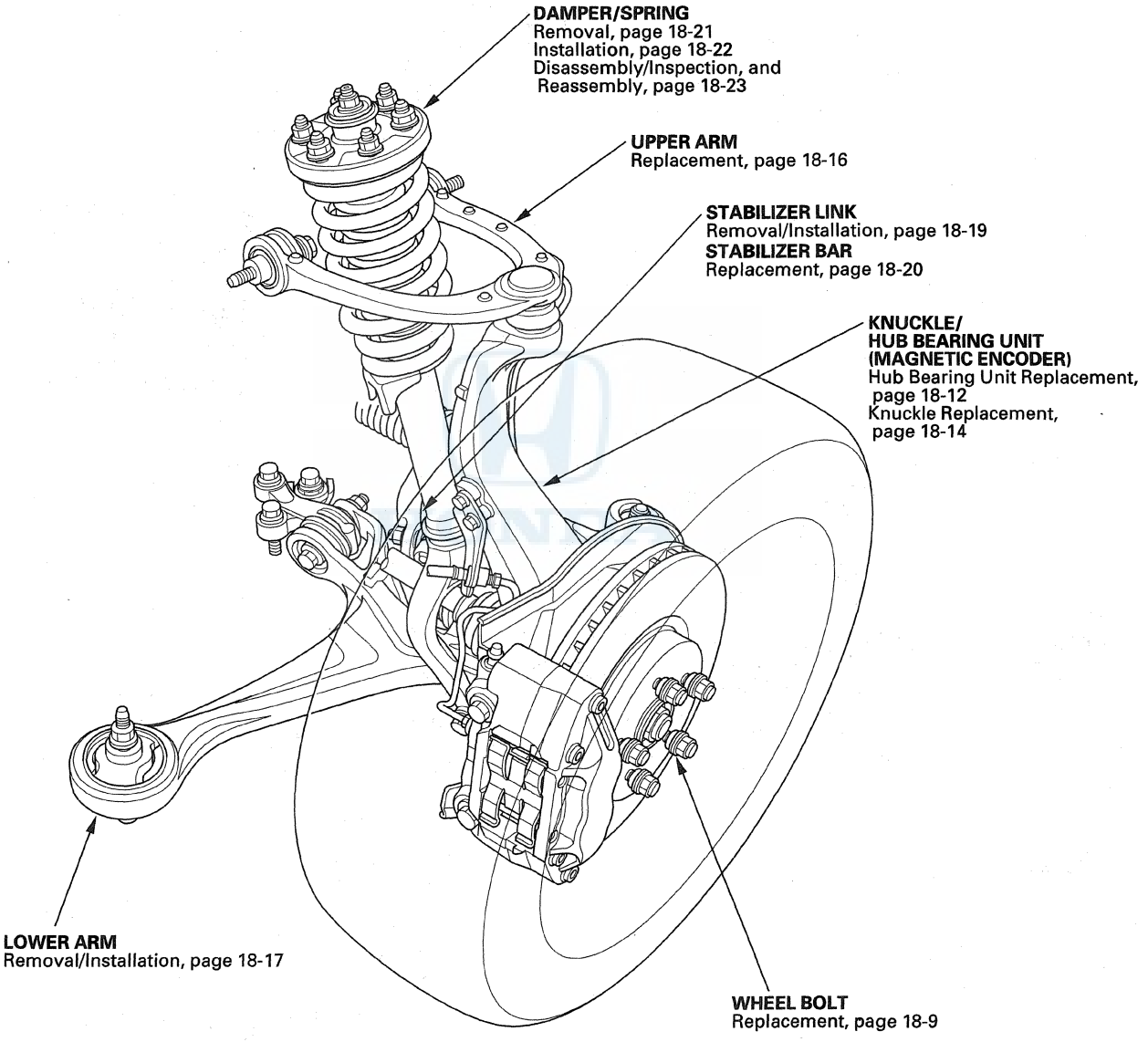

Component Location Index (cont'd)

Rear Suspension

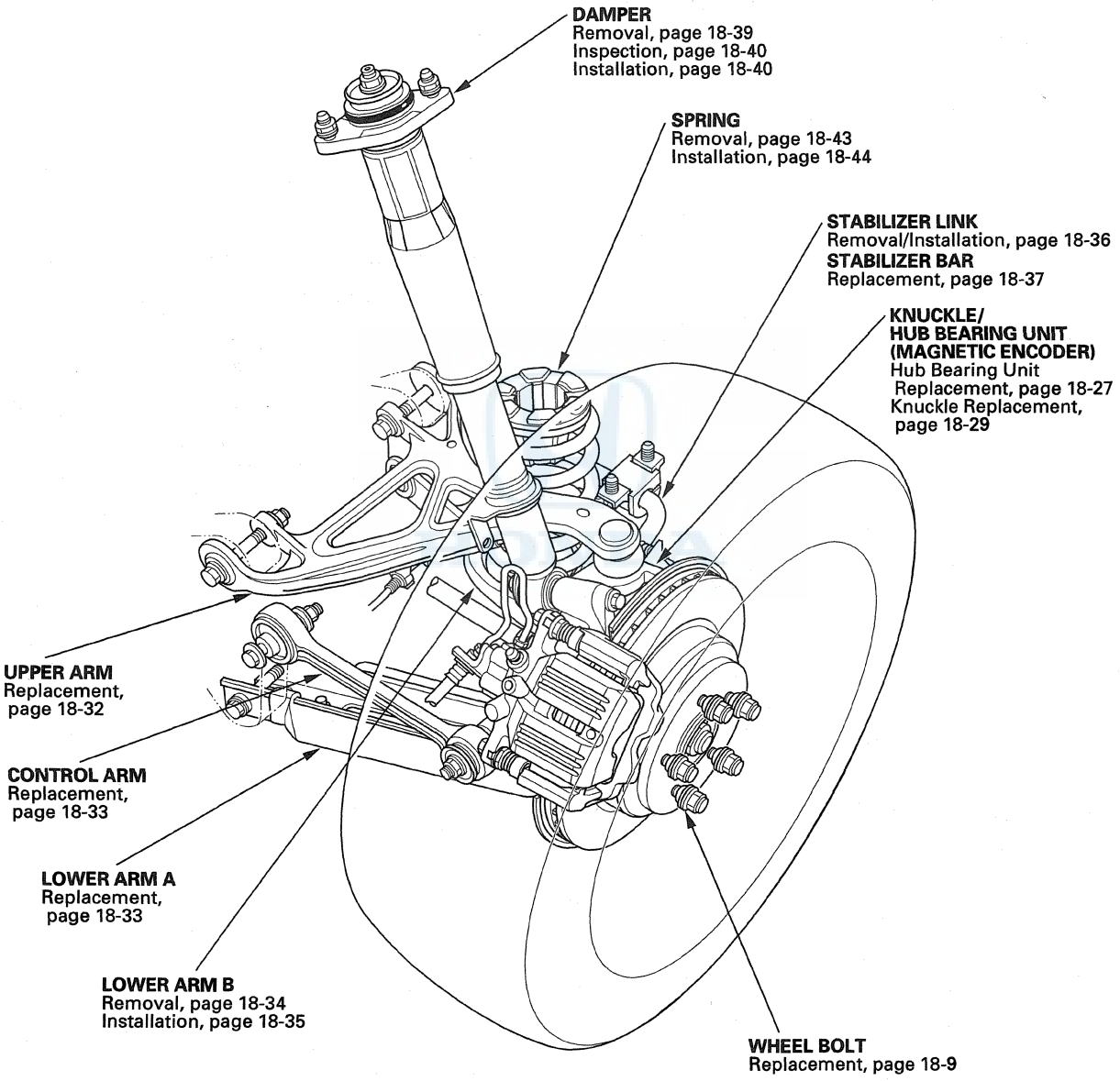

Wheel Alignment

NOTE: After adjusting the wheel alignment, do the VSA sensor neutral position memorization (see page 19-104).

The suspension can be adjusted for front and rear toe.

Pre-Alignment Checks

For proper inspection and adjustment of the wheel alignment, do these checks:

1. Release the parking brake to avoid an incorrect measurement.
2. Make sure the suspension is not modified.
3. Make sure the fuel tank is full, and that the spare tire, the jack, and the tools are in place on the vehicle.
4. Check the tire size and tire pressure.

   Tire size:
   Front/Rear: P245/45R18 96V

   Tire pressure (at cold):
   Front: 220 kPa (2.2 kgf/cm², 32 psi), cold
   Rear: 210 kPa (2.1 kgf/cm², 30 psi), cold

5. Check the runout of the wheels and tires (see page 18-8).
6. Check the suspension ball joints (Hold a tire with your hands, and move it up and down and right and left to check for movement).

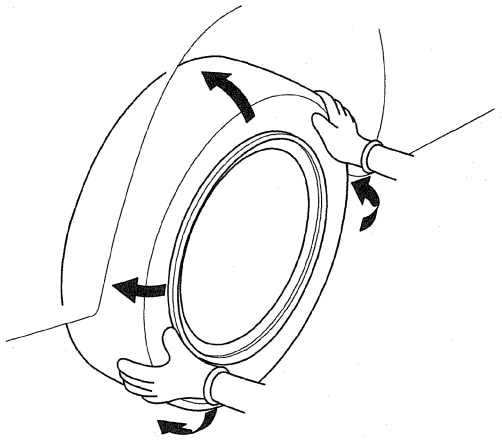

7. Before doing alignment inspections, be sure to remove all extra weight from the vehicle, and no one should be inside the vehicle (driver or passengers).
8. Bounce the vehicle up and down several times to stabilize the suspension.
9. Check that the steering column is set at the center tilt and telescopic position.

Caster Inspection

Use commercially available computerized four wheel alignment equipment to measure wheel alignment (caster, camber, toe, and turning angle). Follow the equipment manufacturer's instructions.

1. Check the caster angle.

   Caster angle: 2 °10 ′±30 ′
   (Maximum difference between the right and left side: 0 °30 ′)

   - If the measurement is within specifications, measure the camber angle.
   - If the measurement is not within specifications, check for bent or damaged suspension components.

(cont'd)

Wheel Alignment (cont'd)

Camber Inspection

Use commercially available computerized four wheel alignment equipment to measure wheel alignment (caster, camber, toe, and turning angle). Follow the equipment manufacturer's instructions.

1. Check the camber angle.

   Camber angle:
   Front: −0 °08 ′ ±30 ′
   Rear: −1 °15 ′ ±30 ′
   (Maximum difference between the right and left side: 0 °30 ′)

   - If the measurement is within specifications, measure the toe-in.
   - If the measurement is not within specifications, check for bent or damaged suspension components.

Front Toe Inspection/Adjustment

Use commercially available computerized four wheel alignment equipment to measure wheel alignment (caster, camber, toe, and turning angle). Follow the equipment manufacturer's instructions.

1. Center the steering wheel spokes.
2. Check the toe with the wheels pointed straight ahead.

   Front toe-in: 0±2 mm (0±0.08 in)

   - If adjustment is required, go to step 3.
   - If no adjustment is required, go to rear toe inspection/adjustment.

3. Loosen the tie-rod locknuts (A) while holding the flat surface sections (B) of the tie-rod end with a wrench, and turn both rack ends (C) until the front toe is within specifications.

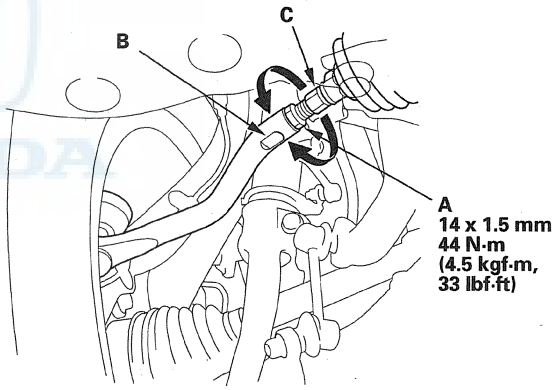

4. After adjusting, tighten the tie-rod locknuts to the specified torque. Reposition the rack-end boots if it is twisted or displaced.
5. Go to rear toe inspection/adjustment.

Rear Toe Inspection/Adjustment

Use commercially available computerized four wheel alignment equipment to measure wheel alignment (caster, camber, toe, and turning angle). Follow the equipment manufacturer's instructions.

1. Release the parking brake to avoid an incorrect measurement.

2. Check the toe.

   Rear toe-in: 2±2 mm (0.08±0.08 in)

   - If adjustment is required, go to step 3.
   - If no adjustment is required, go to turning angle inspection.

3. Hold the adjusting bolt (A) on the rear control arm (B), and loosen the self-locking nut (C).

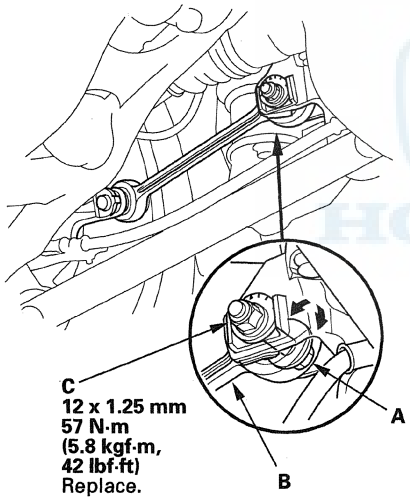

4. Replace the self-locking nut with a new one, and lightly tighten it.

   NOTE:
   - Always use a new self-locking nut whenever it has been tightened to the specified torque.
   - Assemble the adjusting bolt and cam-plate with the eccentric facing up.

5. Adjust the rear toe by turning the adjusting bolt until the toe is correct.

6. While holding the adjusting bolt, tighten the self-locking nut to the specified torque.

Turning Angle Inspection

Use commercially available computerized four wheel alignment equipment to measure wheel alignment (caster, camber, toe, and turning angle). Follow the equipment manufacturer's instructions.

1. Turn the wheel right and left while applying the brake, and measure the turning angle of both wheels.

   Turning angle:
   Inward: 37 °19 ′±2 °
   Outward: 30 °39 ′ (reference)

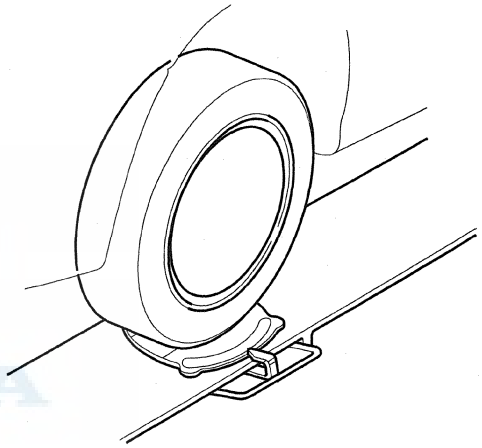

2. If the measurement is not within the specifications, even up both sides of the tie-rod threaded section length while adjusting the front toe. If it is correct, but the turning angle is not within the specifications, check for bent or damaged suspension components.

Wheel Bearing End Play Inspection

1. Raise the vehicle on a lift (see page 1-8).
2. Remove the wheel nuts, and the wheels, taking care not to scratch the caliper.
3. Install suitable flat washers (A) and the wheel nuts. Tighten the nuts to the specified torque to hold the brake disc securely against the hub.

Front

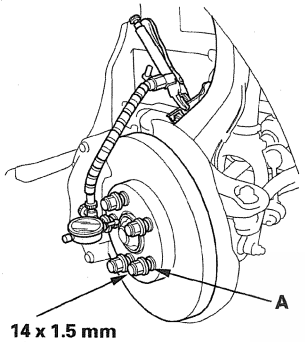

14 x 1.5 mm
127 N·m (13.0 kgf·m, 94.0 lbf·ft)

Rear

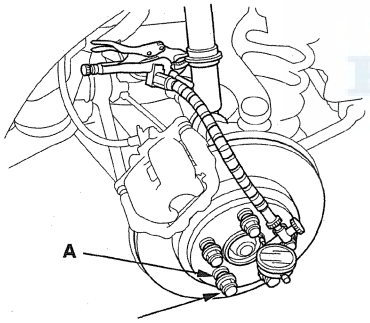

14 x 1.5 mm
127 N·m (13.0 kgf·m, 94.0 lbf·ft)

4. Attach the dial gauge. Place the dial gauge against the hub flange or hub cap.
5. Measure the bearing end play while moving the brake disc or the brake disc/drum inward and outward.

Front/Rear:
Standard: 0—0.05 mm (0—0.002 in)

6. If the bearing end play measurement is more than the standard, replace the wheel bearing or the hub bearing unit.

Wheel Runout Inspection

1. Raise the vehicle on a lift (see page 1-8).
2. Check for a bent or a deformed wheel.
3. Set up the dial gauge as shown, and measure the axial runout by rotating the wheel.

Front and rear wheel axial runout:
Standard: 0—0.7 mm (0—0.03 in)
Service limit: 2.0 mm (0.08 in)

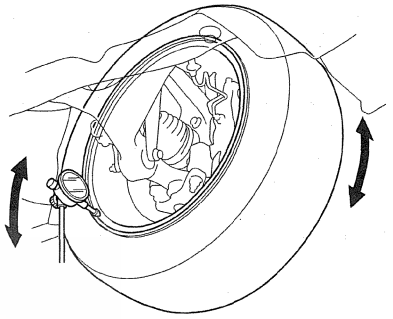

4. Reset the dial gauge to the position shown, and measure the radial runout.

Front and rear wheel radial runout:
Standard: 0—0.7 mm (0—0.03 in)
Service limit: 1.5 mm (0.06 in)

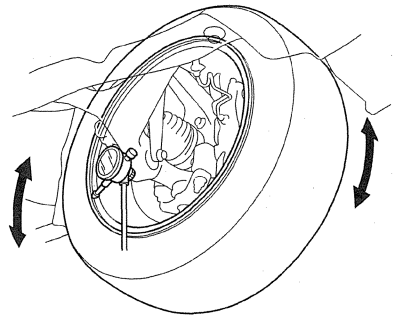

5. If the wheel runout is not within the specification, check the wheel bearing end play (see page 18-8), and make sure the mating surfaces on the brake disc and the inside of the wheel are clean.
6. If the bearing end play is within the specification (see page 18-8), but the wheel runout is more than the service limit, replace the wheel.

Wheel Bolt Replacement

Special Tools Required
Ball joint remover, 28 mm 07MAC-SL0A202

NOTICE

- Do not use a hammer, air, or electric impact tools to remove and install the wheel bolts.
- Be careful not to damage the threads of the wheel bolts.

1. Raise the vehicle on a lift (see page 1-8).

2. Remove the brake disc or disc/drum: front (see page 18-12), rear (see page 18-27).

3. Separate the wheel bolt (A) from the hub (B) using the ball joint remover (C), and keep the jaw (D) of ball joint remover vertical against the wheel bolt (see page 18-10).

   NOTE:
   - Adjust the jaws of the ball joint remover so that they are parallel to each other when applying pressure to the wheel bolt. With each adjustment, return the head (E) of the adjusting bolt (F) to the position shown before applying pressure.
   - Before installing the new wheel bolt, clean the mating surface on the bolt and the hub.

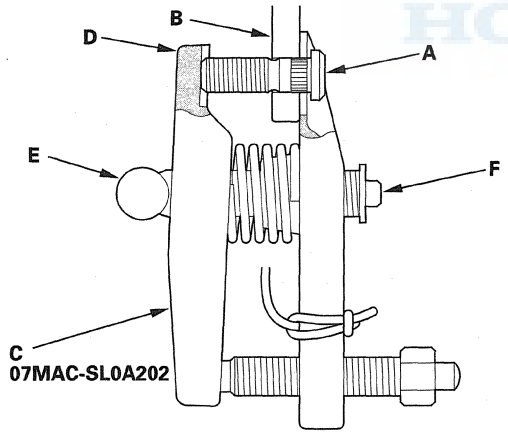

4. Insert the new wheel bolt (A) into the hub (B) while aligning the splined surfaces (C) on the hub hole with the wheel bolt. Adjust the measurement (D) with washers (P/N 94101-14800 or equivalent) (E), then install a nut (P/N 90304-SHJ-A91 or equivalent) (F) hand-tight.

   NOTE:
   - Degrease the area around the wheel bolt and the threaded section of the nut.
   - Make sure the wheel bolt is installed vertically in relation to the hub disc surface.
   - Do not install the nut and washers that have been used as tools on a vehicle.

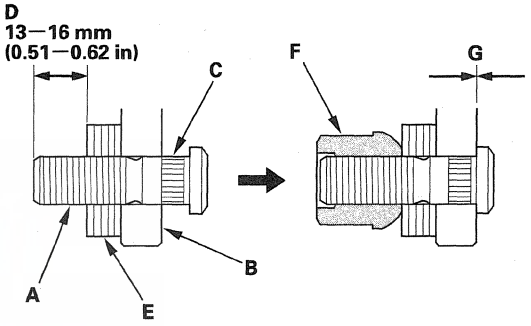

5. Tighten the nut until the wheel bolt is drawn fully into the hub. Do not exceed the maximum torque limit. Make sure there is no gap (G) between the bolt and the hub.

   Maximum torque limit:
   127 N·m (13.0 kgf·m, 94.0 lbf·ft) max.

6. Install the brake disc or disc/drum: front (see page 18-12), rear (see page 18-27).

   NOTE:
   - If you cannot tighten the wheel nut to the specified torque when installing the wheel, replace the hub bearing unit as an assembly.
   - Before installing the wheel, clean the mating surfaces of the brake disc and the inside of the wheel.

Ball Joint Removal

Special Tools Required
- Ball joint thread protector, 14 mm 07AAE-SJAA100
- Ball joint thread protector, 12 mm 07AAF-SDAA100
- Ball joint thread protector, 10 mm 07AAF-SECA120
- Ball joint remover, 32 mm 07MAC-SL0A102

NOTICE

Always use a ball joint remover to disconnect a ball joint. Do not strike the housing or any other part of the ball joint connection to disconnect it.

1. Install a hex nut (A) or the ball joint thread protector onto the threads of the ball joint (B).

   NOTE: Using a hex nut, make sure the nut is flush with the ball joint pin end to prevent damage to the threaded end of the ball joint pin.

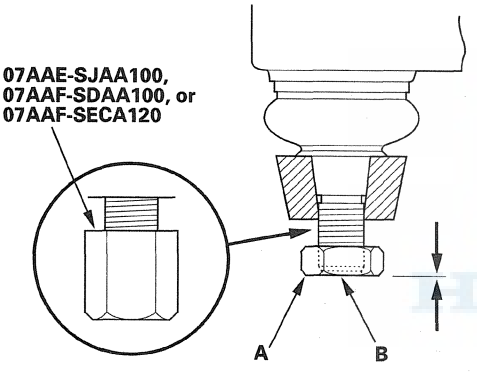

2. Apply grease to the ball joint remover on the areas shown (A). This will ease the installation of the tool, and prevent damage to the pressure bolt (B) threads.

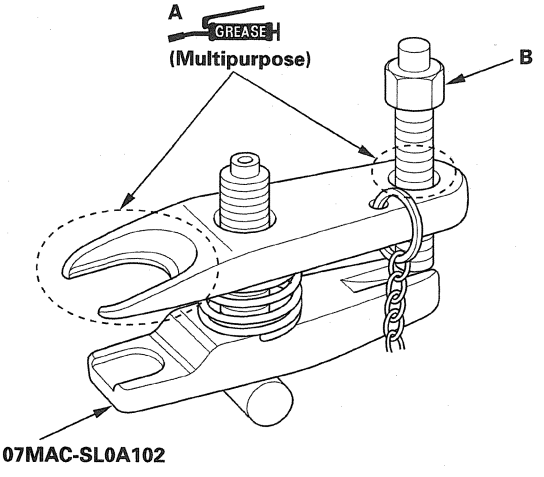

3. Loosen the pressure bolt (A), and install the ball joint remover as shown. Insert the jaws carefully, making sure not to damage the ball joint boot. Adjust the jaw spacing by turning the adjusting bolt (B).

   NOTE: Fasten the safety chain (C) securely to a suspension arm or the subframe (D). Do not fasten it to a brake line or wire harness.

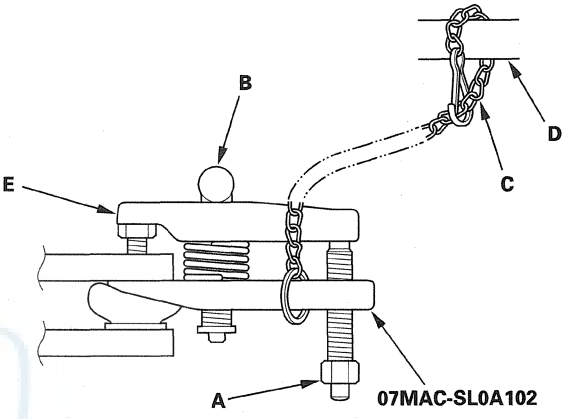

4. After adjusting the adjusting bolt, make sure the head of the adjusting bolt is in the position shown to allow the jaw (E) to pivot.

5. With a wrench, tighten the pressure bolt until the ball joint pin pops loose from the ball joint connecting hole. If necessary, apply penetrating type lubricant to loosen the ball joint pin.

   NOTE: Do not use pneumatic or electric tools on the pressure bolt.

6. Remove the ball joint remover, then remove the nut from the end of the ball joint pin, and pull the ball joint out of the ball joint connecting hole. Inspect the ball joint boot, and replace it if damaged.

Knuckle/Hub Bearing Unit Replacement

Exploded View

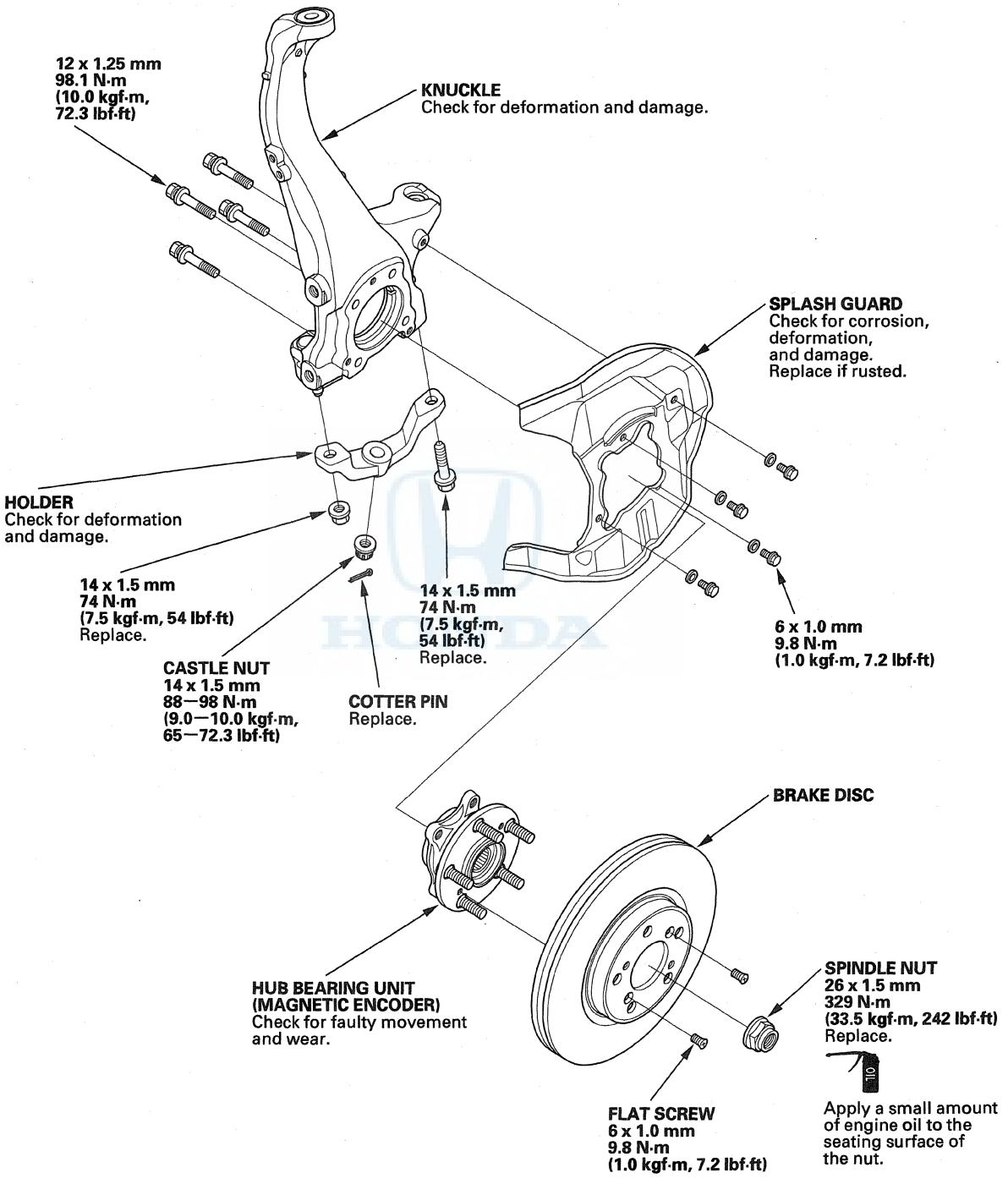

(cont'd)

Knuckle/Hub Bearing Unit Replacement (cont'd)

Special Tools Required
- Ball joint thread protector, 12 mm 07AAF-SDAA100
- Ball joint remover, 32 mm 07MAC-SL0A102

NOTICE

To avoid damage, do not strike aluminum parts with a metal hammer. If necessary, tap gently with a plastic-tipped hammer.

Hub Bearing Unit Replacement

1. Raise the vehicle on a lift (see page 1-8).
2. Remove the wheel nuts, and the front wheel, taking care not to scratch the caliper.

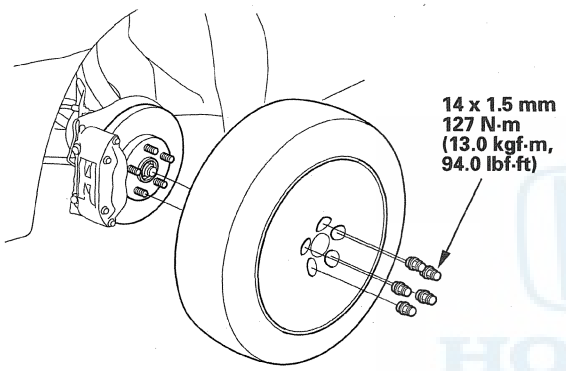

3. Remove the brake hose mounting bracket (A).

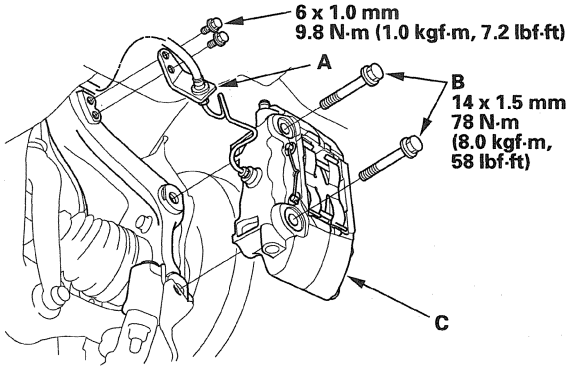

4. Remove the brake caliper bracket mounting bolts (B), and remove the caliper assembly (C) from the knuckle. To prevent damage to the caliper assembly or brake hose, use a short piece of wire to hang the caliper assembly from the undercarriage. Do not twist the brake hose with force.
5. Remove the wheel speed sensor (A) and the O-ring (B) from the knuckle. Do not disconnect the wheel sensor connector.

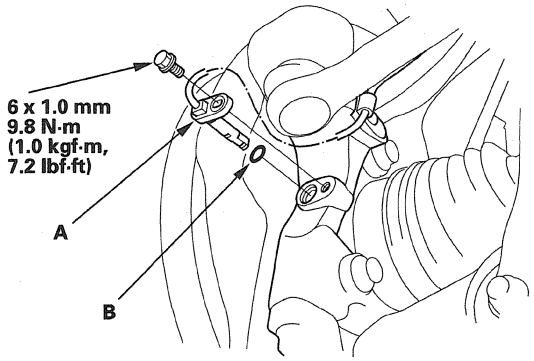

6. Raise the stake (A), then remove the spindle nut (B).

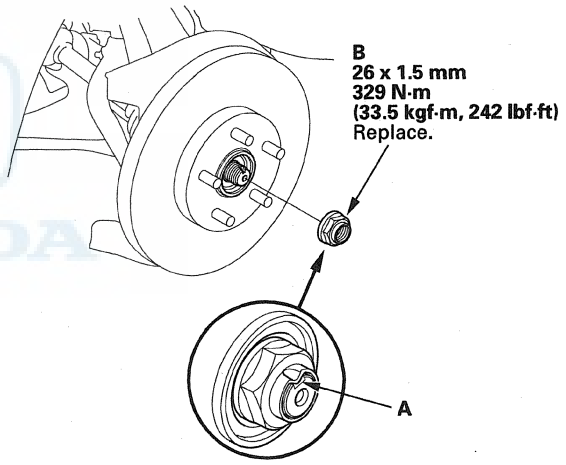

7. Remove the front brake disc (see page 19-17).

8. Remove the hub bearing unit mounting bolts (A).

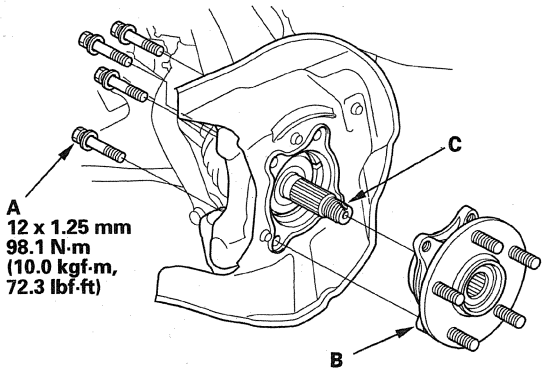

9. Remove the hub bearing unit (B) by tapping the driveshaft end (C) with a plastic hammer while drawing the hub bearing unit outward.

10. Install the hub bearing unit in the reverse order of removal, and note these items:

- Use a new spindle nut on reassembly.
- Before installing the spindle nut, apply a small amount of engine oil to the seating surface of the nut. After tightening, use a drift to stake the spindle nut shoulder against the driveshaft.
- Before installing the brake disc, clean the mating surfaces of the front hub bearing unit and the inside of the brake disc.
- Before installing the wheel, clean the mating surfaces of the brake disc and the inside of the wheel.

(cont'd)

Knuckle/Hub Bearing Unit Replacement (cont'd)

Knuckle Replacement

1. Remove the hub bearing unit.
2. Remove the splash guard (A).

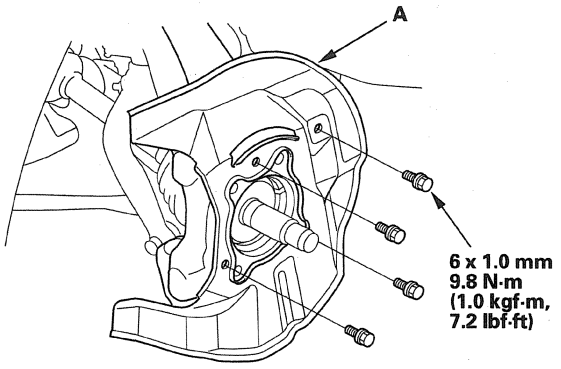

3. Remove the wheel speed sensor (A) from the knuckle. Do not disconnect the wheel speed sensor connector.

   NOTE: Use a new wheel speed sensor bracket (B) and new clips (C) on reassembly.

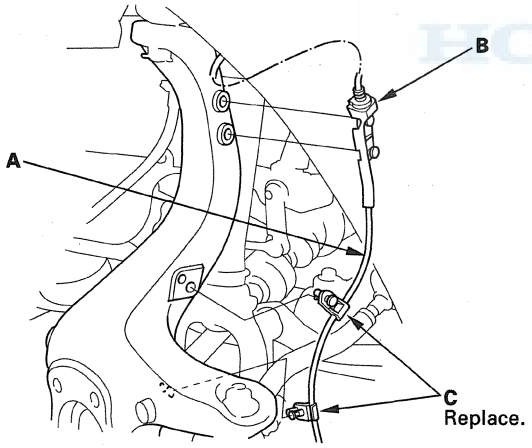

4. Remove the cotter pin (A) from the tie-rod end ball joint, then loosen the nut (B).

   NOTE: During installation, install the new cotter pin after tightening the nut, and bend its end as shown.

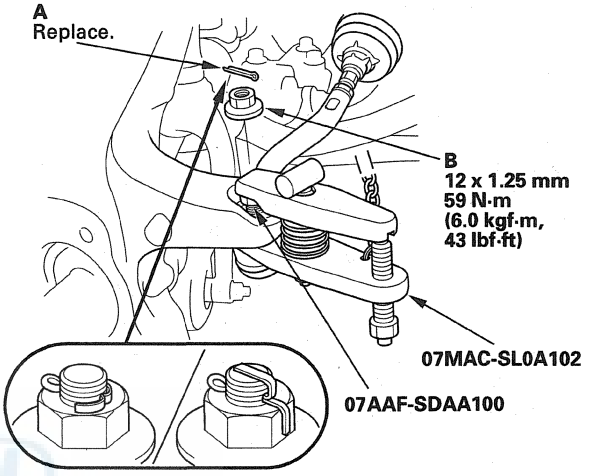

5. Disconnect the tie-rod end ball joint from the knuckle using the ball joint thread protector and the ball joint remover (see page 18-10).
6. Remove the holder (A) from the knuckle (B).

   NOTE: Use a new flange bolt and a self-locking nut during reassembly.

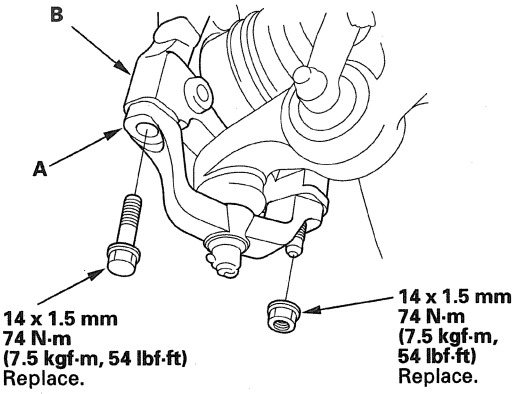

7. Remove the lock pin (A) from the upper arm ball joint, then remove the castle nut (B).

   NOTE: During installation, install the new lock pin as shown after tightening the nut.

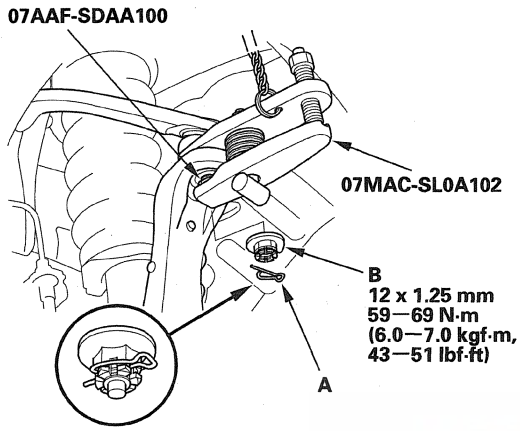

8. Disconnect the upper arm ball joint from the knuckle using the ball joint thread protector and the ball joint remover (see page 18-10), then remove the knuckle.

9. Install the knuckle in the reverse order of removal, and note these items:

   - First, install all the components, and lightly tighten the bolts and nuts, then raise the suspension to load it with the vehicle's weight before fully tightening to the specified torque.
   - Be careful not to damage the ball joint boot when connecting the upper arm to the knuckle.
   - Before connecting the ball joint to the knuckle, degrease the threaded section and the tapered portion of the ball joint pin, the connecting hole, and the threaded section and the mating surface of the castle nut.
   - Torque the castle nut to the lower torque specification, then tighten it only far enough to align the slot with the ball joint pin hole. Do not align the castle nut by loosening it.
   - Before installing the wheel, clean the mating surfaces on the brake disk and the inside of the wheel.
   - Check the wheel alignment, and adjust it if necessary (see page 18-5).

Ball Joint Boot Replacement

Special Tools Required
- Ball joint boot clip guide, 53 mm 070AG-SJA0200
- Ball joint boot clip guide, 51 mm 07MAG-SL00200

1. Remove the boot clip and the boot.

2. Pack the interior and lip (A) of a new boot with grease. Keep the grease off of the boot-to-knuckle mating surfaces (B).

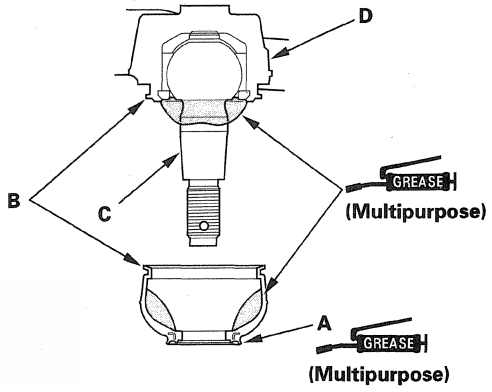

3. Wipe the grease off the tapered portion of the ball joint pin (C), and pack fresh grease into the base (D). Do not let dirt or other foreign materials get into the boot.

4. Install the boot on the ball joint, then squeeze it gently to force out any air.

5. Adjust the depth by turning the ball joint boot clip guide (A) until its base is just above the groove around the bottom of the boot. Then slide the clip (B) over the tool and into position on the boot.

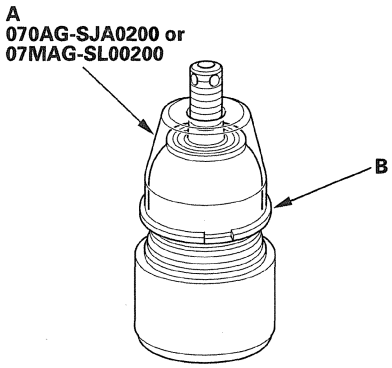

6. After installing the boot, wipe any grease off the exposed portion of the ball joint pin.

Upper Arm Replacement

Special Tools Required
- Ball joint thread protector, 12 mm 07AAF-SDAA100
- Ball joint remover, 32 mm 07MAC-SL0A102

1. Remove the front damper (see page 18-21).

2. Remove the wheel speed sensor bracket (A) from the upper arm (B).

   NOTE: Use a new wheel speed sensor bracket on reassembly.

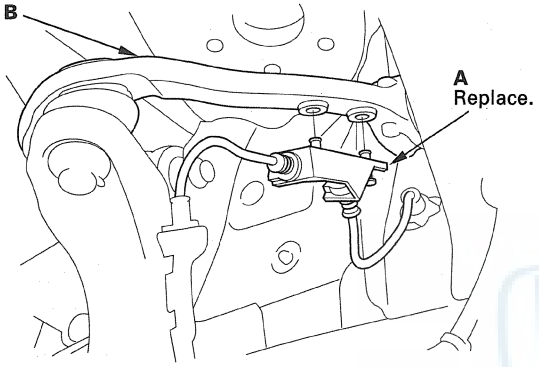

3. Remove the lock pin (A) from the upper arm ball joint, then loosen the nut (B).

   NOTE: During installation, install the new lock pin as shown after tightening the castle nut.

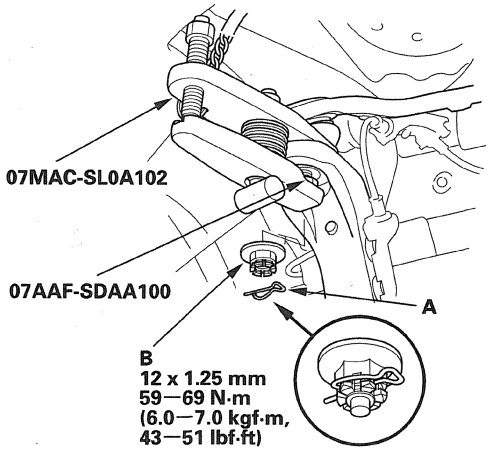

4. Disconnect the upper arm ball joint from the knuckle using the ball joint thread protector and the ball joint remover (see page 18-10).

5. Remove the upper arm mounting bolts (A), then remove the upper arm (B).

   NOTE: Use the new upper arm mounting bolts during reassembly.

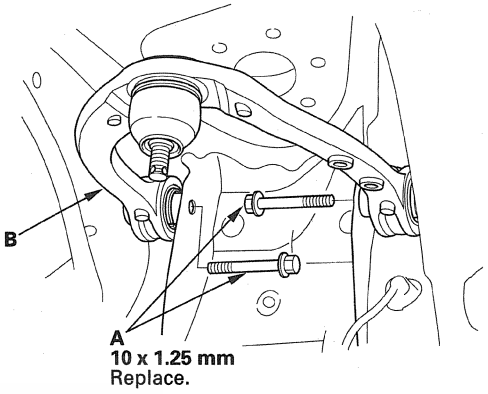

6. Install the upper arm by inserting a rod (A) of appropriate size (O.D. 6 mm/L: 300 mm) into the positioning holes (B), and place the upper arm (C) on the rod to position it before tightening the upper arm mounting bolts.

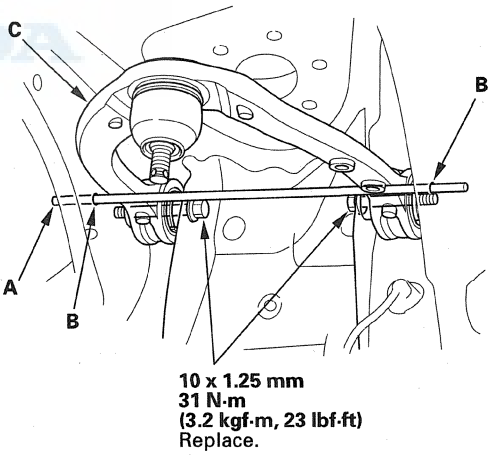

7. Install the remaining parts in the reverse order of removal, and note these items:

   - First install all the components, and lightly tighten the bolts and the nuts, then raise the suspension to load it with the vehicle's weight before fully tightening it to the specified torque. Do not place the jack against the ball joint pin of the knuckle.
   - Be careful not to damage the ball joint boot when installing the knuckle.
   - Before connecting the ball joint to the knuckle, degrease the threaded section and the tapered portion of the ball joint pin, the knuckle connecting hole, and the threaded section and the mating surface of the castle nut.
   - Torque the castle nut to the lower torque specification, then tighten it only far enough to align the slot with the ball joint pin hole. Do not align the castle nut by loosening it.
   - Before installing the wheel, clean the mating surfaces on the brake disc and the inside of the wheel.
   - Check the front wheel alignment, and adjust it if necessary (see page 18-5).

Special Tools Required
- Ball joint thread protector, 14 mm 07AAE-SJAA100
- Ball joint remover, 32 mm 07MAC-SL0A102

1. Raise the vehicle on a lift (see page 1-8).

2. Remove the wheel nuts, and the front wheels taking care not to scratch the caliper.

3. Remove the holder (A) from the knuckle (B).

   NOTE: Use a new flange bolt and a new self-locking nut during reassembly.

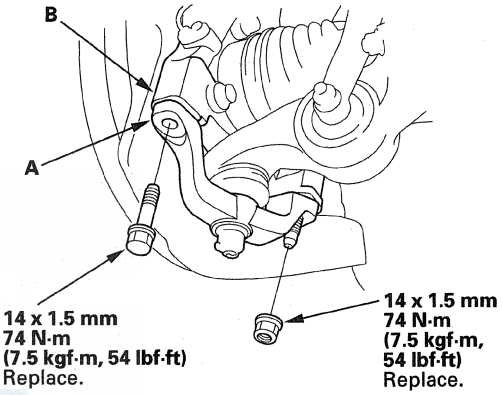

(cont'd)

Lower Arm Removal/Installation (cont'd)

4. Remove the cotter pin (A) from the lower ball joint castle nut (B), then remove the nut.

   NOTE:
   - To avoid damaging the ball joint, install a hex nut on the threads of the ball joint.
   - Be careful not to damage the ball joint boot when installing the remover.
   - Do not force or hammer on the lower arm, or pry between the lower arm and knuckle. You could damage the ball joint.
   - Insert a new cotter pin into the ball joint pin hole from the rear to the front of vehicle, and bend its end as shown.

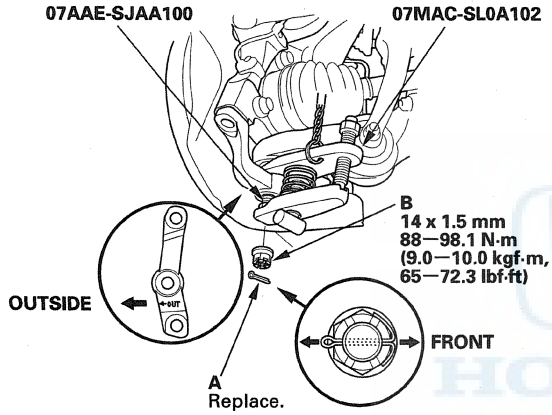

5. Disconnect the lower arm ball joint from the holder using the ball joint thread protector and the ball joint remover (see page 18-10).

6. Remove the self-locking nut (A) and the washer (B) (see page 18-19), then remove the damper fork mounting nut (C) and the bolt (D).

   NOTE: Use a new self-locking nut, a new damper fork mounting nut and a new bolt during reassembly.

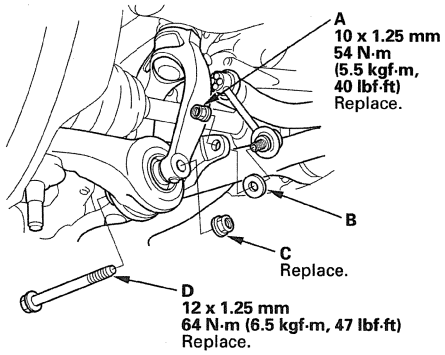

7. Remove the flange bolts (A) and the self-locking nut (B), then remove the lower arm (C).

   NOTE: Use a new flange bolts and a new self-locking nut during reassembly.

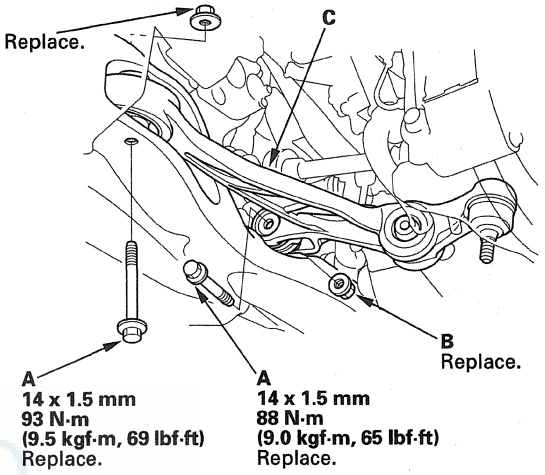

8. In case of a loose lower arm bracket (A), follow the steps to retighten its bolts:

   1. Lightly tighten the new three bolts.
   2. Align the center of the cam (B) to the edge (C).
   3. Tighten the adjusting bolt (D).
   4. Tighten the lower arm bracket mounting bolt (E).
   5. Tighten the lower arm bracket mounting bolt (F).

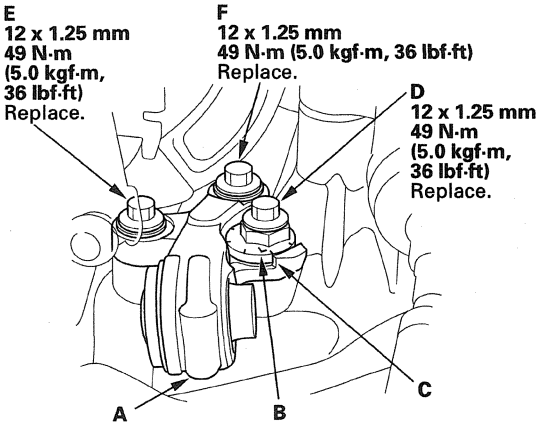

9. Install the lower arm in the reverse order of removal, and note these items:

   - First install all the components, and lightly tighten the bolts and the nuts, then raise the suspension to load it with the vehicle's weight before fully tightening it to the specified torque. Do not place the jack against the ball joint pin of the knuckle.
   - Be careful not to damage the ball joint boot when installing the knuckle.
   - Before connecting the lower ball joint to the holder, degrease the threaded section and the tapered portion of the ball joint pin, the holder connecting hole, the threaded section and the mating surface of the castle nut.
   - Torque the castle nut to the lower torque specification, then tighten it only far enough to align the slot with the ball joint pin hole. Do not align the castle nut by loosening it.
   - Install a new cotter pin on the castle nut after torquing.
   - Before installing the wheel, clean the mating surfaces of the brake disc and the inside of the wheel.
   - Check the wheel alignment, and adjust it if necessary (see page 18-5).

Stabilizer Link Removal/Installation

1. Raise the vehicle on a lift (see page 1-8).
2. Remove the wheel nuts, and the front wheels, taking care not to scratch the caliper.
3. Remove the self-locking nuts (A) while holding the respective joint pin (B) with a hex wrench (C), and remove the washer (D) and the stabilizer link (E).

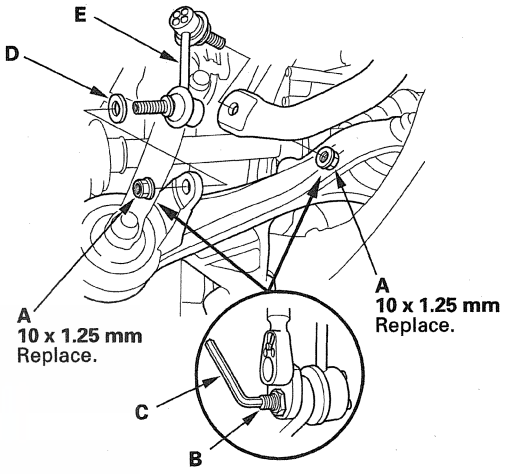

4. Place the floor jack under the lower arm, and raise the suspension.

NOTICE

Do not place the jack against the knuckle.

(cont'd)

Stabilizer Link Removal/Installation (cont'd)

5. Install the stabilizer link (A) on the stabilizer bar (B) and the lower arm (C) with the joint pins set at the center of their range of movement.

   NOTE: The paint mark (D) on the stabilizer link is near the upper end of the stabilizer link.

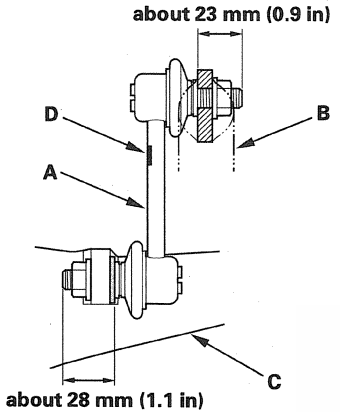

6. Install the washer and the new self-locking nuts (A), and lightly tighten them.

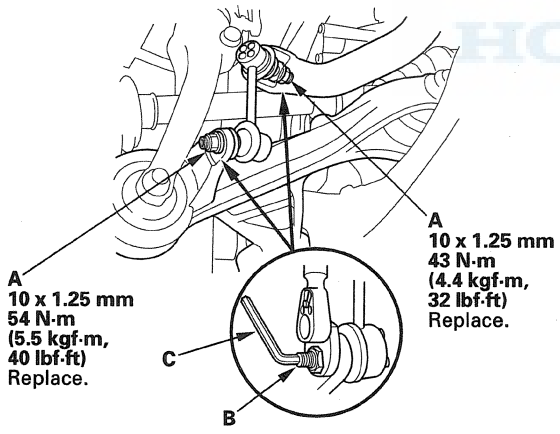

7. Tighten the new self-locking nuts (A) to the specified torque while holding the respective joint pin (B) with a hex wrench (C).

8. Clean the mating surface of the brake disc and the inside of the wheel, then install the front wheel.

9. Test-drive the vehicle.

10. After 5 minutes of driving, tighten the self-locking nuts again to the specified torque.

Stabilizer Bar Replacement

1. Raise the vehicle on a lift (see page 1-8).

2. Remove the wheel nuts, and the front wheels, taking care not to scratch the caliper.

3. Disconnect the stabilizer links from the stabilizer bar on the right and left sides (see page 18-19).

4. Remove the front suspension subframe from the body (see page 20-190).

5. Remove the flange bolts (A) and the bushing holders (B), then remove the bushings (C) and the stabilizer bar (D).

   NOTE: Use new flange bolts during reassembly.

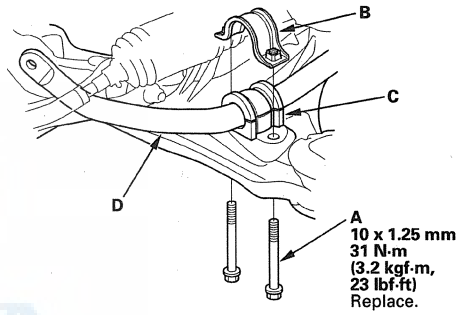

6. Install the stabilizer bar in the reverse order of removal, and note these items:

   - Note the right and left direction of the stabilizer bar.
   - Align the ends of the paint marks (A) on the stabilizer bar with each end of the bushings (B).
   - Note the fore/aft direction of the bushing holders.
   - Refer to Stabilizer Link Replacement to connect the stabilizer bar to the links (see page 18-19).
   - Clean the mating surface of the brake disc and the inside of wheel, then install the front wheel.
   - Check the wheel alignment, and adjust it if necessary (see page 18-5).

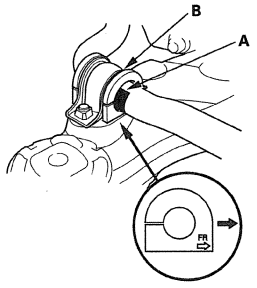

Damper/Spring Removal/Installation

Removal

1. Remove the upper fender trims (A) and left upper trim (B) (see page 20-162).

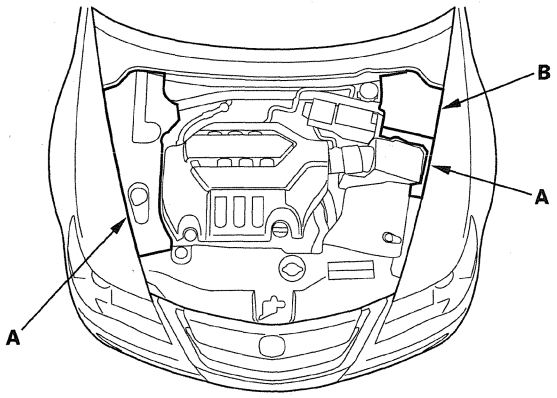

2. Raise the vehicle on a lift (see page 1-8).

3. Remove the front wheel, taking care not to scratch the caliper.

4. Remove the damper fork (A) from the damper (B) and the lower arm (C) while pushing the lower arm down.

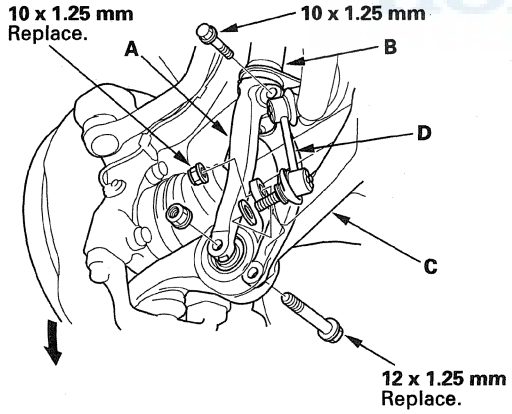

5. Disconnect the stabilizer link (D) from the lower arm (see page 18-19).

6. Remove the 8 mm flange nuts (A) and the 10 mm flange nuts (B) from the top of the damper.

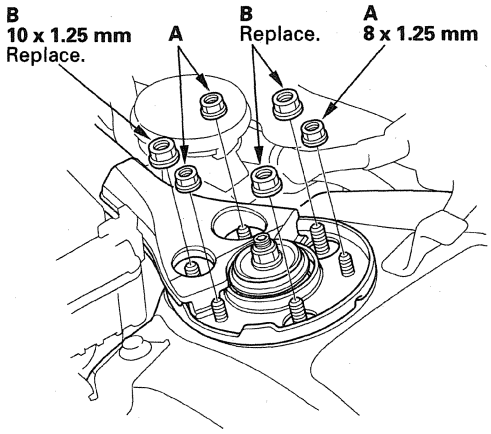

7. Remove the damper assembly (A).

NOTE:
- Before removing the damper assembly, make a space to remove the damper assembly by rotating the steering wheel clockwise until it stops.
- Be careful not to damage or scratch the aluminum parts. It may weaken the suspension.

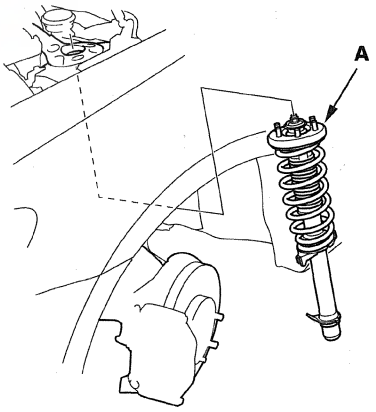

(cont'd)

Damper/Spring Removal/Installation (cont'd)

Installation

1. Position the damper assembly (A) in the body with the aligning tab (B) facing inside.

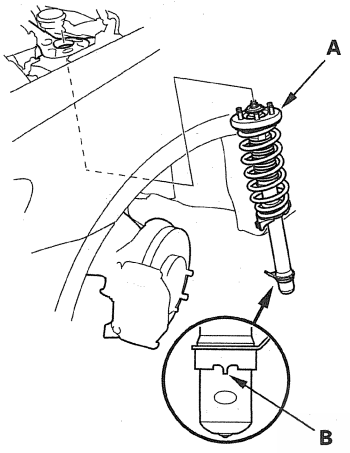

2. Loosely install the 8 mm flange nuts (A) and the 10 mm new flange nuts (B) on the top of the damper.

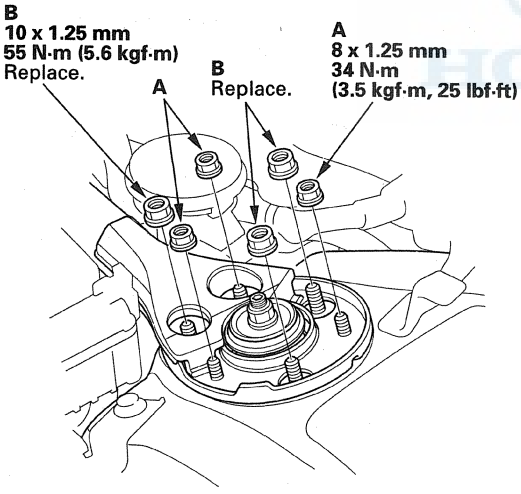

3. Install the damper fork (A) over the driveshaft and onto the lower arm while pushing the lower arm down. Install the front damper in the damper fork so that the aligning tab (B) is aligned with the slot (C) in the damper fork.

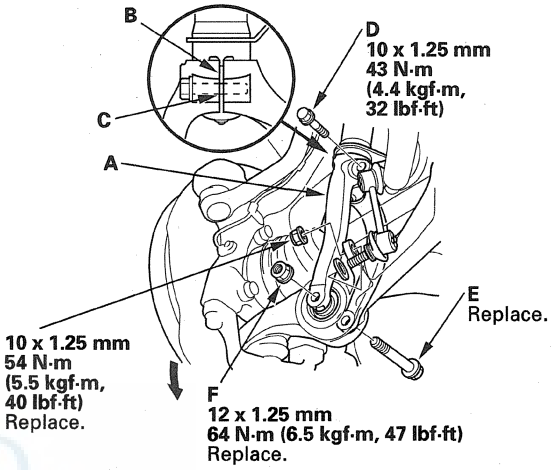

4. Loosely install the damper pinch bolt (D) into the damper fork.
5. Install the new flange bolt (E) to the damper fork and lower arm, then lightly tighten the new damper fork mounting nut (F).
6. Install the stabilizer link on the lower arm with the washer and the new self-locking nut, and lightly tighten them.
7. Place the floor jack under the lower arm, and raise the suspension to load it with the vehicle's weight.
8. Tighten the flange nuts on the top of the damper to the specified torque.
9. Tighten the damper pinch bolt, the flange nut on the damper fork, and the self-locking nut to the specified torque.
10. Clean the mating surfaces of the brake disc and the inside of the wheel, then install the front wheel.
11. Install the upper fender trims (see page 20-162).

Damper/Spring Disassembly, Inspection, and Reassembly

Exploded View

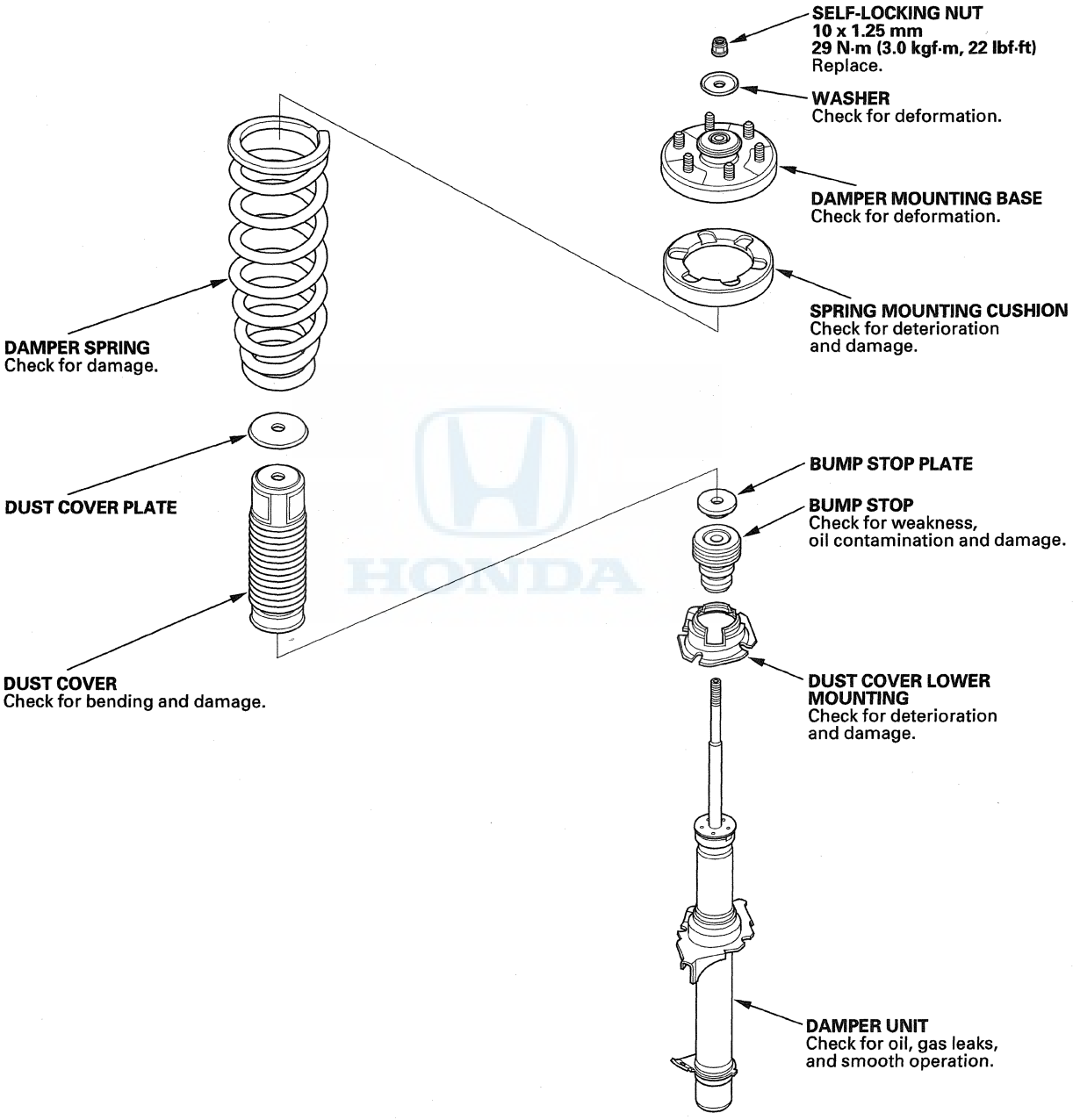

(cont'd)

Damper/Spring Disassembly, Inspection, and Reassembly (cont'd)

Disassembly/Inspection

NOTE: When compressing the damper spring, use a commercially available strut spring compressor (Branick MST-580A or Model 7200, or equivalent). According to the manufacturer's instructions.

1. Compress the damper spring, then remove the self-locking nut (A) while holding the damper shaft with a hex wrench (B). Do not compress the damper spring more than is necessary to remove the self-locking nut.

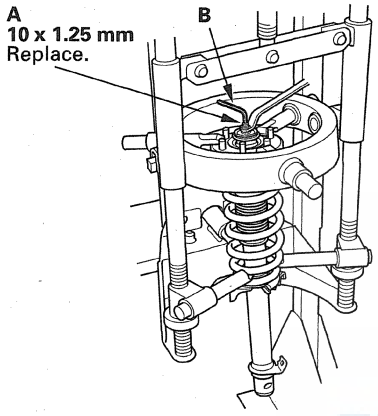

2. Release the pressure from the strut spring compressor, then disassemble the damper as shown in the Exploded View.

3. Reassemble all the parts, except for the spring mounting cushion and spring.

4. Compress the damper assembly by hand, and check for smooth operation through a full stroke, both compression and extension. The damper should extend smoothly and constantly when compression is released. If it does not, the gas is leaking and the damper should be replaced.

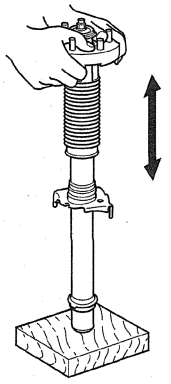

5. Check for oil leaks, abnormal noises, and binding during these tests.

Reassembly

NOTE: Refer to the Exploded View as needed.

1. Align the damper mounting base (A) and spring mounting cushion (B) as shown, then reassemble the damper except for the washer and self-locking nut.

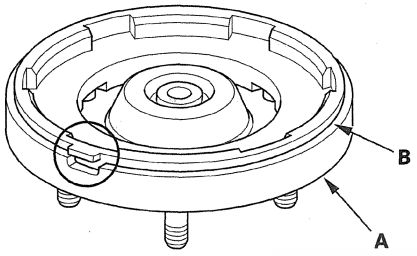

2. Install the damper assembly on a commercially available strut spring compressor (A), and compress the spring lightly.

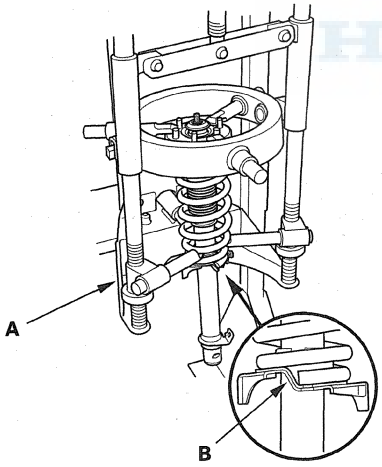

3. Align the bottom of the spring and the stepped part (B) of the lower spring seat.

4. Position the damper mounting base (A) so the stud bolt (B) is aligned with the aligning tab (C) in the damper unit as shown.

LEFT: **RIGHT:**

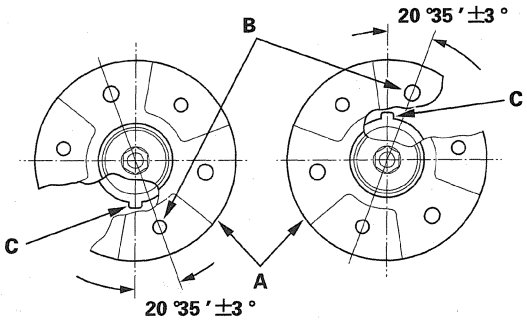

5. Compress the damper spring. Do not compress the spring excessively.

6. Install the washer (A) and a new 10 mm self-locking nut (B). Hold the damper shaft with a hex wrench (C), and tighten the 10 mm self-locking nut to the specified torque.

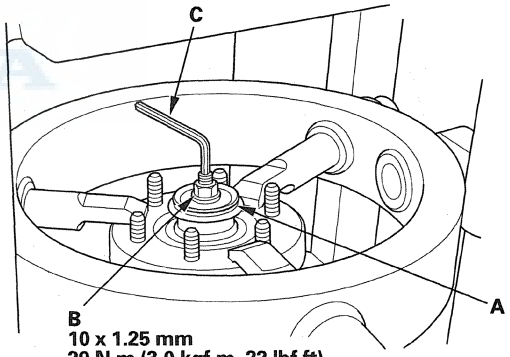

7. Remove the damper assembly from the strut spring compressor.

Knuckle/Hub Bearing Unit Replacement

Exploded View

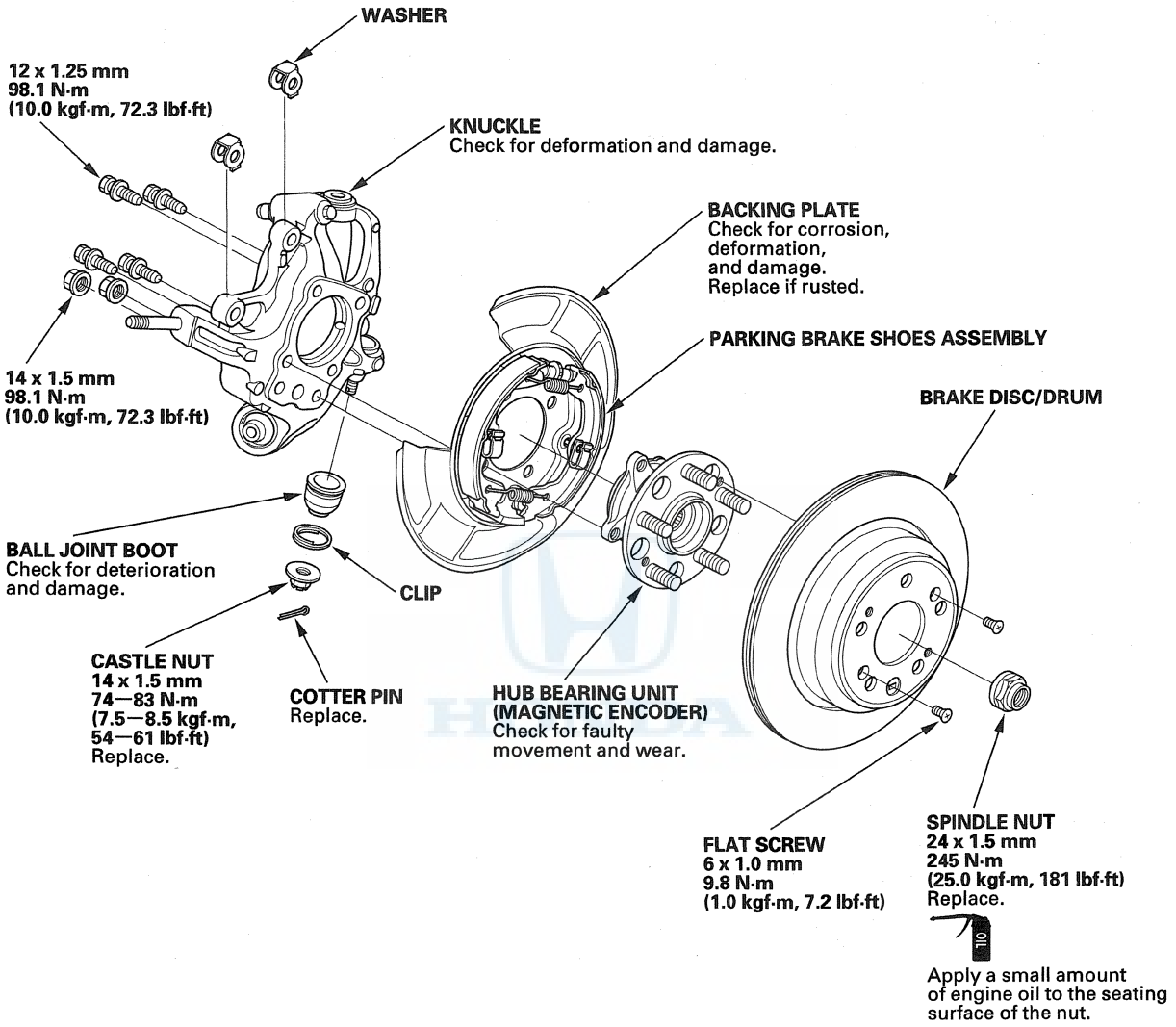

Special Tools Required
- Ball joint thread protector, 14 mm 07AAE-SJAA100
- Ball joint thread protector, 12 mm 07AAF-SDAA100
- Ball joint remover, 32 mm 07MAC-SL0A102

Hub Bearing Unit Replacement

1. Raise the vehicle on a lift (see page 1-8).

2. Remove the wheel nuts, and the rear wheel.

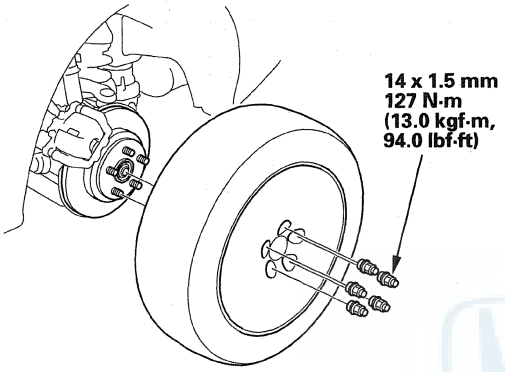

3. Remove the brake caliper bracket mounting bolts (A), and remove the caliper assembly (B) from the knuckle. To prevent damage to the caliper assembly or brake hose, use a short piece of wire to hang the caliper assembly from the undercarriage. Do not twist the brake hose excessively.

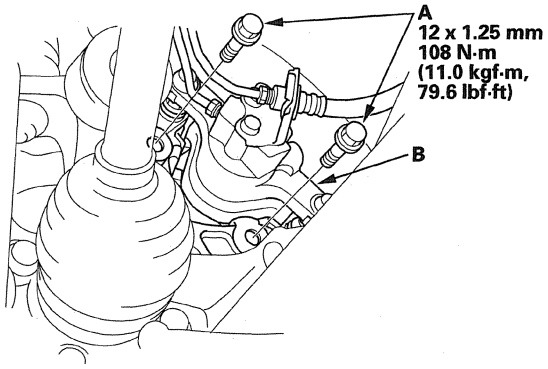

4. Remove the two washers (A).

   NOTE: During installation, make sure the washers are installed between the brake caliper bracket and the knuckle.

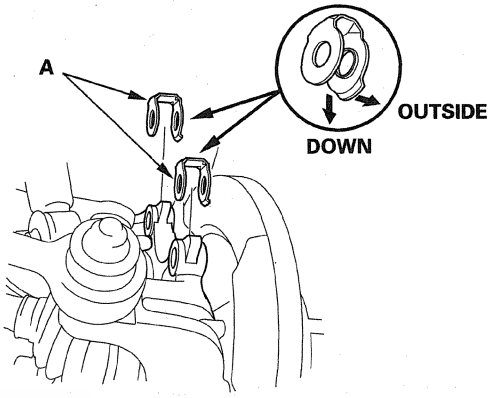

5. Remove the wheel speed sensor (A) and the O-ring (B) from the knuckle. Do not disconnect the wheel speed sensor connector.

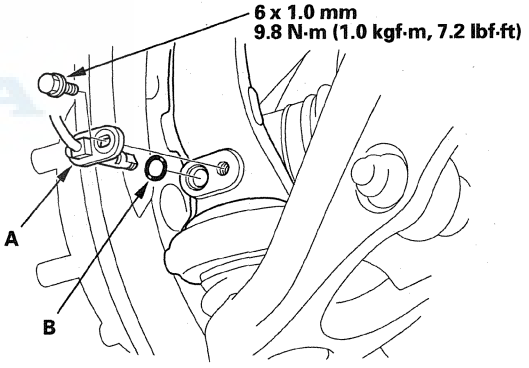

(cont'd)

Knuckle/Hub Bearing Unit Replacement (cont'd)

6. Raise the stake (A), and remove the spindle nut (B).

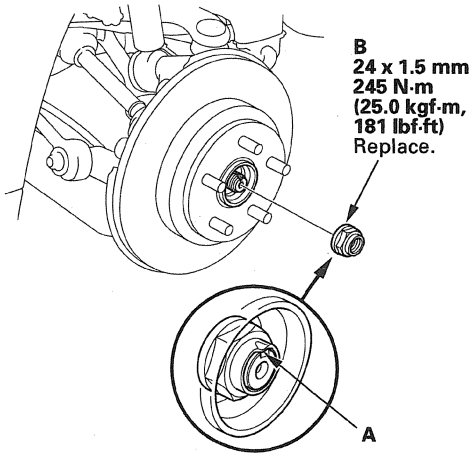

7. Remove the brake disc/drum (see page 19-29).

8. Remove the hub bearing unit (A).

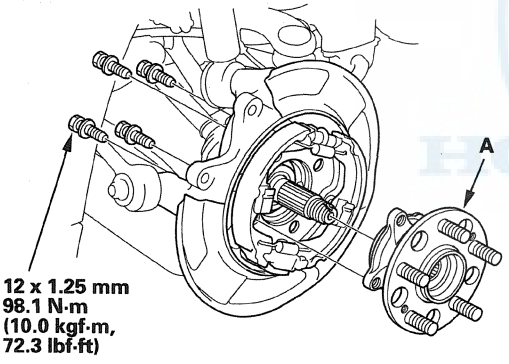

9. Install the hub bearing unit in the reverse order of removal, and note these items:

- Tighten all mounting hardware to the specified torque.
- Use a new spindle nut on reassembly.
- Before installing the spindle nut, apply a small amount of engine oil to the seating surface of the nut. After tightening, use a drift to stake the spindle nut shoulder against the driveshaft.
- Before installing the brake disc/drum, clean the mating surfaces of the hub bearing unit and the inside of the brake disc/drum.
- Before installing the wheel, clean the mating surfaces of the brake disc/drum and the inside of the wheel.
- Check the wheel alignment, and adjust it if necessary (see page 18-5).

Knuckle Replacement

1. Remove the hub bearing unit (see page 18-12).

2. Remove the lower arm A mounting nut (B), the washers (C), and the mounting bolt (D) from the knuckle side.

   NOTE: Use new lower arm A mounting nuts and new bolts during reassembly.

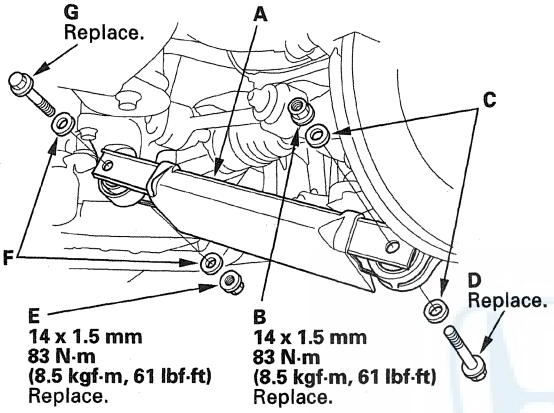

3. Remove the self-locking nut (E), the washers (F), and the flange bolt (G), then remove the lower arm A.

4. Remove the backing plate mounting nuts (A), then remove the backing plate (B). To prevent damage to the backing plate or parking brake shoes assembly and cable, use a short piece of wire to hang the backing plate from the undercarriage. Do not twist the parking brake cable with force.

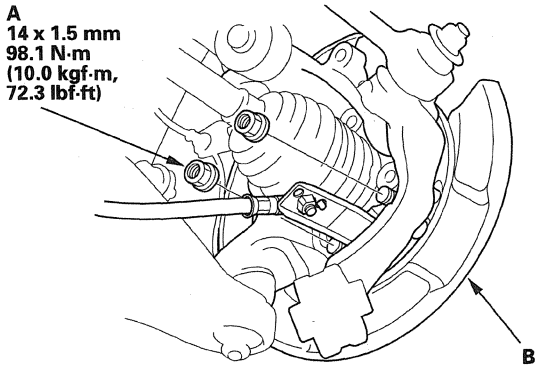

5. Remove the wheel speed sensor bracket (A) from the knuckle. Do not disconnect the wheel speed sensor connector.

   NOTE: Use a new wheel speed sensor bracket on reassembly.

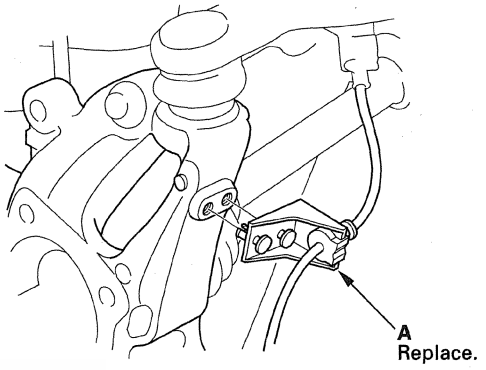

6. Remove the lock pin (A) from the upper arm ball joint, then loosen the nut (B).

   NOTE: During installation, install the lock pin as shown after tightening a new castle nut.

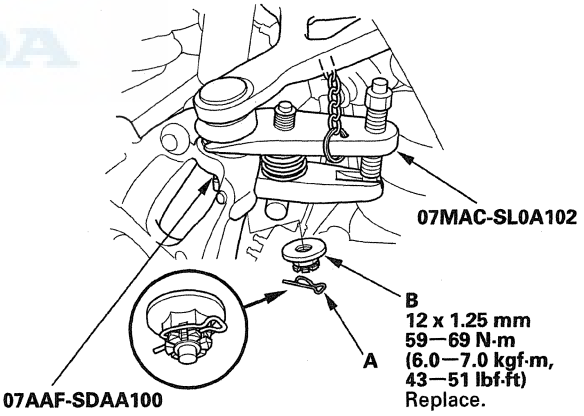

7. Disconnect the upper arm ball joint from the knuckle using the ball joint thread protector and the ball joint remover (see page 18-10).

(cont'd)

Knuckle/Hub Bearing Unit Replacement (cont'd)

8. Remove the self-locking nut (A) and the washer (C), then disconnect the stabilize link (D) from lower arm B (see page 18-36).

   NOTE: Use a new self-locking nut during reassembly.

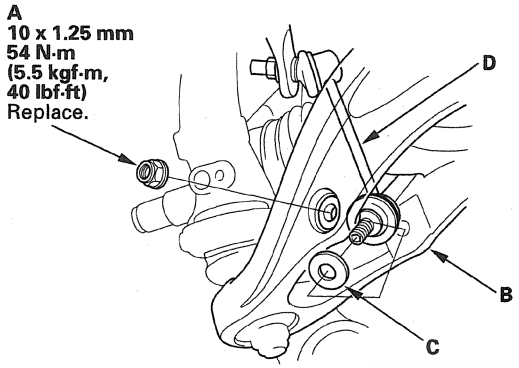

9. Remove the damper lower mounting bolt (A), and disconnect the damper (B) from the knuckle.

   NOTE: Use a new damper lower mounting bolt during reassembly.

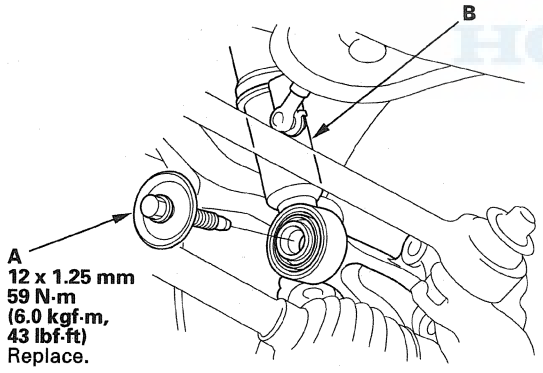

10. Place a floor jack at the connecting point of lower arm B and the stabilizer link.

11. Remove the cotter pin (A) from the lower arm B ball joint, and loosen the nut (C).

    NOTE:
    - Use the new castle nut during reassembly.
    - During installation, insert the new cotter pin into the ball joint pin hole from the rear to the front of vehicle, and bend its end as shown. Check the ball joint pin hole direction before connecting the ball joint.

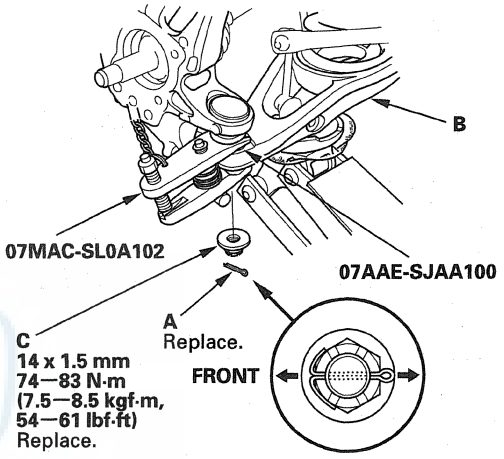

12. Disconnect the knuckle ball joint from the lower arm B using the ball joint thread protector and the ball joint remover (see page 18-10).

13. Remove the control arm mounting nut (A) and the washer (B) from the knuckle (C), then remove the knuckle.

    NOTE: Use a new control arm mounting nut during reassembly.

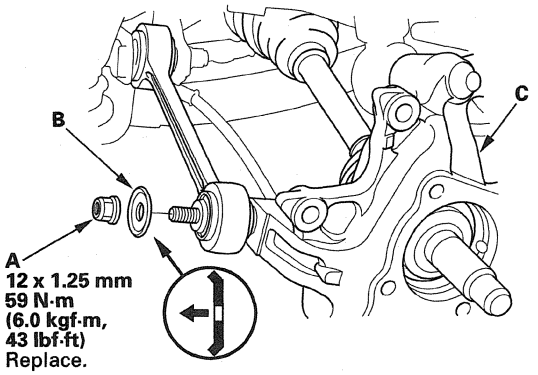

14. Install the knuckle in the reverse order of removal, and note these items:

- First install all the components and lightly tighten the bolts and nuts, then raise the suspension to load it with the vehicle's weight before fully tightening to the specified torque.
- Before connecting the ball joint to the knuckle and the lower arm B, degrease the threaded section and the tapered portion of the ball joint pin, the connecting hole, and the threaded section and the mating surface of the castle nut.
- Be careful not to damage the ball joint boot when connecting the knuckle to the lower arm B and the upper arm to the knuckle.
- Torque the castle nut to the lower torque specification, then tighten it only far enough to align the slot with the ball joint pin hole. Do not align the castle nut by loosening it.
- Before installing the wheel, clean the mating surfaces on the brake disc/drum and the inside of the wheel.
- Check the wheel alignment, and adjust it if necessary (see page 18-5).

Ball Joint Boot Replacement

Special Tools Required
- Ball joint boot clip guide, 45 mm 070AG-SJA0300
- Ball joint boot clip guide, 51 mm 07MAG-SL00200

1. Remove the boot clip and the boot.

2. Pack the interior and lip (A) of a new boot with grease. Keep the grease off of the boot-to-knuckle mating surfaces (B).

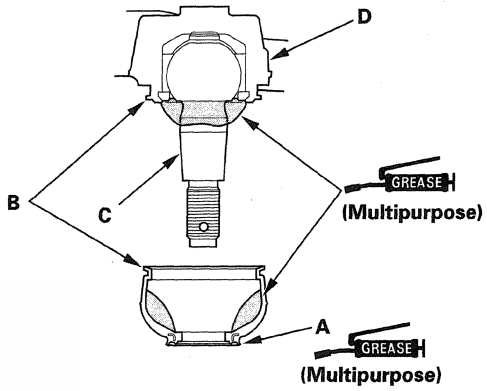

3. Wipe the grease off the tapered portion of the pin (C), and pack fresh grease into the base (D). Do not let dirt or other foreign materials get into the boot.

4. Install the boot on the ball joint, then squeeze it gently to force out any air.

5. Adjust the depth by turning the special tool (A) until its base is just above the groove around the bottom of the boot. Then slide the clip (B) over the tool, and into position on the boot.

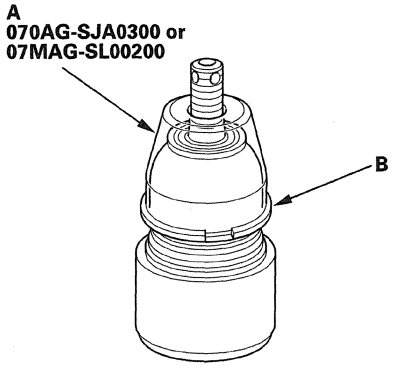

6. After installing the boot, wipe any grease off the exposed portion of the ball joint pin.

Upper Arm Replacement

Special Tools Required
- Ball joint thread protector, 12 mm 07AAF-SDAA100
- Ball joint remover, 32 mm 07MAC-SL0A102

1. Raise the vehicle on a lift (see page 1-8).
2. Remove the wheel nuts, and the rear wheel.
3. Place a floor jack under the trailing arm, and support the suspension.
4. Remove the wheel speed sensor bracket (A) from the upper arm (B).

   NOTE: Use a new wheel speed sensor bracket on reassembly.

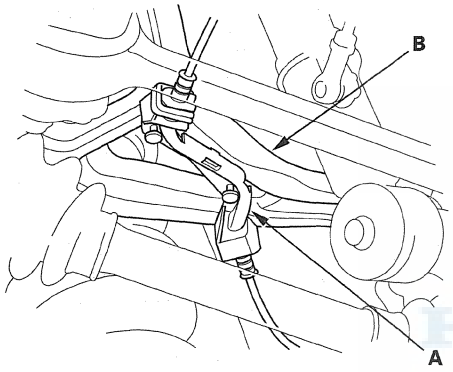

5. Remove the lock pin (A) from the upper arm ball joint, then remove the castle nut (B).

   NOTE: During installation, install the lock pin as shown after tightening the new castle nut.

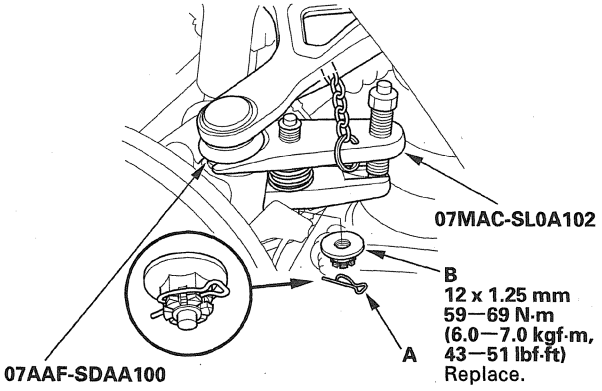

6. Disconnect the upper arm ball joint from the knuckle using the ball joint thread protector and the ball joint remover (see page 18-10).
7. Remove the flange bolts (A) and the self-locking nuts (B), then remove the upper arm (C).

   NOTE: Use new flange bolts and new self-locking nuts during reassembly.

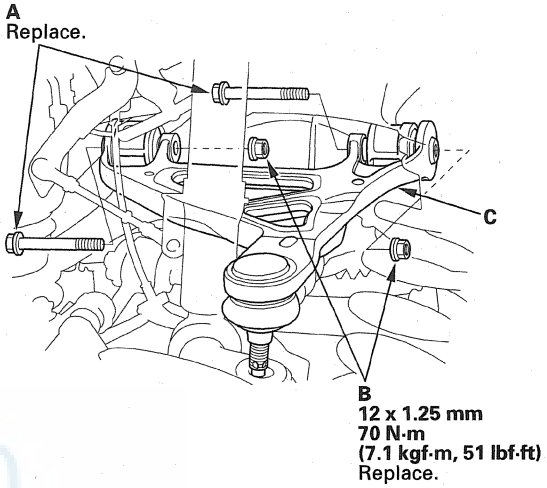

8. Install the upper arm in the reverse order of removal, and note these items:
   - First install all of the components, and lightly tighten the bolts and nuts, then raise the suspension to load it with the vehicle's weight before fully tightening to the specified torque.
   - Be careful not to damage the ball joint boot when installing the knuckle.
   - Before connecting the ball joint to the knuckle, degrease the threaded section and the tapered portion of the ball joint pin, the connecting hole, and the threaded section and the mating surface of the castle nut.
   - Torque the castle nut to the lower torque specification, then tighten it only far enough to align the slot with the ball joint pin hole. Do not align the castle nut by loosening it.
   - Before installing the wheel, clean the mating surfaces of the brake disc/drum and the inside of the wheel.
9. Check the wheel alignment, and adjust it if necessary (see page 18-5).

Lower Arm A Replacement

1. Raise the vehicle on a lift (see page 1-8).
2. Remove the wheel nuts, and the rear wheel.
3. Remove the lower arm A mounting nut (B), the washers (C) and the mounting bolt (D) from the knuckle side.

   NOTE: Use new lower arm A mounting nuts and bolts during reassembly.

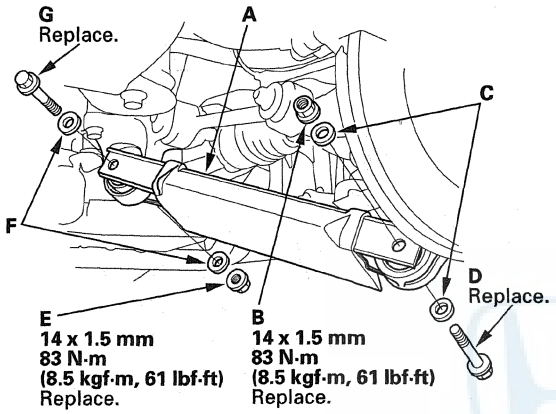

4. Remove the self-locking nut (E), the washers (F), and the flange bolt (G), then remove the lower arm A.
5. Install the lower arm A in the reverse order of removal, and note these items:

   - First install all of the components, and lightly tighten the bolts and nuts, then raise the suspension to load it with the vehicle's weight before fully tightening to the specified torque.
   - Before installing the wheel, clean the mating surfaces on the brake disc/drum and the inside of the wheel.
   - Check the wheel alignment, and adjust it if necessary (see page 18-5).

Control Arm Replacement

1. Raise the vehicle on a lift (see page 1-8).
2. Remove the wheel nuts, and the rear wheel.
3. Remove the control arm mounting nut (A) and the washer (B) from the knuckle side.

   NOTE: Use a new control arm mounting nut during reassembly.

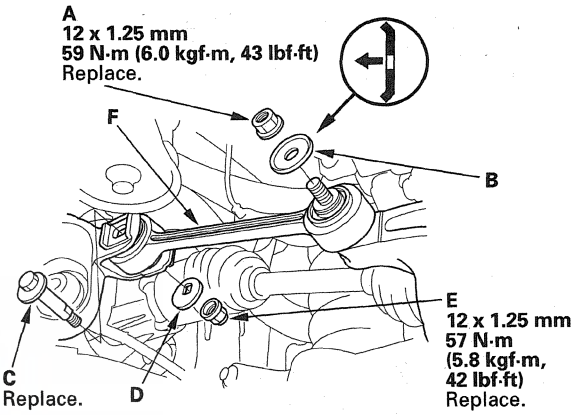

4. Mark the cam positions of the adjusting bolt (C) and the adjusting cam (D), then remove the self-locking nut (E), the adjusting cam, and the adjusting bolt.

   NOTE: Use a new self-locking nut and a new adjusting bolt during reassembly.

5. Remove the control arm (F).
6. Install the control arm in the reverse order of removal, and note these items:

   - First install all of the components, and lightly tighten the bolts and nuts, then raise the suspension to load it with the vehicle's weight before fully tightening to the specified torque.
   - Align the cam positions of the adjusting bolt and the adjusting cam with the marked positions when tightening.
   - Tighten all mounting hardware to the specified torque.
   - Before installing the wheel, clean the mating surfaces on the brake disc/drum and inside of the wheel.

7. Check the wheel alignment, and adjust it if necessary (see page 18-5).

Lower Arm B Removal and Installation

Special Tools Required
- Ball joint thread protector, 14 mm 07AAE-SJAA100
- Ball joint remover, 32 mm 07MAC-SL0A102

Removal

1. Raise the vehicle on a lift (see page 1-8).

2. Remove the wheel nuts, and the rear wheel.

3. Remove the self-locking nut (A) and the washer (C) while holding the joint pin (D) with a hex wrench (E), and disconnect the stabilizer link (F) from lower arm B.

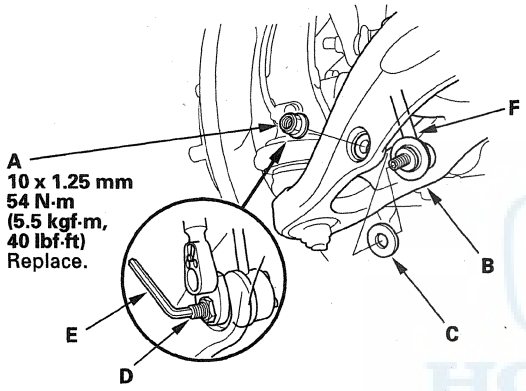

4. Place a floor jack at the connecting point of lower arm B and the stabilizer link.

5. Remove the cotter pin (A) from the lower arm B ball joint, and loosen the castle nut (C).

   NOTE:
   - Use the new castle nut during reassembly.
   - During installation, insert the new cotter pin into the ball joint pin hole from the rear to the front of the vehicle, and bend its end as shown. Check the ball joint pin hole direction before connecting the ball joint.

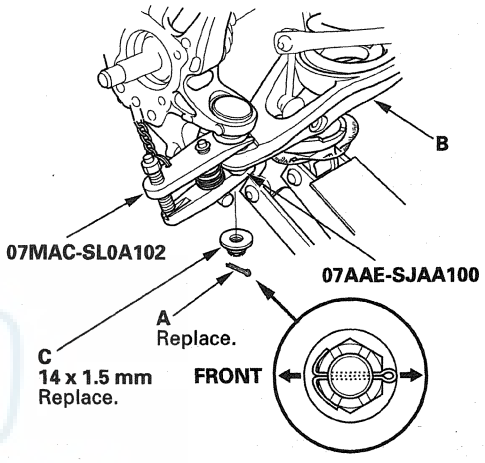

6. Disconnect the lower arm ball joint from the knuckle using the ball joint thread protector and the ball joint remover (see page 18-10).

7. Lower the floor jack gradually.

8. Remove the spring (A), the spring mounting cushion (C), and the lower spring seat (D).

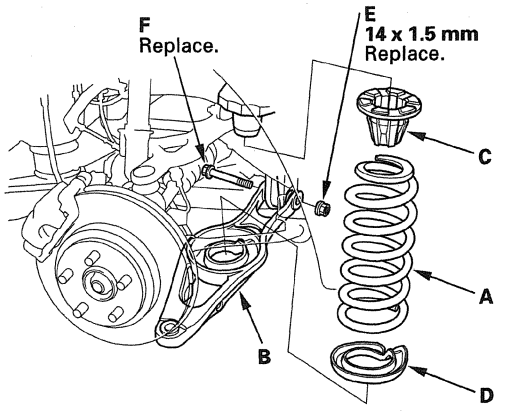

9. Remove the self-locking nut (E) and the flange bolt (F), then remove lower arm B.

Installation

1. Position lower arm B, install a new flange bolt (A), and loosely install a new self-locking nut (C).

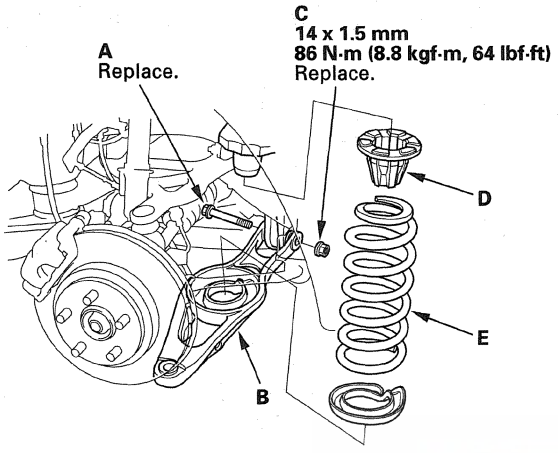

2. Install the spring mounting cushion (D) and the spring (E).

3. Align the bottom of the spring (A), the stepped part of the lower spring seat (C) and lower arm B.

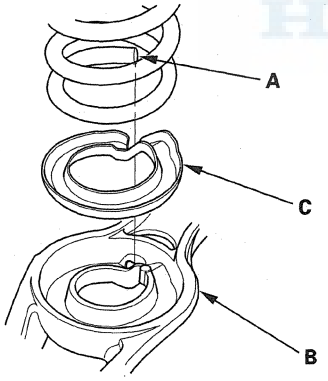

4. Place a floor jack at the connecting point of lower arm B and the stabilizer link.

5. Raise the jack slowly until you can align the bolt hole of lower arm B and the knuckle ball joint pin, then loosely install a new castle nut (A).

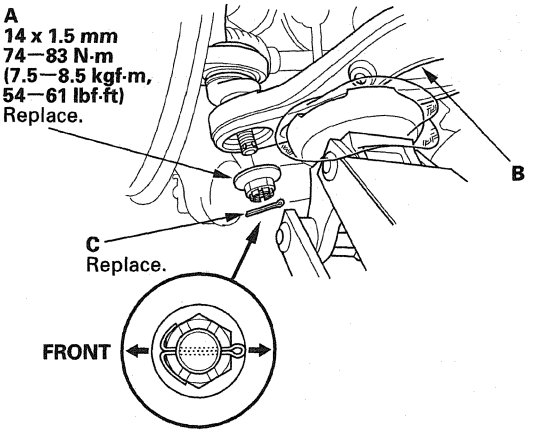

6. Install the stabilizer link on the lower arm B with the washer and a new self-locking nut, and lightly tighten them.

7. Raise the rear suspension with a floor jack to load it with the vehicle's weight.

8. Tighten the castle nut and the self-locking nut to the specified torque.

   NOTE:
   - Torque the castle nut to the lower torque specification, then tighten it only far enough to align the slot with the ball joint pin hole. Do not align the castle nut by loosening it.
   - Insert a new cotter pin (C) into the ball joint pin from the rear to the front of the vehicle, and bend its end as shown.
   - Refer to stabilizer Link Replacement to connect the lower arm B and the link (see page 18-36).

9. Clean the mating surface of the brake disc/drum the inside of the wheel, then install the rear wheel.

10. Check the rear wheel alignment, and adjust it if necessary (see page 18-5).

Stabilizer Link Removal/Installation

1. Raise the vehicle on a lift (see page 1-8).
2. Remove the wheel nuts, and the rear wheel.
3. Remove the self-locking nuts (A) while holding the respective joint pin (B) with a hex wrench (C), then remove the washer (D) and the stabilizer link (E).

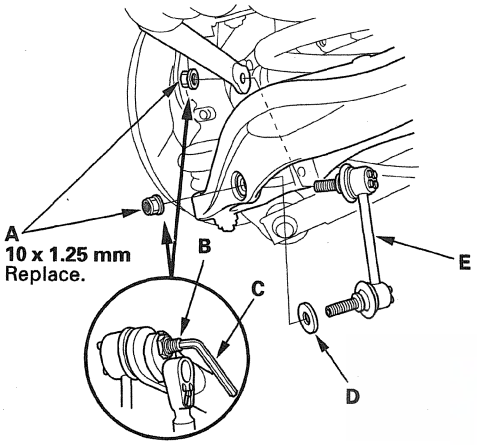

4. Place a floor jack at the connecting point of lower arm B and the stabilizer link, and raise the suspension.
5. Install the stabilizer link (A) on the stabilizer bar (C) and lower arm B with the joint pins set at the center of their range of the movement.

   NOTE: The stabilizer link has a paint mark (D). The paint mark indicates the difference between the left and right stabilizer link.

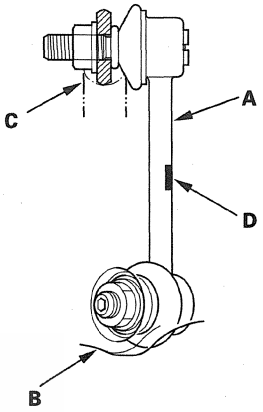

6. Install the washer and new self-locking nuts (A), and lightly tighten them.

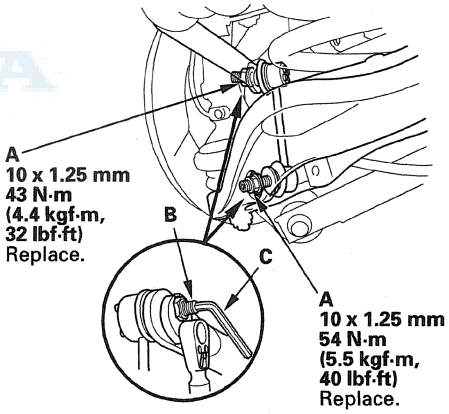

7. Tighten the self-locking nuts to the specified torque while holding the respective joint pin (B) with a hex wrench (C).
8. Clean the mating surface of the brake disc/drum and the inside of the wheel, then install the rear wheel.
9. Test-drive the vehicle.
10. After 5 minutes of driving, tighten the self-locking nuts again to the specified torque.

Stabilizer Bar Replacement

1. Raise the vehicle on a lift (see page 1-8).

2. Remove the wheel nuts, and the rear wheels.

3. Disconnect the stabilizer links from the stabilizer bar (A) on the right and left sides (see page 18-36).

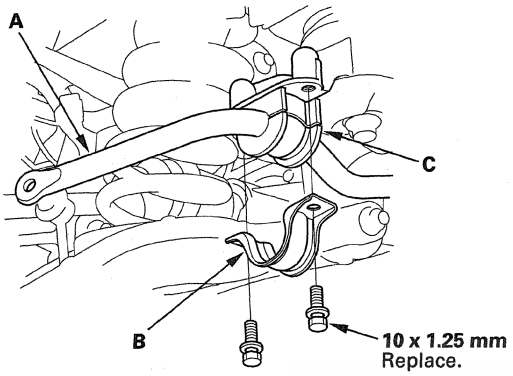

4. Remove the flange bolts and the bushing holders (B), then remove the bushing (C) and the stabilizer bar.

   NOTE: Use new flange bolts during reassembly.

5. Install the stabilizer bar in the reverse order of removal, and note these items:

   - Note the right and left direction of the stabilizer bar.
   - Align the ends of the paint marks (A) on the stabilizer bar with each end of the bushings (B).
   - Refer to Stabilizer Link Replacement to connect the stabilizer to the links (see page 18-36).
   - Clean the mating surface of the brake disc/drum and the inside of the wheel, then install the rear wheel.
   - Check the wheel alignment, and adjust it if necessary (see page 18-5).

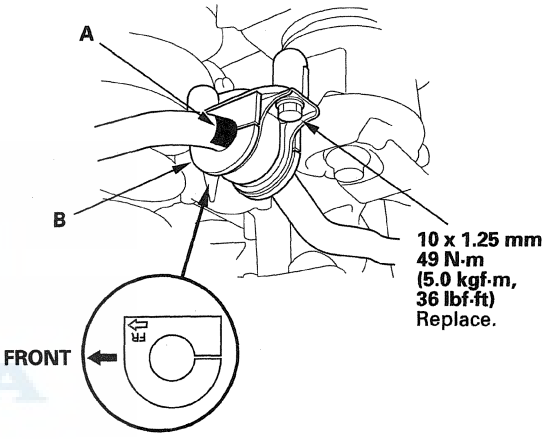

HONDA

Damper Replacement

Exploded View

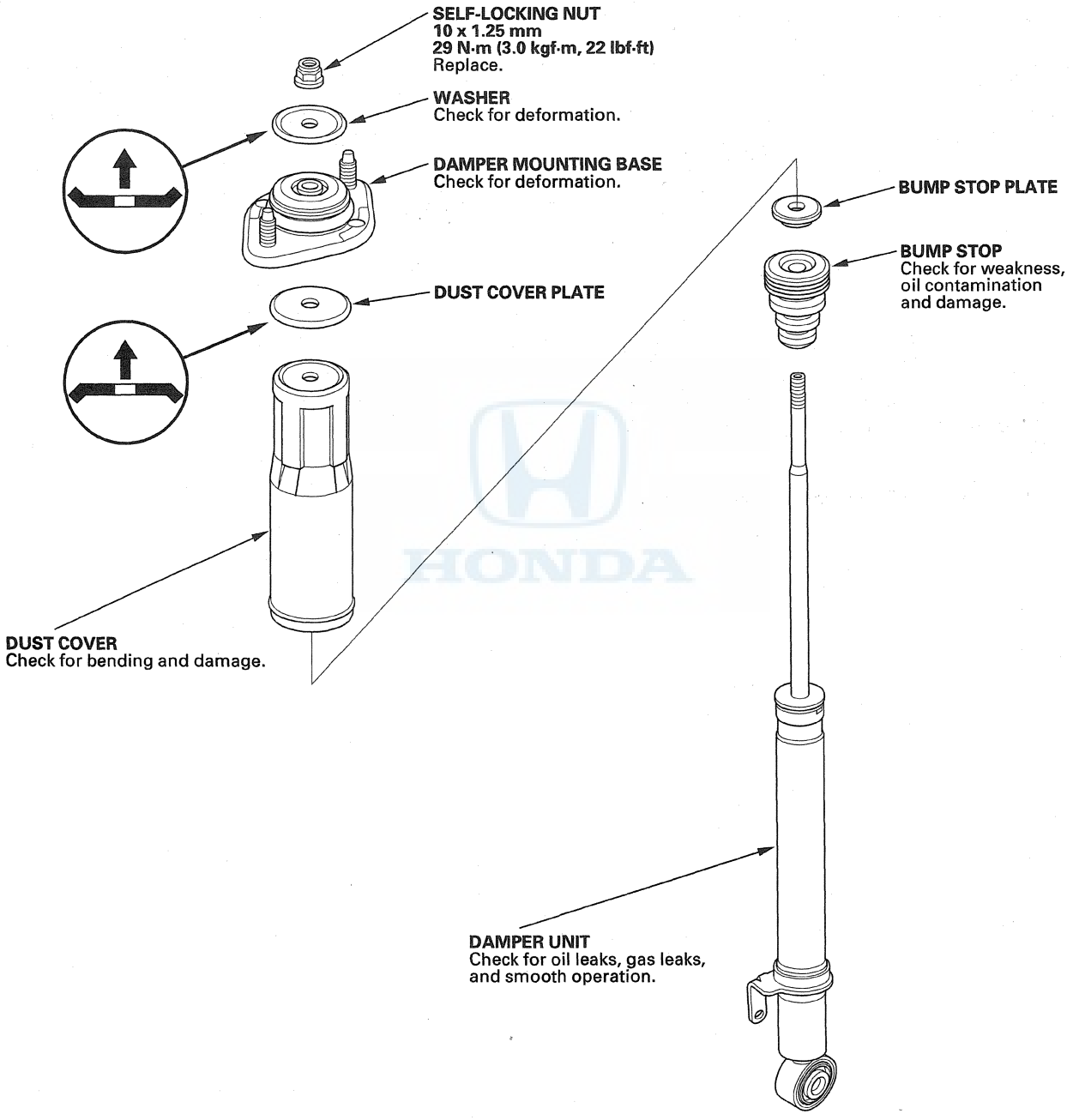

Removal

1. Raise the vehicle on a lift (see page 1-8).
2. Remove the wheel nuts, and the rear wheel.
3. Place a floor jack at the connecting point of lower arm B and the stabilizer link to support them.
4. Disconnect the headlight leveling sensor linkage (A) from the damper.

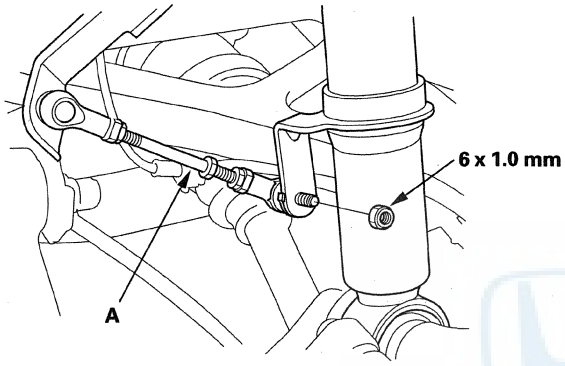

5. Remove the rear shelf (see page 20-80).
6. Remove the two flange nuts (A).

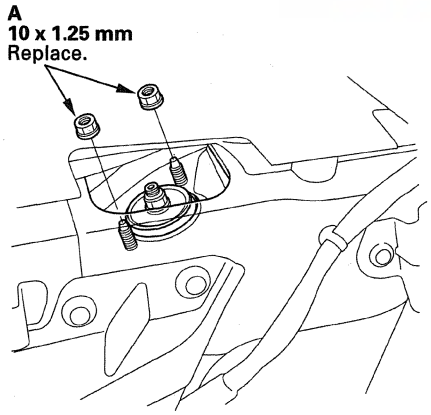

7. Remove the damper lower mounting bolt (A) from the knuckle.

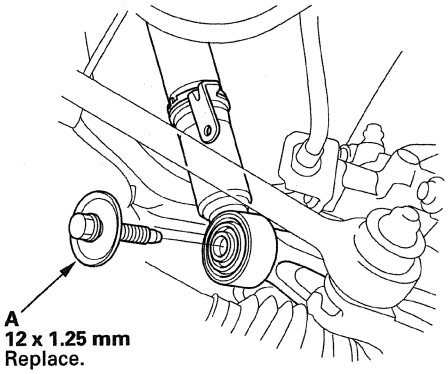

8. Lower the rear suspension, then remove the damper (A) from the vehicle.

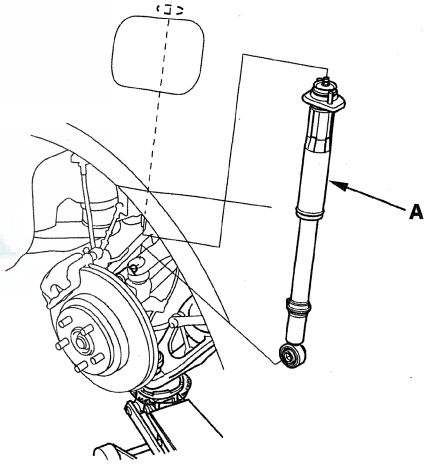

(cont'd)

Damper Replacement (cont'd)

Inspection

1. Disassemble the damper and check all the parts as shown in the Exploded View.
2. Install the damper mounting base, the washer, and the 10 mm nut to the damper unit.
3. Push on the damper by hand as shown.

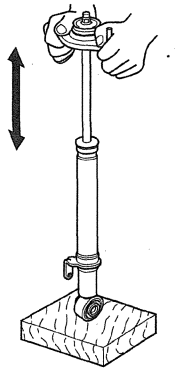

4. Compress the damper assembly by hand, and check for smooth operation through a full stroke, both compression and extension. The damper should extend in a smooth, continuous motion when the compression is released. If it does not, the gas is leaking and the damper should be replaced.
5. Check for oil leaks, abnormal noises, or binding during these tests.

Installation

1. Place a floor jack at the connecting point of lower arm B and the stabilizer link.

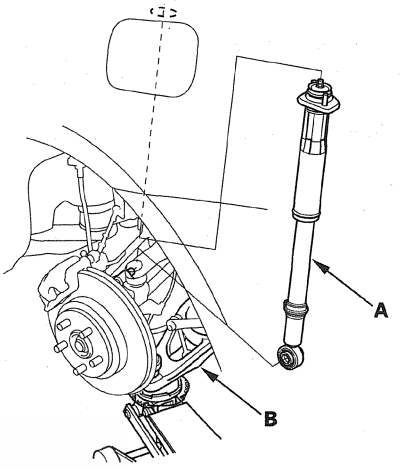

2. Compress the damper (A) by hand, and move it into position.
3. Loosely tighten a new damper lower mounting bolt (A).

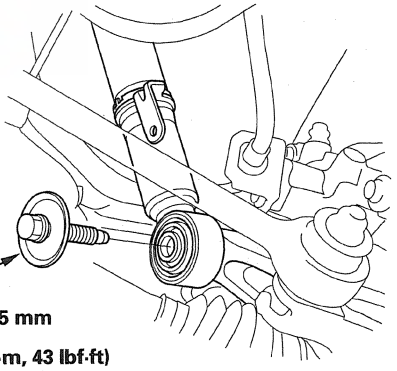

4. Loosely install new flange nuts.

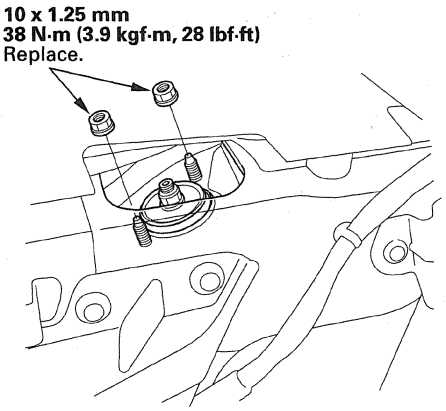

5. Raise the rear suspension with a floor jack to load it with the vehicle's weight.

6. Tighten the flange nuts and the damper lower mounting bolt to the specified torque.

7. Connect the headlight leveling sensor linkage (A) to the damper with the self-locking nut (B).

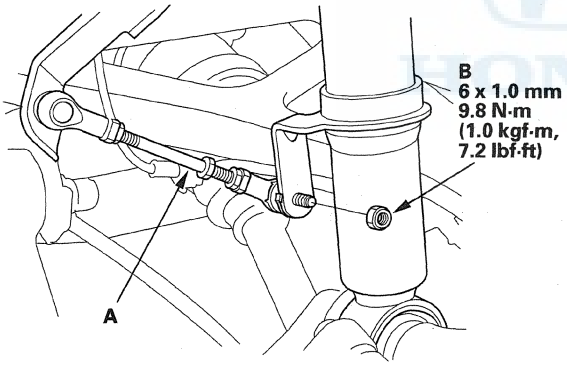

8. Clean the mating surface of the brake disc/drum and the inside of the wheel, then install the rear wheel.

9. Check the rear wheel alignment, and adjust it if necessary (see page 18-5).

10. Do the adaptive front lighting control unit learning procedure (see page 22-265).

Spring Replacement

Exploded View

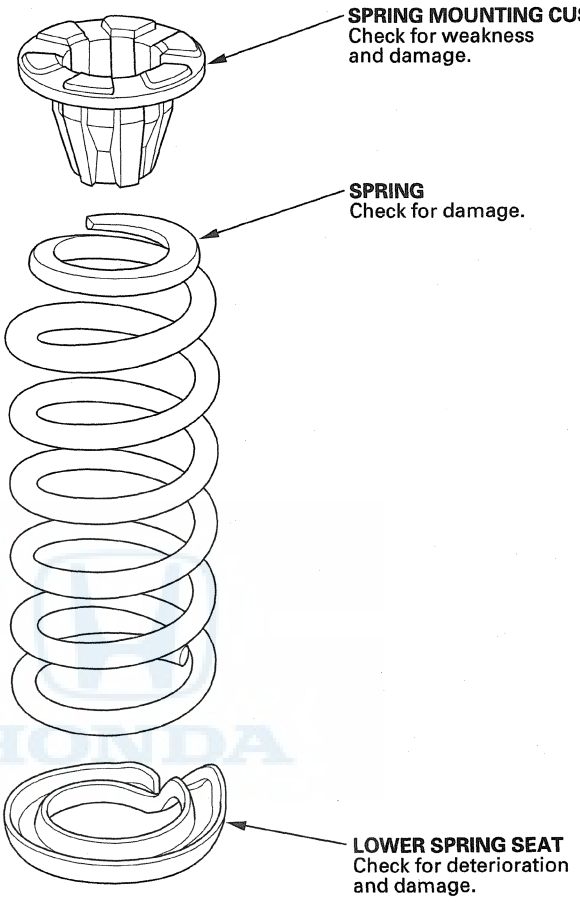

Special Tools Required
- Ball joint thread protector, 14 mm 07AAE-SJAA100
- Ball joint remover, 32 mm 07MAC-SL0A102

Removal

1. Raise the vehicle on a lift (see page 1-8).

2. Remove the wheel nuts, and the rear wheel.

3. Remove the self-locking nut (A) and the washer (C) while holding the joint pin (D) with a hex wrench (E), and disconnect the stabilizer link (F) from lower arm B.

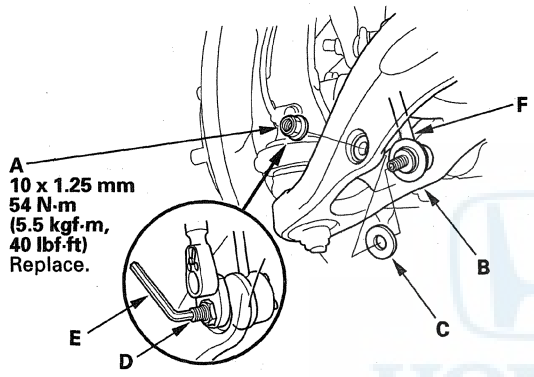

4. Place a floor jack at the connecting point of lower arm B and the stabilizer link.

5. Remove the cotter pin (A) from the lower arm B ball joint, and loosen the castle nut (C).

   NOTE: During installation, insert a new cotter pin into the ball joint pin hole from the rear to the front of the vehicle, and bend its end as shown. Check the boll joint pin hole direction before connecting the ball joint.

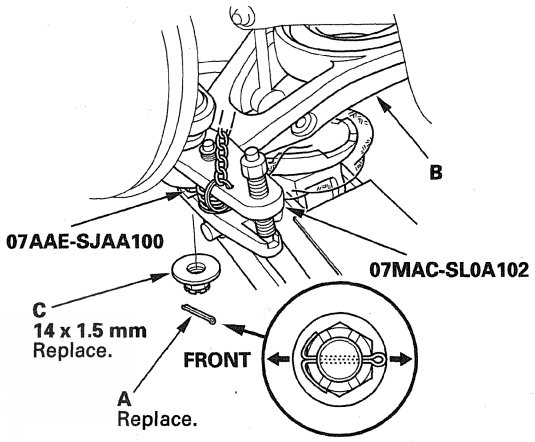

6. Disconnect the lower arm ball joint from the knuckle using the ball joint thread protector and the ball joint remover (see page 18-10).

7. Lower the floor jack gradually.

8. Remove the spring (A), the spring mounting cushion (B), and the lower spring seat (C).

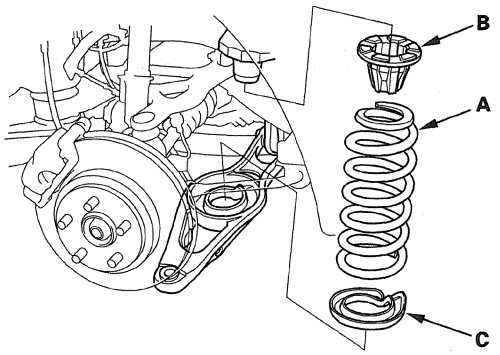

(cont'd)

Spring Replacement (cont'd)

Installation

1. Install the spring mounting cushion (A), the spring (B).

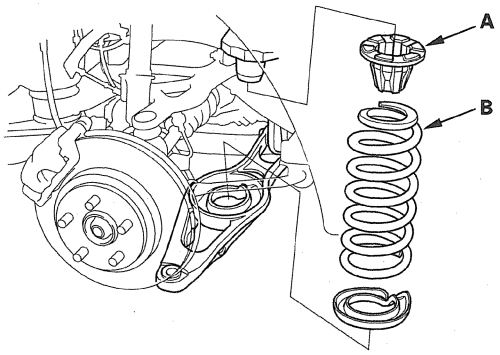

2. Align the bottom of the spring (A), the stepped part of the lower spring seat (C), and lower arm B.

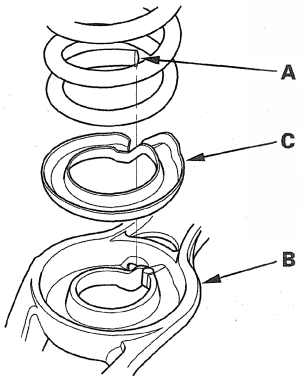

3. Place the floor jack at the connecting point of lower arm B and the stabilizer link.

4. Raise the jack slowly until you can align the bolt hole of lower arm B and the knuckle ball joint pin, then loosely install a new castle nut (A).

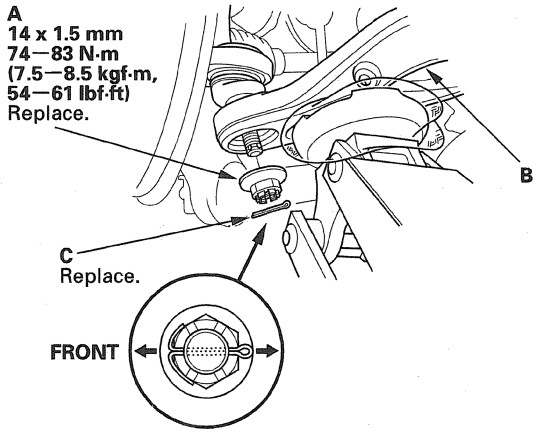

5. Install the stabilizer link on the lower arm B with the washer and a new self-locking nut, and lightly tighten them.

6. Raise the rear suspension with a floor jack to load it with the vehicle's weight.

7. Tighten the castle nut and self-locking nut to the specified torque.

   NOTE:
   - Torque the castle nut to the lower torque specification, then tighten it only far enough to align the slot with the ball joint pin hole. Do not align the castle nut by loosening it.
   - Insert a new cotter pin (C) into the ball joint pin from the rear to the front of the vehicle, and bend its end as shown.
   - Refer to stabilizer Link Replacement to connect the lower arm B and the link (see page 18-36).

8. Clean the mating surface of the brake disc/drum and the inside of the wheel, then install the rear wheel.

9. Check the rear wheel alignment, and adjust it if necessary (see page 18-5).

Suspension

Front and Rear Suspension **18-2**

Front Suspension **18-11**

Rear Suspension **18-26**

TPMS (Tire Pressure Monitoring System)

Component Location Index 18-46
General Troubleshooting Information 18-47
Memorizing the Tire Pressure Sensor ID 18-51
DTC Troubleshooting Index 18-52
Symptom Troubleshooting Index 18-53
System Description 18-54
Circuit Diagram 18-60
DTC Troubleshooting 18-63
Symptom Troubleshooting 18-80
Initiator Replacement 18-84
Tire Pressure Sensor Replacement 18-85
TPMS Control Unit Replacement 18-88



Component Location Index

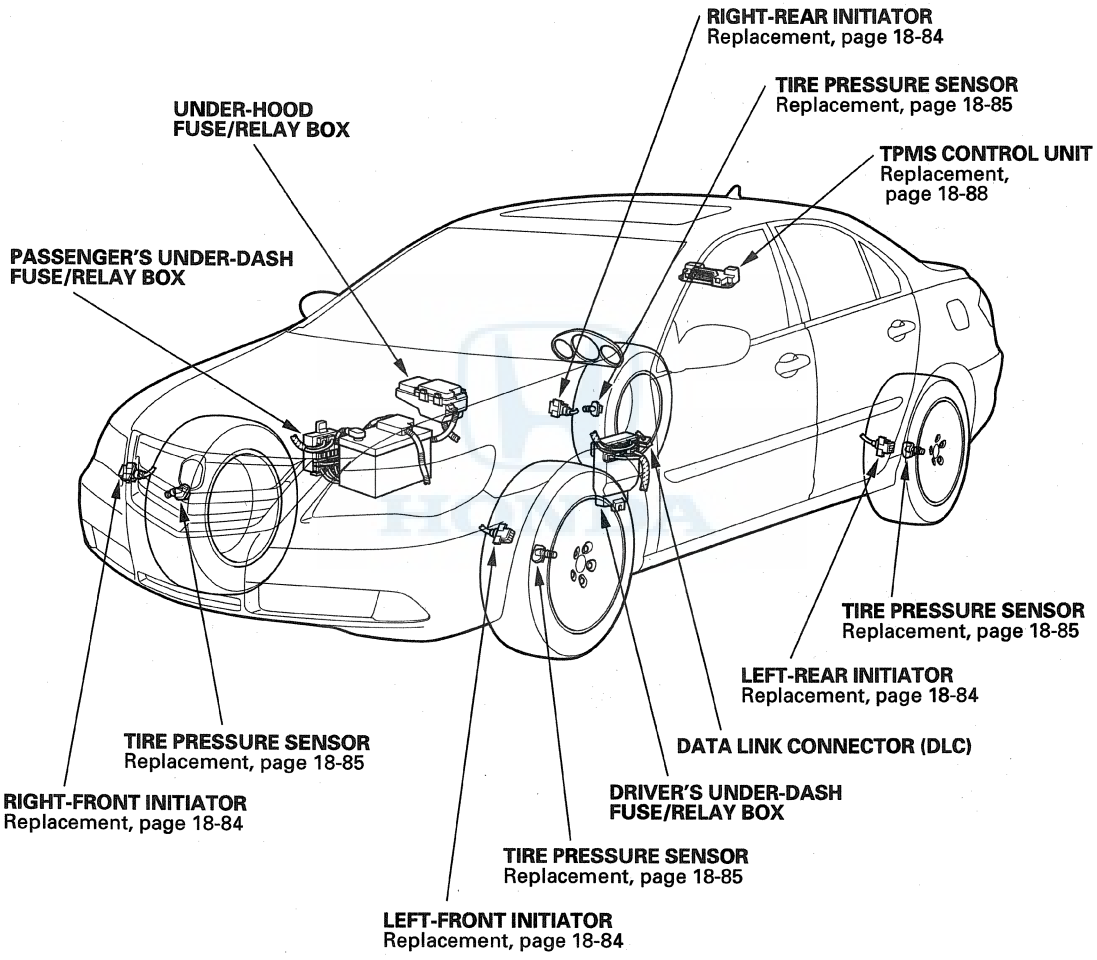

General Troubleshooting Information

System Indicator

The system has seven indicators.

- The low tire pressure indicator (A)
- The TPMS indicator (B)
- The right-front (RF) tire indicator (C)
- The left-front (LF) tire indicator (D)
- The right-rear (RR) tire indicator (E)
- The left-rear (LR) tire indicator (F)

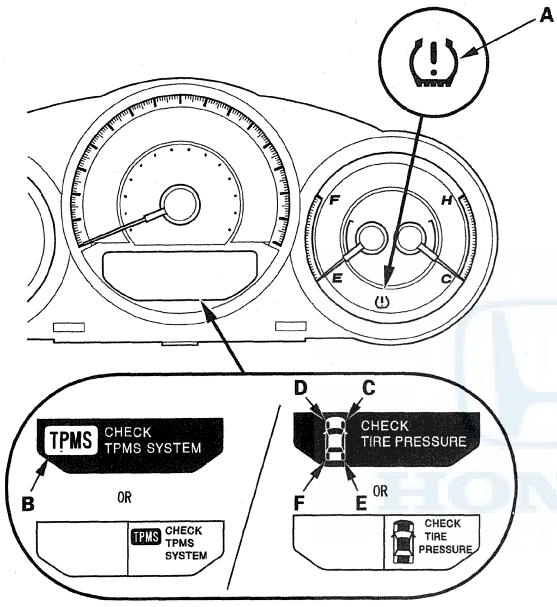

MULTI-INFORMATION DISPLAY

The Low Tire Pressure Indicator

- If the system detects low tire pressure in any of the four tires, the low tire pressure indicator and the appropriate tire indicator(s) come on, as well as the message indicator.
- If the control unit detects a problem in the system during an indication of low tire pressure, it will turn off the tire indicator(s), store the DTC(s), and turn on the TPMS indicator and the low tire pressure indicator after blinking.

The TPMS Indicator

- If a problem in the system is detected, the TPMS indicator comes on, as well as the message indicator, and the low tire pressure indicator comes on after blinking for about 75 seconds.
- If low tire pressure and a problem in the system are detected, the TPMS indicator comes on, as well as the message indicator, and the low tire pressure indicator comes on after blinking for about 75 seconds.

If the system is OK, the TPMS indicator and the low tire pressure indicator should come on when you turn the ignition switch to ON (II) and then go off 2 seconds later. If they don't, there is a problem with the system.

(cont'd)

General Troubleshooting Information (cont'd)

DTC 11, 13, 15, 17

If the system detects low tire pressure in any of the four tires, the low tire pressure indicator and the appropriate tire indicator(s) with the message indicator come on, and the control unit sets one or more of these codes: DTC 11, 13, 15, 17. When the tire pressure returns to normal, and TPMS control unit receives the normal pressure signal from the tire pressure sensor, the control unit turns off the indicators.

Tire Pressure Changing by Temperature

Tire pressures increase slightly as the temperature in the tires rises during driving.
Pressures can also increase or decrease slightly with changes in outside air temperature. A temperature change of about 18 °F (10 °C) changes tire pressure by about 10 kPa (0.1 kgf/cm^2, 1.5 psi). If the temperature drops, tire pressure could decrease enough to turn on the low tire pressure indicator and tire indicator(s), but later, the tire temperature could increase enough to turn indicator off. To resolve a complaint of such intermittent indications, confirm and clear the stored DTC(s) and check the tire pressures.
Then explain to the client how temperature changes can affect the system.

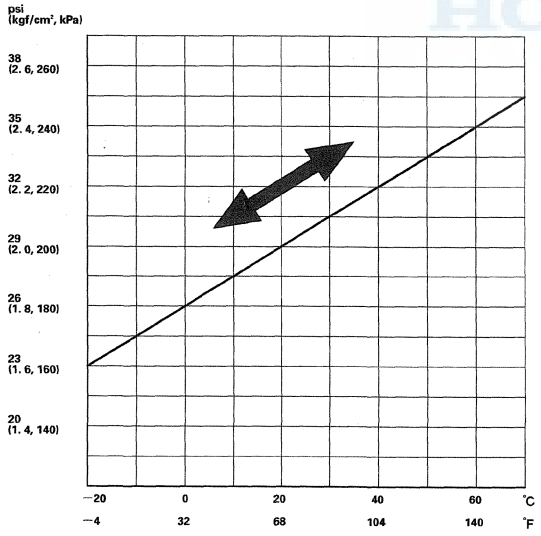

Problems That Are Not System Faults

- Tire Sealant
  Fluid sealant used to repair a punctured tire can damage the tire pressure sensor mounted on each wheel. It can prevent the system from detecting the correct tire pressure, which sets a DTC 11, 13, 15 or 17 even though the system is normal.
- Cold Weather
  When the weather is extremely cold, about −40 °F (−40 °C) or colder, the output of the lithium battery in each tire pressure sensor may drop far enough that the control unit sets a DTC for low battery voltage (31, 33, 35, or 37) even though the system is normal.
- Non-TPMS Wheels (Including Spare Tire)
  Vehicles equipped with TPMS must use wheels made for the system. Every TPMS wheel has an exclusive mark; do not use any other type of wheel (see page 18-58).
  When a flat tire is replaced with the spare tire, the TPMS indicator comes on (DTC 32, 34, 36, or 38) because the system is no longer receiving the signal from the flat tire's transmitter.
  This is not a problem with the spare tire.

How a Diagnostic Trouble Code (DTC) is Set

- When the system detects a problem, the TPMS control unit sets a code, but shifts to fail-safe mode, and does not alert the driver to low tire pressures.
- If the TPMS control unit loses power, or fails, the TPMS indicator and the low tire pressure indicator (starts blinking) comes on, but no DTCs are set.
- The memory can hold all the DTCs that could possibly be set. However, when the same DTC is detected more than once, the most recent one overwrites the previous one, so only the latest DTC of each type is stored.
- DTCs are indicated in ascending order, not in the order they occurred.
- Set DTCs are stored in the EEPROM (nonvolatile memory), and cannot be cleared by disconnecting the battery. To clear a DTC, connect the HDS (Honda Diagnostic System) to the data link connector (DLC), and follow the screen prompts.

How to Troubleshoot DTCs

DTC troubleshooting procedures assume the cause of the problem is still present and the TPMS indicator and the low tire pressure indicator (starts blinking) are still on. Do not use a troubleshooting procedure unless the system has set the DTC listed for it.

NOTE: For DTCs 11, 13, 15, and 17 (tire low tire pressure), the TPMS indicator comes on and the low tire pressure indicator blinks only if the DTCs are caused by a system problem rather than low tire pressure.

1. Ask the client to describe the conditions when the indicators came on or blinked, and try to reproduce the same conditions for troubleshooting. Find out if the client checked and/or adjusted tire pressures since the indicator came on.

2. If an indicator does not come on during the test-drive, check for loose terminals, poor contact due to damaged terminals, etc. before you start troubleshooting.

3. After troubleshooting, repair and clear the DTCs, and test-drive the vehicle. Make sure no indicators come on.

4. Check for DTCs from other control units that are connected the via F-CAN. If there are DTCs that are related to the F-CAN, the most likely cause was that the ignition switch was turned to ON (II) with the TPMS control unit connector disconnected. Clear the DTCs. Check for PGM-FI and TPMS codes, and troubleshoot those first.

(cont'd)

General Troubleshooting Information (cont'd)

How to Retrieve DTCs

1. With the ignition switch in LOCK (0), connect the HDS (Honda Diagnostic System) to the data link connector (DLC) (A) located under the driver's side of the dashboard.

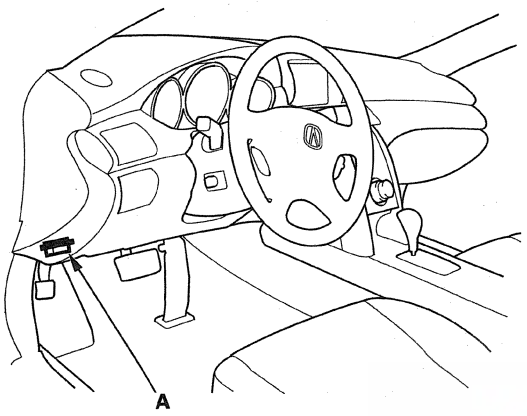

2. Turn the ignition switch to ON (II).
3. Make sure the HDS communicates with the vehicle and the TPMS control unit. If it doesn't, troubleshoot the DLC circuit (see page 11-211).
4. Follow the prompts on the HDS to display the DTC(s) on the screen. After determining the DTC, refer to the DTC troubleshooting.

   NOTE: See the HDS Help menu for specific instructions.

5. Turn the ignition switch to LOCK (0).

How to Clear DTCs

1. With the ignition switch in LOCK (0), connect the HDS to the data link connector (DLC) (A) located under the driver's side of the dashboard.

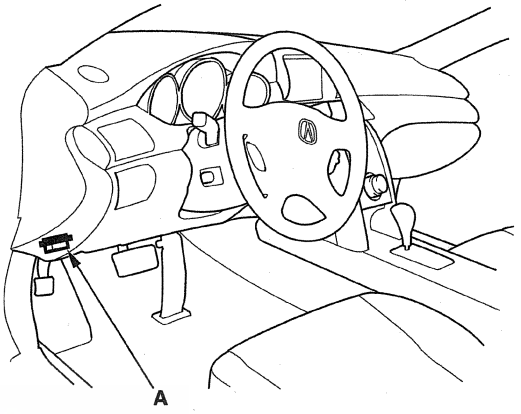

2. Turn the ignition switch to ON (II).
3. Make sure the HDS communicates with the vehicle and the TPMS control unit. If it doesn't, troubleshoot the DLC circuit (see page 11-211).
4. Clear the DTC(s) by following the screen prompts on the HDS.

   NOTE: See the HDS Help menu for specific instructions.

5. Turn the ignition switch to LOCK (0).

Memorizing the Tire Pressure Sensor ID

Memorizing a Tire Pressure Sensor ID

When a tire pressure sensor is replaced, the sensors ID must be memorized by the TPMS control unit.

NOTE: To ensure the control unit memorizes the correct ID, the vehicle with the new sensor must be at least 10 ft (3 m) away from other vehicles that have tire pressure sensors.

Memorizing a Sensor ID Automatically

After rotating the tires or replacing a tire pressure sensor, drive the vehicle for at least 40 seconds at a speed of 15 mph (24 km/h) or more, and all the sensor IDs are memorized automatically.

NOTE:
- When replacing the TPMS control unit, use the HDS to memorize IDs.
- After the IDs are memorized, reduce the pressure in all four tires to less than the appropriate specification, and check to see that the four tire indicators come on.

Memorize the ID with the HDS

The HDS can memorize the ID of a new tire pressure sensor or a previously memorized ID.

1. With the ignition switch in LOCK (0), connect the HDS to the data link connector (DLC) (A) located under the driver's side of the dashboard.

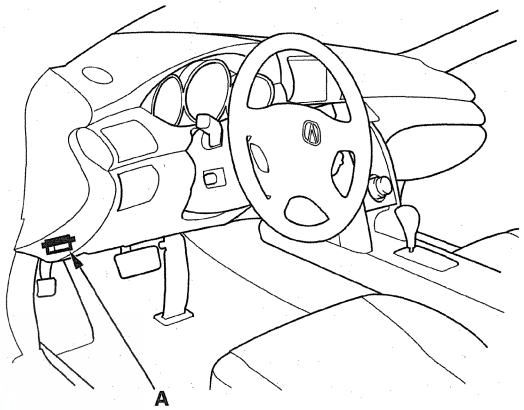

2. Turn the ignition switch to ON (II).
3. Make sure the HDS communicates with the vehicle and the TPMS control unit. If it doesn't, troubleshoot the DLC circuit (see page 11-211).
4. Memorize the ID of the tire pressure sensor by following the screen prompts on the HDS.

   NOTE:
   - See the HDS Help menu for specific instructions.
   - When replacing the TPMS control unit, use the HDS to memorize IDs.
   - After the IDs are memorized, reduce the pressure in all four tires to less than the appropriate specification, and check to see that the tire indicators come on.

5. Turn the ignition switch to LOCK (0).

DTC Troubleshooting Index

DTC	Detection Item	Troubleshooting
11	Right-front Tire Low Air Pressure	(see page 18-63)
13	Left-front Tire Low Air Pressure	(see page 18-63)
15	Right-rear Tire Low Air Pressure	(see page 18-63)
17	Left-rear Tire Low Air Pressure	(see page 18-63)
21	Right-front Tire Pressure Sensor Abnormally High Temperature	(see page 18-64)
22	Left-front Tire Pressure Sensor Abnormally High Temperature	(see page 18-64)
23	Right-rear Tire Pressure Sensor Abnormally High Temperature	(see page 18-64)
24	Left-rear Tire Pressure Sensor Abnormally High Temperature	(see page 18-64)
31	Right-front Tire Pressure Sensor Low Battery Voltage	(see page 18-64)
32	Right-front Tire Pressure Sensor Signal Failure	(see page 18-65)
33	Left-front Tire Pressure Sensor Low Battery Voltage	(see page 18-64)
34	Left-front Tire Pressure Sensor Signal Failure	(see page 18-65)
35	Right-rear Tire Pressure Sensor Low Battery Voltage	(see page 18-64)
36	Right-rear Tire Pressure Sensor Signal Failure	(see page 18-65)
37	Left-rear Tire Pressure Sensor Low Battery Voltage	(see page 18-64)
38	Left-rear Tire Pressure Sensor Signal Failure	(see page 18-65)
41	Abnormal Signal Reception Error	(see page 18-69)
45	Initiator Circuit Short Detection	(see page 18-70)
51	Right-front Tire Pressure Sensor Registration Error	(see page 18-73)
53	Left-front Tire Pressure Sensor Registration Error	(see page 18-73)
55	Right-rear Tire Pressure Sensor Registration Error	(see page 18-73)
57	Left-rear Tire Pressure Sensor Registration Error	(see page 18-73)
81	TPMS Control Unit Failure	(see page 18-77)
83	No VSP Signal	(see page 18-78)
85	F-CAN Communication Failure	(see page 18-78)
91	Right-front Tire Pressure Sensor Internal Error	(see page 18-79)
93	Left-front Tire Pressure Sensor Internal Error	(see page 18-79)
95	Right-rear Tire Pressure Sensor Internal Error	(see page 18-79)
97	Left-rear Tire Pressure Sensor Internal Error	(see page 18-79)

Symptom Troubleshooting Index

Symptom	Diagnostic procedure	Also check for
HDS does not communicate with the TPMS control unit or the vehicle	Troubleshoot the DLC circuit (see page 11-211)	Faulty data link cable
Low tire pressure indicator does not come on, and no DTCs are stored	Symptom Troubleshooting (see page 18-80)	
Low tire pressure indicator does not go off, and no DTCs are stored	Symptom Troubleshooting (see page 18-80)	
TPMS indicator does not come on, and no DTCs are stored	Symptom Troubleshooting (see page 18-81)	
TPMS indicator does not go off, and no DTCs are stored	Symptom Troubleshooting (see page 18-81)	

HONDA

System Description

TPMS Control Unit Inputs and Outputs for Connector A (14P)

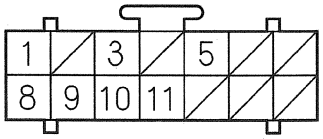

Wire side of female terminals

Terminal number	Wire color	Terminal sign	Description	Signal
1	RED	+B (Battery positive)	Power source for the TPMS control unit	Under all conditions: Battery voltage
3	BLK	GND (Ground)	Ground for the TPMS control unit	Under all conditions: Less than 0.1 V
5	YEL	IG1 (Ignition 1)	Power source for activating the system	Ignition switch ON (II): Battery voltage Ignitions switch LOCK (0): Less than 0.1 V
8	BRN	LF LF PWR. (LF low frequency power)	Power source for the left-front initiator	For 5 seconds with ignition switch ON (II): About 7 V
9	ORN	RF LF PWR. (RF low frequency power)	Power source for the right-front initiator	For 5 seconds with ignition switch ON (II): About 7 V
10	BRN	LR LF PWR. (LR low frequency power)	Power source for the left-rear initiator	For 5 seconds with ignition switch ON (II): About 7 V
11	PUR	RR LF PWR. (RR low frequency power)	Power source for the right-rear initiator	For 5 seconds with ignition switch ON (II): About 7 V

TPMS Control Unit Inputs and Outputs for Connector B (20P)

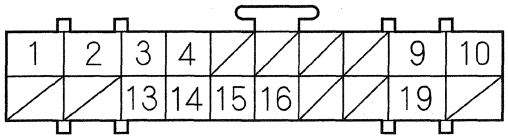

Wire side of female terminals

Terminal number	Wire color	Terminal sign	Description	Signal
1	LT GRN	RF LF SIG. (RF low frequency signal)	Detects the signal from the right-front initiator	For the first 5 seconds after turning the ignition switch ON (II): Pulses 0—2 V
				Ignition switch ON (II) for more than 5 seconds: Less than 0.1 V
2	GRY	RR LF SIG. (RR low frequency signal)	Detects the signal from the right-rear initiator	For the first 5 seconds after turning the ignition switch ON (II): Pulses 0—2 V
				Ignition switch ON (II) for more than 5 seconds: Less than 0.1 V
3	GRY	LF LF SIG. (LF low frequency signal)	Detects the signal from the left-front initiator	For the first 5 seconds after turning the ignition switch ON (II): Pulses 0—2 V
				Ignition switch ON (II) for more than 5 seconds: Less than 0.1 V
4	PNK	LR LF SIG. (LR low frequency signal)	Detects the signal from the left-rear initiator	For the first 5 seconds after turning the ignition switch ON (II): Pulses 0—2 V
				Ignition switch ON (II) for more than 5 seconds: Less than 0.1 V
9	LT BLU	K-LINE (Data link connector)	Communications with HDS	——
10	RED	CANL (CAN communication signal low)	Sends the communication signal	Ignition switch ON (II): Pluses

(cont'd)

System Description (cont'd)

TPMS Control Unit Inputs and Outputs for Connector B (20P)

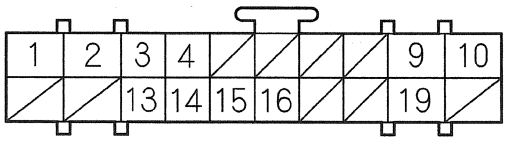

Wire side of female terminals

Terminal number	Wire color	Terminal sign	Description	Signal
13	LT BLU	LF LF GND (LF low frequency ground)	Ground for the left-front initiator	Ignition switch ON (II): Less than 0.1 V
14	PNK	RF LF GND (RF low frequency ground)	Ground for the right-front initiator	Ignition switch ON (II): Less than 0.1 V
15	GRN	LR LF GND (LR low frequency ground)	Ground for the left-rear initiator	Ignition switch ON (II): Less than 0.1 V
16	LT GRN	RR LF GND (RR low frequency ground)	Ground for the right-rear initiator	Ignition switch ON (II): Less than 0.1 V
19	WHT	CANH (CAN communication signal high)	Sends the communication signal	Ignition switch ON (II): Pulses

System Structure

Whenever the engine is running, the TPMS control unit continuously monitors all four tire pressure sensors and the system function. If it detects low pressure in a tire, it alerts the driver by turning on the low tire pressure indicator and the appropriate tire indicator. If it detects a problem in the system, it turns on the TPMS indicator and the low tire pressure indicator (starts blinking).

Initiators
Mounted on the top of each wheel well, each initiator sends a start/stop signal to the tire pressure sensor in the tire below it.

Control unit
Mounted on top of the brake pedal support member, the control unit sends signals to the initiators and receives signals from the tire pressure sensor to verify pressure sensor IDs every time the engine starts. It also receives signals from the transmitters inside the tire pressure sensors, and it continuously monitors and controls the system.

Indicators
All indicators are in the gauge control module: The low tire pressure indicator (LED indicator), the four tire indicators (on the multi-information display) to show which tire is affected, and the TPMS indicator (on the multi-information display) that comes on only if there's a problem with the system. The message indicator (LED indicator) comes on when there is one or more indicators on in the multi-information display. When two or more tire pressures are low, the low tire pressure indicator comes on about 5 seconds before the appropriate tire indicator. Once low pressure is detected, the system scans all four pressure sensors to ensure that it turns on the correct tire indicator.

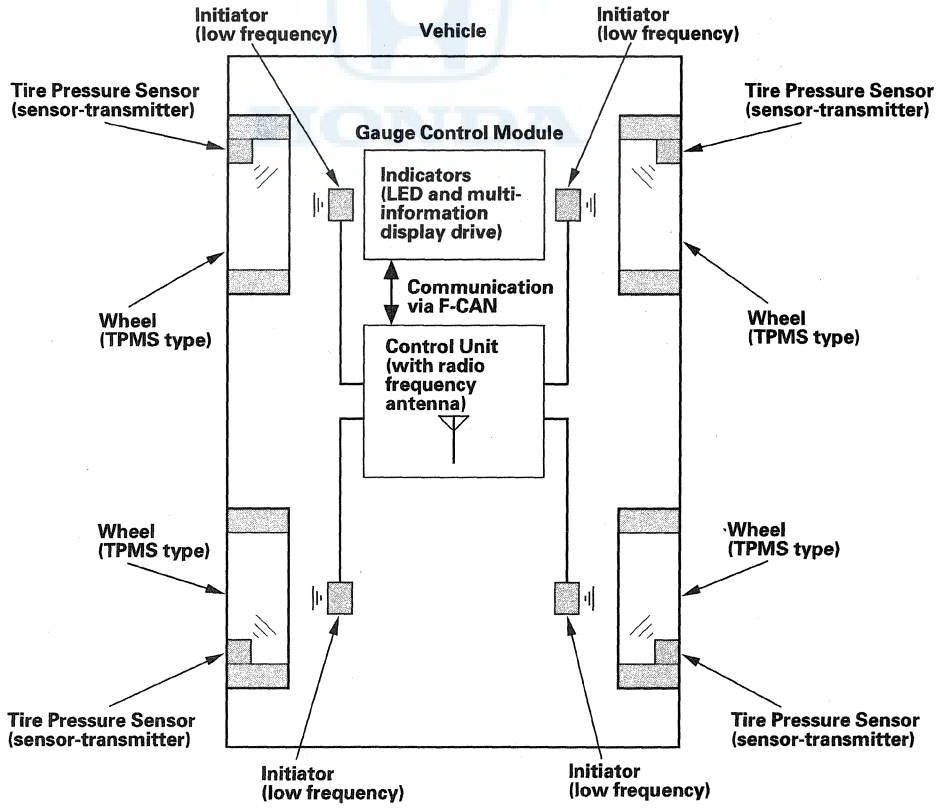

(cont'd)

System Description (cont'd)

Tire pressure sensor
Each sensor is an integrated unit made up of the tire valve stem, a pressure sensor, and a transmitter. The unit is attached to the inside of the wheel, around the valve stem. The sensor transmits internal tire information to the control unit, when the TPMS control unit receives a tire pressure reading of less than 168 kPa (1.7 kgf/cm^2, 24 psi). The TPMS control unit then turns on the low pressure indicator and the appropriate tire(s) indicator. When that tire's pressure is increased to more than 198 kPa (2.0 kgf/cm^2, 29 psi), the transmitter sends the tire pressure reading to the control unit, and the control unit turns the indicators off.

Wheels
The TPMS will not work unless TPMS type wheels are installed on the vehicle. The original equipment wheels have a "TPMS" mark (A) on them, and a counterweighted (B) by adding material on the opposite side of the tire pressure sensor (C), to counterbalance the weight of the sensor.

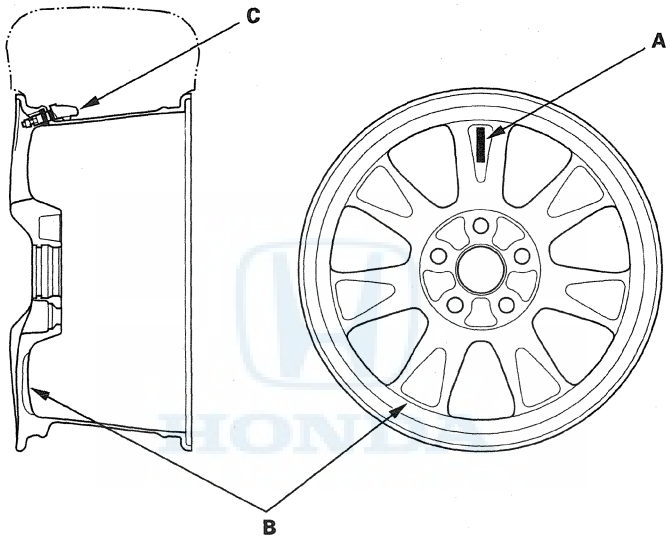

System Communication

- When the vehicle is running, a RF (radio frequency) band wave signal is transmitted from each tire pressure sensor to the control unit.
- When the ignition switch is turned to ON (II), the initiators send a LF (low frequency) band wave signal to the tire pressure sensors, switching them from sleep mode to normal function mode. When the ignition switch is turned to LOCK (0), the sensors switch from normal function mode back to sleep mode to extend their battery life.
- Each tire pressure sensor has its own ID to prevent jamming by similar systems on other vehicles. After memorizing all the sensor IDs, the control unit recognizes only those specific signals.
- An ID can be memorized manually or automatically. Each initiator is hardwired to the control unit. Every time the ignition is turned to ON (II), the control unit asks each initiator to wake up the appropriate tire pressure sensor. The transmitters in the tire pressure sensors then transmit the sensor IDs, and the control unit receives, and memorizes them. The control unit then knows which ID belongs to each tire location. This recurring ID confirmation prevents any confusion in the system as a result of normal tire rotation.

NOTE: Be careful not to bend the bracket or base on the TPMS control unit and front/rear initiators. Misalignment of the control unit and initiators could interfere with sending and receiving signals.

Control Unit
(with Radio Frequency Antenna)

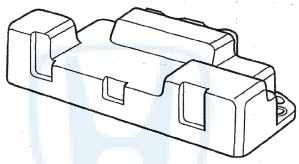

Initiator
(Low Frequency Initiator)

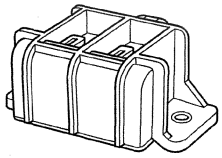

Tire Pressure Sensor
(Sensor-transmitter)

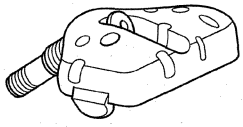

Circuit Diagram

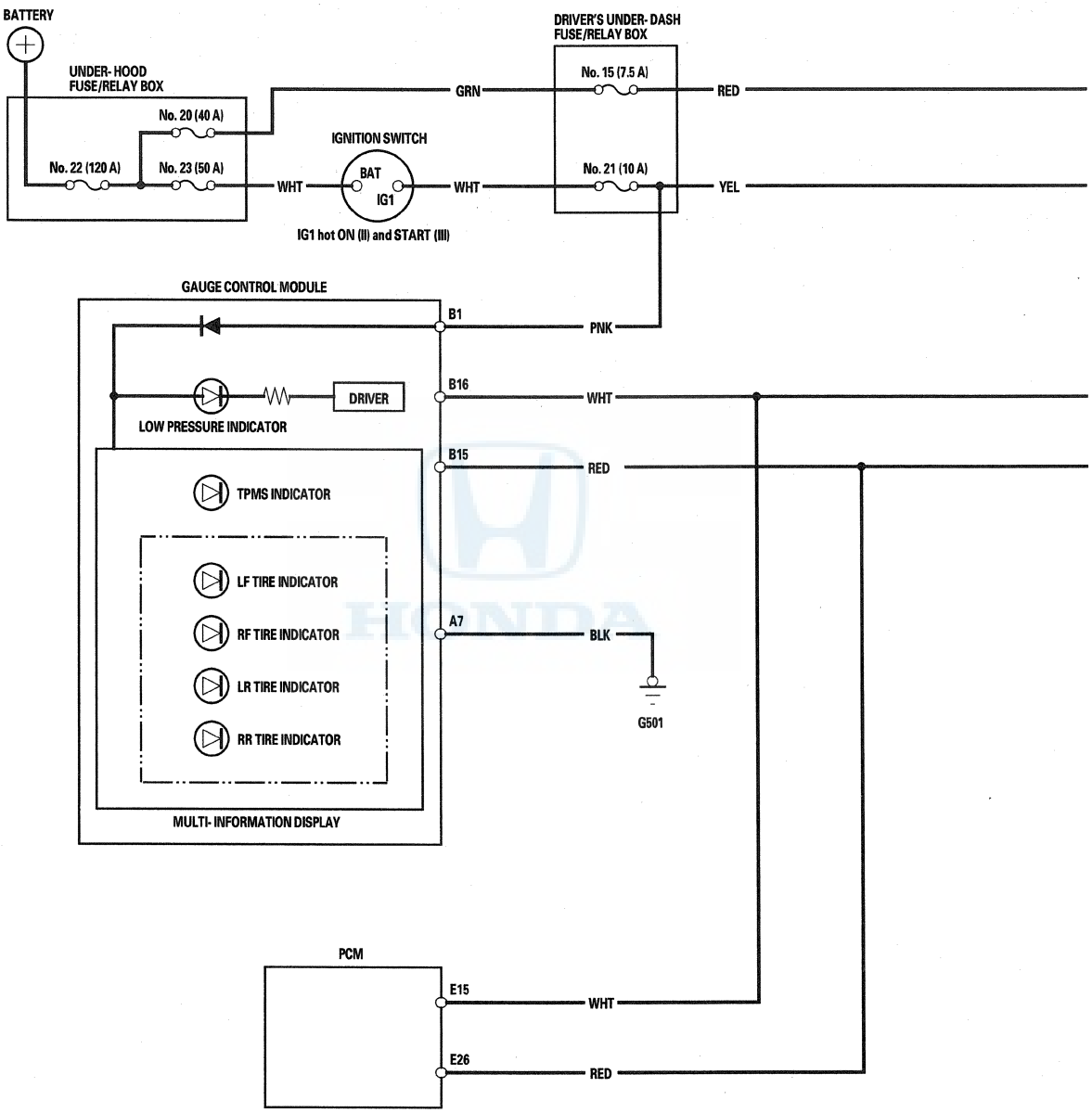

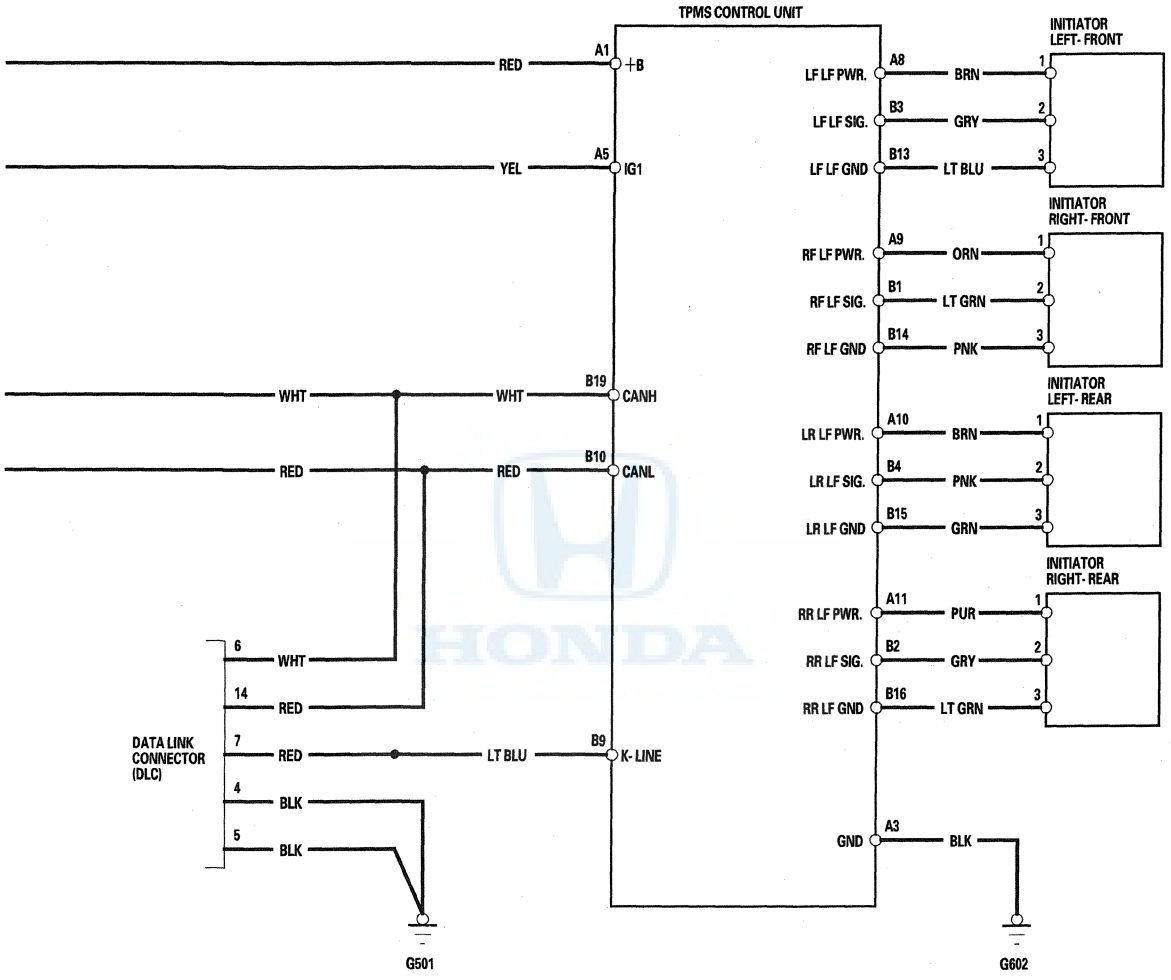
TPMS CONTROL UNIT
RED
A1
+B
YEL
A5
IG1
WHT
WHT
B19
CANH
RED
RED
B10
CANL
DATA LINK CONNECTOR (DLC)
6
WHT
14
RED
7
RED
LT BLU
B9
K-LINE
4
BLK
5
BLK
G501
LF LF PWR.
A8
BRN
1
LF LF SIG.
B3
GRY
2
LF LF GND
B13
LT BLU
3
INITIATOR LEFT-FRONT
RF LF PWR.
A9
ORN
1
RF LF SIG.
B1
LT GRN
2
RF LF GND
B14
PNK
3
INITIATOR RIGHT-FRONT
LR LF PWR.
A10
BRN
1
LR LF SIG.
B4
PNK
2
LR LF GND
B15
GRN
3
INITIATOR LEFT-REAR
RR LF PWR.
A11
PUR
1
RR LF SIG.
B2
GRY
2
RR LF GND
B16
LT GRN
3
INITIATOR RIGHT-REAR
GND
A3
BLK
G602

(cont'd)

Circuit Diagram (cont'd)

GAUGE CONTROL MODULE CONNECTOR A (20P)

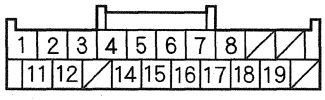

Wire side of female terminals

GAUGE CONTROL MODULE CONNECTOR B (28P)

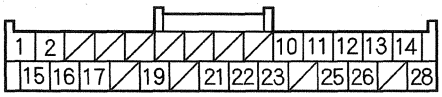

Wire side of female terminals

PCM CONNECTOR E (31P)

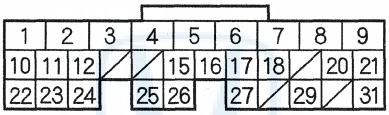

Wire side of female terminals

DATA LINK CONNECTOR (16P)

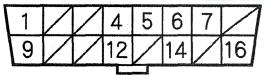

Terminal side of female terminals

INITIATOR CONNECTOR (3P)

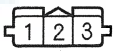

Wire side of female terminals

TPMS CONTROL UNIT CONNECTOR A (14P)

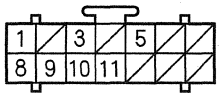

Wire side of female terminals

TPMS CONTROL UNIT CONNECTOR B (20P)

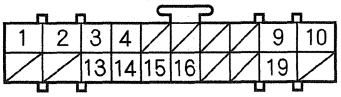

Wire side of female terminals

DTC Troubleshooting

DTC 11, 13, 15, 17: Low Air Pressure

NOTE: If low tire pressure is detected, the control unit sets one or more of these DTCs, and turn on the low tire pressure indicator and the appropriate tire indicator(s). If the low tire pressure and tire indicators come on because of a low tire pressure, and the client corrects it before bringing the vehicle in, the DTCs will be stored, but all the indicators turns off.

1. Turn the ignition switch to LOCK (0).
2. Make sure the tires are inflated to the specified tire pressure listed on the doorjamb sticker.
3. Test-drive the vehicle.

   Does the low tire pressure indicator go off?

   YES—The system is OK at this time. Check for and repair the cause of air loss. ■

   NO—Go to step 4.

4. Check the RF, LF, RR, or LR TIRE PRESSURE in the TPMS DATA LIST with the HDS, and compare it with the measured actual tire pressure.

   NOTE: If UNDEFINED is shown on the sensor transmitter status, turn the ignition switch to LOCK (0), rotate the tire 1/4 turn, then turn the ignition switch to ON (II), and try again. If UNDEFINED is still displayed, repeat the procedure in the previous sentence until NORMAL is shown.

   Is the indicated tire pressure on the HDS within 40 kPa (0.4 kgf/cm², 6 psi) of the actual tire pressure?

   YES—Check for loose terminals and poor connections at the TPMS control unit. If necessary, substitute a known-good TPMS control unit (see page 18-88), and recheck. ■

   NO—Check that the tire-pressure sensor is properly mounted. If mounting is OK, then replace the appropriate tire pressure sensor (see page 18-85). ■

DTC Troubleshooting (cont'd)

DTC 21, 22, 23, 24: Tire Pressure Sensor Abnormally High Temperature

1. Turn the ignition switch to ON (II).
2. Check the tire indicated by the DTCs you retrieved.

   NOTE: An abnormal rise in the internal temperature of the tires can be caused by:
   - Excessive braking
   - Failure to release the parking brake (rear tires only)
   - Leaving the vehicle running while parked (front tires)
   - Improper assembly of a wheel and tire

DTC	Tire Location
21	Right-front
22	Left-front
23	Right-rear
24	Left-rear

3. Turn the ignition switch to LOCK (0).
4. Make sure the tires have cooled down.
5. Turn the ignition switch to ON (II).

   Does the TPMS indicator go off within 1 minute?

   YES—The system is OK at this time. Clear the DTC with the HDS. ■

   NO—Go to step 6.
6. Check the RF, LF, RR, or LR TIRE PRESSURE SENSOR TEMPERATURE in the TPMS DATA LIST with the HDS.

   NOTE: If UNDEFINED shown on the sensor transmitter status, turn the ignition switch to LOCK (0), rotate the tire 1/4 turn, then turn the ignition switch to ON (II), and try again. If UNDEFINED is still displayed, repeat the procedure in the previous sentence until NORMAL is shown.

   Is 176 °F (80 °C) or more indicated?

   YES—Replace the appropriate tire pressure sensor (see page 18-85). ■

   NO—Check for loose terminals and poor connections at the TPMS control unit. If necessary, substitute a known-good TPMS control unit (see page 18-88), and recheck. ■

DTC 31, 33, 35, 37: Tire Pressure Sensor Low Battery Voltage

NOTE: This problem occurs when the temperature around the sensor is −40 °F (−40 °C) or less. Note that the diagnosis must be made in a place where ambient temperature is −4 °F (−20 °C) or more.

1. Turn the ignition switch to ON (II).

   Does the TPMS indicator go off within 1 minute?

   YES—The system is OK at this time. Clear the DTC with the HDS. ■

   NO—Go to step 2.
2. Check the RF, LF, RR, or LR TIRE PRESSURE SENSOR BATTERY STATUS in the TPMS DATA LIST with the HDS.

   NOTE: If UNDEFINED is shown on the sensor transmitter status, turn the ignition switch to LOCK (0), rotate the tire 1/4 turn, then turn the ignition switch to ON (II), and try again. If UNDEFINED is still displayed, repeat the procedure in the previous sentence until NORMAL is shown.

DTC	Tire Location
31	Right-front
33	Left-front
35	Right-rear
37	Left-rear

   Is LOW indicated?

   YES—Replace the appropriate tire pressure sensor (see page 18-85). ■

   NO—Check for loose terminals and poor connections at the TPMS control unit. If necessary, substitute a known-good TPMS control unit (see page 18-88), and recheck. ■

DTC 32, 34, 36, 38: Tire Pressure Sensor Signal Failure

NOTE:
- Inspect for an aftermarket device(s) (such as an inverter, battery charger, etc) interfering with the RF signal from the sensors when turning the ignition switch to ON (II).
- Vehicle must be driven for 3 minutes at 15 mph (24 km/h) or more for DTC 32, 34, 36, or 38 to set.

1. Turn the ignition switch to ON (II).
2. Check the DTC indicated to the tire location to make sure the wheel is a TPMS type with the tire pressure sensor.

DTC	Tire Location
32	Right-front
34	Left-front
36	Right-rear
38	Left-rear

Is a TPMS type wheel with a tire pressure sensor mounted on the vehicle?

YES—Go to step 3.

NO—Install a TPMS type wheel and memorize the sensor ID. Drive the vehicle above 15 mph (24 km/h) continuously for 40 seconds, or memorize the ID with the HDS (see page 18-51).■

3. Test-drive the vehicle.
4. Check the VEHICLE SPEED in the TPMS DATA LIST with the HDS.

Is the vehicle speed indicated?

YES—Go to step 8.

NO—Go to step 5.

5. Turn the ignition switch to LOCK (0).
6. Turn the ignition switch to ON (II).
7. Check for DTCs with the HDS.

Is DTC 85 indicated?

YES—Go to the DTC 85 troubleshooting (see page 18-78).■

NO—Check for loose terminals and poor connections at the TPMS control unit. If necessary, substitute a known-good TPMS control unit (see page 18-88), and recheck.■

8. Turn the ignition switch to LOCK (0).
9. Turn the ignition switch to ON (II).
10. Check the TPMS DATA LIST for RF, LF, RR, or LR TIRE PRESSURE SENSOR STATUS changes to NORMAL with the HDS.

NOTE: If UNDEFINED is shown on the sensor transmitter status, turn the ignition switch to LOCK (0), rotate the tire 1/4 turn, then turn the ignition switch to ON (II), and try again. If UNDEFINED is still displayed, repeat the procedure in the previous sentence until NORMAL is shown.

DTC	Tire Location
32	Right-front
34	Left-front
36	Right-rear
38	Left-rear

Is NORMAL indicated within one full turn of the tire?

YES—The system is OK at this time. Clear the DTC with the HDS.■

NO—Go to step 11.

(cont'd)

DTC Troubleshooting (cont'd)

11. Turn the ignition switch to LOCK (0).

12. Substitute a wheel with a known-good tire pressure sensor on the vehicle (see page 18-85).

13. To memorize the sensor ID, drive the vehicle above 15 mph (24 km/h) for 40 continuous seconds, or memorize the ID with the HDS (see page 18-51).

14. Turn the ignition switch to LOCK (0) and wait 2 minutes for the sensors to go to sleep.

15. Turn the ignition switch to ON (II).

16. Check the TPMS DATA LIST for RF, LF, RR, or LR TIRE PRESSURE SENSOR STATUS changes to NORMAL with the HDS.

    NOTE: If UNDEFINED is shown on the sensor transmitter status, turn the ignition switch to LOCK (0), rotate the tire 1/4 turn, then turn the ignition switch to ON (II), and try again. If UNDEFINED is still displayed, repeat the procedure in the previous sentence until NORMAL is shown.

DTC	Tire Location
32	Right-front
34	Left-front
36	Right-rear
38	Left-rear

    Is NORMAL indicated within one full turn of the tire?

    YES—Replace the tire pressure sensor on the client's wheel (see page 18-85). ■

    NO—Go to step 17.

17. Turn the ignition switch to LOCK (0).

18. Substitute an initiator from a known-good location on the current vehicle, or form another known-good vehicle (see page 18-84).

19. To memorize the sensor ID, drive the vehicle above 15 mph (24 km/h) for 40 continuous seconds, or memorize the ID with the HDS (see page 18-51).

20. Turn the ignition switch to LOCK (0) and wait 2 minutes for the sensors to go to sleep.

21. Turn the ignition switch to ON (II).

22. Check the TPMS DATA LIST for RF, LF, RR, and LR TIRE PRESSURE SENSOR STATUS changes to NORMAL with the HDS.

    NOTE: If UNDEFINED is shown on the sensor transmitter status, turn the ignition switch to LOCK (0), rotate the tire 1/4 turn, then turn the ignition switch to ON (II), and try again. If UNDEFINED is still displayed, repeat the procedure in the previous sentence until NORMAL is shown.

DTC	Tire Location
32	Right-front
34	Left-front
36	Right-rear
38	Left-rear

    Is NORMAL indicated within one full turn of the tire?

    YES—Replace the appropriate initiator (see page 18-84). ■

    NO—Go to step 23.

23. Turn the ignition switch to LOCK (0).

24. Disconnect the appropriate initiator 3P connector.

DTC	Initiator Location
32	Right-front
34	Left-front
36	Right-rear
38	Left-rear

25. Disconnect TPMS control unit connector A (14P) and B (20P).

26. Check for continuity between the appropriate TPMS control unit connector A (14P) terminal and appropriate initiator 3P connector terminal No. 1 (see table).

DTC	TPMS Control Unit Connector A (14P) Terminal	Initiator Location
32	No. 9	Right-Front
34	No. 8	Left-Front
36	No. 11	Right-Rear
38	No. 10	Left-Rear

TPMS CONTROL UNIT CONNECTOR A (14P)
Wire side of female terminals

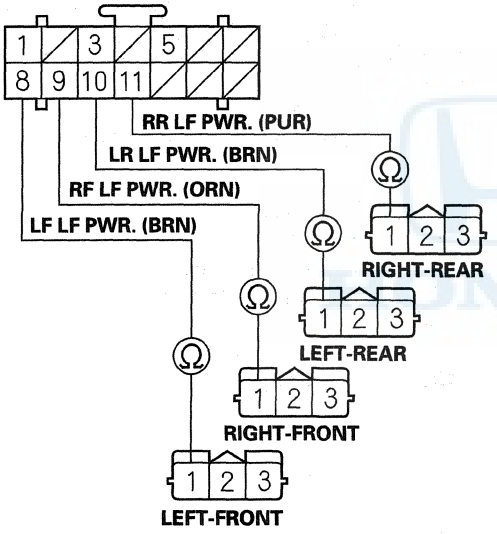

INITIATOR 3P CONNECTOR
Wire side of female terminals

Is there continuity?

YES—Go to step 27.

NO—Repair an open in the wire between the TPMS control unit and the appropriate initiator. ■

27. Check for continuity between the appropriate TPMS control unit connector B (20P) terminal and appropriate initiator 3P connector terminal No. 3 (see table).

DTC	TPMS Control Unit Connector B (20P) Terminal	Initiator Location
32	No. 14	Right-Front
34	No. 13	Left-Front
36	No. 16	Right-Rear
38	No. 15	Left-Rear

TPMS CONTROL UNIT CONNECTOR B (20P)
Wire side of female terminals

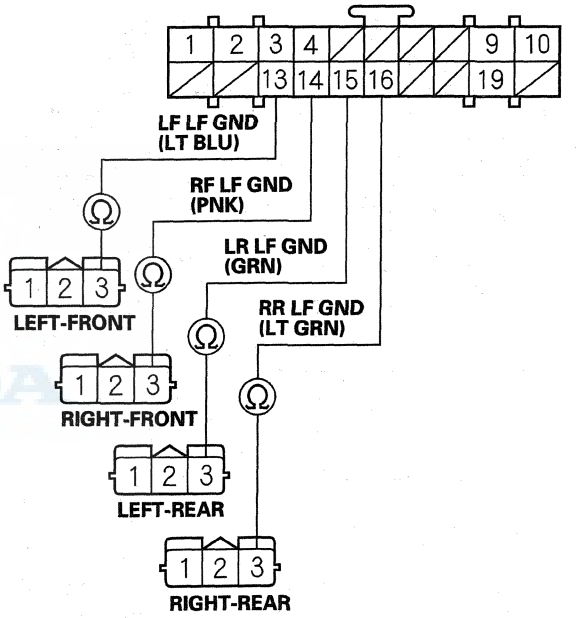

INITIATOR 3P CONNECTOR
Wire side of female terminals

Is there continuity?

YES—Go to step 28.

NO—Repair an open in the wire between the TPMS control unit and the appropriate initiator. ■

(cont'd)

DTC Troubleshooting (cont'd)

28. Check for continuity between the appropriate TPMS control unit connector B (20P) terminal and appropriate initiator 3P connector terminal No. 2 (see table).

DTC	TPMS Control Unit Connector B (20P) Terminal	Initiator Location
32	No. 1	Right-Front
34	No. 3	Left-Front
36	No. 2	Right-Rear
38	No. 4	Left-Rear

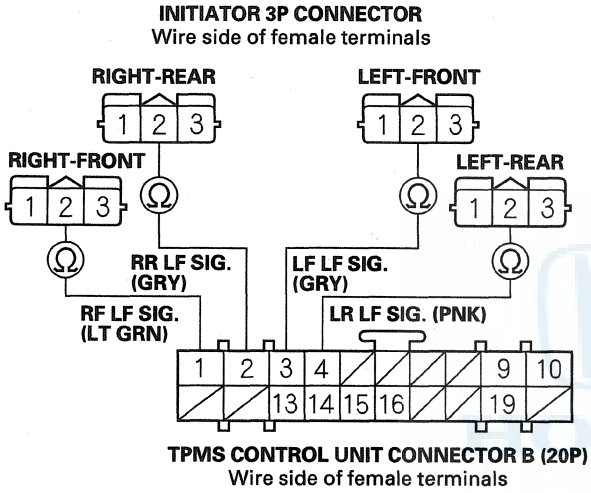

Is there continuity?

YES—Go to step 29.

NO—Repair an open in the wire between the TPMS control unit and the appropriate initiator. ■

29. Check for continuity between body ground and the appropriate TPMS control unit connector B (20P) terminal (see table).

DTC	TPMS Control Unit Connector B (20P) Terminal
32	No. 1
34	No. 3
36	No. 2
38	No. 4

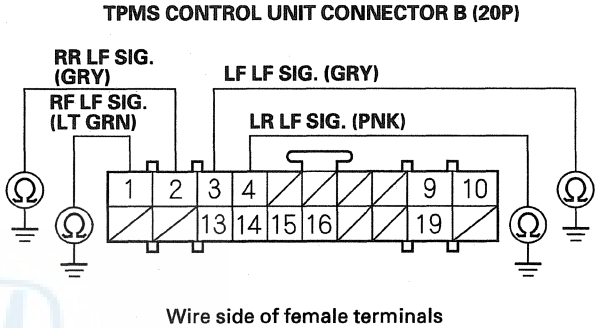

Is there continuity?

YES—Repair a short to body ground in the wire between the TPMS control unit and the appropriate initiator. ■

NO—Go to step 30.

30. Turn the ignition switch to ON (II).

31. Measure the voltage between body ground and the appropriate TPMS control unit connector B (20P) terminal (see table).

DTC	TPMS Control Unit Connector B (20P) Terminal
32	No. 1
34	No. 3
36	No. 2
38	No. 4

TPMS CONTROL UNIT CONNECTOR B (20P)

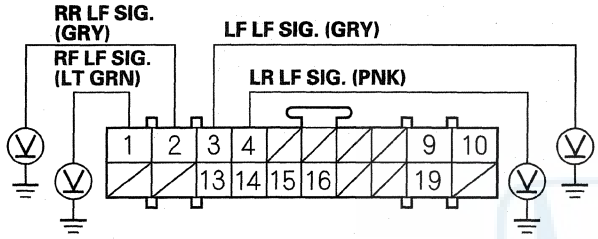

Wire side of female terminals

Is there battery voltage?

YES—Repair a short to power in the wire between the TPMS control unit and the appropriate initiator. ■

NO—Replace the TPMS control unit (see page 18-88). ■

DTC 41: Abnormal Signal Reception Error

NOTE:
- Inspect for an aftermarket electrical device(s) (such as an inverter, battery charger, etc) interfering with the RF signal from the sensors when turning the ignition switch is ON (II).
- If DTC 32, 34, 36, or 38 is also set, troubleshoot those DTCs first.

1. Turn the ignition switch to LOCK (0).

2. Check all four wheels to make sure they are the TPMS type with the tire pressure sensor.

   Is each wheel a TPMS type with a tire pressure sensor mounted on the vehicle?

   YES—Go to step 3.

   NO—Install a TPMS type wheel, and memorize the sensor ID. Drive the vehicle above 15 mph (24 km/h) continuously for 40 seconds, or memorize the ID with the HDS (see page 18-51). ■

3. Test-drive the vehicle.

4. Check the VEHICLE SPEED in the TPMS DATA LIST with the HDS.

   Is the vehicle speed indicated?

   YES—Go to step 8.

   NO—Go to step 5.

5. Turn the ignition switch to LOCK (0).

6. Turn the ignition switch to ON (II).

(cont'd)

DTC Troubleshooting (cont'd)

7. Check for DTCs with the HDS.

   Is DTC 85 indicated?

   YES—Go to the DTC 85 troubleshooting (see page 18-78). ■

   NO—Check for loose terminals and poor connections at the TPMS control unit. If necessary, substitute a known-good TPMS control unit (see page 18-88), and recheck. ■

8. Turn the ignition switch to LOCK (0).

9. Turn the ignition switch to ON (II).

10. Check the TPMS DATA LIST for LF, RF, LR, and RR TIRE PRESSURE SENSOR STATUS changes to NORMAL with the HDS.

    NOTE: If UNDEFINED is shown on the sensor transmitter status, turn the ignition switch to LOCK (0), rotate the tire 1/4 turn, then turn the ignition switch to ON (II), and try again. If UNDEFINED is still displayed, repeat the procedure in the previous sentence until NORMAL is shown.

    Is NORMAL indicated within one full turn of the tire?

    YES—The system is OK at this time. Clear the DTC with the HDS. ■

    NO—Check for loose terminals and poor connections at the TPMS control unit. If necessary, substitute a known-good TPMS control unit (see page 18-88), and recheck. ■

DTC 45: Initiator Circuit Short Detection

1. Turn the ignition switch to ON (II).
2. Clear the DTC with the HDS.
3. Turn the ignition switch to LOCK (0), then turn it to ON (II) again.
4. Check for DTCs with the HDS.

   Is DTC 45 indicated?

   YES—Go to step 5.

   NO—The system is OK at this time. ■

5. Turn the ignition switch to LOCK (0).
6. Disconnect TPMS control unit connector A (14P) and B (20P).
7. Check for continuity between body ground and the appropriate TPMS control unit connector A (14P) terminal.

Terminal Name	TPMS Control Unit Connector A (14P) Terminal
RF LF PWR.	No. 9
LF LF PWR.	No. 8
RR LF PWR.	No. 11
LR LF PWR.	No. 10

TPMS CONTROL UNIT CONNECTOR A (14P)

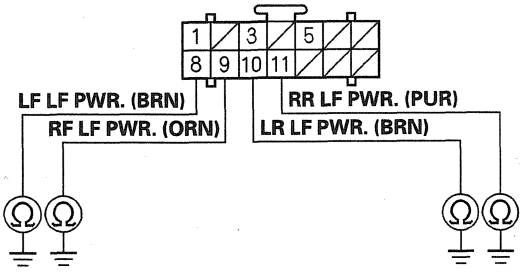

Wire side of female terminals

Is there continuity?

YES—Go to step 8.

NO—Go to step 10.

8. Disconnect the appropriate initiator 3P connector.

9. Check for continuity between body ground and the appropriate TPMS control unit connector A (14P) terminal.

Terminal Name	TPMS Control Unit Connector A (14P) Terminal
RF LF PWR.	No. 9
LF LF PWR.	No. 8
RR LF PWR.	No. 11
LR LF PWR.	No. 10

TPMS CONTROL UNIT CONNECTOR A (14P)

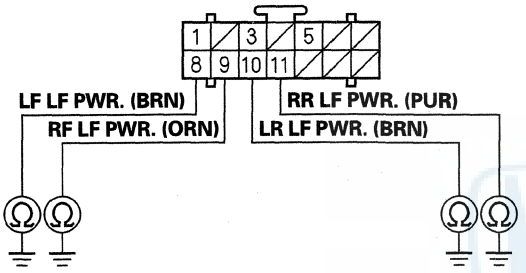

Wire side of female terminals

Is there continuity?

YES—Repair a short to body ground in the wire between the TPMS control unit and the appropriate initiator. ■

NO—Replace the appropriate initiator (see page 18-84). ■

10. Check for continuity between the appropriate TPMS control unit connector A (14P) and connector B (20P) terminals.

Tire Location	TPMS Control Unit	
	Connector A (14P) Terminal	Connector B (20P) Terminal
Right-front	RF LF PWR./ No. 9	RF LF GND/ No. 14
Left-front	LF LF PWR./ No. 8	LF LF GND/ No. 13
Right-rear	RR LF PWR./ No. 11	RR LF GND/ No. 16
Left-rear	LR LF PWR./ No. 10	LR LF GND/ No. 15

TPMS CONTROL UNIT CONNECTOR A (14P)

Wire side of female terminals

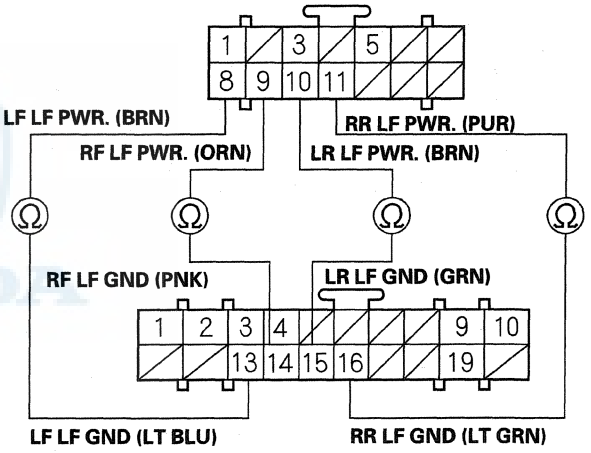

TPMS CONTROL UNIT CONNECTOR B (20P)

Wire side of female terminals

Is there continuity?

YES—Go to step 11.

NO—Go to step 13.

(cont'd)

DTC Troubleshooting (cont'd)

11. Disconnect the appropriate initiator 3P connector.

12. Check for continuity between the appropriate TPMS control unit connector A (14P) and connector B (20P) terminals.

Tire Location	TPMS Control Unit	
	Connector A (14P) Terminal	Connector B (20P) Terminal
Right-front	RF LF PWR./ No. 9	RF LF GND/ No. 14
Left-front	LF LF PWR./ No. 8	LF LF GND/ No. 13
Right-rear	RR LF PWR./ No. 11	RR LF GND/ No. 16
Left-rear	LR LF PWR./ No. 10	LR LF GND/ No. 15

TPMS CONTROL UNIT CONNECTOR A (14P)

Wire side of female terminals

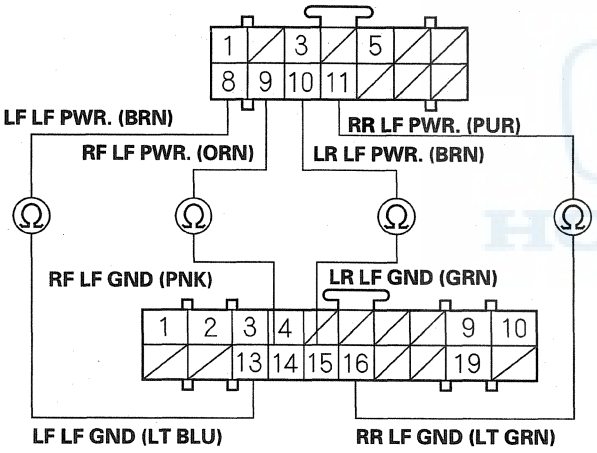

TPMS CONTROL UNIT CONNECTOR B (20P)

Wire side of female terminals

Is there continuity?

YES—Repair a short in the wire between the TPMS control unit and the appropriate initiator. ■

NO—Replace the appropriate initiator (see page 18-84). ■

13. Turn the ignition switch to ON (II).

14. Measure the voltage between body ground and the appropriate TPMS control unit connector B (20P) terminal.

Terminal Name	TPMS Control Unit Connector B (20P) Terminal
RF LF GND.	No. 14
LF LF GND.	No. 13
RR LF GND.	No. 16
LR LF GND.	No. 15

TPMS CONTROL UNIT CONNECTOR B (20P)

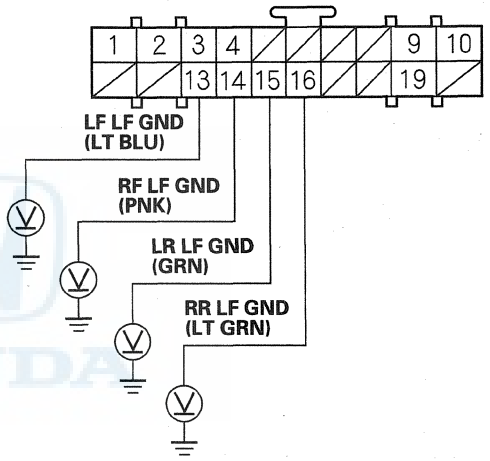

Wire side of female terminals

Is there battery voltage?

YES—Repair a short to power in the wire between the TPMS control unit and the appropriate initiator. ■

NO—Check for loose terminals and poor connections at the TPMS control unit. If necessary, substitute a known-good TPMS control unit (see page 18-88) and recheck. ■

DTC 51, 53, 55, 57: Tire Pressure Sensor Registration Error

NOTE: These DTCs will only set during initialization with the HDS.

1. Turn the ignition switch to ON (II).
2. Check the DTC indicated to the tire location to make sure the wheel is a TPMS type with the tire pressure sensor.

DTC	Tire Location
51	Right-front
53	Left-front
55	Right-rear
57	Left-rear

Is a TPMS type wheel with a tire pressure sensor mounted on the vehicle?

YES—Go to step 3.

NO—Install a TPMS type wheel, and memorize the sensor ID. Drive the vehicle above 15 mph (24 km/h) continuously for 40 seconds, or memorize the ID with the HDS (see page 18-51). ■

3. Turn the ignition switch to LOCK (0).
4. Turn the ignition switch to ON (II).
5. Check the TPMS DATA LIST for RF, LF, RR, or LR TIRE PRESSURE SENSOR STATUS changes to NORMAL with the HDS.

   NOTE: If UNDEFINED is shown on the sensor transmitter status, turn the ignition switch to LOCK (0), rotate the tire 1/4 turn, then turn the ignition switch to ON (II), and try again. If UNDEFINED is still displayed, repeat the procedure in the previous sentence until NORMAL is shown.

DTC	Tire Location
51	Right-front
53	Left-front
55	Right-rear
57	Left-rear

Is NORMAL indicated within one full turn of the tire?

YES—The system is OK at this time. Clear the DTC with the HDS. ■

NO—Go to step 6.

6. Turn the ignition switch to LOCK (0).
7. Substitute a wheel with a known-good tire pressure sensor on the vehicle (see page 18-85).
8. To memorize the sensor ID, drive the vehicle above 15 mph (24 km/h) continuous for 40 seconds, or memorize the ID with the HDS (see page 18-51).
9. Turn the ignition switch to LOCK (0).
10. Turn the ignition switch to ON (II).

(cont'd)

DTC Troubleshooting (cont'd)

11. Check the TPMS DATA LIST for RF, LF, RR, or LR TIRE PRESSURE SENSOR STATUS changes to NORMAL with the HDS.

    NOTE: If UNDEFINED is shown on the sensor transmitter status, turn the ignition switch to LOCK (0), rotate the tire 1/4 turn, then turn the ignition switch to ON (II), and try again. If UNDEFINED is still displayed, repeat the procedure in the previous until NORMAL is shown.

DTC	Tire Location
51	Right-front
53	Left-front
55	Right-rear
57	Left-rear

    Is NORMAL indicated within one full turn of the tire?

    YES—Replace the tire pressure sensor on the client's wheel (see page 18-85). ■

    NO—Go to step 12.

12. Turn the ignition switch to LOCK (0).

13. Substitute an initiator from a known-good location on the current vehicle, or from another known-good vehicle (see page 18-84).

14. Turn the ignition switch to ON (II).

15. Check the TPMS DATA LIST for RF, LF, RR, and LR TIRE PRESSURE SENSOR STATUS changes to NORMAL with the HDS.

    NOTE: If UNDEFINED is shown on the sensor transmitter status, turn the ignition switch to LOCK (0), rotate the tire 1/4 turn, then turn the ignition switch to ON (II), and try again. If UNDEFINED is still displayed, repeat the procedure in the previous sentence until NORMAL is shown.

DTC	Tire Location
51	Right-front
53	Left-front
55	Right-rear
57	Left-rear

    Is NORMAL indicated within one full turn of the tire?

    YES—Replace the appropriate initiator (see page 18-84). ■

    NO—Go to step 16.

16. Turn the ignition switch to LOCK (0).

17. Disconnect the appropriate initiator 3P connector.

DTC	Initiator Location
51	Right-front
53	Left-front
55	Right-rear
57	Left-rear

18. Disconnect the TPMS control unit connector A (14P) and B (20P).

19. Check for continuity between the appropriate TPMS control unit connector A (14P) terminal and appropriate initiator 3P connector terminal No. 1 (see table).

DTC	TPMS Control Unit Connector A (14P) Terminal	Initiator Location
51	No. 9	Right-Front
53	No. 8	Left-Front
55	No. 11	Right-Rear
57	No. 10	Left-Rear

TPMS CONTROL UNIT CONNECTOR A (14P)
Wire side of female terminals

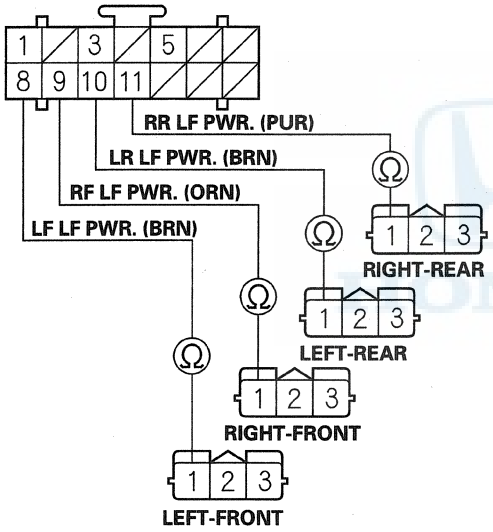

INITIATOR 3P CONNECTOR
Wire side of female terminals

Is there continuity?

YES—Go to step 20.

NO—Repair an open in the wire between the TPMS control unit and the appropriate initiator. ■

20. Check for continuity between the appropriate TPMS control unit connector B (20P) terminal and appropriate initiator 3P connector terminal No. 3 (see table).

DTC	TPMS Control Unit Connector B (20P) Terminal	Initiator Location
51	No. 14	Right-Front
53	No. 13	Left-Front
55	No. 16	Right-Rear
57	No. 15	Left-Rear

TPMS CONTROL UNIT CONNECTOR B (20P)
Wire side of female terminals

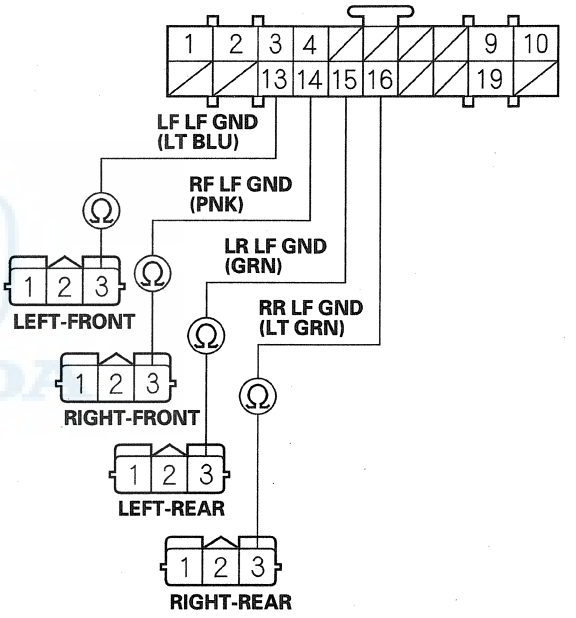

INITIATOR 3P CONNECTOR
Wire side of female terminals

Is there continuity?

YES—Go to step 21.

NO—Repair an open in the wire between the TPMS control unit and the appropriate initiator. ■

(cont'd)

DTC Troubleshooting (cont'd)

21. Check for continuity between the appropriate TPMS control unit connector B (20P) terminal and appropriate initiator 3P connector terminal No. 2 (see table).

DTC	TPMS Control Unit Connector B (20P) Terminal	Initiator Location
51	No. 1	Right-Front
53	No. 3	Left-Front
55	No. 2	Right-Rear
57	No. 4	Left-Rear

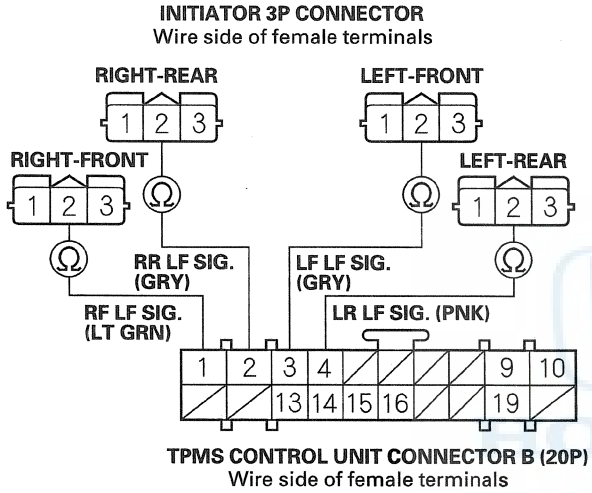

Is there continuity?

YES—Go to step 22.

NO—Repair an open in the wire between the TPMS control unit and the appropriate initiator.■

22. Check for continuity between body ground and the appropriate TPMS control unit connector B (20P) terminal (see table).

DTC	TPMS Control Unit Connector B (20P) Terminal
51	No. 1
53	No. 3
55	No. 2
57	No. 4

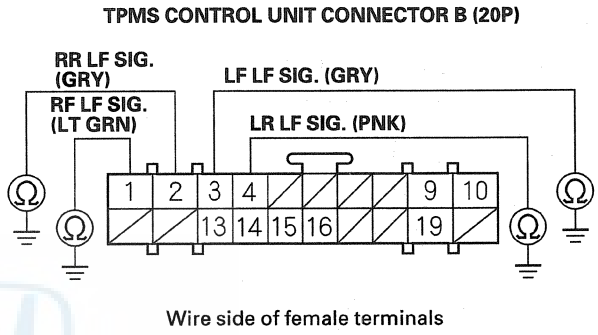

Is there continuity?

YES—Repair a short to body ground in the wire between the TPMS control unit and the appropriate initiator.■

NO—Go to step 23.

23. Turn the ignition switch to ON (II).

24. Measure the voltage between body ground and the appropriate TPMS control unit connector B (20P) terminal (see table).

DTC	TPMS Control Unit Connector B (20P) Terminal
51	No. 1
53	No. 3
55	No. 2
57	No. 4

TPMS CONTROL UNIT CONNECTOR B (20P)

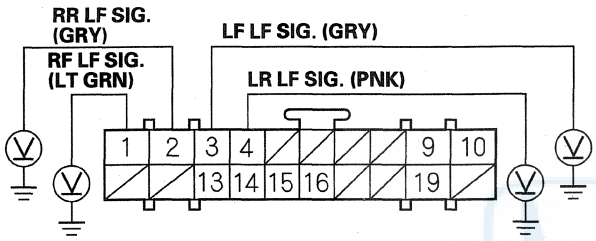

Wire side of female terminals

Is there battery voltage?

YES—Repair a short to power in the wire between the TPMS control unit and the appropriate initiator. ■

NO—Repair the TPMS control unit (see page 18-88). ■

DTC 81: TPMS Control Unit Failure (RAM/ROM/ADC/EEPROM/ALU) Check

NOTE: Low battery voltage can cause this DTC. Make sure the battery is fully charged and in good condition.

1. Turn the ignition switch to ON (II).

2. Clear the DTC with the HDS.

3. Turn the ignition switch to LOCK (0), then turn the ignition switch to ON (II) again.

4. Check for DTCs with the HDS.

Is DTC 81 indicated?

YES—Replace the TPMS control unit (see page 18-88). ■

NO—The system is OK at this time. Check for loose terminals and poor conditions at the TPMS control unit and G602. ■

DTC Troubleshooting (cont'd)

DTC 83: No VSP Signal

NOTE: Check the fuel and emission systems DTCs with the HDS, and troubleshoot the PCM and F-CAN communication errors first (see page 11-3).

1. Turn the ignition switch to ON (II).
2. Clear the DTC with the HDS.
3. Test-drive the vehicle.
4. Check for DTCs with the HDS.

   Is DTC 83 indicated?

   YES—Go to step 5.

   NO—The system is OK at this time. ■
5. Check for DTCs with the HDS.

   Is DTC 85 indicated?

   YES—Go to DTC 85 troubleshooting (see page 18-78). ■

   NO—Go to step 6.
6. Test-drive the vehicle, and check the VEHICLE SPEED in the TPMS DATA LIST with the HDS.

   Is the vehicle speed indicated?

   YES—Check for loose terminals and poor connections at the TPMS control unit. If necessary, substitute a known-good TPMS control unit (see page 18-88), and recheck. ■

   NO—Go to step 7.
7. Check the speedometer.

   Does the speedometer register speed?

   YES—Replace the TPMS control unit (see page 18-88). ■

   NO—Update the PCM if it does not have the latest software (see page 11-230), or substitute a known-good PCM (see page 11-7), then go to step 1 and recheck. If the PCM was updated and DTCs are not indicated, troubleshooting is complete. If the PCM was substituted and DTCs and not indicated, replace the original PCM (see page 11-232). ■

DTC 85: F-CAN Communication Failure

NOTE: Check the fuel and emission systems DTCs with the HDS, and troubleshoot the PCM and F-CAN communication errors first (see page 11-3).

1. Turn the ignition switch to ON (II).
2. Clear the DTC with the HDS.
3. Turn the ignition switch to LOCK (0), then turn the ignition switch to ON (II) again.
4. Wait about 5 seconds.
5. Check for DTCs with the HDS.

   Is DTC 85 indicated?

   YES—Go to step 6.

   NO—The system is OK at this time. ■
6. Test-drive the vehicle.

   Does the speedometer work?

   YES—Go to step 10.

   NO—Go to step 7.
7. Turn the ignition switch to LOCK (0).
8. Disconnect the TPMS control unit connector B (20P).
9. Test-drive the vehicle.

   Does the speedometer work?

   YES—Check for loose terminals and poor connections at the TPMS control unit. If necessary, substitute a known-good TPMS control unit (see page 18-88), and recheck. ■

   NO—Turn the ignition switch to LOCK (0), and reconnect all connectors, then check and troubleshoot the fuel and emissions systems (see page 11-3). ■

10. Turn the ignition switch to LOCK (0).
11. Short the SCS line with the HDS.
12. Disconnect PCM connector E (31P).
13. Disconnect the TPMS control unit connector B (20P).
14. Check for continuity between the TPMS control unit connector B (20P) terminals and the PCM connector E (31P) terminals individually (see table).

Terminal name	TPMS Control Unit Connector B (20P) Terminal	PCM Connector E (31P) Terminal
CANL	No. 10	No. 26
CANH	No. 19	No. 15

TPMS CONTROL UNIT CONNECTOR B (20P)
Wire side of female terminals

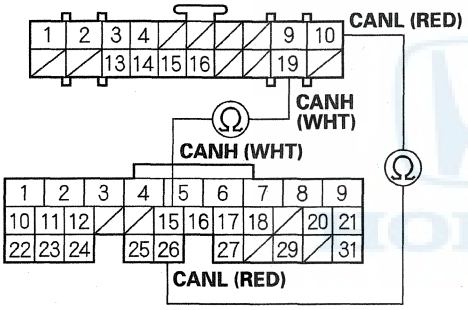

PCM CONNECTOR E (31P)
Wire side of female terminals

Is there continuity?

YES—Check for loose terminals and poor connections at the TPMS control unit. If necessary, substitute a known-good TPMS control unit (see page 18-88), and recheck. ■

NO—Repair an open in the wire between the TPMS control unit and the PCM. ■

DTC 91, 93, 95, 97: Tire Pressure Sensor Internal Error

1. Turn the ignition switch to ON (II).
2. Clear the DTC with the HDS.
3. Turn the ignition switch to LOCK (0), then turn the ignition switch to ON (II) again.
4. Wait about 1 minute.
5. Check for DTCs with the HDS.

NOTE: The tire pressure sensor of the appropriate wheel is shown.

DTC	Tire Location
91	Right-front
93	Left-front
95	Right-rear
97	Left-rear

Is DTC 91, 93, 95 or 97 indicated?

YES—Replace the appropriate tire pressure sensor (see page 18-85). ■

NO—The system is OK at this time. ■

Symptom Troubleshooting

Low tire pressure indicator does not come on, and no DTCs are stored

1. Turn the ignition switch to ON (II), and check the low tire pressure indicator for several seconds.

   Did the indicator come on, and then go off?

   YES—Go to step 2.

   NO—Do the self-diagnostic function for the gauge control module (see page 22-396). If necessary, substitute a known-good gauge control module (see page 22-419), and recheck. ■

2. Lower the pressure in each tire until the low tire pressure indicator comes on.

   Does the indicator come on when the pressure drops below: 168 kPa (1.7 kgf/cm², 24 psi) or less?

   YES—The system is OK at this time. ■

   NO—Go to step 3.

3. Check the TIRE PRESSURE in the TPMS DATA LIST with the HDS, and compare it with the actual measured the pressure.

   NOTE: If UNDEFINED is shown on the sensor transmitter status, turn the ignition switch to LOCK (0), rotate the appropriate tire 1/4 turn, then turn the ignition switch to ON (II), and try again. If UNDEFINED is still displayed, repeat the procedure in the previous sentence until NORMAL is shown.

   Is the indicated tire pressure on the HDS within 40 kPa (0.4 kgf/cm², 6 psi) of the actual tire pressure?

   YES—Check for loose terminals and poor connections at the TPMS control unit. If necessary, substitute a known-good TPMS control unit (see page 18-88), and recheck. ■

   NO—Replace the tire pressure sensor (see page 18-85). ■

Low tire pressure indicator does not go off, and no DTCs are stored

NOTE: If the low tire pressure indicator is turned on at the same time as the TPMS indicator, go to the following TPMS symptom troubleshooting first: TPMS indicator does not go off, and no DTCs are stored (see page 18-81).

1. Turn the ignition switch to ON (II).

2. Check the low tire pressure indicator for several seconds when the ignition switch is turned ON (II).

   Did the indicator come on and then blink for about 75 seconds?

   YES—Check for gauge control module DTCs with the HDS (see page 22-6), and do to the indicated gauge control module DTCs troubleshooting. ■

   NO—Go to step 3.

3. Turn the ignition switch to LOCK (0).

4. Disconnect the TPMS control unit connector B (20P).

5. Turn the ignition switch to ON (II).

6. Check the low tire pressure indicator for several seconds when the ignition switch is turned ON (II).

   Did the indicator come on and then blink for about 75 seconds?

   YES—Check for loose terminals and poor connections at the TPMS control unit. If necessary, substitute a known-good TPMS control unit (see page 18-88), and recheck. ■

   NO—Do the self-diagnostic function for the gauge control module (see page 22-396). If necessary, substitute a known-good gauge control module (see page 22-419), and recheck. ■

TPMS indicator does not come on, and no DTCs are stored

1. Turn the ignition switch to LOCK (0).
2. Disconnect TPMS control unit connector B (20P).
3. Turn the ignition switch to ON (II).
4. Check the TPMS indicator when the ignition switch is turned ON (II).

   Did the indicator come on?

   YES—Check for loose terminals and poor connections at the TPMS control unit. If necessary, substitute a known-good TPMS control unit (see page 18-88), and recheck. ■

   NO—Do the self-diagnostic function for the gauge control module (see page 22-396). If necessary, substitute a known-good gauge control module (see page 22-419), and recheck. ■

TPMS indicator does not go off, and no DTCs are stored

NOTE:
- Check for gauge control module DTCs with the HDS (see page 22-6). If the multiple DTCs are present, including B1178, troubleshoot those DTCs first. If only DTC B1178 is present, continue with the following troubleshooting.
- If the TPMS control unit was replaced, the TPMS indicator will be on until all four sensor ID codes are learned.

1. Turn the ignition switch to LOCK (0).
2. Check the No. 15 (7.5 A) fuse in the driver's under-dash fuse/relay box.

   Is the fuse blown?

   YES—Go to step 3.

   NO—Reinstall the checked fuse, then go to step 5.

3. Disconnect the TPMS control unit connector A (14P).
4. With the No. 15 (7.5 A) fuse removed, check for continuity between body ground and the TPMS control unit connector A (14P) terminal No. 1.

TPMS CONTROL UNIT CONNECTOR A (14P)

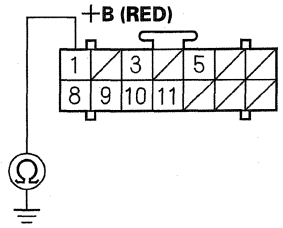

Wire side of female terminals

Is there continuity?

YES—Repair a short to body ground in the wire between the No. 15 (7.5 A) fuse in the driver's under-dash fuse/relay box and the TPMS control unit. ■

NO—Install a new No. 15 (7.5 A) fuse in the driver's under-dash fuse/relay box, then go to step 10.

(cont'd)

Symptom Troubleshooting (cont'd)

5. Check the No. 21 (10 A) fuse in the driver's under-dash fuse/relay box.

   Is the fuse blown?

   YES—Go to step 6.

   NO—Reinstall the checked fuse, then go to step 12.

6. Disconnect the TPMS control unit connector A (14P).

7. With the No. 21 (10 A) fuse removed, turn the ignition switch to ON (II).

8. Check for continuity between body ground and the TPMS control unit connector A (14P) terminal No. 5.

TPMS CONTROL UNIT CONNECTOR A (14P)

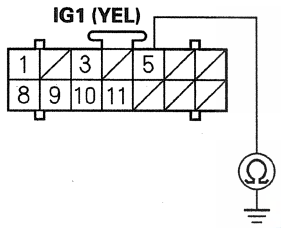

Wire side of female terminals

Is there continuity?

YES—Repair a short to body ground in the wire between the No. 21 (10 A) fuse in the driver's under-dash fuse/relay box and the TPMS control unit. ■

NO—Install a new No. 21 (10 A) fuse in the driver's under-dash fuse/relay box, then go to step 9.

9. Turn the ignition switch to LOCK (0).

10. Turn the ignition switch to ON (II).

11. Check the TPMS indicator for several seconds when the ignition switch is turned ON (II).

    Did the indicator come on, and then go off?

    YES—Troubleshooting is complete. ■

    NO—Check for loose terminals and poor connections at the TPMS control unit. If necessary, substitute a known-good TPMS control unit (see page 18-88), and recheck. ■

12. Disconnect the TPMS control unit connector A (14P).

13. Measure the voltage between body ground and TPMS control unit connector A (14P) terminal No. 1.

TPMS CONTROL UNIT CONNECTOR A (14P)

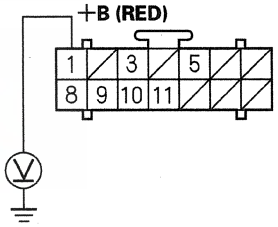

Wire side of female terminals

Is there battery voltage?

YES—Go to step 14.

NO—Repair an open in the wire between the TPMS control unit and the No. 15 (7.5 A) fuse in the driver's under-dash fuse/relay box. ■

14. Turn the ignition switch to ON (II).

15. Measure the voltage between body ground and TPMS control unit connector A (14P) terminal No. 5.

TPMS CONTROL UNIT CONNECTOR A (14P)

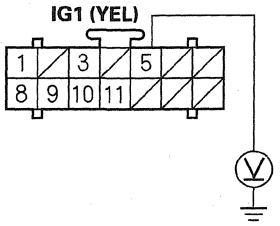

Wire side of female terminals

Is there battery voltage?

YES—Go to step 16.

NO—Repair an open in the wire between the TPMS control unit and the No. 21 (10 A) fuse in the driver's under-dash fuse/relay box. ■

16. Turn the ignition switch to LOCK (0).

17. Reconnect the TPMS control unit connector A (14P).

18. Turn the ignition switch to ON (II).

19. Measure the voltage between body ground and TPMS control unit connector A (14P) terminal No. 3.

TPMS CONTROL UNIT CONNECTOR A (14P)

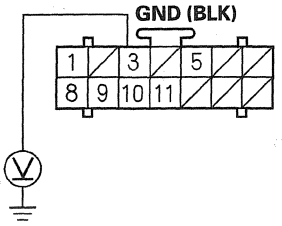

Wire side of female terminals

Is there 0.1 V or more?

YES—Repair an open or high resistance in the wire between the TPMS control unit and body ground (G602). ■

NO—Do the self-diagnostic function for the gauge control module (see page 22-396). If the gauge control module is OK, check for loose terminals and poor connections at the TPMS control unit. If necessary, substitute a known-good TPMS control (see page 18-88), and recheck. ■

Initiator Replacement

Front

NOTE: Make sure the initiator mounting bracket is not bent or twisted as this may affect its communication with the TPMS control unit and the tire pressure sensor.

1. Make sure the ignition switch is in LOCK (0).
2. Raise the front of the vehicle, and support it with safety stands in the proper locations (see page 1-8).
3. Remove the wheel nuts, and the front wheel, taking care to scratch the caliper.
4. Remove the front inner fender (see page 20-176).
5. Disconnect the initiator connector (A).

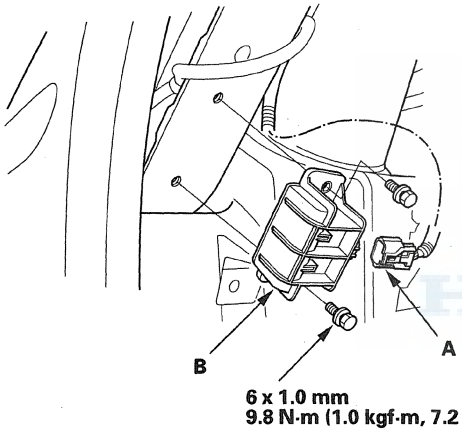

6. Remove the initiator (B) from the bracket.
7. Install the initiator in the reverse order of removal.

Rear

1. Make sure the ignition switch is in LOCK (0).
2. Raise the rear of the vehicle, and support it with safety stands in the proper locations (see page 1-8).
3. Remove the wheel nuts, and the rear wheel, taking care not to scratch the caliper.
4. Remove the rear inner fender cover (see page 20-179).
5. Disconnect the initiator connector (A).

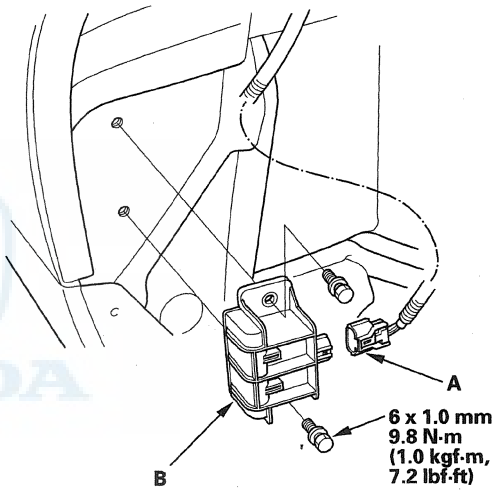

6. Remove the initiator (B) from the inner side of the wheel well.
7. Install the initiator in the reverse order of removal.

Tire Pressure Sensor Replacement

Removal

NOTICE

Each TPMS sensor contains a lithium anode battery that is not removable. The complete TPMS sensor should be disposed of according to local battery disposal guidelines or requirements. An improperly disposed battery can be harmful to the environment.

1. Raise the vehicle on a lift (see page 1-8).
2. Remove the wheel with the faulty sensor.
3. Remove the tire valve cap and the valve core, and let the tire deflate.
4. Remove any balance weights, and then break the bead loose from the wheel with a commercially available tire changer (A).

NOTICE

Note these items to avoid damaging the tire pressure sensor:

- Do the outside of the wheel first.
- Position the wheel as shown so the valve stem (B) is 90 degrees from the bead breaker (C) as shown.
- Do not position the bead breaker of the tire changer too close to the rim.

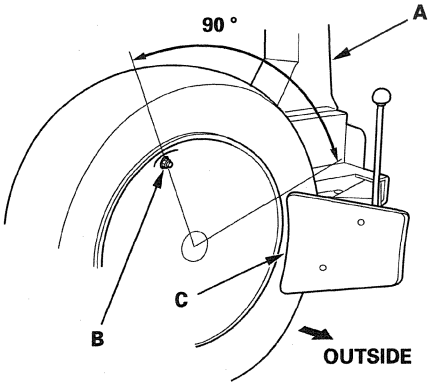

5. Position the wheel so that the tire machine (A) and the tire iron (B) are next to the valve stem (C) and will move away from it when the machine starts. Then remove the tire from the wheel.

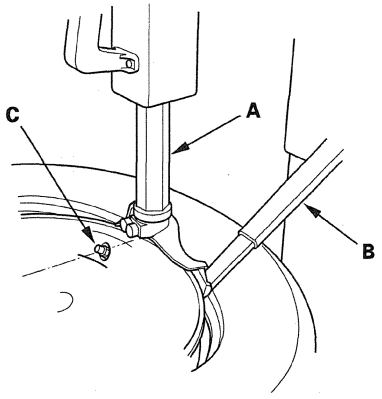

6. Remove the valve stem nut (A), then remove the tire pressure sensor with the valve stem (B) from the wheel.

NOTE: Check the nut, if they have deterioration or damage, replace them with new ones during reassembly.

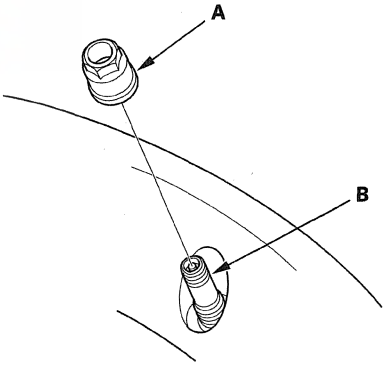

(cont'd)

Tire Pressure Sensor Replacement (cont'd)

7. Remove and replace the valve stem (A), and the screw (B) from the tire pressure sensor (C).

   NOTE: The valve stem grommet (D) might stay in the wheel; make sure you remove it.

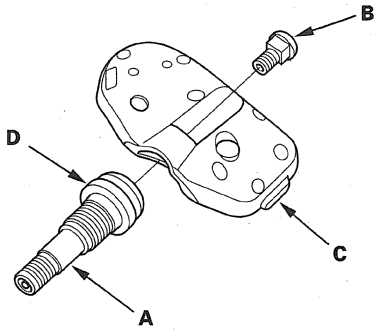

Installation

NOTE: Use only wheels that have a "TPMS" mark (A) on them.

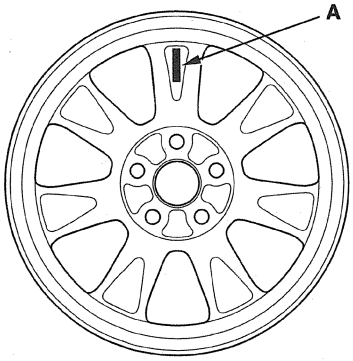

1. Assemble a new valve stem (A), a new screw (B), and a sensor-transmitter (C).

   NOTE: Always use a new valve stem and a new screw.

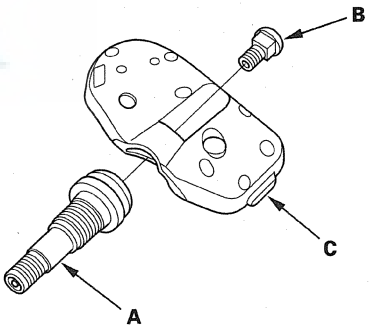

2. Before installing the tire pressure sensor, clean the mating surfaces on the sensor and the wheel.

3. Install the tire pressure sensor (A) to the wheel (B), and tighten the valve stem nut (C) finger tight. Make sure the pressure sensor is resting on the wheel.

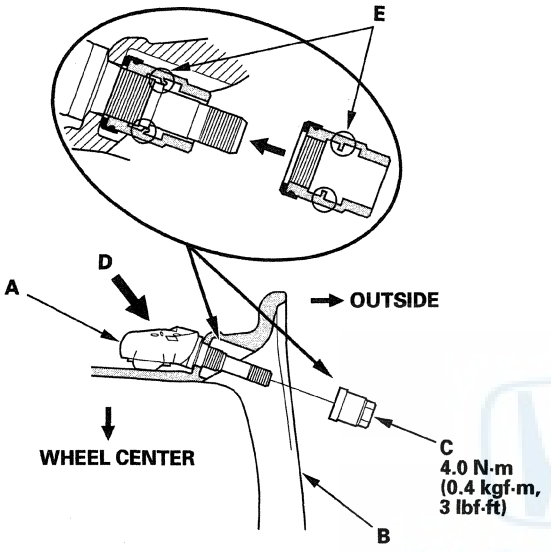

4. Tighten the valve nut to the specified torque while holding the tire pressure sensor toward (D) the wheel. You may hear a snap or pop as you tighten the nut. This is normal.

   NOTE:
   - Do not reuse the nuts that had been tightened, even one time, to the specified torque, as they are deformed inside (E).
   - Do not use air or electric impact tools to tighten a valve stem nut.
   - Tightening the nut beyond the specified torque can damage the nut.
   - Make sure that there is no space between the sensor and the wheel.

5. Lube the tire bead sparingly, and position the wheel so that the tire machine (A) are next to the valve stem (B) and will move away from it when the machine starts. Then install the tire onto the wheel.

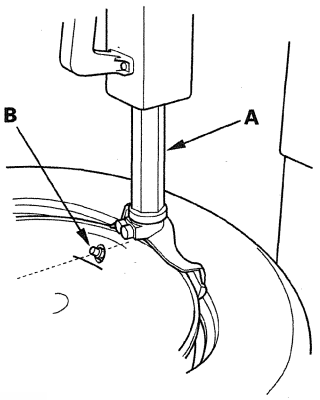

6. With a dry air source, inflate the tire to 300 kPa (3.1 kgf/cm², 44 psi) to seat the tire bead to the rim, then adjust the tire pressure to front 220 kPa (2.2 kgf/cm², 32 psi), rear 210 kPa (2.1 kgf/cm², 30 psi), and install the valve stem cap.

   NOTE: Make sure the tire bead is seated on both sides of the rim uniformly.

7. Check and adjust the wheel balance, then install the wheels to the vehicle.

8. Lower the vehicle. Torque the wheel nuts to specifications (see page 18-12).

9. Connect the HDS, and memorize the pressure sensor ID(s) (see page 18-51).

TPMS Control Unit Replacement

NOTE: Make sure the TPMS control unit mounting base is not bent or twisted as this may affect communication with the indicators and the tire pressure sensors.

1. Make sure the ignition switch is in LOCK (0).
2. Remove the rear shelf (see page 20-80).
3. Disconnect the TPMS control unit connectors (A).

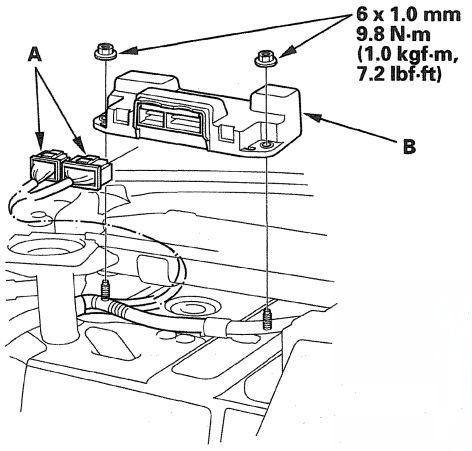

4. Remove the TPMS control unit (B).
5. Install the TPMS control unit in the reverse order of removal.
6. Connect the HDS, and memorize the pressure sensor IDs (see page 18-51). Do not memorize the IDs automatically.

Brakes

Conventional Brake Components

Special Tools 19-2
Component Location Index 19-3
Brake System Inspection and Test 19-4
Symptom Troubleshooting 19-5
Brake Pedal and Brake Pedal Position Switch Adjustment 19-6
Parking Brake Inspection and Adjustment 19-7
Brake System Bleeding 19-9
Brake System Indicator Circuit Diagram 19-10
Parking Brake Switch Test 19-11
Brake Fluid Level Switch Test 19-11
Front Brake Pad Inspection and Replacement 19-12
Front Brake Disc Inspection 19-14
Front Brake Disc Replacement 19-17
Front Brake Caliper Overhaul 19-18
Master Cylinder Replacement 19-19
Master Cylinder Inspection 19-20
Brake Booster Test 19-20
Brake Booster Pushrod Clearance Adjustment 19-22
Brake Booster Replacement 19-23
Rear Brake Pad Inspection and Replacement 19-24
Rear Brake Disc Inspection 19-27
Rear Brake Disc Replacement 19-29
Rear Brake Caliper Overhaul 19-31
Parking Brake Inspection 19-32
Parking Brake Shoe Replacement 19-34
Parking Brake Shoe Lining Break-in 19-37
Brake Pedal Replacement 19-37
Brake Hose and Line Inspection 19-38
Brake Hose Replacement 19-39
Parking Brake Cable Replacement 19-40

VSA (Vehicle Stability Assist) System Components 19-43

Conventional Brake Components

Special Tools

Ref. No.	Tool Number	Description	Qty
①	07AAE-SEPA101	Brake Caliper Piston Compressor	1
②	070AB-SJA0100	Booster Piston Holder	1

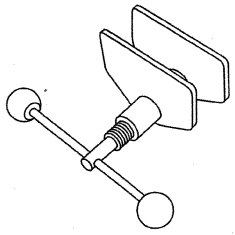

①

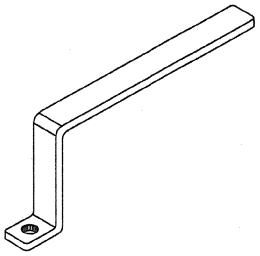

②

HONDA

Component Location Index

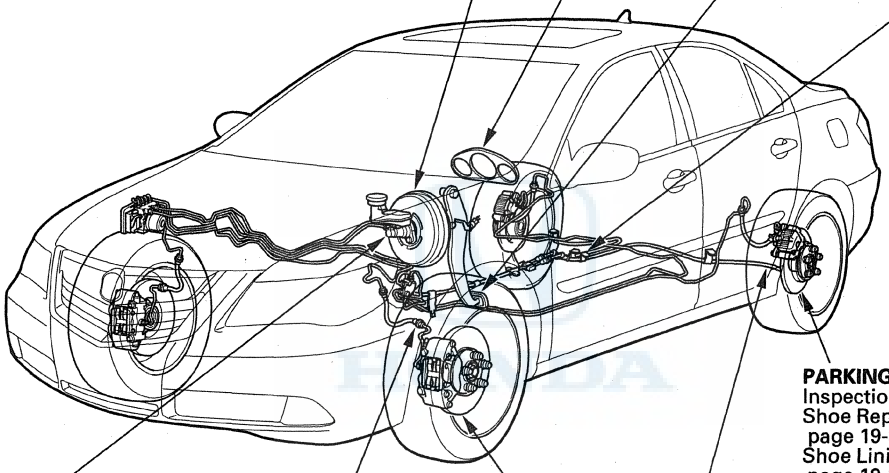

BRAKE BOOSTER
Test, page 19-20
Replacement, page 19-23

BRAKE SYSTEM INDICATOR
Circuit Diagram, page 19-10
Parking Brake Switch Test, page 19-11
Brake Fluid Level Switch Test, page 19-11

BRAKE PEDAL
Brake Pedal and Brake Pedal Position Switch Adjustment, page 19-6
Replacement, page 19-37

PARKING BRAKE
Inspection and Adjustment, page 19-7
Cable Replacement, page 19-40

PARKING DRUM BRAKE
Inspection, page 19-32
Shoe Replacement, page 19-34
Shoe Lining Break-in, page 19-37

MASTER CYLINDER
Brake System Bleeding, page 19-9
Replacement, page 19-19
Inspection, page 19-20

BRAKE HOSE and LINE
Inspection, page 19-38
Replacement, page 19-39

REAR DISC BRAKE
Pad Inspection and Replacement, page 19-24
Disc Inspection, page 19-27
Disc Replacement, page 19-29
Caliper Overhaul, page 19-31

FRONT BRAKE
Pad Inspection and Replacement, page 19-12
Disc Inspection, page 19-14
Disc Replacement, page 19-17
Caliper Overhaul, page 19-18

Brake System Inspection and Test

Inspect the brake system components listed. Repair or replace any parts that are leaking or damaged.

Component Inspections:

Component	Procedure	Also check for:
Master Cylinder	Look for damage or signs of fluid leakage at: • Reservoir or master cylinder body. • Line joints. • Between master cylinder and booster.	Bulging seal at reservoir cap. This is a sign of fluid contamination.
Brake Hoses	Look for damage or signs of fluid leakage at: • Line joints and line joint connections. • Hoses and lines, also inspect for twisting or damage.	Bulging, twisted, or bent lines.
Caliper	Look for damage or signs of fluid leakage at: • Piston seal. • Line joint connections. • Bleeder screw.	Seized or sticking caliper pins.
VSA Modulator-Control Unit	Look for damage or signs of fluid leakage at: • Line joints. • Modulator-control unit.	

Brake System Test

Brake pedal sinks/fades when braking

1. Set the parking brake, and start the engine, then turn off the A/C. Allow the engine to warm up to normal operating temperature (radiator fan comes on twice).
2. Attach a 50 mm (2 in) piece of masking tape along the bottom of the steering wheel, and draw a horizontal reference mark across it.
3. With the transmission in P or N, press and hold the brake pedal lightly (about the same pressure needed to keep an A/T-equipped car from creeping), then release the parking brake.
4. While still pressing the brake pedal, hook the end of the tape measure behind the brake pedal, then pull the tape up to the steering wheel, noting where the tape measure lines up with the reference mark you made on the masking tape.
5. Apply steady pressure to the brake pedal for 3 minutes.
6. Watch the tape measure.
   - If it moves less than 10 mm (3/8 in), the master cylinder is OK.
   - If it moves more than 10 mm (3/8 in), replace the master cylinder.

Symptom Troubleshooting

Rapid brake pad wear, vehicle vibration (after a long drive), or high, hard brake pedal

1. Drive the vehicle until the brakes drag or until the pedal is high and hard. This can take 20 or more brake pedal applications during an extended test-drive.

2. With the engine running, raise the vehicle on a lift (see page 1-8), and spin all four wheels by hand.

   Is there brake drag at any of the wheels?

   YES—Go to step 3.

   NO—Look for other causes of pad wear, high pedal, or vehicle vibration. ■

3. Turn the engine off, pump the brake pedal to deplete the vacuum in the brake booster, and then spin the wheels again to check for brake drag.

   Is there brake drag at any of the wheels?

   YES—Go to step 4.

   NO—Replace the brake booster (see page 19-23). ■

4. Without removing the brake lines, unbolt and separate the master cylinder from the booster, then spin the wheels to check for brake drag.

   Is there brake drag at any of the wheels?

   YES—Go to step 5.

   NO—Check the brake pedal position switch adjustment and pedal free play (see page 19-6). ■

5. Loosen the hydraulic lines at the master cylinder, then spin the wheels to check for brake drag.

   Is there brake drag at any of the wheels?

   YES—Go to step 6.

   NO—Check the master cylinder reservoir for contamination in the brake fluid. If you find contamination, flush the entire brake system of all contaminated fluid, then replace all rubber parts in the brake system that were exposed to contaminated fluid. If the brake fluid is OK, replace the master cylinder (see page 19-19). ■

6. Loosen the bleeder screws at each caliper, then spin the wheels to check for brake drag.

   Is there brake drag at any of the wheels?

   YES—Check the master cylinder reservoir for contamination in the brake fluid. If you find contamination, flush the entire brake system of all contaminated fluid, then replace all rubber parts in the brake system that were exposed to contaminated fluid. If the brake fluid is OK, disassemble and repair the caliper on the wheel(s) with brake drag. ■

   NO—Look for a bulging master cylinder cap seal, discolored or contaminated brake fluid in the master cylinder, or damaged brake lines. If any of these items are damaged, replace them. If all of these items are OK, replace the VSA modulator-control unit (see page 19-105). ■

Brake Pedal and Brake Pedal Position Switch Adjustment

Pedal Height

1. Turn the brake pedal position switch (A) counterclockwise, and pull it back until it is no longer touching the brake pedal.

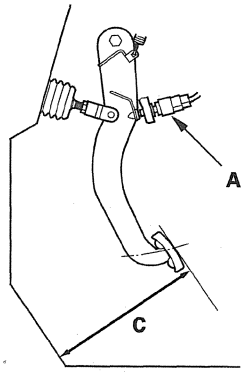

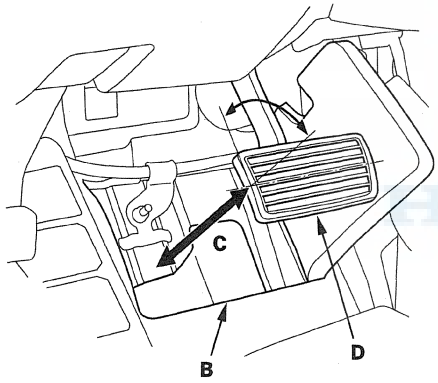

2. Pull back the carpet, and find the cutout (B) in the insulation. Measure the pedal height (C) from the left side middle of the pedal pad (D) to the floor without the insulation.

Standard pedal height (with carpet removed): 178 mm (7 in)

3. Loosen the pushrod locknut (A), and screw the pushrod in or out with pliers until the standard pedal height from the floor is reached. After adjustment, tighten the locknut firmly. Do not adjust the pedal height with the pushrod pressed.

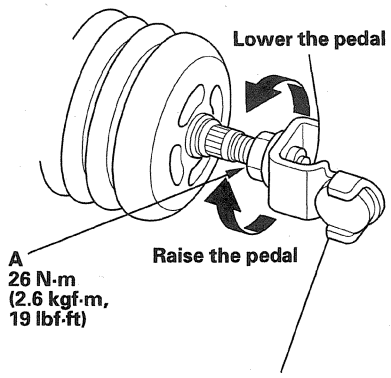

Brake Pedal Position Switch Adjustment

4. Lift up on the brake pedal by hand. Push in the brake pedal position switch until its plunger is fully pressed (threaded end (A) touching the pad (B) on the pedal arm). Then, turn the switch 45° clockwise to lock it. The gap between the brake pedal position switch and the pad is automatically adjusted to 0.7 mm (0.028 in) by locking the switch. Make sure the brake lights go off when the pedal is released.

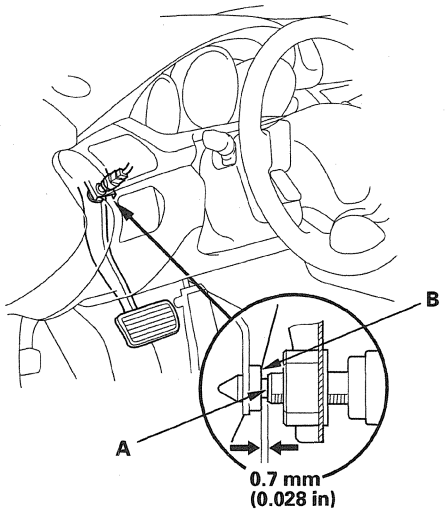

5. Check the brake pedal free play.

Pedal Free Play

1. With the ignition switch in LOCK (0), inspect the play (A) at the brake pedal pad (B) by pushing the brake pedal by hand. If the brake pedal free play is out of specification, adjust the brake pedal position switch (C). If the brake pedal free play is insufficient, it may result in brake drag.

   Free play: 0.5—2.0 mm (0.02—0.08 in)

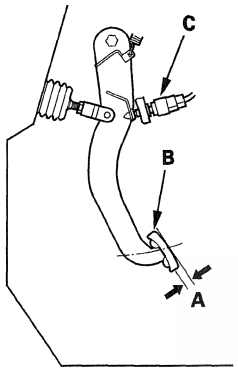

Parking Brake Inspection and Adjustment

Inspection

1. Press the parking brake pedal (A) with 294 N (30 kgf, 66 lbf) of force to fully apply the parking brake. The parking brake pedal should be locked within the specified number of clicks (B).

   Pedal locked clicks: 5 to 6

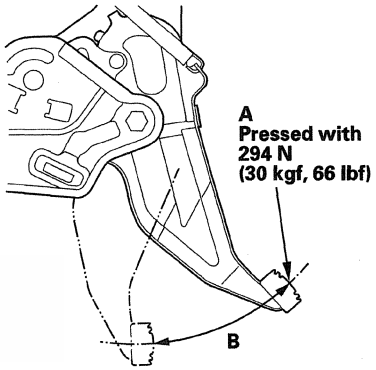

2. Adjust the parking brake if the pedal clicks are not within the specification.

   NOTE: Minor parking brake pedal adjustments (1 to 2 clicks) can be made with the adjusting nut. If a larger adjustment is required, follow the major adjustment procedure using the adjuster at the parking brake drum.
   After installing new parking brake shoes and/or new brake disc/drum, make sure you drive the vehicle for "break-in" (see page 19-37).

(cont'd)

Parking Brake Inspection and Adjustment (cont'd)

Minor Adjustment

1. Raise the vehicle on a lift (see page 1-8).
2. Release the parking brake pedal fully.
3. Press the parking brake pedal (A) 1 click.

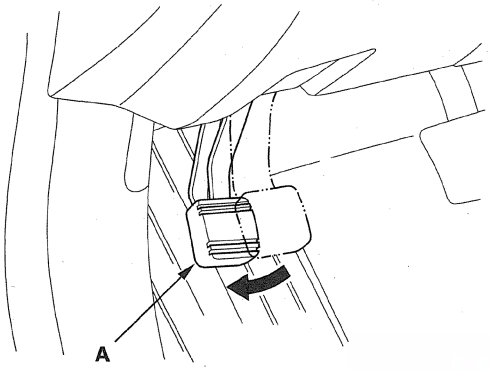

4. Tighten the parking brake adjusting nut (A) until the parking brakes drag slightly when the rear wheels are rotated.

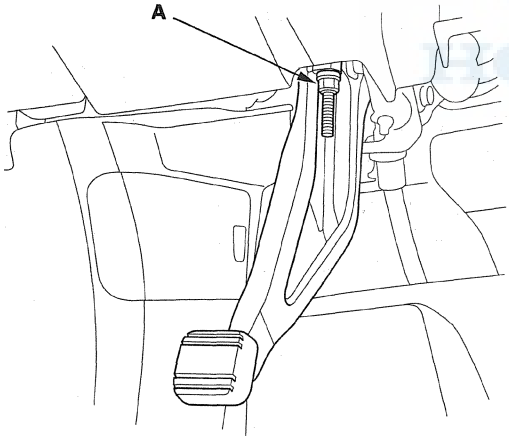

5. Release the parking brake pedal fully, and check that the parking brakes do not drag when the rear wheels are rotated. Readjust if necessary.
6. Make sure the parking brakes pedal is within the specified number of clicks (5 to 6 clicks).

Major Adjustment (to be done when replacing parking brake shoes and after lining surface break-in)

1. Raise the vehicle on a lift (see page 1-8).
2. Release the parking brake pedal fully.
3. Loosen the parking brake adjusting nut (A).

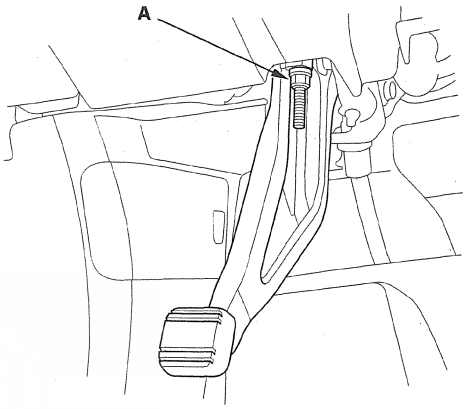

4. Remove the rear wheels.
5. Remove the access plug (A).

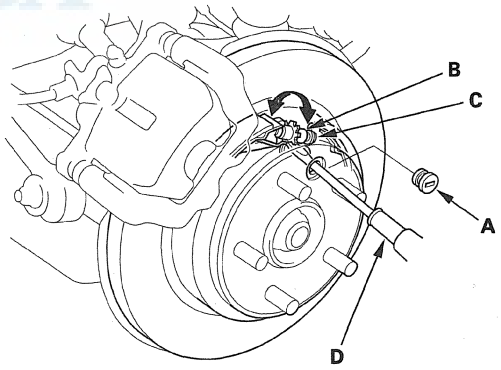

6. Turn the ratchet teeth (B) on the adjuster assembly (C) with a flat-tip screwdriver (D) until the shoes lock against the parking brake drum. Then back off the adjuster 12 clicks, and install the access plug.
7. Do the minor adjustment procedure.
8. Clean the mating surface of the brake disc/drum and the inside of the wheel, then install the rear wheels.

Brake System Bleeding

NOTE:
- Do not reuse the drained fluid. Use only new Acura DOT 3 Brake Fluid from an unopened container. Using a non-Acura brake fluid can cause corrosion and shorten the life of the system.
- Make sure no dirt or other foreign matter is allowed to contaminate the brake fluid.
- Do not spill brake fluid on the vehicle, it may damage the paint. If brake fluid does contact the paint, wash it off immediately with water.
- The reservoir connected to the master cylinder must be at the MAX (upper) level mark at the start of the bleeding procedure, and checked after bleeding each wheel location. Add fluid as required.

1. Make sure the brake fluid level in the reservoir (A) is at the MAX (upper) level line (B).

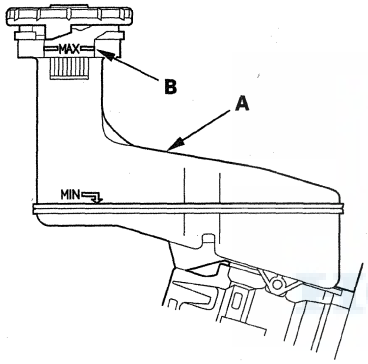

2. Have someone slowly pump the brake pedal several times, then apply steady pressure.

3. Start the bleeding at the driver's side of the front brake system.

   NOTE: Bleed the calipers in the sequence shown.

BLEEDING SEQUENCE:

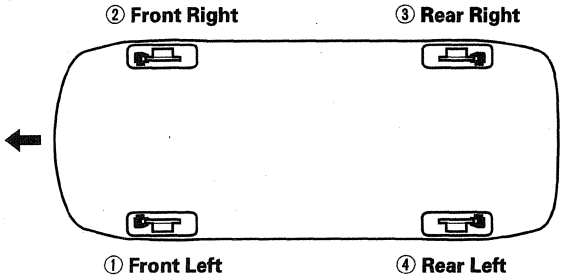

4. Attach a length of clear drain tube (A) to the bleed screw (B), then loosen the bleed screw to allow air to escape from the system. Then tighten the bleed screw securely.

Front

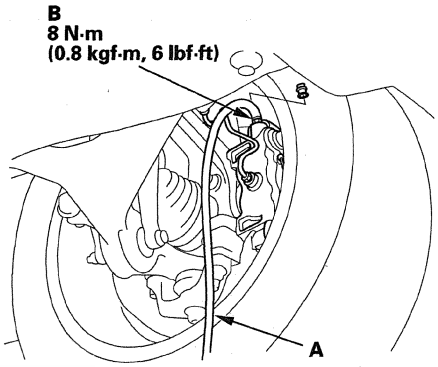

Rear

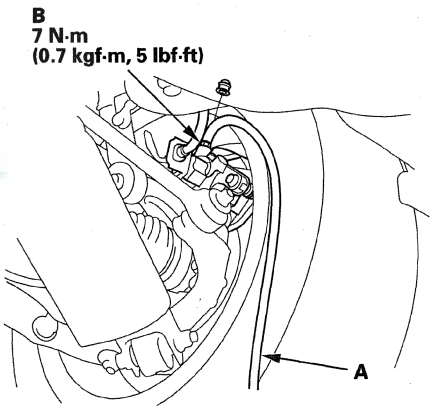

5. Refill the master cylinder reservoir to the MAX (upper) level line.

6. Repeat the procedure for each brake circuit until there are no air bubbles in the fluid.

Brake System Indicator Circuit Diagram

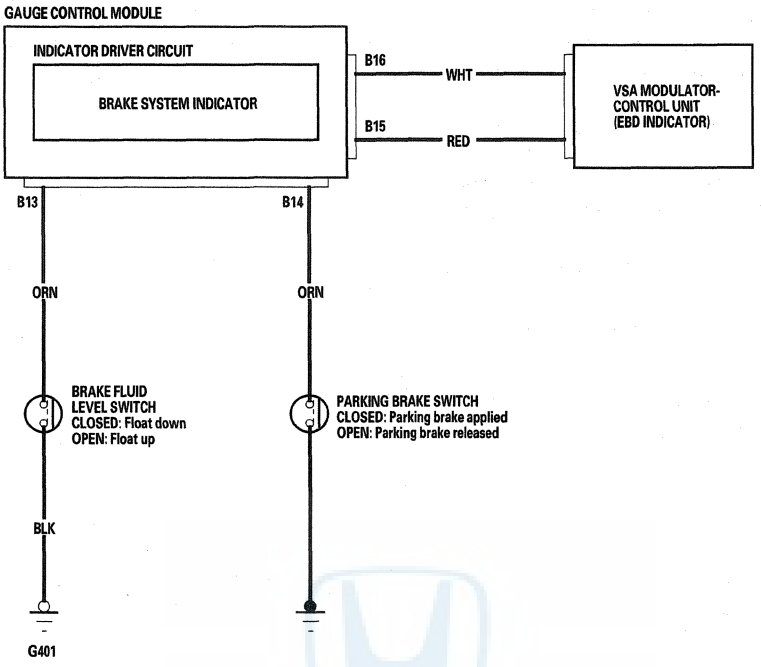

Parking Brake Switch Test

NOTE: If both the ABS/VSA indicator and the brake system indicator come on at the same time, check the VSA system first (see page 19-46).

1. Disconnect the parking brake switch connector (A) from the parking brake switch (B).

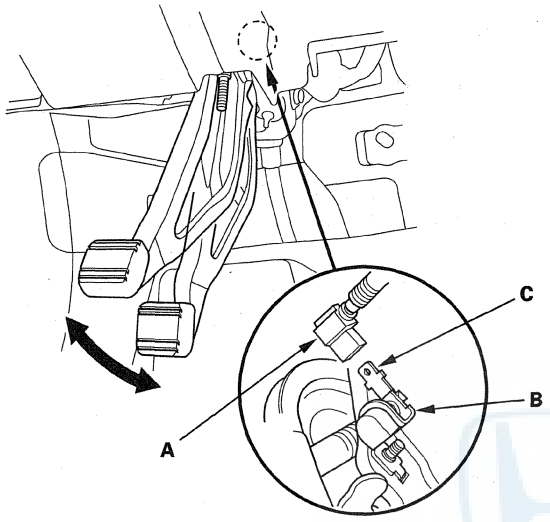

2. Check for continuity between the positive terminal (C) and body ground.

   - With the parking brake pedal pushed, there should be continuity.
   - With the parking brake pedal released, there should be no continuity.

   NOTE:
   - If both the ABS/VSA indicator and the brake system indicator come on at the same time, check the VSA first.
   - If the parking brake switch/fluid level switch is OK, but the brake system indicator does not function, check the VSA (Do the input test for the daytime running lights control unit first).

3. Reconnect the parking brake switch connector.

Brake Fluid Level Switch Test

1. Disconnect the brake fluid level switch connector.

2. Check for continuity between the terminals (1) and (2) with the float in the down position and in the up position.

   NOTE:
   - If both the ABS indicator and the brake system indicator come on at the same time, check the VSA system first (see page 19-46).
   - Remove the brake fluid completely from the reservoir. With the float down, there should be continuity.
   - Fill the reservoir with brake fluid to the MAX (upper) level (A). With the float up, there should be no continuity.
   - If the parking brake switch and brake fluid level switch are OK, but the brake system indicator does not function, do the gauge control module self-diagnostic function (see page 22-396).

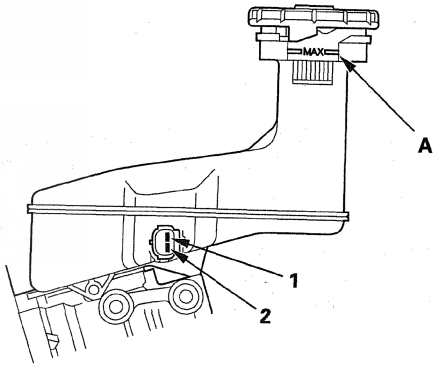

3. Reconnect the brake fluid level switch connector.

HONDA

Front Brake Pad Inspection and Replacement

Special Tools Required
Brake caliper piston compressor 07AAE-SEPA101

⚠CAUTION

Frequent inhalation of brake pad dust, regardless of material composition, could be hazardous to your health.
- Avoid breathing dust particles.
- Never use an air hose or brush to clean brake assemblies. Use an OSHA-approved vacuum cleaner.

Inspection

NOTE: Due to the high performance nature of the brake system, the rotors and pads may wear faster. Be sure to inspect the front rotor thickness anytime the front pads are replaced.

1. Raise the vehicle on a lift (see page 1-8).
2. Remove the front wheels.
3. Check the thickness (A) of the inner brake pad (B) and outer pad (C). Do not include the thickness of the brake pad backing plate.

   Brake pad thickness:
   Standard: 10.5—11.5 mm (0.41—0.45 in)
   Service limit: 1.6 mm (0.06 in)

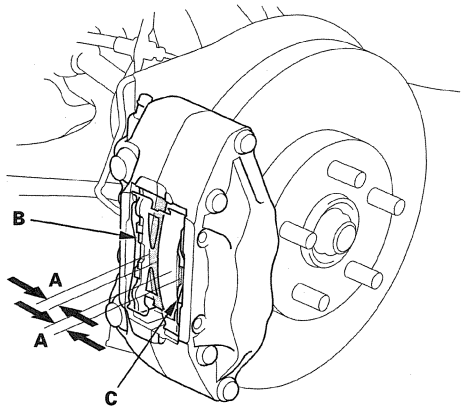

4. If any part of the brake pad thickness is less than the service limit, replace all of the front brake pads as a set.
5. Clean the mating surface between the brake disc and the inside of the wheel, then install the front wheels.

Replacement

NOTE: Due to the high performance nature of the brake system, the rotors and pads may wear faster. Be sure to inspect the front rotor thickness anytime the front pads are replaced.

1. Remove some brake fluid from the master cylinder.
2. Raise the vehicle on a lift (see page 1-8).
3. Remove the front wheels.
4. Turn and twist out the clip (A) from the caliper hole (B), and pull the clip out from the pad pins (C).

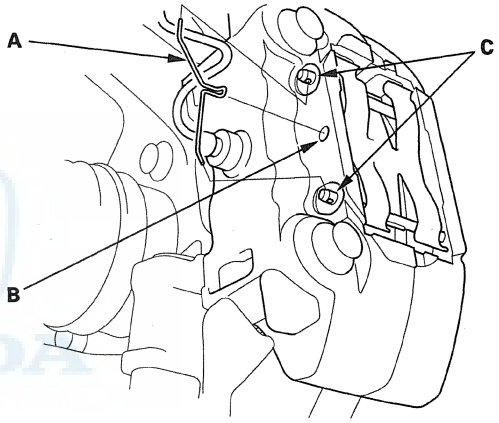

5. Remove the pad pins (A) and the pad spring (B).

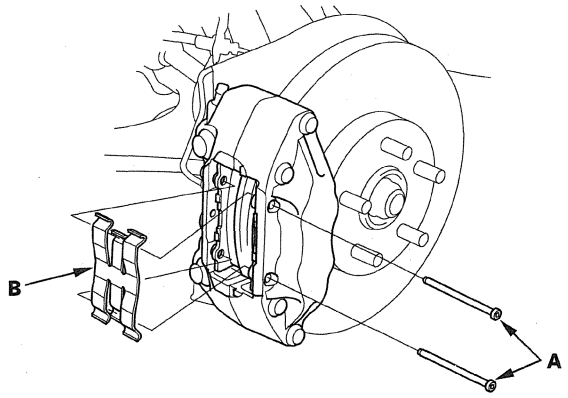

6. Remove the pads (A).

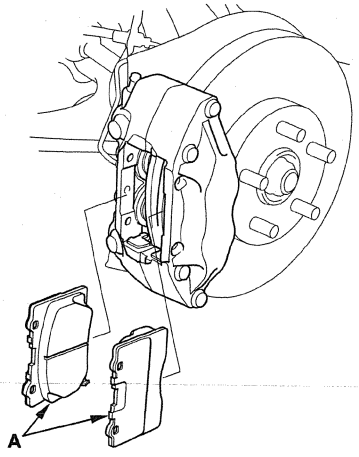

7. Clean the caliper thoroughly; remove any rust, and check for grooves and cracks.

8. Inspect the brake disc for runout, thickness, parallelism (see page 19-14), and check for damage and cracks.

9. Mount the brake caliper piston compressor tool (A) on the caliper.

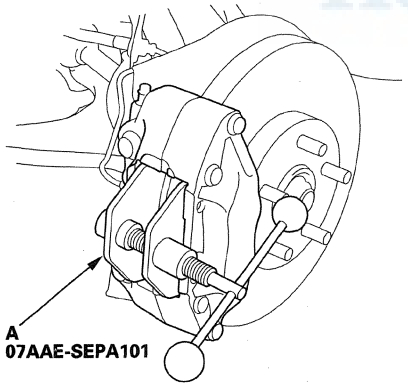

10. Press in the piston with the brake caliper piston compressor tool so that the caliper will fit over the pads. Make sure the piston boot is in position to prevent damaging it.

    NOTE: Be careful when pressing in the piston; brake fluid might overflow from the master cylinder's reservoir. If brake fluid gets on any painted surface, wash it off immediately with water.

11. Remove the brake caliper piston compressor tool.

12. Apply a thin coat of M-77 assembly paste (P/N 08798-9010) to the pad sides of the pad shim (A), the back of the brake pads (B), and the other areas indicated by the arrows. Wipe excess assembly paste off the pads. Contaminated brake discs or pads reduce stopping ability. Keep paste off the brake discs and pads.

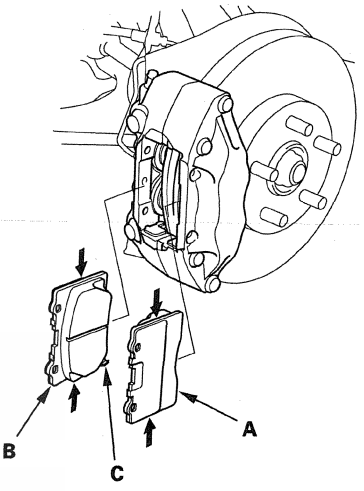

13. Install the brake pads correctly. Install the brake pad with the wear indicator (C) on the inside. If you are reusing the brake pads, always reinstall the brake pads in their original positions to prevent a temporary loss of braking efficiency.

14. Install the pad spring (A). Hold the pad spring and install the pad pins (B) into the caliper from the outside to the inside of vehicle.

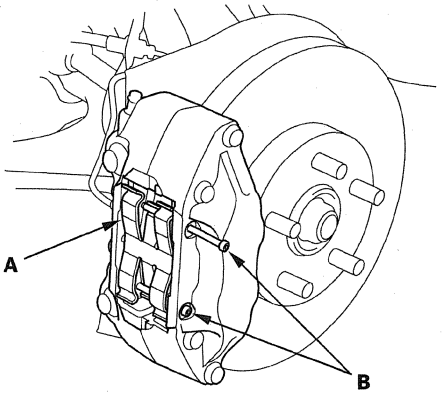

(cont'd)

Front Brake Pad Inspection and Replacement (cont'd)

15. First insert the clip ends (A) to the pad pins (B), and then twist the clip into the caliper hole (C) to stabilize.

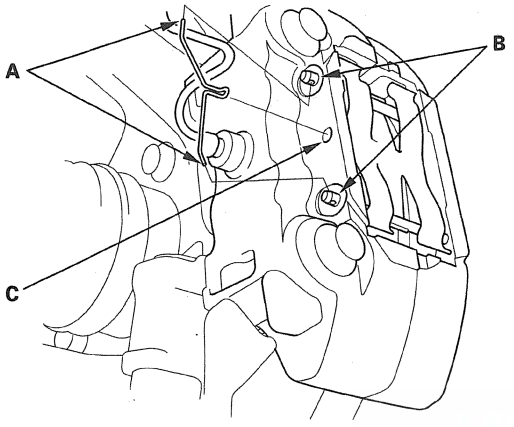

16. Clean the mating surface between the brake disc and the inside of the wheel, then install the front wheels.

17. Press the brake pedal several times to make sure the brakes work.

    NOTE: Engagement may require a greater pedal stroke immediately after the brake pads have been replaced as a set. Several applications of the brake pedal will restore the normal pedal stroke.

18. Add brake fluid as needed.

19. After installation, check for leaks at the brake hose and line joints or connections, and retighten if necessary.

20. Reinstall the front wheels, then test-drive the vehicle.

21. Check for leaks.

Front Brake Disc Inspection

Runout

1. Raise the vehicle on a lift (see page 1-8).

2. Remove the front wheels.

3. Remove the brake pads (see page 19-12).

4. Inspect the brake disc to wheel surface for damage and cracks. Clean the brake disc thoroughly, and remove all rust.

5. Install suitable flat washers (A) and the wheel nuts (B), and tighten the wheel nuts to the specified torque to hold the brake disc securely against the hub.

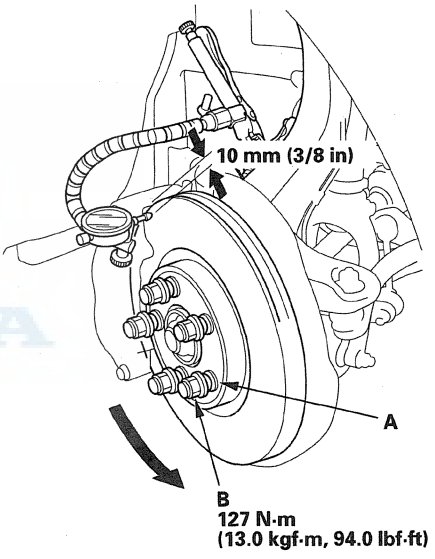

6. Set up the dial gauge against the brake disc as shown, and measure the runout at 10 mm (3/8 in) from the outer edge of the brake disc.

Brake disc runout:
Service limit: 0.04 mm (0.0016 in)

7. If the brake disc is beyond the service limit, refinish the brake disc with a Honda-approved commercially available on-car brake lathe.

   Max. refinishing limit: 26.0 mm (1.02 in)

   NOTE:
   - If the brake disc is beyond the service limit for refinishing, replace it (see page 19-17).
   - If the brake disc is replaced with a new one, check the new disc for runout. If the new disc is out of specification, refinish the disc.

8. Install the brake pads (see page 19-12).

9. Clean the mating surfaces between the brake disc and the inside of the wheel, then install the front wheels.

Thickness and Parallelism

1. Raise the vehicle on a lift (see page 1-8).

2. Remove the front wheels.

3. Remove the brake pads (see page 19-12).

4. Using a micrometer, measure the brake disc thickness at eight points, about 45° apart and 10 mm (3/8 in) in from the outer edge of the brake disc. Replace the brake disc if the smallest measurement is less than the max. refinishing limit.

Brake disc thickness:	
Standard:	**27.9—28.1 mm (1.10—1.11 in)**
Max. refinishing limit:	**26.0 mm (1.02 in)**
Brake disc parallelism:	**0.015 mm (0.0006 in) max.**

NOTE: This is the maximum allowable difference between the thickness measurements.

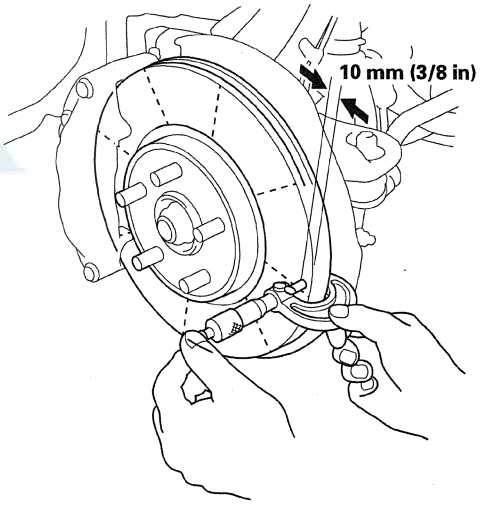

(cont'd)

Front Brake Disc Inspection (cont'd)

5. If the brake disc is beyond the service limit for parallelism, refinish the brake disc with a Honda-approved commercially available on-car brake lathe.

   NOTE: If the brake disc is beyond the service limit for refinishing, replace it (see page 19-17).

6. Install the brake pads (see page 19-12).

7. Clean the mating surfaces between the brake disc and the inside of the wheel, then install the front wheels.

Refinishing

NOTE: Refinish the brake disc with a commercially available on-car brake lathe.

1. Remove the brake caliper assembly (see page 19-17).

2. Install the brake lathe brackets (A) to the knuckle (B).

   NOTE: Place two bolts (C) in the brackets before tightening the bolts (D).

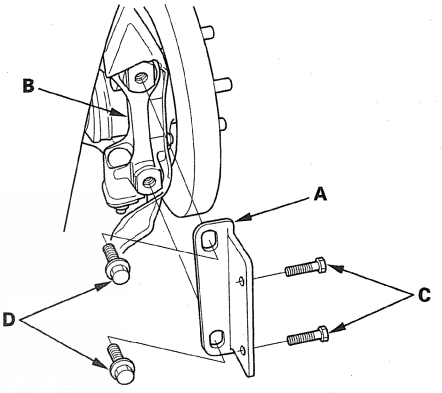

3. Install the on-car brake lathe adapters (A) to the brake lathe bracket (B), then refinish the brake disc.

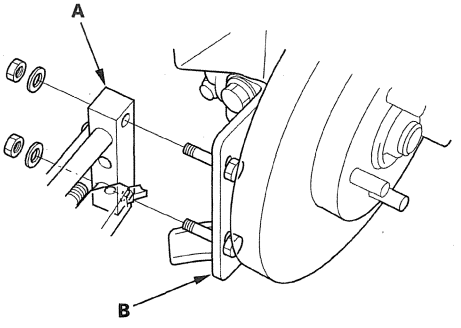

4. Measure the brake disc runout, thickness, and parallelism.

   NOTE:
   - If the brake disc is beyond the service limit for refinishing, replace it (see page 19-17).
   - A new brake disc should be refinished if its runout is greater than 0.04 mm (0.0016 in).

   Max. refinishing limit: 26.0 mm (1.02 in)

Front Brake Disc Replacement

NOTE: Keep any grease off the brake disc and brake pads.

1. Raise the vehicle on a lift (see page 1-8).
2. Remove the front wheels.
3. Remove the brake hose mounting bracket (A).

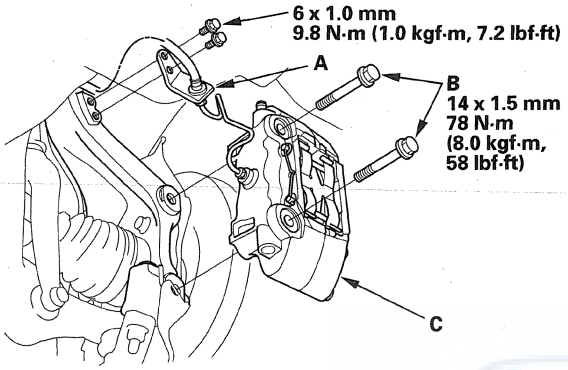

4. Remove the brake caliper bracket mounting bolts (B), and remove the caliper assembly (C) from the knuckle. To prevent damage to the caliper assembly or the brake hose, use a short piece of wire to hang the caliper assembly from the undercarriage. Do not twist the brake hose with force.
5. Remove the brake disc flathead screws (A).

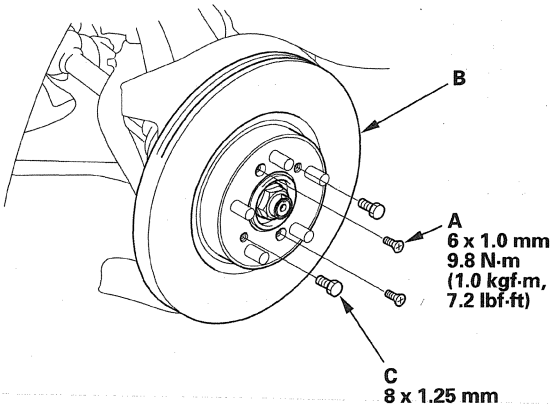

6. Remove the brake disc (B) from the front hub.

   NOTE: If the brake disc is stuck to the front hub, thread two 8 x 1.25 mm bolts (C) into the disc to push it away from the hub. Turn each bolt 90 degrees to prevent the brake disc from binding.

7. Install the brake disc in the reverse order of removal.

   NOTE: Before installing the brake disc, clean the mating surface of the front hub and the inside of the brake disc.

8. Inspect the brake disc for runout, thickness, and parallelism (see page 19-14).
9. Clean the mating surface of the brake disc and the inside of the wheel, then install the front wheel.

Conventional Brake Components

Front Brake Caliper Overhaul

⚠CAUTION

Frequent inhalation of brake pad dust, regardless of material composition, could be hazardous to your health.
- Avoid breathing dust particles.
- Never use an air hose or brush to clean brake assemblies. Use an OSHA-approved vacuum cleaner.

Remove, disassemble, inspect, reassemble, and install the caliper, and note these items:

- Do not spill brake fluid on the vehicle; it may damage the paint. If brake fluid gets on the paint, wash it off immediately with water.
- To prevent dripping brake fluid, cover disconnected hose joints with rags or shop towels.
- Clean all parts in brake fluid and air dry; blow out all passages with compressed air.
- Before reassembling, check that all parts are free of dirt and other foreign particles.
- Replace parts with new ones as specified in the illustration.
- Make sure no dirt or other foreign matter gets in the brake fluid.
- Make sure no grease or oil gets on the brake discs or pads.
- When reusing pads, always reinstall them in their original positions to prevent loss of braking efficiency.
- Do not reuse drained brake fluid. Use new clean Acura DOT 3 Brake Fluid from an unopened container. Using a non-Acura brake fluid can cause corrosion and shorten the life of the system.
- Coat the piston, piston seal groove, and caliper bore with clean brake fluid.
- Replace all rubber parts with new ones whenever disassembled.
- After installing the caliper, check the brake hose and line for leaks, interference, and twisting.

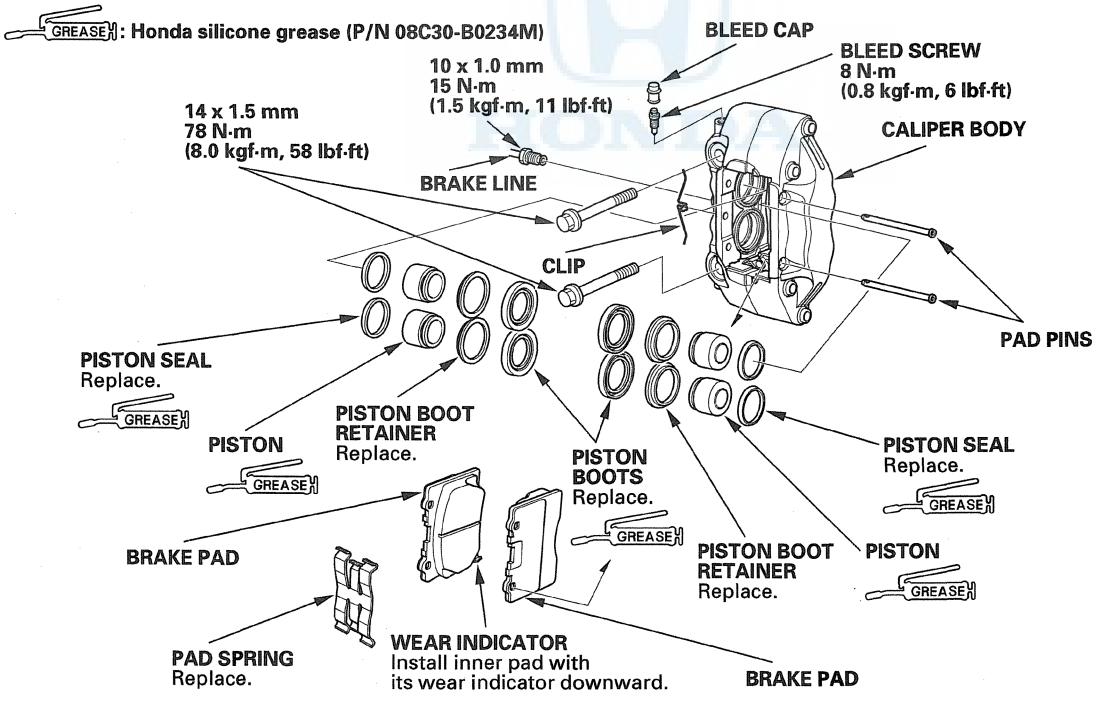

Master Cylinder Replacement

NOTICE

- Do not spill brake fluid on the vehicle; it may damage the paint. If brake fluid gets on the paint, wash it off immediately with water.
- Be careful not to damage or bend the brake lines during removal and inspection.
- To prevent the brake fluid from flowing, plug and cover the hose ends and joints with a shop towel or equivalent.

NOTE: When you apply the silicone grease, make sure not to get any on the terminal part of the connectors and surrounding switches. Also, do not touch the switches and the terminal part of the connector with hands or gloves that have silicone grease on them.

1. Remove the left and right upper fender trim (A) and left upper trim (B) (see page 20-162).

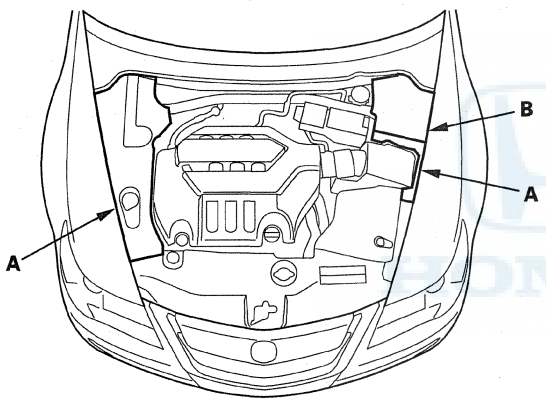

2. Remove the under-hood fuse/relay box, and move it aside (see page 22-84).

3. Remove the strut brace (see page 20-189).

4. Remove the reservoir cap and brake fluid from the master cylinder reservoir with a syringe.

5. Disconnect the brake fluid level switch connector (A).

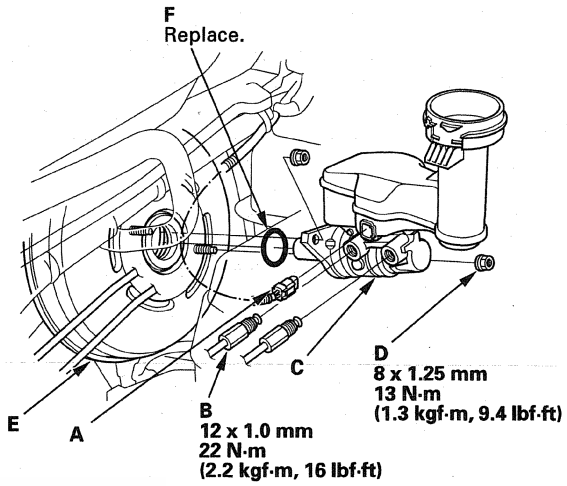

6. Disconnect the brake lines (B) from the master cylinder (C). To prevent spills, cover the line joints with rags or shop towels.

7. Remove the master cylinder mounting nuts (D) and the washers.

8. Remove the master cylinder from the brake booster (E). Be careful not to bend or damage the brake lines when removing the master cylinder.

9. Remove the O-ring (F) from the master cylinder.

10. Install the master cylinder in the reverse order of removal, and note these items:

    - Before installing the master cylinder, check the brake booster pushrod clearance (see page 19-22).
    - Replace the O-ring whenever the master cylinder is removed.
    - Coat the O-ring with shin-etsu silicone grease.
    - Bleed the brake system (see page 19-9).
    - Check the brake pedal height and free play after installing the master cylinder, and adjust it if necessary.

11. Bleed the brake system (see page 19-9).

12. Spin the wheels to check for brake drag.

Master Cylinder Inspection

1. Remove the master cylinder (see page 19-19).
2. Inspect and note these items:
   - Before reassembling, check that all parts are free of dirt and other foreign particles.
   - Do not try to disassemble the master cylinder assembly. Replace the master cylinder assembly with a new part, if necessary.
   - Do not allow dirt or foreign matter to contaminate the brake fluid.

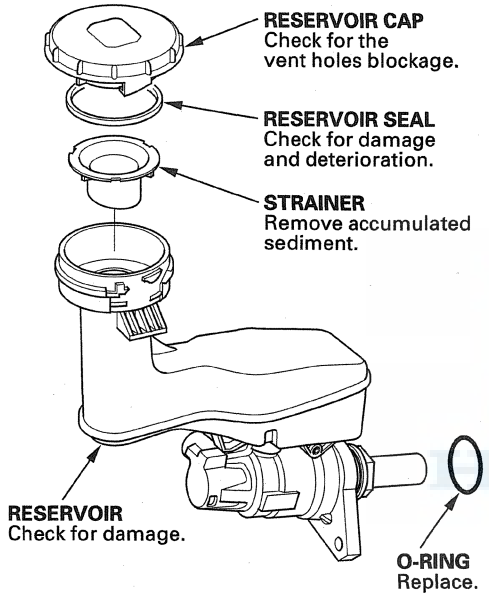

3. Install the master cylinder (see page 19-19).

Brake Booster Test

Functional Test

1. With the ignition switch in LOCK (0), press the brake pedal several times to deplete the vacuum reservoir, then press the brake pedal hard and hold it for 15 seconds. If the brake pedal sinks, either the master cylinder is bypassing internally or the brake system is leaking. Inspect the brake hoses and lines (see page 19-38).
2. Start the engine with the brake pedal pressed. If the pedal sinks slightly, the vacuum booster is operating normally. If the brake pedal height does not vary, do the brake system test (see page 19-4).
3. With the engine running, press the brake pedal lightly and shift the transmission to D. Apply just enough pressure to hold back automatic transmission creep. If the brake pedal sinks more than 10 mm (3/8 in) in 3 minutes, the master cylinder is faulty. A slight change in brake pedal height when the A/C compressor cycles on and off is normal (The A/C compressor load changes the vacuum available to the booster.).

Leak Test

1. Press the brake pedal with the engine running, then turn the ignition switch to LOCK (0). The brake pedal height should not vary while pressed for 30 seconds.

   - If the pedal height rises, go to step 6.
   - If it does not rise, go to step 2.

2. Start the engine and let it idle for 30 seconds. Turn the ignition switch to LOCK (0), and wait 30 seconds. Press the brake pedal several times using normal pressure. When the pedal is first pressed, it should be low. On consecutive applications, the pedal height should gradually rise.

   - If it rises, the booster is OK.
   - If it does not rise, go to step 3.

3. Disconnect the brake booster vacuum hose (A) at the booster. The check valve is built into the hose.

   NOTE: If the check valve is faulty, replace the brake booster vacuum hose/check valve as an assembly.

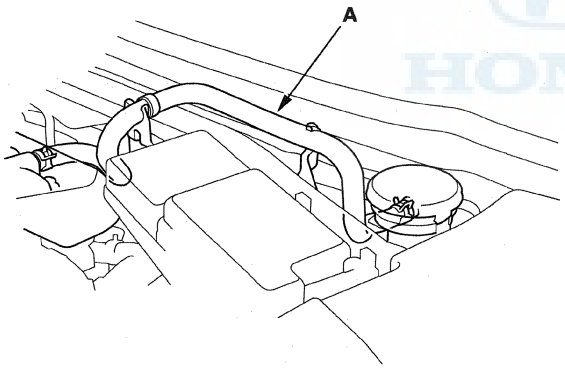

4. Start the engine, and let it idle. There should be vacuum available.

   - If no vacuum is available, the check valve is not working properly. Replace the brake booster vacuum hose and the check valve, and retest.
   - If vacuum is found, go to step 5.

5. With the ignition switch at LOCK (0), reconnect the vacuum hose to the brake booster.

6. Start the engine, and then pinch the brake booster vacuum hose between the check valve and the booster.

7. Turn the ignition switch to LOCK (0), and wait 30 seconds. Press the brake pedal several times using normal pressure. When the pedal is first pressed, it should be low. On consecutive applications, the pedal height should gradually rise.

   - If the pedal position does not vary, inspect the seal between the master cylinder and the booster. If the seal is OK, replace the brake booster.
   - If the pedal position varies, replace the brake booster vacuum hose/check valve as an assembly.

Brake Booster Pushrod Clearance Adjustment

Special Tools Required
Booster piston holder 070AB-SJA0100

NOTE:
- Brake booster pushrod-to-piston clearance must be checked and readjusted before installing the master cylinder.
- The master cylinder assembly comes with the specific plate that adjusts the clearance between the brake booster and the specific master cylinder piston.
- Every time you change the master cylinder; use only the enclosed plate to check the brake booster pushrod clearance.
- Do not use anything other than the enclosed plate to check the clearance. Make sure to discard the plate supplied with master cylinder after its use.
- The brake booster has to be on the vehicle before the adjustment.
- If the brake booster pushrod and clevis were removed as an assembly, measure the pushrod reference valve (A), and adjust the clevis as needed before installing the brake booster. In some situations, install the clevis after installing the brake booster, then adjust the brake pedal height.

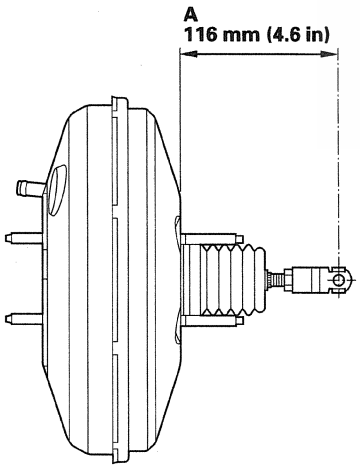

1. Measure the clearance between the plate (A), supplied with the master cylinder, and the brake booster pushrod (B). Make sure that the enclosed plate touches contacting surface (C) between the master cylinder and brake booster. If there is a gap between the tip of the plate and the pushrod (D) or a gap between the contacting surface and the plate (E), go to step 2.

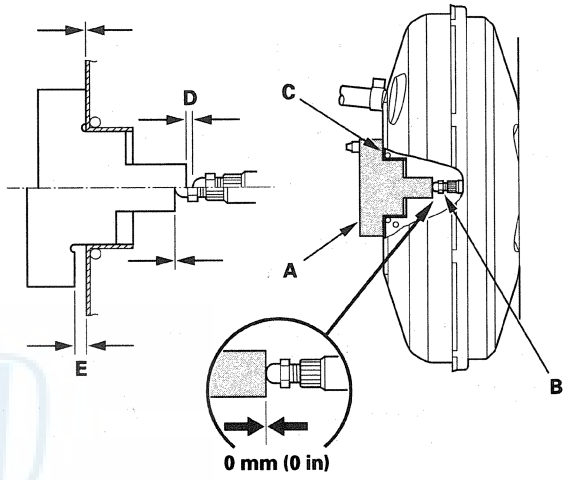

2. Use the special tool to hold the nut, and turn the 6 mm pushrod (A) clockwise or counterclockwise to adjust the pushrod inward or outward.

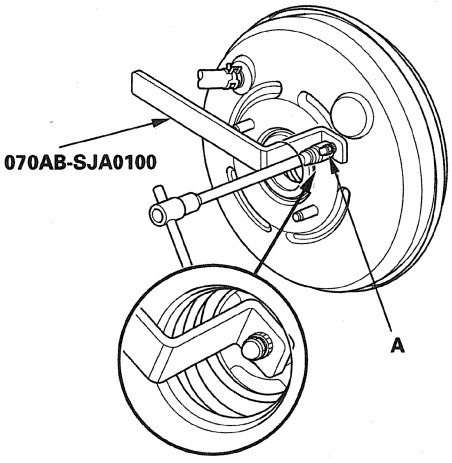

3. Install the master cylinder (see page 19-19).

Brake Booster Replacement

1. Remove the master cylinder (see page 19-19).

2. Disconnect the vacuum hose (A) from the brake booster (B).

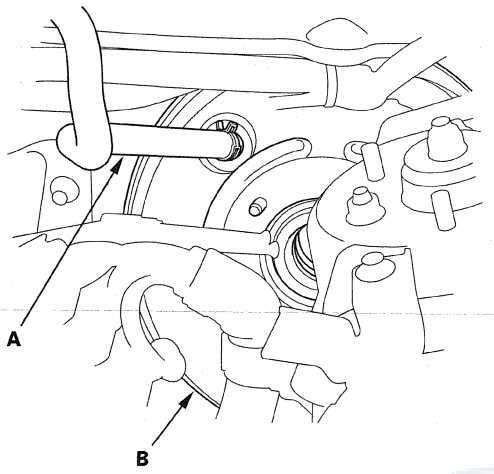

3. Remove the engine wire harness (A) from the harness brackets (B), and move the engine wire harness aside.

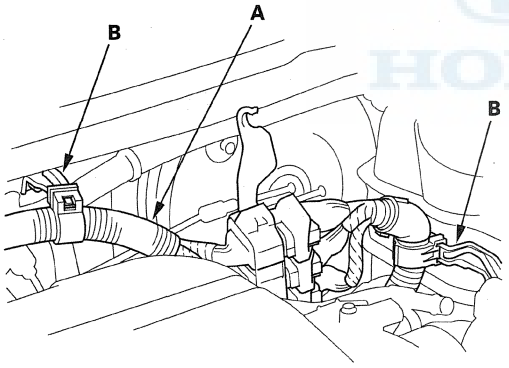

4. Loosen the clevis nut (A), then remove the lock pin (B) and the clevis pin (C).

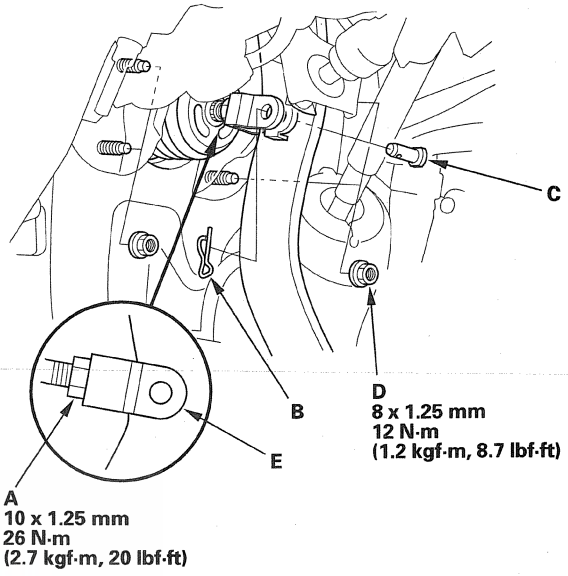

5. Remove the brake booster mounting nuts (D) and the clevis (E).

6. Twist the brake booster (A) forward while pulling out.

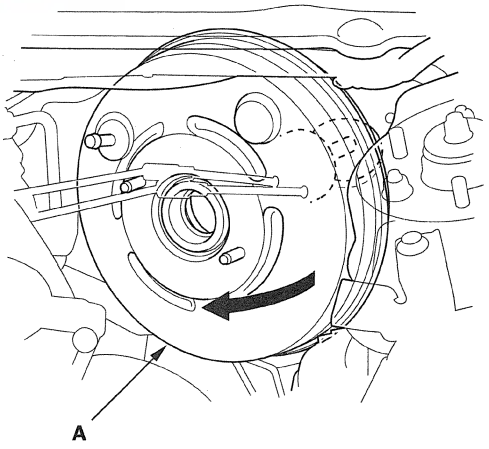

(cont'd)

Brake Booster Replacement (cont'd)

7. Remove the brake booster upward from the engine compartment.

NOTICE

- Be careful not to damage the booster surfaces and threads of the booster stud bolts.
- Be careful not to bend or damage the brake line.

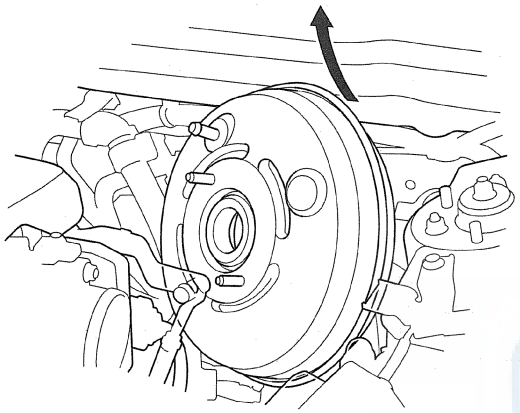

8. Install the brake booster in the reverse order of removal, and note these items:

- After installing the brake booster and master cylinder, fill the reservoir with new brake fluid from an unopened container, bleed the brake system (see page 19-9).
- Adjust the brake pedal height and free play (see page 19-6).
- Use a new booster gasket during installation.

Rear Brake Pad Inspection and Replacement

⚠CAUTION

Frequent inhalation of brake pad dust, regardless of material composition, could be hazardous to your health.

- Avoid breathing dust particles.
- Never use an air hose or brush to clean brake assemblies. Use an OSHA-approved vacuum cleaner.

Inspection

1. Raise the vehicle on a lift (see page 1-8).
2. Remove the rear wheels.
3. Check the thickness of the inner brake pad (A) and outer pad (B). Do not include the thickness of the backing plate.

Brake pad thickness:
Standard: 9.5—10.5 mm (0.37—0.41 in)
Service limit: 1.6 mm (0.06 in)

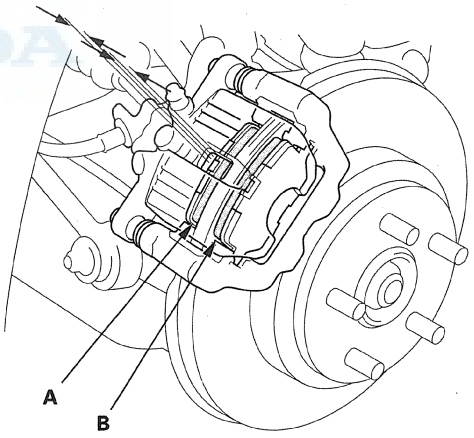

4. If any part of the brake pad thickness is less than the service limit, replace all the rear brake pads as a set.
5. Clean the mating surface between the brake disc/drum and the inside of the wheel, then install the rear wheels.

Replacement

1. Remove some brake fluid from the master cylinder.
2. Release the parking brake.
3. Raise the vehicle on a lift (see page 1-8).
4. Remove the rear wheels.
5. Remove the caliper bracket mounting bolts (A) while holding the caliper pins (B) with a wrench being careful not to damage the pin boot, and remove the caliper (C). Check the hose and pin boots for damage and deterioration. Thoroughly clean the outside of the caliper to prevent dust and dirt from entering inside. Support the caliper with a piece of wire so it does not hang from the brake hose.

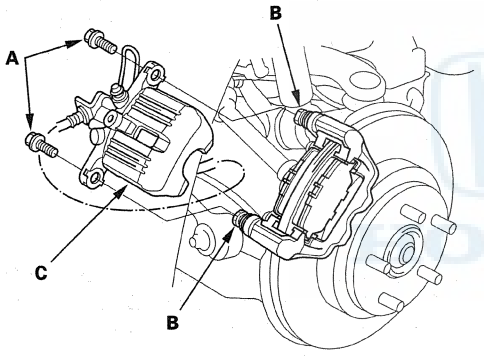

6. Remove the pad shims (A) and brake pads (B).

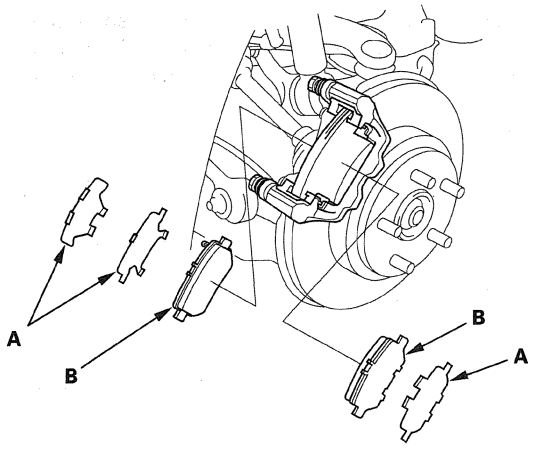

7. Remove the pad retainers (A).

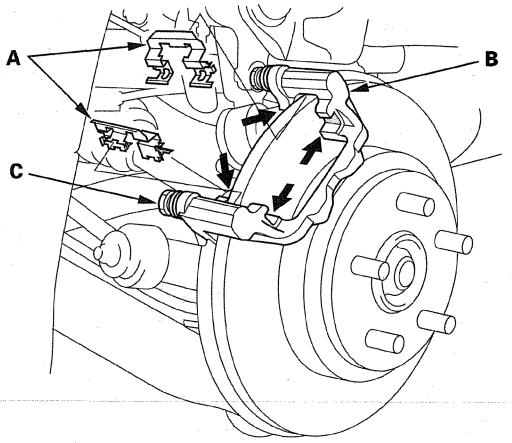

8. Clean the caliper bracket (B) thoroughly; remove any rust, and check for grooves and cracks. Verify that the caliper pins (C) move in and out smoothly. Clean and lube if needed.
9. Inspect the brake disc for runout, thickness, parallelism (see page 19-27), and check for damage and cracks.
10. Apply a thin coat of M-77 assembly paste (P/N 08798-9010) to the retainers mating surfaces of the caliper bracket indicated by the arrows.
11. Install the pad retainers. Wipe excess assembly paste off the retainers. Contaminated brake discs and pads reduce stopping ability. Keep assembly paste off the discs and pads.
12. Install the pad retainers.

(cont'd)

Rear Brake Pad Inspection and Replacement (cont'd)

13. Apply M-77 assembly paste (P/N 08798-9010) to the pad side of the shims (A), and the back of the brake pads (B) and the other areas indicated by the arrows. Wipe excess assembly paste off the pad shims and brake pads. Contaminated brake discs or pads reduce stopping ability. Keep assembly paste off the discs and pads.

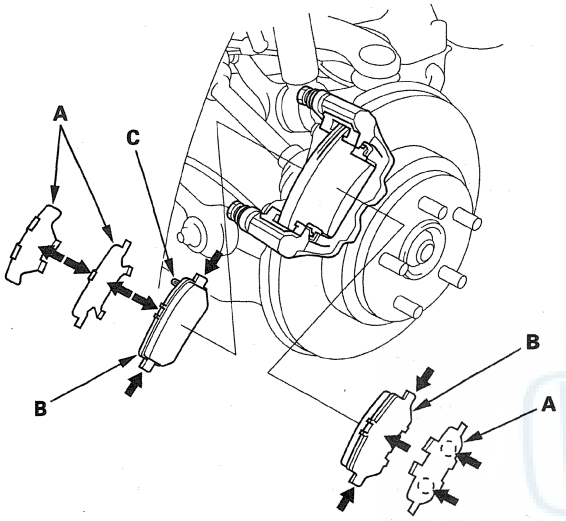

14. Install the brake pads and pad shims on the caliper bracket. Install the inner brake pad with its wear indicator (C) facing on top.
If you are reusing the brake pads, always reinstall the brake pads in their original positions to prevent a temporary loss of braking efficiency.

15. Push in the piston (A) so the caliper will fit over the brake pads. Make sure the piston boot is in position to prevent damaging it when installing the caliper.

NOTE: Be careful when pushing in the caliper, brake fluid might overflow from the master cylinder's reservoir.

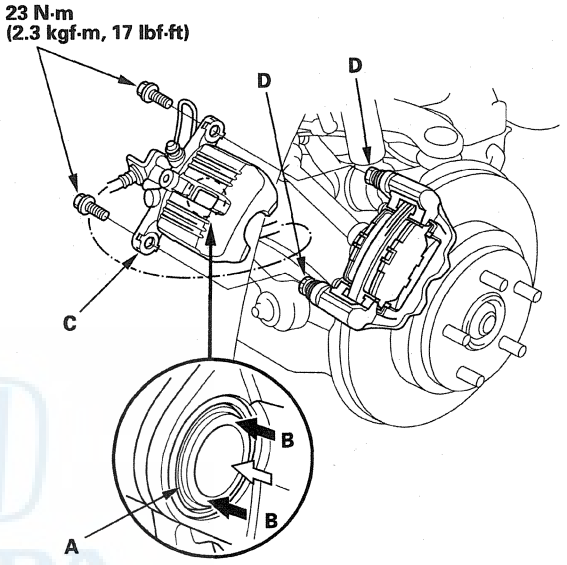

16. Apply a thin coat of M-77 assembly paste (P/N 08798-9010) to the piston edges (B) on their mating surfaces against the inner pad shim.

17. Install the brake caliper (C).

18. Install the caliper bolts, and torque them to the specified torque while holding the caliper pins (D) with a wrench being careful not to damage the pin boot.

19. Clean the mating surface between the brake disc/drum and the inside of the wheel, then install the rear wheels.

20. Press the brake pedal several times to make sure the brakes work, then road-test the vehicle.

    NOTE: Engagement may require a greater pedal stroke immediately after the brake pads have been replaced as a set. Several applications of the brake pedal will restore the normal pedal stroke.

21. Add brake fluid as needed.

22. After installation, check for leaks at the hose and line joints and connections, and retighten if necessary. Test-drive the vehicle, then recheck for leaks (see page 19-38).

Rear Brake Disc Inspection

Runout

1. Raise the vehicle on a lift (see page 1-8).

2. Remove the rear wheels.

3. Remove the brake pads (see page 19-25).

4. Inspect the brake disc/drum to wheel surface for damage and cracks. Clean the brake disc/drum thoroughly, and remove all rust.

5. Install suitable flat washers (A) and the wheel nuts (B), and tighten the wheel nuts to the specified torque to hold the brake disc/drum securely against the hub.

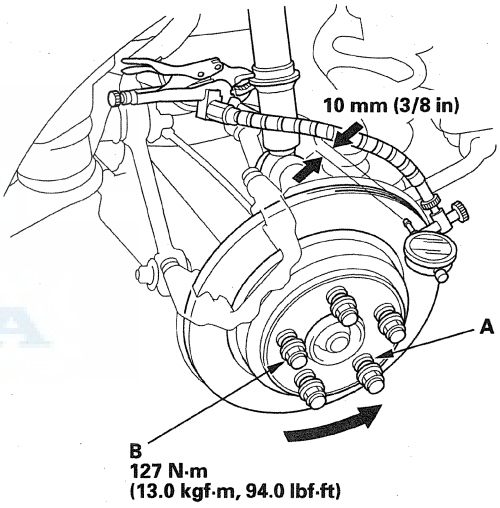

6. Set up the dial gauge against the brake disc/drum as shown, and measure the runout at 10 mm (3/8 in) from the outer edge of the brake disc/drum.

Brake disc/drum runout:
Service limit: 0.04 mm (0.0016 in)

(cont'd)

Rear Brake Disc Inspection (cont'd)

7. If the brake disc/drum is beyond the service limit, refinish the brake disc/drum with a Honda-approved commercially available on-car brake lathe.

   Max. refinishing limit: 14.0 mm (0.55 in)

   NOTE:
   - If the brake disc/drum is beyond the service limit for refinishing, replace it (see page 19-29).
   - If the brake disc/drum is replaced with a new one, check the new disc/drum for runout. If the new disc/drum is out of specification, refinish the disc/drum.

8. Install the brake pads (see page 19-25).

9. Clean the mating surfaces between the brake disc/drum and the inside of the wheel, then install the rear wheels.

Thickness and Parallelism

1. Raise the vehicle on a lift (see page 1-8).

2. Remove the rear wheels.

3. Remove the brake pads (see page 19-25).

4. Using a micrometer, measure the brake disc/drum thickness at eight points, about 45° apart and 10 mm (3/8 in) in from the outer edge of the brake disc/drum. Replace the brake disc/drum if the smallest measurement is less than the max. refinishing limit.

Brake disc/drum thickness:	
Standard:	**15.9—16.1 mm (0.625—0.634 in)**
Max. refinishing limit:	**14.0 mm (0.55 in)**
Brake disc/drum parallelism:	**0.015 mm (0.0006 in) max.**

NOTE: This is the maximum allowable difference between the thickness measurements.

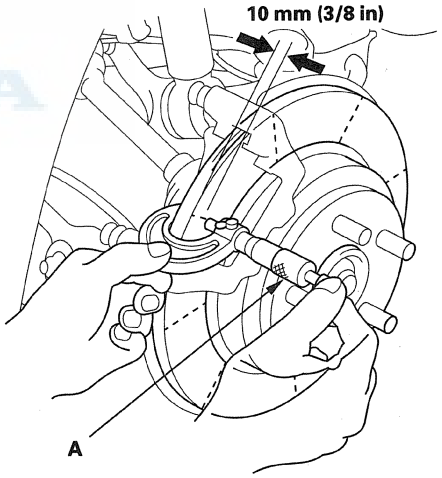

5. If the brake disc/drum is beyond the service limit for parallelism, refinish the brake disc/drum with a Honda-approved commercially available on-car brake lathe.

   NOTE: If the brake disc/drum is beyond the service limit for refinishing, replace it (see page 19-29).

6. Install the brake pads (see page 19-25).

7. Clean the mating surfaces between the brake disc/drum and the inside of the wheel, then install the rear wheels.

Rear Brake Disc Replacement

NOTE: Keep any grease off the brake disc/drum and brake pads.

1. Raise the vehicle on a lift (see page 1-8).

2. Remove the rear wheel.

3. Remove the brake caliper bracket mounting bolts (A), and remove the caliper assembly (B) from the knuckle. To prevent damage to the caliper assembly or the brake hose, use a short piece of wire to hang the caliper assembly from the undercarriage. Do not twist the brake hose with force.

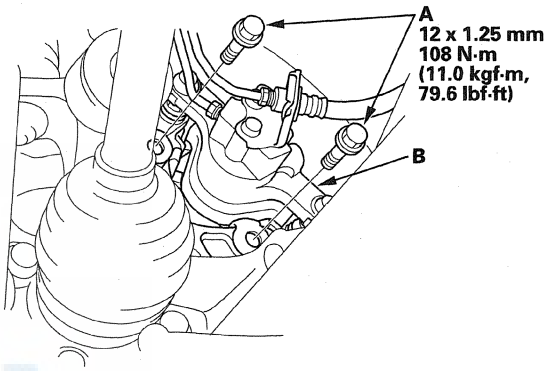

4. Remove the two washers (A).

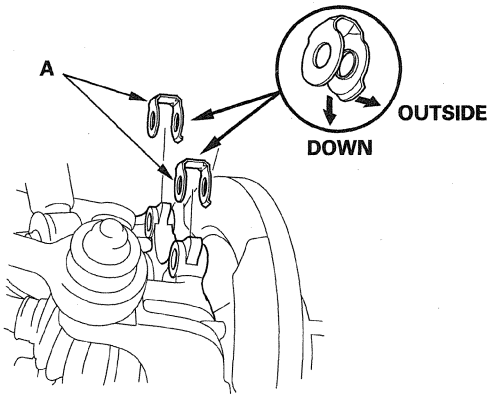

(cont'd)

Rear Brake Disc Replacement (cont'd)

5. Remove the brake disc flathead screws (A).

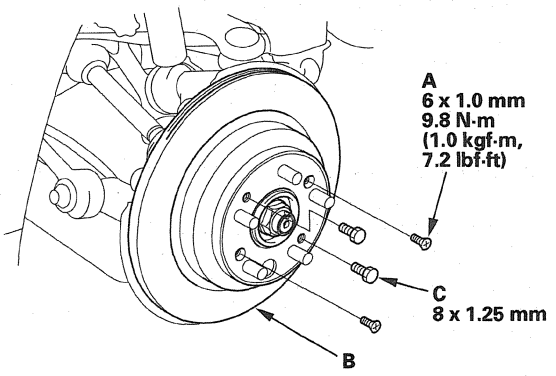

6. Remove the brake disc/drum (B) from the hub.

   NOTE: If the brake disc is stuck to the hub bearing unit, thread two 8 x 1.25 mm bolts (C) into the brake disc/drum to push it away from the hub bearing unit. Turn each bolt 90 degrees at a time to prevent the brake disc/drum from binding.

7. Install the brake disc/drum in the reverse order of removal, and note these items:

   - Before installing the brake disc/drum, clean the mating surfaces between the hub bearing unit and the inside of the brake disc/drum.
   - Adjust the parking brake (see page 19-8).

8. Inspect the brake disc for runout, thickness, and parallelism (see page 19-27).

9. Clean the mating surfaces between the brake disc/drum and the inside of the wheel, then install the rear wheel.

Rear Brake Caliper Overhaul

⚠CAUTION

Frequent inhalation of brake pad dust, regardless of material composition, could be hazardous to your health.
- Avoid breathing dust particles.
- Never use an air hose or brush to clean brake assemblies. Use an OSHA-approved vacuum cleaner.

Remove, disassemble, inspect, reassemble, and install the caliper, and note these items:

- Do not spill brake fluid on the vehicle; it may damage the paint. If brake fluid gets on the paint, wash it off immediately with water.
- To prevent dripping brake fluid, cover disconnected hose joints with rags or shop towels.
- Clean all parts in brake fluid and air dry; blow out all passages with compressed air.
- Before reassembling, check that all parts are free of dirt and other foreign particles.
- Replace parts with new ones as specified in the illustration.
- Make sure no dirt or other foreign matter gets in the brake fluid.
- Make sure no grease or oil gets on the brake discs or pads.
- When reusing brake pads, always reinstall them in their original positions to prevent loss of braking efficiency.
- Do not reuse drained brake fluid. Use only new Acura DOT 3 Brake Fluid from an unopened container. Non-Acura brake fluid can cause corrosion and shorten the life of the system.
- Coat the piston, piston seal groove, and caliper bore with clean brake fluid.
- Replace all rubber parts with new ones whenever disassembled.
- After installing the caliper, check the brake hose and line for leaks, interference, and twisting.
- When you apply the silicone grease, make sure not to get any on the terminal part of the connectors and the surrounding switches. Also, do not touch the switches and the terminal part of connector with hands or gloves that have silicone grease on them.

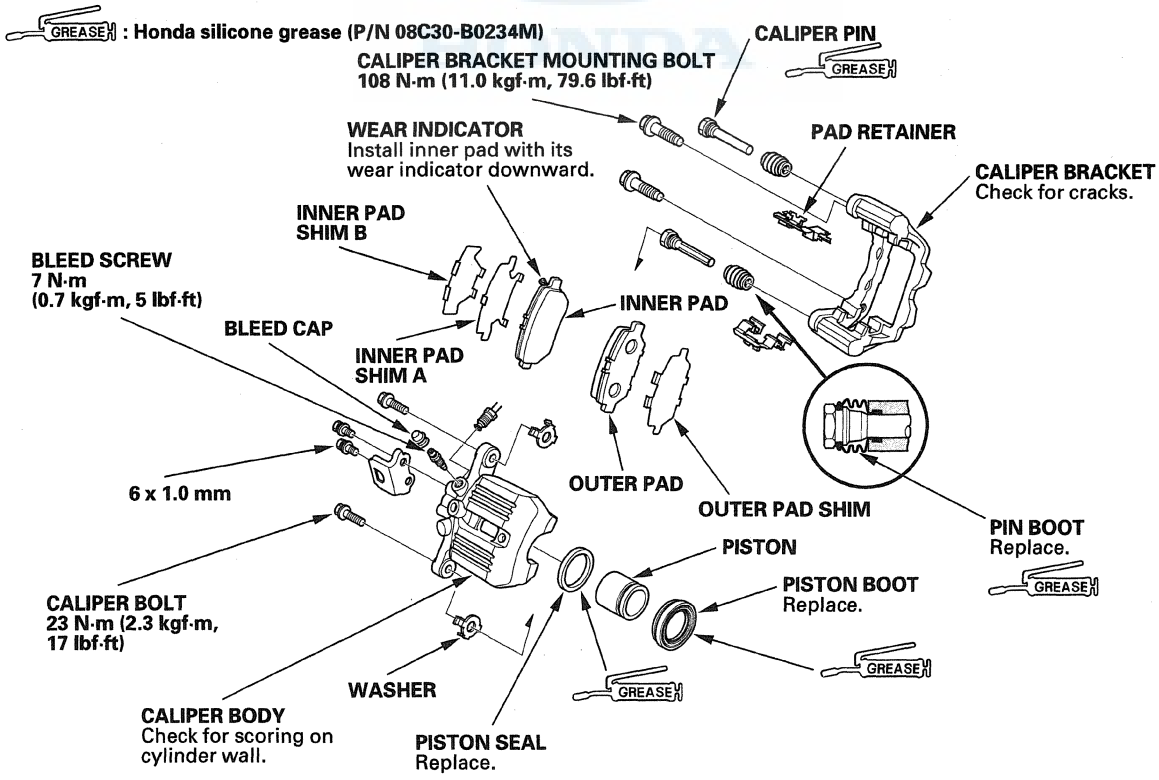

Parking Brake Inspection

⚠CAUTION

Frequent inhalation of brake pad dust, regardless of material composition, could be hazardous to your health.
- Avoid breathing dust particles.
- Never use an air hose or brush to clean brake assemblies. Use an OSHA-approved vacuum cleaner.

1. Release the parking brake.
2. Raise the vehicle on a lift (see page 1-8).
3. Remove the rear wheels.
4. Remove the rear brake caliper and the brake disc/drum (see page 19-29).

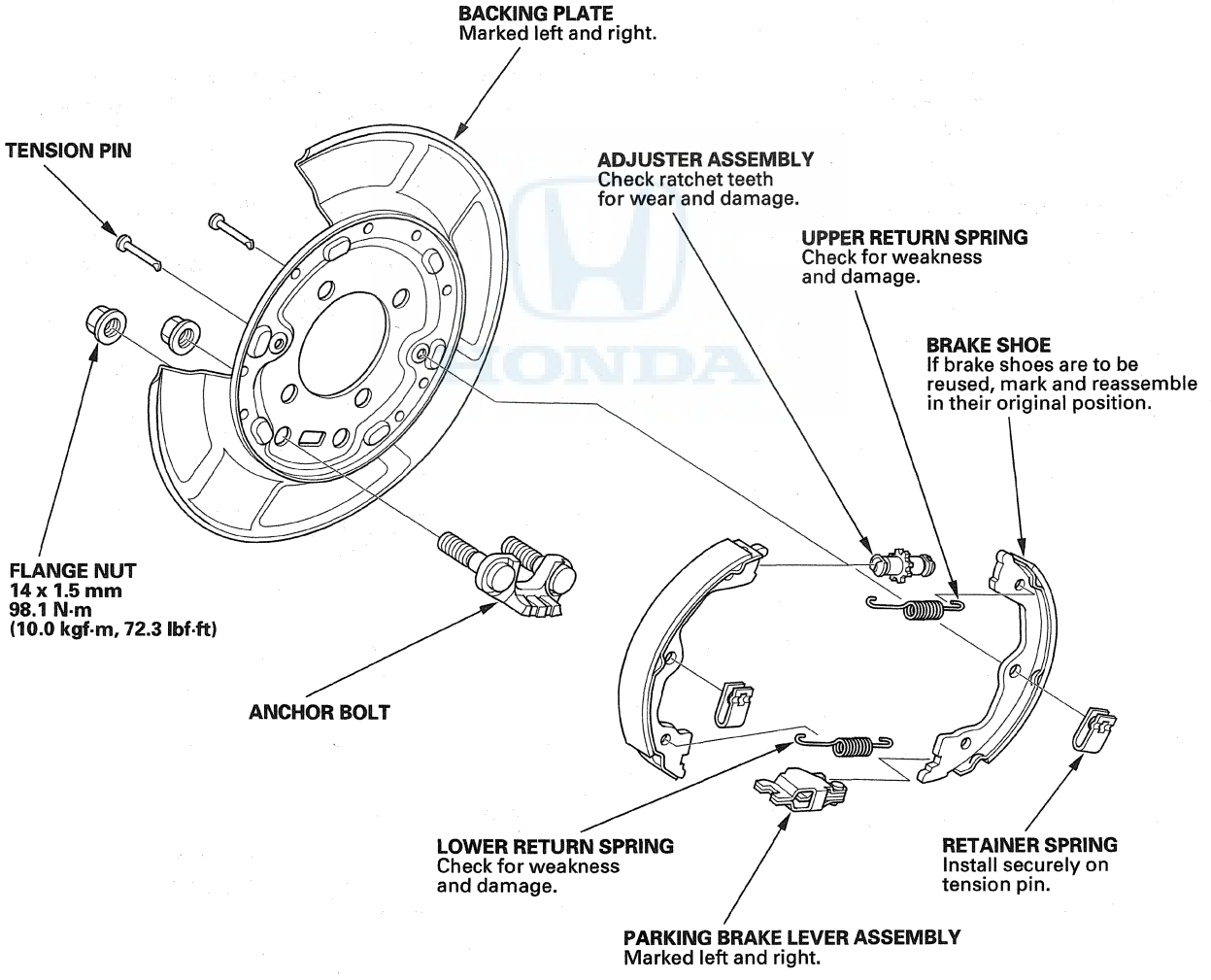

5. Check the parking brake linings (A) for cracking, glazing, wear, and contamination.

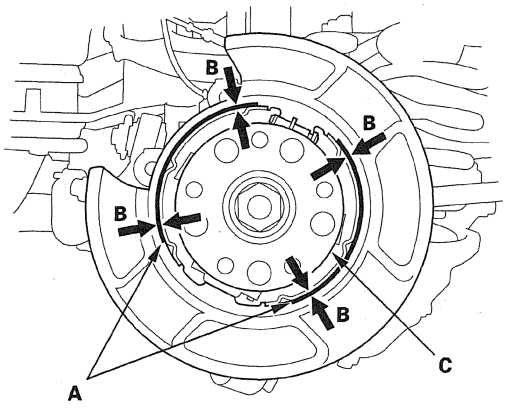

6. Measure the parking brake lining thickness (B). Measurement does not include brake shoe thickness.

Parking brake lining thickness:
Standard: 3.4 mm (0.133 in)
Service limit: 1.0 mm (0.04 in)

7. If the parking brake lining thickness is less than the service limit, replace all the parking brake shoes as a set.

8. Check the hub bearing unit (C) for smooth operation. If it requires servicing, replace the hub bearing unit (see page 18-27).

9. Measure the inside diameter of the parking brake drum with inside vernier calipers.

Parking brake drum inside diameter:
Standard: 189.9—190.1 mm (7.476—7.484 in)
Service limit: 191.0 mm (7.520 in)

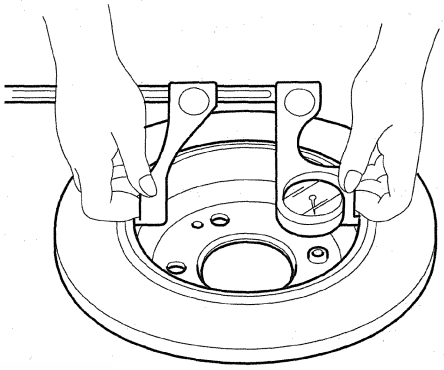

10. If the inside diameter of the parking brake drum is more than service limit, replace the brake disc/drum.

11. Check the parking brake disc/drum for scoring, grooves, and cracks.

12. Install the brake disc/drum and the rear brake caliper (see page 19-29).

13. Do the major parking brake adjustment (see page 19-8).

14. Clean the mating surface between the brake disc/drum and the inside of the wheel, then install the rear wheels.

Parking Brake Shoe Replacement

⚠CAUTION

Frequent inhalation of brake pad dust, regardless of material composition, could be hazardous to your health.
- Avoid breathing dust particles.
- Never use an air hose or brush to clean brake assemblies. Use an OSHA-approved vacuum cleaner.

Disassembly

1. Raise the vehicle on a lift (see page 1-8).
2. Remove the rear wheels.
3. Release the parking brake and remove the rear brake caliper and the brake disc/drum (see page 19-29).
4. Disconnect and remove the upper brake spring (A).

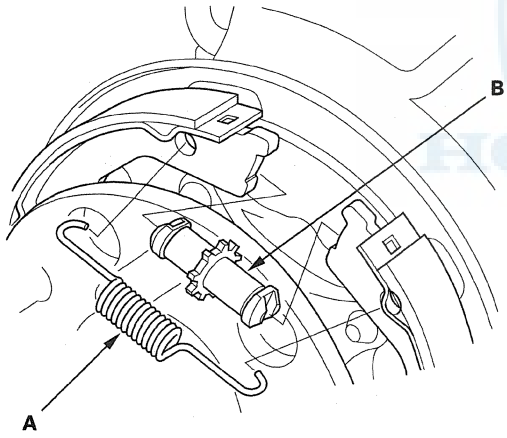

5. Remove the adjuster assembly (B).
6. Disconnect and remove the lower brake spring (A).

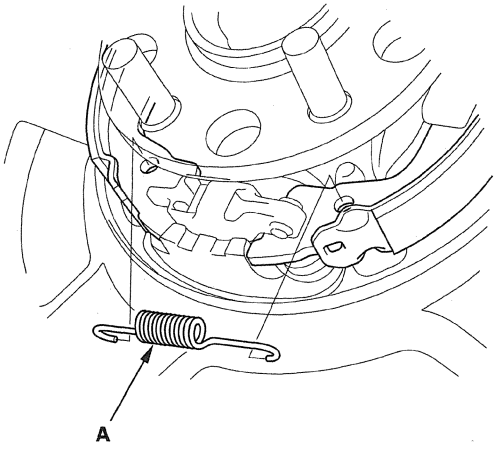

7. Remove the parking brake lever assembly (A), and disconnect it from the parking brake cable end (B).

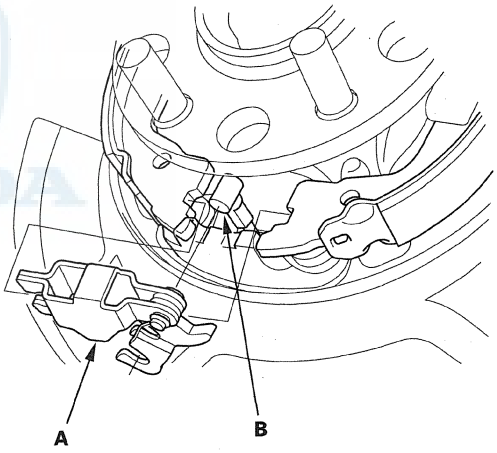

8. Remove the tension pins (A) by pushing the retainer springs (B) and turning the pins.

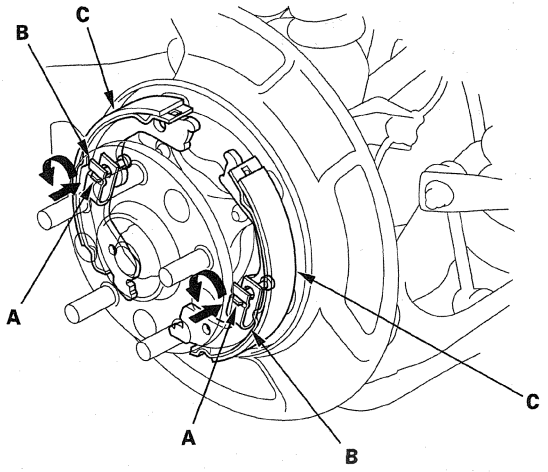

9. Remove the parking brake shoes (C).

Reassembly

1. Apply Molykote 44MA grease to the shoe ends and connecting rod ends (A), sliding surfaces (B), and opposite edges of the parking brake shoe (C) as shown. Wipe off any excess. Keep grease off the brake linings.

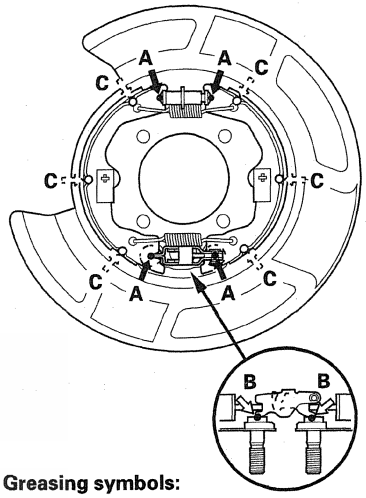

Greasing symbols:

➡● Brake shoe ends and connecting rod ends
⇨• Sliding surface
⇨○ Opposite edge of the shoe

2. Reinstall the tension pins (A) and retainer springs (B).

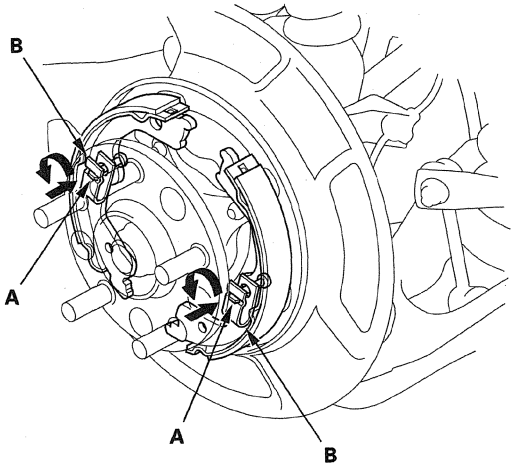

(cont'd)

Parking Brake Shoe Replacement (cont'd)

3. Connect the parking brake cable end (A) to the parking brake lever assembly (B), and install the parking brake lever assembly.

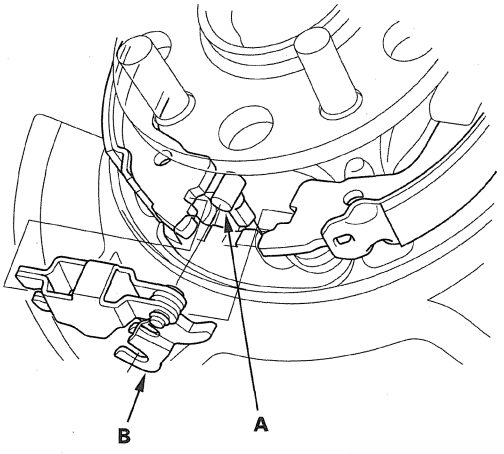

4. Reinstall the lower brake spring (A).

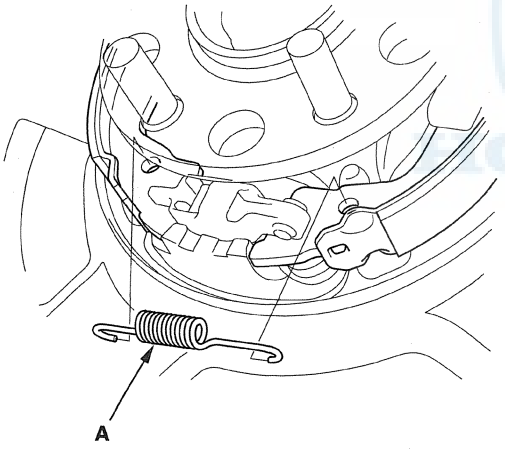

5. Clean the threaded portions of the clevis pin A, and coat the threads of the clevis pin A with grease. Clean the sliding surface of the clevis pin B, and coat the sliding surface of the clevis pin B with grease. Install the clevis pin A and pin B on the adjuster (C) and shorten the clevis pin A by turning the adjuster.

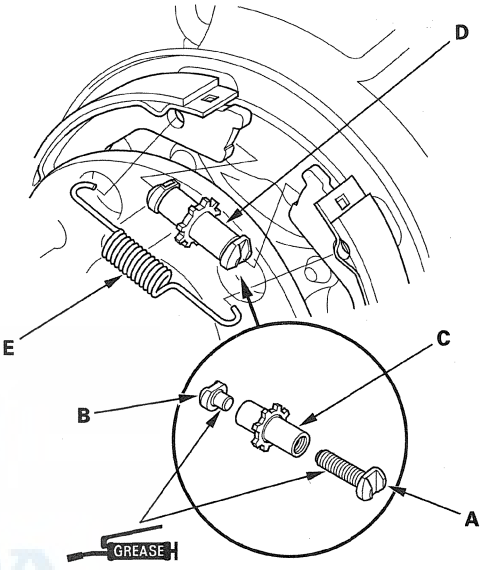

6. Position the brake shoe adjuster assembly (D) on the parking brake shoes.

7. Reinstall the upper brake spring (E).

8. Install the rear brake disc/drum and the rear brake caliper.

9. Do the major parking brake adjustment (see page 19-8).

Parking Brake Shoe Lining Break-in

⚠ WARNING

Do this operation in a safe area.

NOTE:
- Do the brake lining surface break-in when replacing shoes with new brake linings and/or new rear brake disc/drum.
- Check the number of parking brake lever clicks. Adjust the parking brake before lining surface break-in (see page 19-8).

1. Park the vehicle on a firm, level surface.
2. Do the major parking brake adjustment (see page 19-8).
3. Press the parking brake pedal (A) with 180 N·m (18.4 kgf·m, 133 lbf·ft).

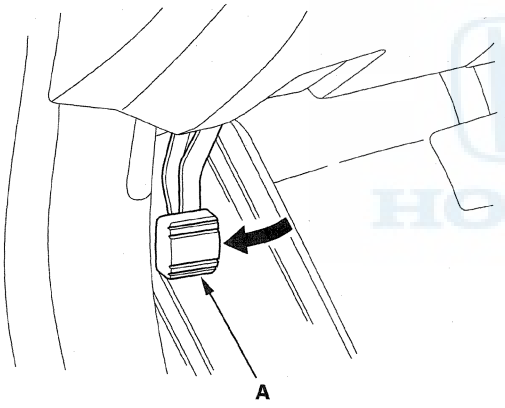

4. Drive the vehicle for 1/4 mile (400 m) at 31 mph (50 km/h).
5. Stop the vehicle, and release the parking brake for 5—10 minutes to allow the brake disc/drum to cool down.
6. Repeat steps 4 through 6 .
7. Check the parking brake pedal adjustment (see page 19-7).

Brake Pedal Replacement

1. Remove the lock pin (A) and the clevis pin (B).

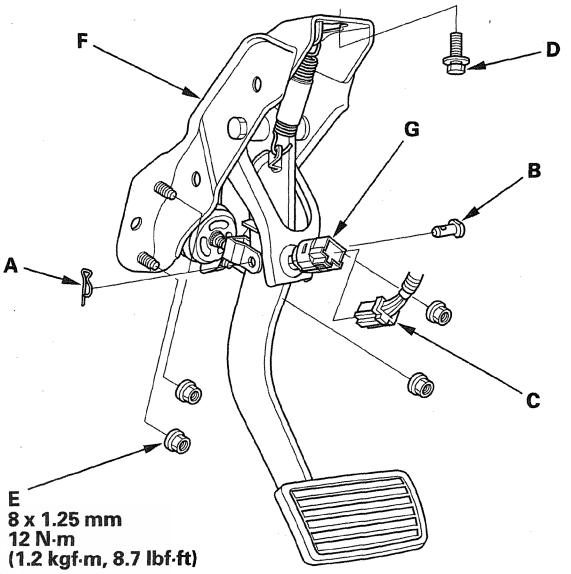

2. Disconnect the brake pedal position switch connector (C).
3. Remove the brake pedal bracket mounting bolt (D) and the nuts (E).
4. Remove the brake pedal with bracket (F).
5. Remove the brake pedal position switch (G) by turning it counterclockwise.
6. Install the brake pedal in the reverse order of removal.
7. Adjust the brake pedal and the brake pedal position switch (see page 19-6).

Brake Hose and Line Inspection

1. Inspect the brake hoses for damage, deterioration, leaks, interference, and twisting.
2. Check the brake lines for damage, rusting, and leaks. Also check for bent brake lines.
3. Check for leaks at the hose and line joints and connections, and retighten if necessary.
4. Check the master cylinder and the VSA modulator-control unit for damage and leakage.

NOTE: Replace the brake hose clip whenever the brake hose is serviced.

Connection Point	Component	Connected to	Specified Torque Value	Note
A	Front brake caliper	Brake line	15 N·m (1.5 kgf·m, 11 lbf·ft)	Flare nut
		Bleed screw	8 N·m (0.8 kgf·m, 6 lbf·ft)	
B	Rear brake caliper	Brake line	15 N·m (1.5 kgf·m, 11 lbf·ft)	Flare nut
		Bleed screw	7 N·m (0.7 kgf·m, 5 lbf·ft)	
C	4-way joint (without ACC)	Brake line	15 N·m (1.5 kgf·m, 11 lbf·ft)	Flare nut
	Brake fluid pressure sensor (with ACC)			
D	Brake hose	Brake line	15 N·m (1.5 kgf·m, 11 lbf·ft)	Flare nut
E	Master cylinder	Brake line	22 N·m (2.2 kgf·m, 16 lbf·ft)	Flare nut
F	VSA modulator-control unit	Brake line (12 mm nut)	22 N·m (2.2 kgf·m, 16 lbf·ft)	Flare nut
		Brake line (10 mm nut)	15 N·m (1.5 kgf·m, 11 lbf·ft)	Flare nut

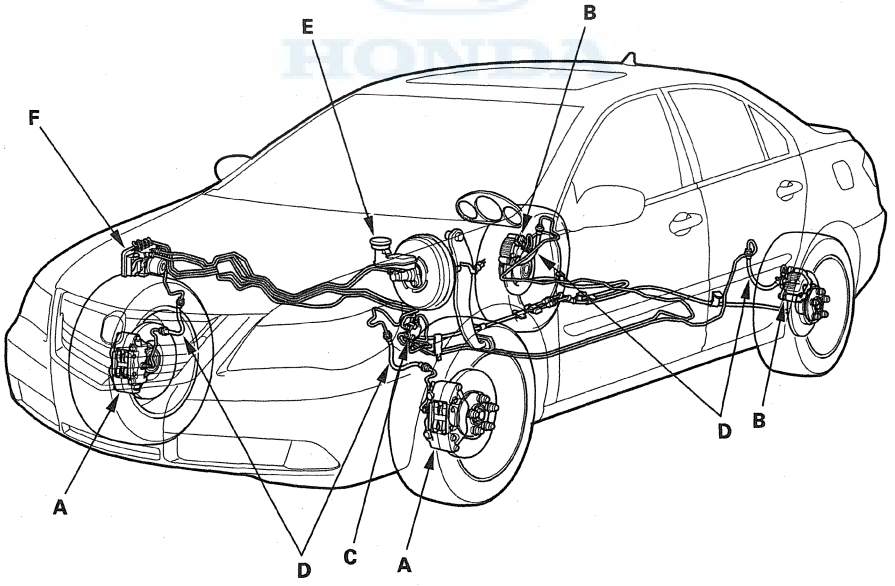

Brake Hose Replacement

NOTE:
- Before reassembling, check that all parts are free of dirt and other foreign particles.
- Replace parts with new ones whenever specified to do so.
- Do not spill brake fluid on the vehicle; it may damage the paint. If brake fluid gets on the paint, wash it off immediately with water.
- To prevent the brake fluid from leaking out, plug or cover the hose ends and joints with a shop towel or equivalent.

1. Replace the brake hose (A) if the hose is twisted, cracked, or leaking.

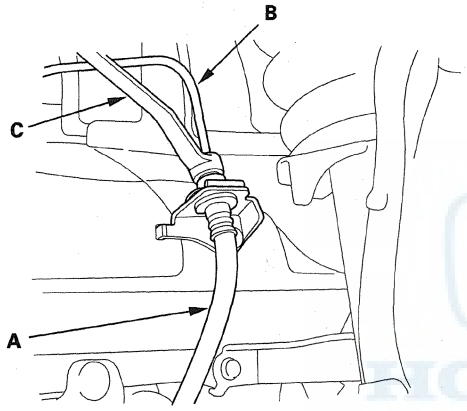

2. Disconnect the brake hose from the brake line (B) using a 10 mm flare-nut wrench (C).

3. Remove and discard the brake hose clips (A) from the brake hose (B).

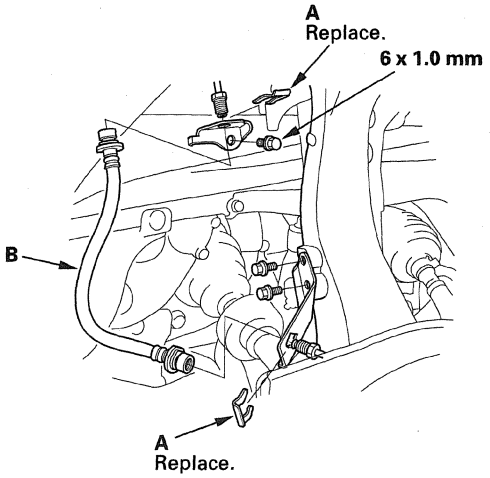

4. Remove the brake hose from the brake brackets.

5. Install the brake hose (A) on the brake hose brackets (B) with new brake hose clips (C).

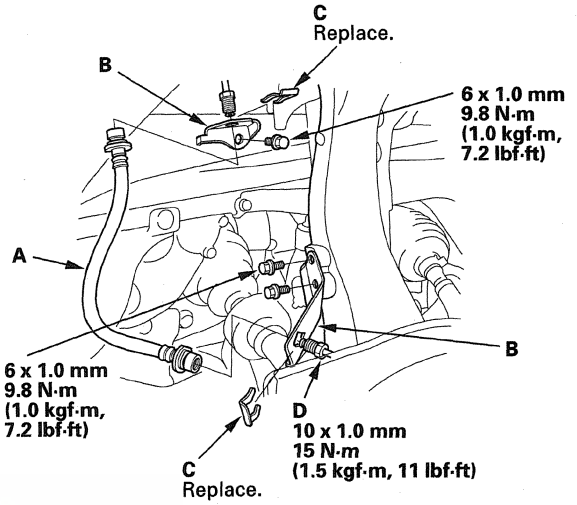

6. Connect the brake line (D) to the brake hose.

7. Install the brake hose (A) on the upper brake hose bracket (B) with a new brake hose clip (C).

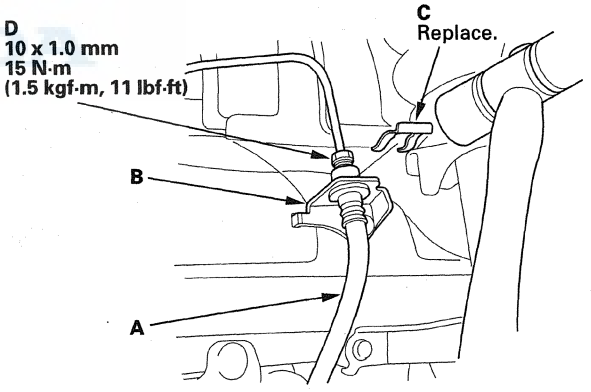

8. Connect the brake line (D) to the brake hose.

9. After installing the brake hose, bleed the brake system (see page 19-9).

10. Do the following checks:
    - Check the brake hose and line joint for leaks, and tighten if necessary.
    - Check the brake hoses for interference and twisting.

Parking Brake Cable Replacement

Exploded View

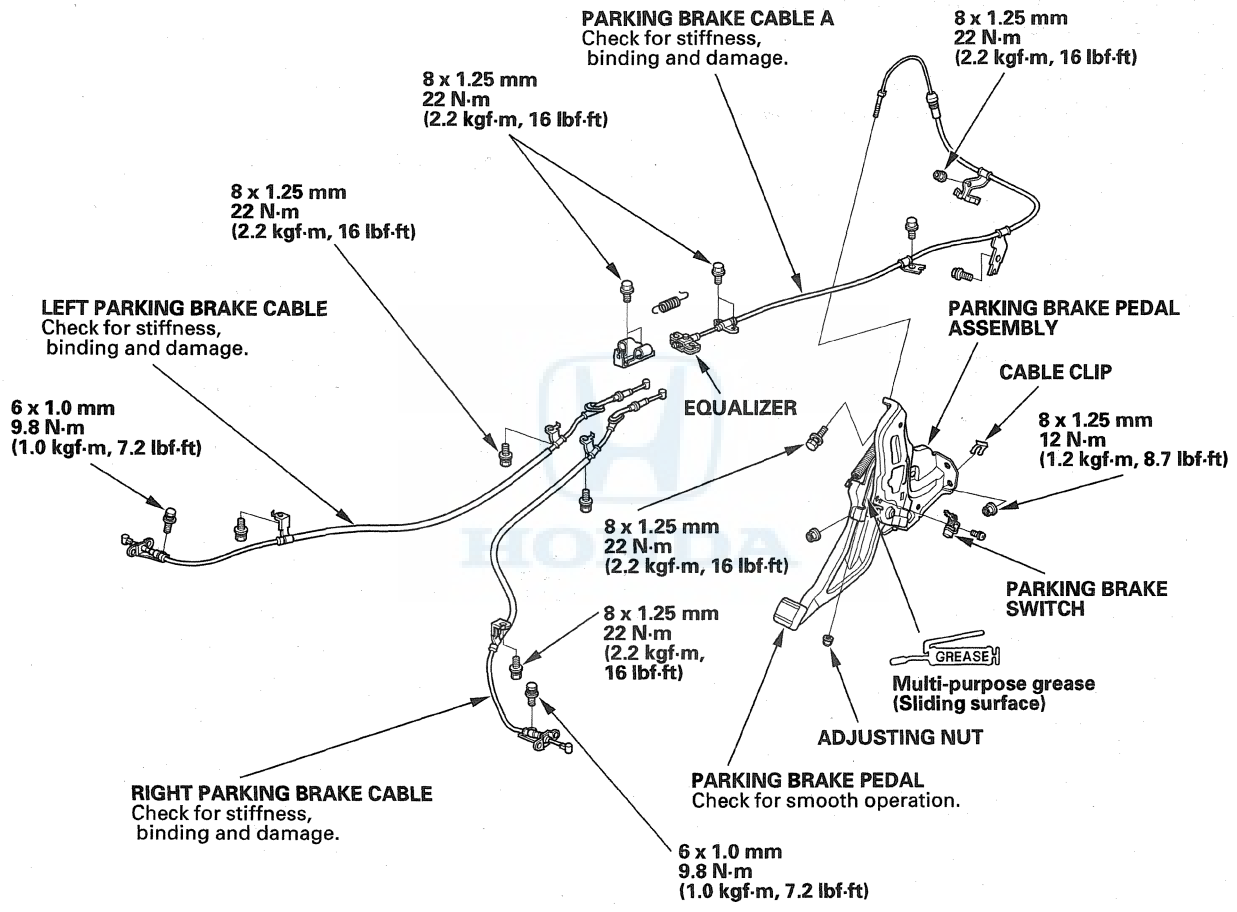

Replacement

NOTE: The parking brake cable must not be bent or distorted. This will lead to stiff operation and premature cable failure. Refer to the Exploded View as needed during this procedure.

1. Remove the parking brake shoes, and disconnect the parking brake cable from the parking brake lever assembly (see page 19-34).

2. Remove the parking brake cable mounting bolts from the backing plate (A), and remove the parking brake cable bracket (B).

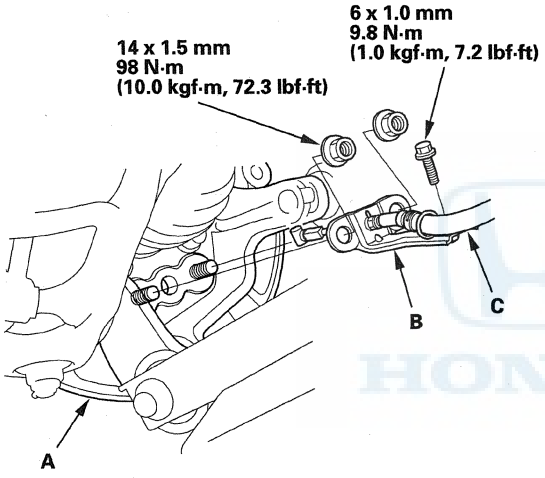

3. Remove the parking brake cable (C) from the parking brake cable bracket.

4. Install the parking brake cable in the reverse order of removal, and adjust the parking brake (see page 19-7). Apply the parking brake firmly 10 times, then adjust it again.


HONDA

Brakes

Conventional Brake Components 19-1

VSA (Vehicle Stability Assist) System Components

Component Location Index 19-44
General Troubleshooting Information 19-46
DTC Troubleshooting Index 19-49
Symptom Troubleshooting Index 19-50
System Description 19-51
Circuit Diagram 19-62
DTC Troubleshooting 19-65
Symptom Troubleshooting 19-95
Steering Angle Sensor Replacement 19-102
Yaw Rate-Lateral/Longitudinal Acceleration Sensor Replacement 19-103
VSA Sensor Neutral Position Memorization 19-104
VSA OFF Switch Test 19-104
VSA Modulator-Control Unit Removal and Installation 19-105
Wheel Speed Sensor Inspection 19-108
Wheel Speed Sensor Replacement 19-109



VSA System Components

Component Location Index

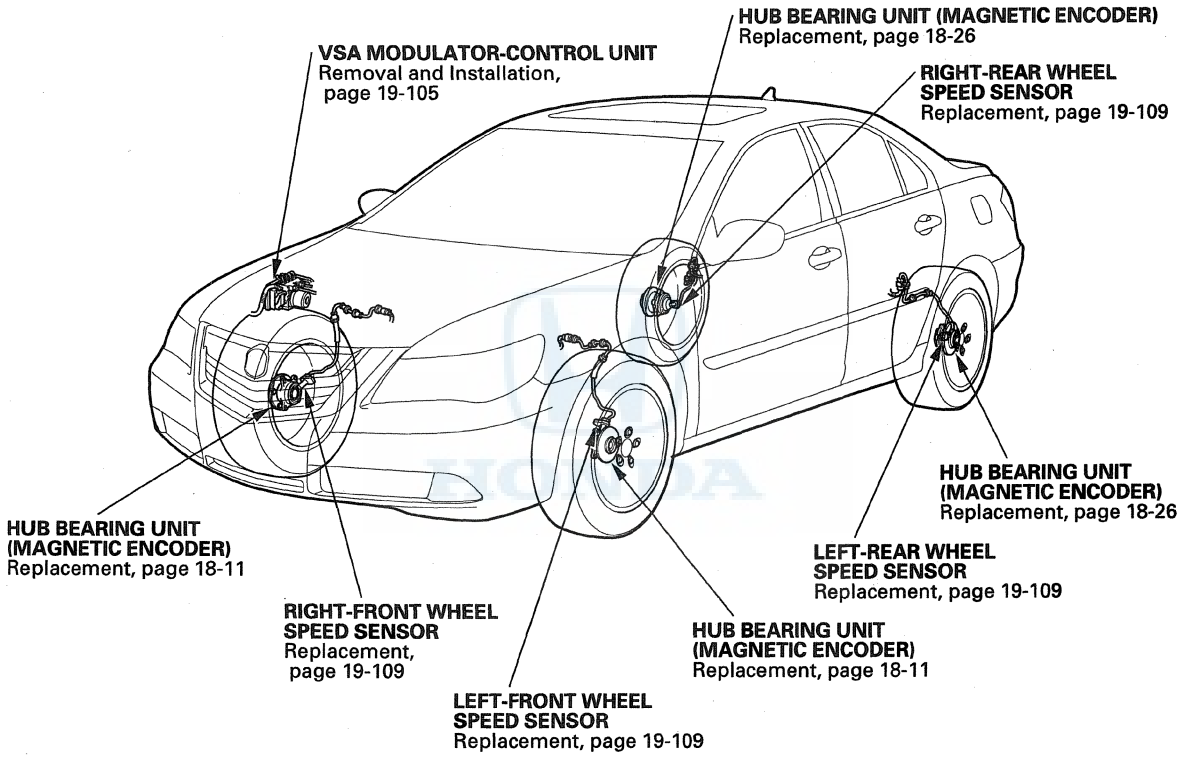

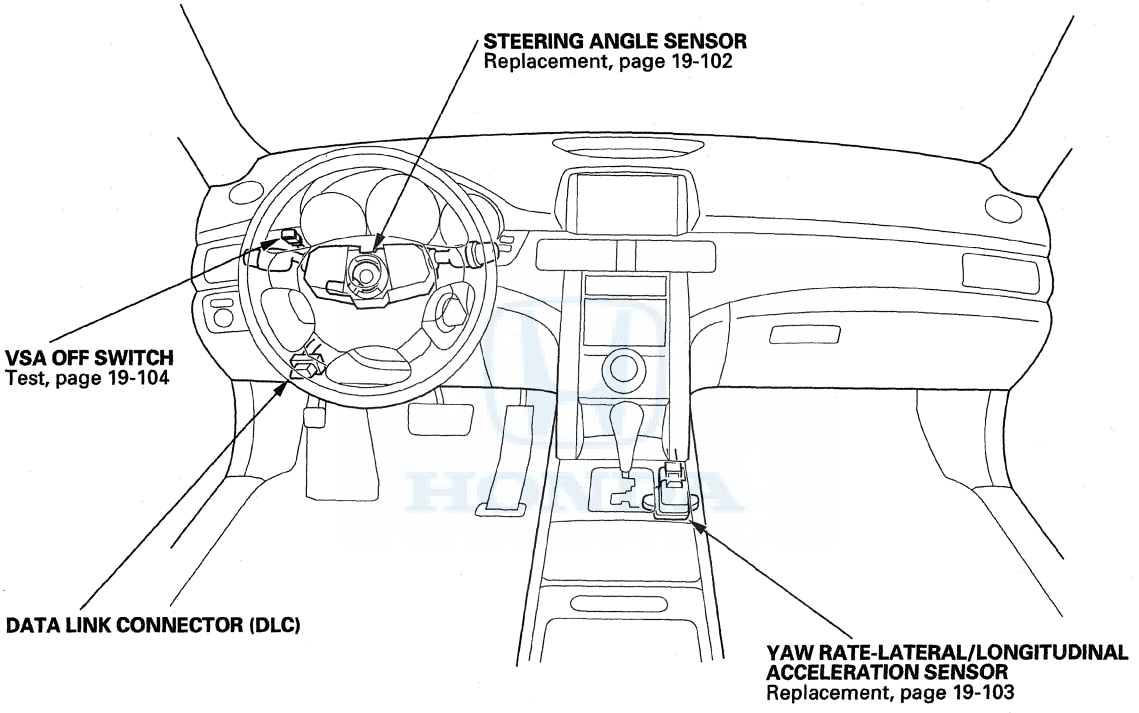
STEERING ANGLE SENSOR
Replacement, page 19-102
VSA OFF SWITCH
Test, page 19-104
DATA LINK CONNECTOR (DLC)
YAW RATE-LATERAL/LONGITUDINAL
ACCELERATION SENSOR
Replacement, page 19-103

VSA System Components

General Troubleshooting Information

System Indicator

This system has four indicators: the ABS indicator (A), the VSA indicator (B), the VSA activation indicator (C) and the brake system indicator (D). When the system detects a problem, it illuminates the appropriate indicators. Depending on the failure, the control unit determines which indicators are turned on.

- When ABS function is lost:
  ABS indicator, VSA indicator, and VSA activation indicators turn on.
- When VSA function is lost:
  VSA indicator and VSA activation indicators turn on.
- When all functions are lost:
  All four indicators turn on.
- When the gauge control module detects F-CAN circuit problem:
  VSA indicator and brake system indicators turn on.

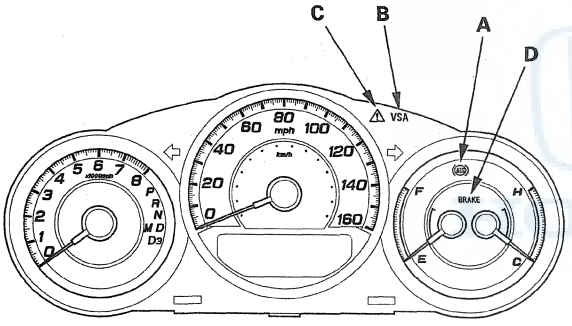

ABS/VSA Indicator

- If the system is OK, the ABS and VSA indicators will go off 2 seconds after turning the ignition switch to ON (II).
- The ABS and VSA indicators come on when the control unit detects a problem in the system. However, even though the system is operating properly, the activation indicator may come on under these conditions:
  - One drive wheel is stuck.
  - The vehicle goes into a spin.
  - The ABS or VSA continues to operate for a long time.
  - The vehicle is subjected to an electrical signal disturbance.
  - The VSA switch has been manually turned off.
  - When an abnormality in the TPMS (Tire Pressure Monitoring System) or low tire pressure is detected, VSA functions cannot be cancelled by pressing the VSA OFF switch.

To determine the actual cause of the problem, question the client about the problem, taking these conditions into consideration.

- When a problem is detected and the ABS indicator and VSA indicator come on, there are cases when the indicator stays on until the ignition switch is turned to LOCK (0), and cases when the indicator goes off automatically when the system returns to normal.
  - DTC 61 or 62:
    The ABS and VSA indicators go off automatically when the system returns to normal.
  - DTC 11, 13, 15, 17, 31, 32, 33, 34, 35, 36, 37, 38, 53, 54, 71, 81, 112, 121, 122, 123 or 124:
    The ABS and VSA indicators stay on until the ignition switch is turned to LOCK (0) whether or not the system returns to normal.
  - DTC 12, 14, 16, 18, 21, 22, 23, 24, 41, 42, 43, 44, 51 or 52:
    The ABS and VSA indicators stay on until the system returns to normal after the vehicle is driven.
  - DTC 25, 26, 27, 28, 64, 65, 66, 68, 83, 84 or 86:
    The VSA indicators stay on until the ignition switch is turned to LOCK (0) whether or not the system returns to normal.

Diagnostic Trouble Code (DTC)

- The memory holds all DTCs. However, when the same DTC is detected more than once, the more recent DTC is written over the earlier one. Therefore, when the same problem is detected repeatedly, it is memorized as a single DTC.
- The DTCs are indicated in ascending number order, not in the order they occur.
- The DTCs are memorized in the EEPROM. Therefore, the memorized DTCs cannot be erased by disconnecting the battery. Do the specified procedures to clear the DTCs.

Self-diagnosis

- Self-diagnosis can be classified into two categories:
  - Initial diagnosis: Done right after the ignition switch is turned to ON (II) and until the ABS and VSA indicators go off.
  - Regular diagnosis: Done right after the initial diagnosis until the ignition switch is turned to LOCK (0).
- When the system detects a problem, the VSA modulator-control unit shifts to fail-safe mode.

Kickback

The pump motor operates when the VSA modulator-control unit is functioning, and the fluid in the reservoir is forced out to the master cylinder, causing kickback at the brake pedal.

Pump Motor

- The pump motor operates when the VSA modulator-control unit is functioning.
- The VSA modulator-control unit checks the pump motor operation one time after completing initial diagnosis during regular diagnosis when the vehicle is driven over 10 mph (15 km/h).

Brake Fluid Replacement/Air Bleeding

Brake fluid replacement and air bleeding procedures are identical to the procedures used on vehicles without the VSA system (see page 19-9).

How to Troubleshoot DTCs

The troubleshooting procedures assume that the cause of the problem is still present, and the ABS and/or VSA indicator is still on. Following a troubleshooting procedure for a code that has been cleared but does not reset can result in incorrect diagnosis.

NOTE: Always troubleshoot fuel and emissions DTCs first.

1. Question the client about the conditions when the problem occurred, and try to reproduce the same conditions for troubleshooting. Find out when the ABS and/or VSA indicator came on, such as during activation, after activation, when the vehicle was traveling at a certain speed, etc. If necessary, have the client demonstrate the concern.

2. When the ABS or VSA indicator does not come on during the test-drive, check for loose connectors, poor contact of the terminals, etc. in the circuit indicated by the DTC before you start troubleshooting.

3. After troubleshooting, or the repairs are done, clear the DTCs, and test-drive the vehicle under the same conditions that originally set the DTCs. Make sure the ABS and VSA indicators do not come on.

4. Check for DTCs from other systems which are connected via F-CAN. If there are DTCs that are related to F-CAN, one possible cause was that the ignition switch was turned to ON (II) with the VSA modulator-control unit connector disconnected. Clear the DTCs. Check for fuel and emissions or powertrain DTCs first.

Intermittent Failures

The term "intermittent failure" means a system may have had a failure, but it checks OK now. If you cannot reproduce the condition, check for loose connections and terminals. Also check for ground and power connections related to the circuit that you are troubleshooting.

(cont'd)

General Troubleshooting Information (cont'd)

How to Use the HDS (Honda Diagnostic System)

NOTE: Make sure the battery is in good condition and fully charged.

1. If the system indicators stay on, connect the HDS to the data link connector (DLC) (A) located under the driver's side of the dashboard.

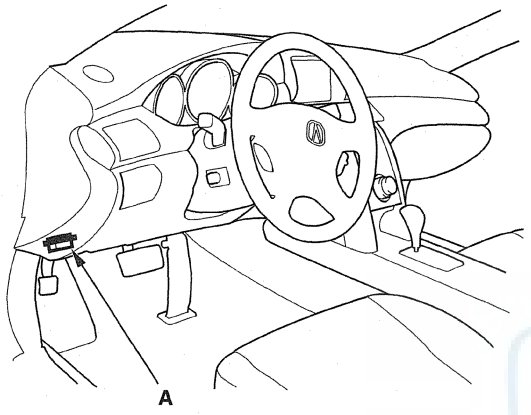

2. Turn the ignition switch to ON (II).
3. Make sure the HDS communicates with the vehicle and the VSA modulator-control unit. If it doesn't, troubleshoot the DLC circuit (see page 11-211).
4. Check the diagnostic trouble code (DTC) and note it. Also check the on-board snapshot data, and download any data found. Then refer to the indicated DTC's troubleshooting, and do the appropriate troubleshooting procedure.

   NOTE:
   - The HDS can read the DTC, the current data, and other system data.
   - For specific operations, refer to the Help menu that came with the HDS.

How to Retrieve DTCs

1. With the ignition switch in LOCK (0), connect the HDS to the data link connector (DLC) under the driver's side of the dashboard.
2. Turn the ignition switch to ON (II).
3. Make sure the HDS communicates with the vehicle and the VSA modulator-control unit. If it doesn't, troubleshoot the DLC circuit (see page 11-211).
4. Follow the prompts on the HDS to display the DTC(s) on the screen. After determining the DTC, refer to the DTC troubleshooting. Do the all systems DTC check, and troubleshoot any powertrain DTCs first.
5. Turn the ignition switch to LOCK (0).

How to Clear DTCs

1. With the ignition switch in LOCK (0), connect the HDS to the data link connector (DLC) under the driver's side of the dashboard.
2. Turn the ignition switch to ON (II).
3. Make sure the HDS communicates with the vehicle and the VSA modulator-control unit. If it doesn't, troubleshoot the DLC circuit (see page 11-211).
4. Clear the DTC(s) by following the screen prompts on the HDS.
5. Turn the ignition switch to LOCK (0).

DTC Troubleshooting Index

DTC	Detection Item	Note
11	Right-front Wheel Speed Sensor (Short to Power/Short to Body Ground/ Open)	(see page 19-65)
12	Right-front Wheel Speed Sensor (Electrical Noise/Intermittent Interruption)	(see page 19-69)
13	Left-front Wheel Speed Sensor (Short to Power/Short to Body Ground/ Open)	(see page 19-65)
14	Left-front Wheel Speed Sensor (Electrical Noise/Intermittent Interruption)	(see page 19-69)
15	Right-rear Wheel Speed Sensor (Short to Power/Short to Body Ground/ Open)	(see page 19-65)
16	Right-rear Wheel Speed Sensor (Electrical Noise/Intermittent Interruption)	(see page 19-69)
17	Left-rear Wheel Speed Sensor (Short to Power/Short to Body Ground/ Open)	(see page 19-65)
18	Left-rear Wheel Speed Sensor (Electrical Noise/Intermittent Interruption)	(see page 19-69)
21	Right-front Magnetic Encoder (Wheel Bearing)	(see page 19-71)
22	Left-front Magnetic Encoder (Wheel Bearing)	(see page 19-71)
23	Right-rear Magnetic Encoder (Wheel Bearing)	(see page 19-71)
24	Left-rear Magnetic Encoder (Wheel Bearing)	(see page 19-71)
25	Yaw Rate Sensor	(see page 19-72)
26	Lateral Acceleration Sensor	(see page 19-74)
27	Steering Angle Sensor	(see page 19-76)
28	Longitudinal Acceleration Sensor	(see page 19-77)
31	ABS Solenoid	(see page 19-79)
32	ABS Solenoid	(see page 19-79)
33	ABS Solenoid	(see page 19-79)
34	ABS Solenoid	(see page 19-79)
35	ABS Solenoid	(see page 19-79)
36	ABS Solenoid	(see page 19-79)
37	ABS Solenoid	(see page 19-79)
38	ABS Solenoid	(see page 19-79)
41	Right-front Wheel Lock	(see page 19-80)
42	Left-front Wheel Lock	(see page 19-80)
43	Right-rear Wheel Lock	(see page 19-80)
44	Left-rear Wheel Lock	(see page 19-80)
51	Motor Lock	(see page 19-80)
52	Motor Stuck OFF	(see page 19-80)
53	Motor Stuck ON	(see page 19-82)
54	Fail-safe Relay	(see page 19-83)
61	Low +B-FSR Voltage	(see page 19-84)
62	High +B-FSR Voltage	(see page 19-84)
64	Sensor Power Voltage	(see page 19-85)
65	Brake Fluid Level	(see page 19-86)
66	VSA Pressure Sensor (Inside of VSA Modulator-Control Unit)	(see page 19-86)
68	Brake Pedal Position Switch	(see page 19-87)
71	Different Diameter Tire	(see page 19-88)
81	Central Processing Unit (CPU)	(see page 19-88)
83	PCM	(see page 19-90)
84	VSA Sensor Neutral Position	(see page 19-91)
86	F-CAN Communication	(see page 19-91)
107	TCS Operation	(see page 19-93)
108	VSA Operation	(see page 19-93)
112	Internal Power Source Stuck OFF	(see page 19-93)
121	VSA Solenoid	(see page 19-94)
122	VSA Solenoid	(see page 19-94)
123	VSA Solenoid	(see page 19-94)
124	VSA Solenoid	(see page 19-94)

Symptom Troubleshooting Index

Symptom	Diagnostic procedure
ABS indicator does not come on	Symptom Troubleshooting (see page 19-95)
ABS indicator does not go off, and no DTCs are stored	Symptom Troubleshooting (see page 19-95)
Brake system indicator does not come on (check bulb operation with parking brake)	Symptom Troubleshooting (see page 19-97)
Brake system indicator does not go off, and no DTCs are stored	Symptom Troubleshooting (see page 19-98)
VSA indicator does not come on	Symptom Troubleshooting (see page 19-98)
VSA indicator does not go off, and no DTCs are stored	Symptom Troubleshooting (see page 19-99)
VSA activation indicator does not come on at start-up (bulb check)	Symptom Troubleshooting (see page 19-100)
VSA activation indicator does not go off, and no DTCs are stored	Symptom Troubleshooting (see page 19-101)
HDS does not communicate with the VSA modulator-control unit or the vehicle	Troubleshoot the DLC circuit (see page 11-211).

System Description

VSA Modulator-Control Unit Inputs and Outputs for 47P Connector (Connector Disconnected)

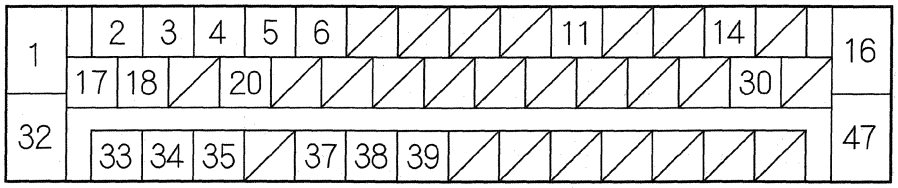

Wire side of female terminals

Terminal number	Wire color	Terminal sign	Description	Signal
1	WHT	FSR +B	Power source for the fail-safe relay	Battery voltage (about 12 V) at all times
2	YEL	RL +B	Detects left-rear wheel speed sensor signal	———
3	RED	RL-GND		
4	RED	FL +B	Detects left-front wheel speed sensor signal	
5	PNK	RR +B	Detects right-rear wheel speed sensor signal	
6	BRN	RR-GND		
11	BLU	K-LINE	Communications with HDS	———
14	WHT	CANH	F-CAN communication circuit	———
16	RED	MR +B	Power source for the motor relay	Battery voltage (about 12 V) at all times
17	PNK	FR-GND	Detects right-front wheel speed sensor signal	———
18	GRN	FR +B		
20	GRN	FL-GND	Detects left-front wheel speed sensor signal	———
30	RED	CANL	F-CAN communication circuit	———

(cont'd)

System Description (cont'd)

VSA Modulator-Control Unit Inputs and Outputs for 47P Connector (Connector Disconnected)

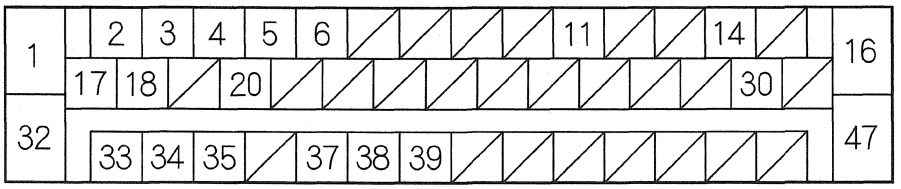

Wire side of female terminals

Terminal number	Wire color	Terminal sign	Description	Signal
32	BLK	GND	Ground for the VSA modulator-control unit	Continuity
33	BRN	SGND	Ground for the sensors	Continuity
34	YEL	YAW	Detects yaw rate sensor signal	——
35	PNK	SVCC	Power source for the sensors	——
37	GRN	GLAT	Detects lateral acceleration sensor signal	——
38	YEL	IG1	Power source for activating the system	With ignition switch in ON (II): battery voltage (about 12 V)
39	WHT	GLONG	Detects longitude acceleration sensor signal	——
47	BLK	MR-GND	Ground for the pump motor	Continuity

ABS (Anti-lock Brake System) Features

When the brake pedal is pressed while driving, the wheels can lock before the vehicle comes to a stop. In such an event, the maneuverability of the vehicle is reduced if the front wheels are locked, and the stability of the vehicle is reduced if the rear wheels are locked, creating an extremely unstable condition. The ABS precisely controls the slip rate of the wheels to ensure maximum grip force from the tires, and it thereby ensures maneuverability and stability of the vehicle.
The ABS calculates the slip rate of the wheels based on the vehicle speed and the wheel speed, then it controls the brake fluid pressure to reach the target slip rate.

Grip Force of Tire and Road Surface

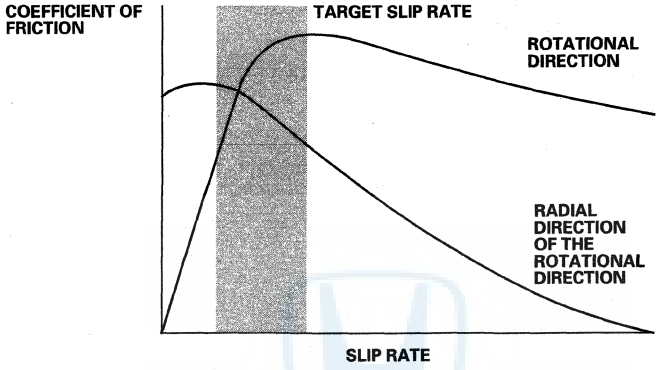

TCS (Traction Control System) Features

The TCS provides low-speed traction. When a drive wheel loses traction on a slippery road surface and starts to spin, the VSA modulator-control unit applies brake pressure to slow the spinning wheel. At that time, the VSA modulator-control unit sends a traction control signal to the PCM to reduce engine power.

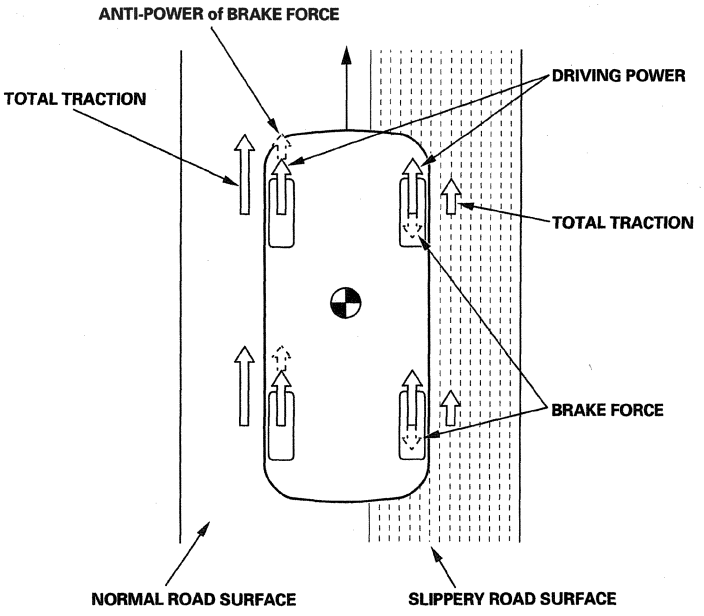

(cont'd)

System Description (cont'd)

VSA (Vehicle Stability Assist) System Features

Oversteer control
Applies the brakes to the front and rear outside wheels

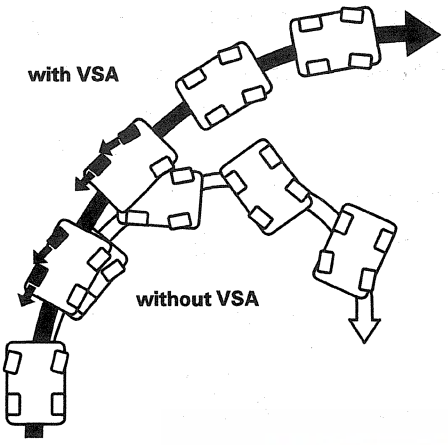

The brake makes the yaw rate opposite to the turning direction

Understeer control (in acceleration)
- Applies the brakes to the front and rear inside wheels
- Controls the engine torque

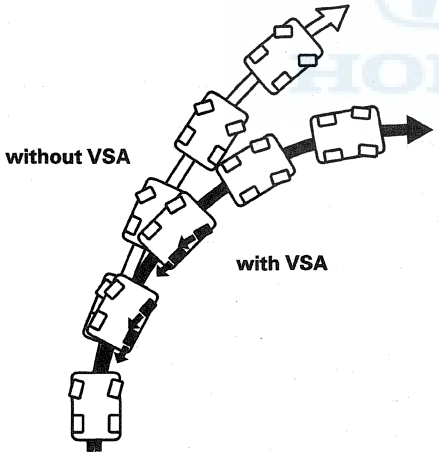

The brake increases the yaw rate toward the turning direction

The throttle control effect
- **reduces vehicle speed**
- **increases cornering force**

EBD (Electronic Brake Distribution)

EBD has been added to the VSA system. EBD eliminates the need for an external, mechanical proportioning valve and improves overall braking performance.

When the vehicle is heavily loaded, most of the increase in weight is born by the rear wheels, increasing braking capability. Proportioning valves maintain a fixed distribution of brake pressure between the front and the rear wheels, making it very difficult to fully utilize increased rear wheel braking capability. EBD varies brake pressure distribution according to load, using input from the wheel speed sensors, which improves overall braking performance.

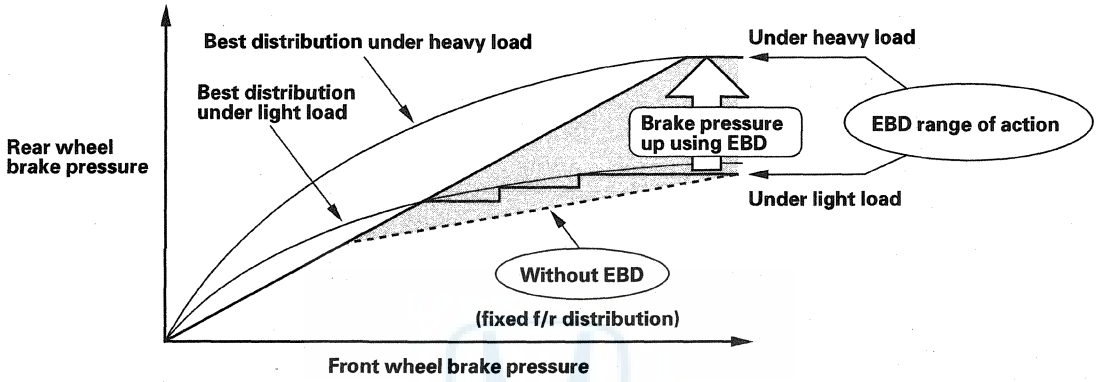

Normal Braking
Under normal braking conditions, brake pressure is evenly distributed between the front and rear brakes, and EBD is not used.

Firm Braking
Under hard braking conditions, the VSA modulator-control unit monitors wheel speed in order to allow a maximum amount of brake distribution individually to the rear wheels. Once the VSA modulator-control unit detects that one or both rear wheels are nearing their maximum braking potential, the inlet valve closes for one or both rear wheels, maintaining the current pressure. If the traction is improved, and the wheel(s) is no longer nearing its limits, the VSA modulator-control unit will open the inlet solenoid allowing additional pressure to be distributed to the rear wheel. The rear wheels are controlled independently of each other during EBD function.

If during EBD function the VSA modulator-control unit determines that the wheels are beginning to slip more than a predetermined amount, the control unit abandons EBD control and shifts to select low 3-channel ABS control.

(cont'd)

System Description (cont'd)

Brake Assist

Brake assist has been added to the VSA system. Brake assist helps ensure that any driver can achieve the full braking potential of the vehicle by increasing brake system pressure in a panic situation, bringing the vehicle into a full ABS stop.

Each time the ignition switch is turned ON (II), the VSA modulator-control unit learns the current driver's normal braking characteristics by monitoring the brake pressure sensor and the brake pedal position switch at each stop. Using these inputs and their values, the VSA modulator-control unit is able to learn the driver's normal braking habits, and then determine the difference between a normal stop and a panic stop for the individual driver of the vehicle. If during a panic stop the VSA modulator-control unit determines that the brake system pressure increases above a learned threshold in less than a learned amount of time, the VSA modulator-control unit engages brake assist.

Because the brake system pressure crossed the threshold before the time threshold had expired, the VSA modulator-control unit goes into brake assist mode.

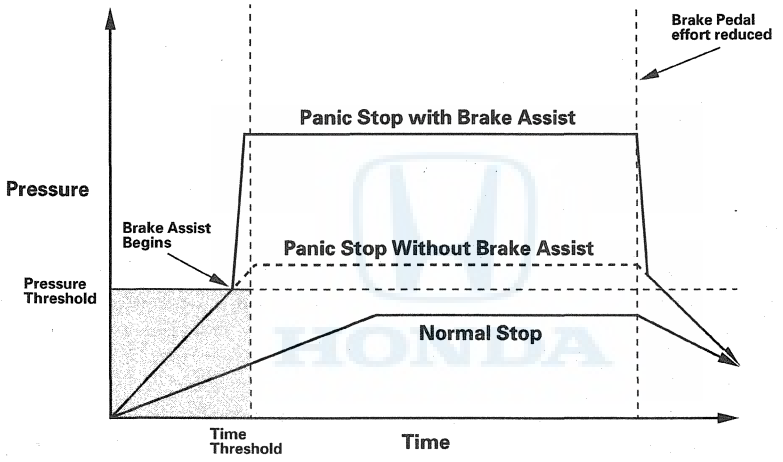

Normal Braking
During normal braking conditions, brake assist does not affect brake system pressure.

Panic Stop
During a panic stop, the control unit turns the VSA pump ON, and opens the inlet valve. This brings the brake system pressure up high enough to cause a full ABS stop. As soon as the brake pedal is released, brake assist is stopped and the brake system returns to normal operation.

Modulator Unit

The modulator unit consists of the inlet solenoid valve, the outlet solenoid valve, the VSA normally open (NO) solenoid valve, the VSA normally closed (NC) solenoid valve, the reservoir, the pump, the pump motor, and the damping chamber.
The modulator controls the caliper fluid pressure directly. It is a circulating-type modulator because the brake fluid circulates through the caliper, the reservoir, and the master cylinder.
The hydraulic control has three modes: Pressure intensifying, pressure retaining, and pressure reducing.
The hydraulic circuit is an independent four channel type, one channel for each wheel.

ABS Control

Pressure intensifying mode
VSA NO valve open, VSA NC valve closed, inlet valve open, outlet valve closed.
Master cylinder fluid is pumped out to the caliper.

Pump motor
When starting the pressure reducing mode, the pump motor is ON. When stopping ABS operation, the pump motor is OFF.
The reservoir fluid is pumped out by the pump, through the damping chamber, to the master cylinder.

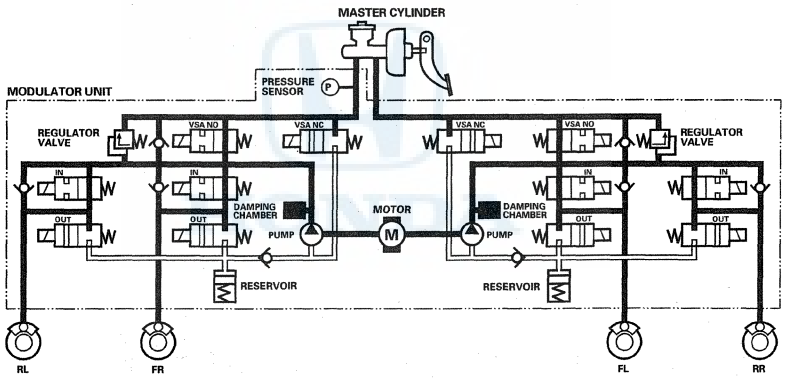

Pressure retaining mode
VSA NO valve open, VSA NC valve closed, inlet valve closed, outlet valve closed.
The caliper fluid is retained by the inlet valve and outlet valve.

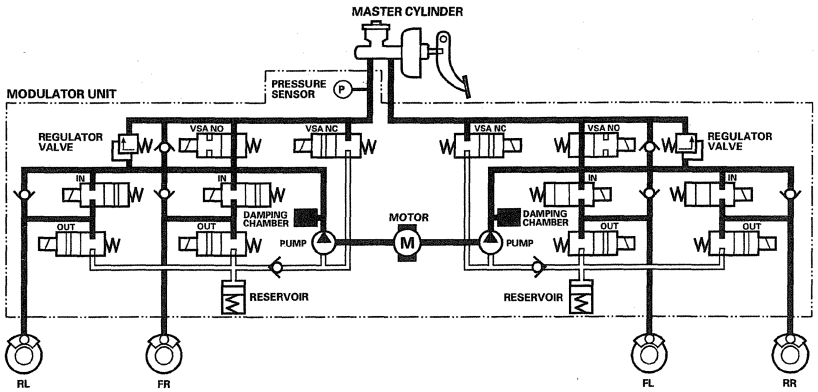

(cont'd)

System Description (cont'd)

Pressure reducing mode
VSA NO valve open, VSA NC valve closed, inlet valve closed, outlet valve open.
The caliper fluid flows through the outlet valve to the reservoir.

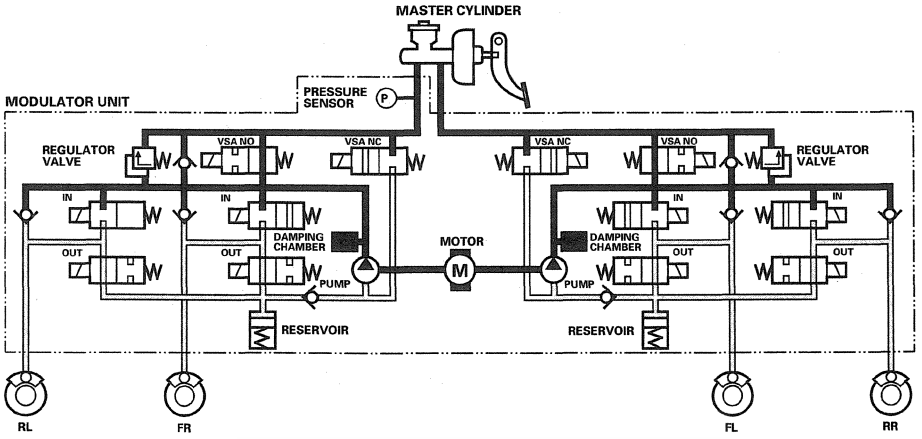

TCS Control

Pressure intensifying mode
VSA NO valve closed, VSA NC valve open, inlet valve open, outlet valve closed, pump motor ON.
The reservoir and the master cylinder fluid is pumped out by the pump, through the damping chamber, to the front caliper.

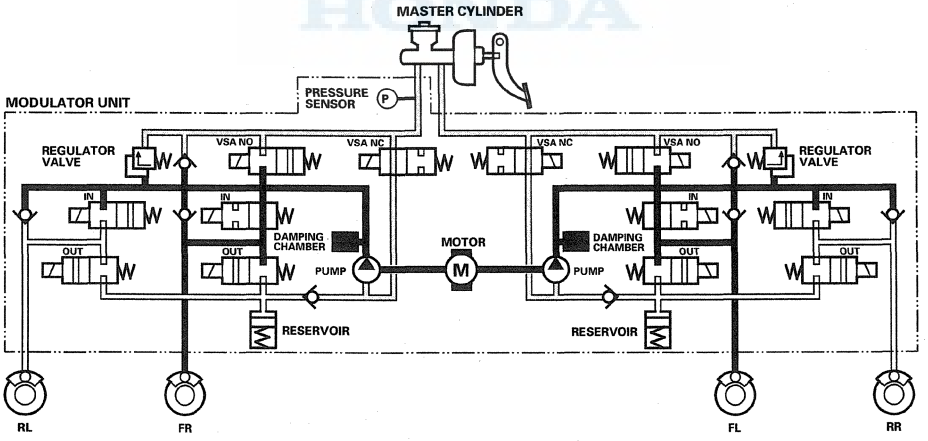

Pressure retaining mode

VSA NO valve closed, VSA NC valve open, inlet valve closed, outlet valve closed, pump motor ON.
Front caliper fluid is retained by the inlet valve and the outlet valve.

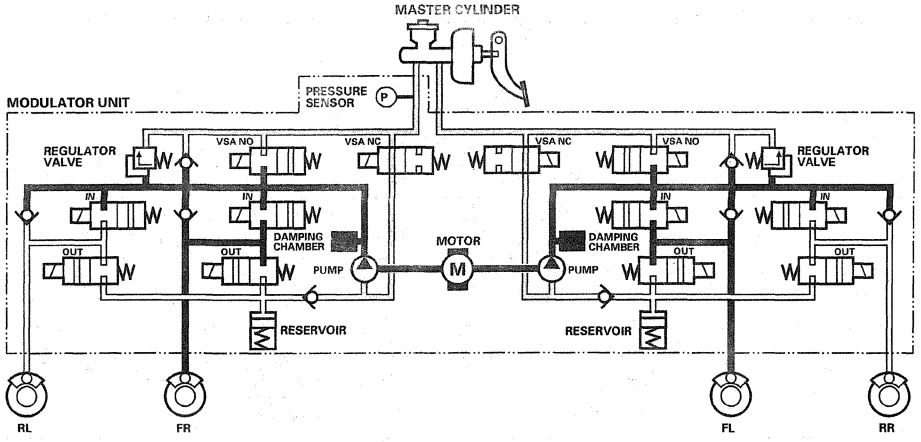

Pressure reducing mode

VSA NO valve open, VSA NC valve closed, inlet valve closed, front outlet valve open, pump motor ON.
The caliper fluid flows through the outlet valve to the reservoir.

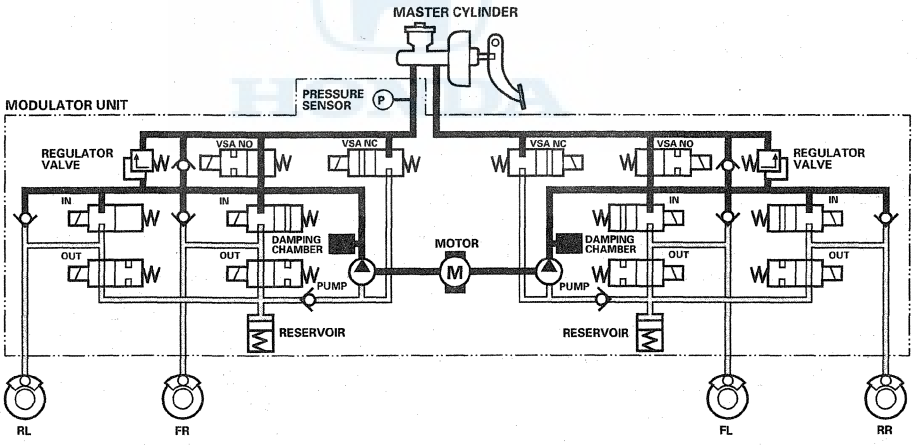

(cont'd)

System Description (cont'd)

VSA Control

Pressure intensifying mode
VSA NO valve closed, VSA NC valve open, inlet valve open, outlet valve closed, pump motor ON.
The reservoir and the master cylinder fluid is pumped out by the pump, through the damping chamber, to the front and rear calipers.

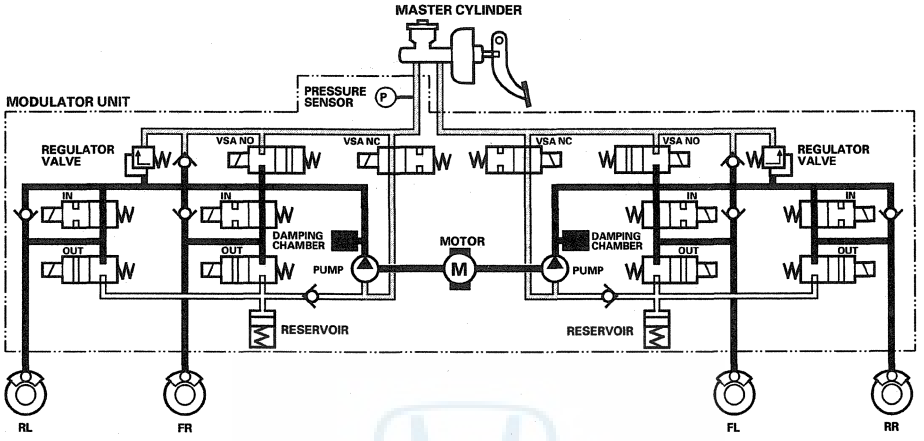

Pressure retaining mode
VSA NO valve closed, VSA NC valve open, inlet valve closed, outlet valve closed, pump motor ON.
The front and rear caliper fluid is retained by the inlet valve and the outlet valve.

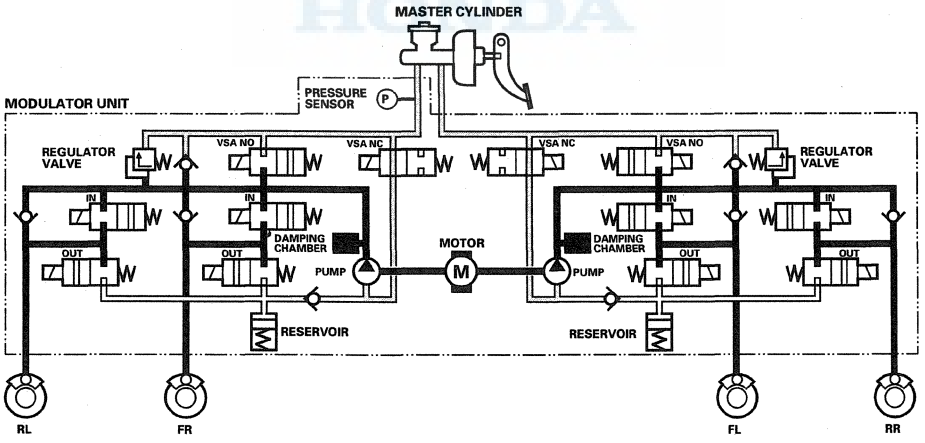

Pressure reducing mode

VSA NO valve open, VSA NC valve closed, inlet valve closed, outlet valve open, pump motor ON.
The caliper fluid flows through the outlet valve to the reservoir.

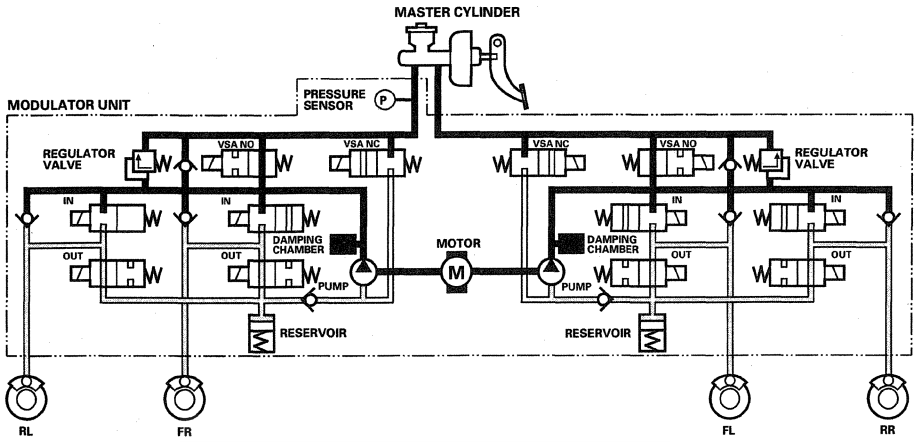

VSA System Components

Circuit Diagram

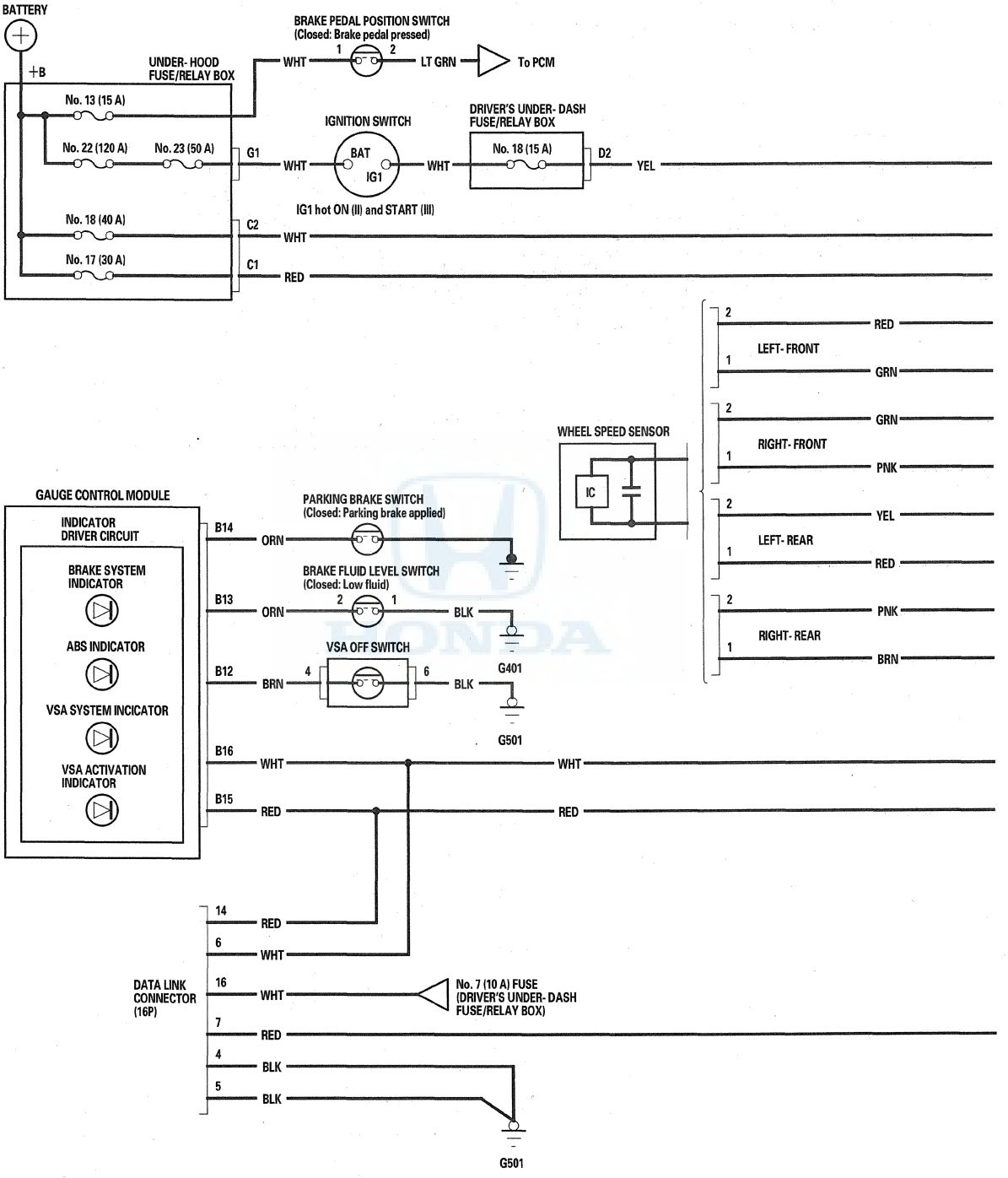

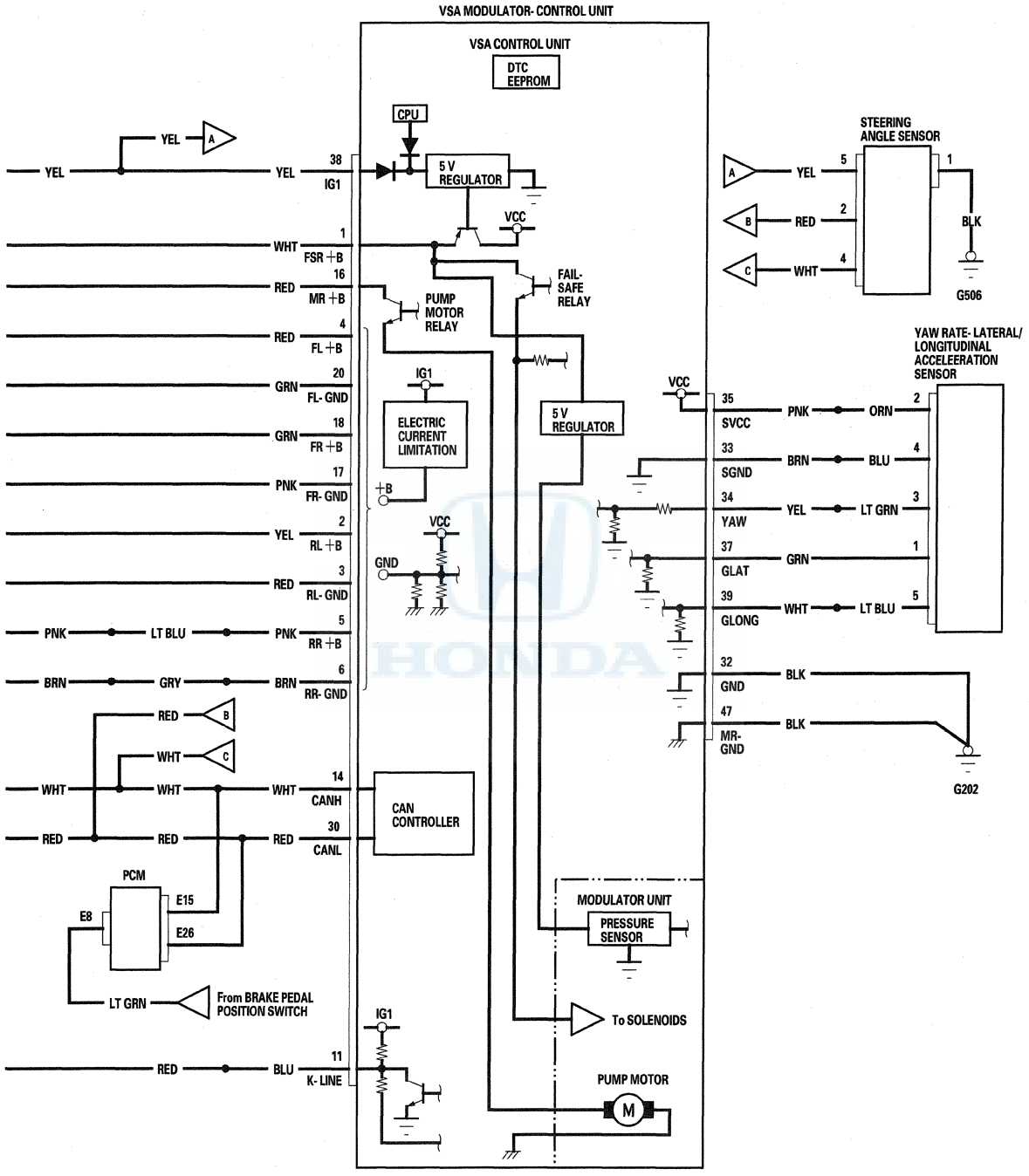
VSA MODULATOR- CONTROL UNIT
VSA CONTROL UNIT
DTC EEPROM
CPU
5 V REGULATOR
VCC
FAIL- SAFE RELAY
PUMP MOTOR RELAY
IG1
ELECTRIC CURRENT LIMITATION
+B
GND
CAN CONTROLLER
MODULATOR UNIT
PRESSURE SENSOR
To SOLENOIDS
PUMP MOTOR
M
STEERING ANGLE SENSOR
G506
YAW RATE- LATERAL/ LONGITUDINAL ACCELEERATION SENSOR
G202
PCM
E8
E15
E26
From BRAKE PEDAL POSITION SWITCH
YEL
WHT
RED
PNK
LT BLU
BRN
GRY
GRN
BLU
LT GRN
BLK
ORN
38 IG1
1 FSR +B
16 MR +B
4 FL +B
20 FL- GND
18 FR +B
17 FR- GND
2 RL +B
3 RL- GND
5 RR +B
6 RR- GND
14 CANH
30 CANL
11 K- LINE
35 SVCC
33 SGND
34 YAW
37 GLAT
39 GLONG
32 GND
47 MR- GND

(cont'd)

Circuit Diagram (cont'd)

UNDER-HOOD FUSE/RELAY BOX CONNECTOR C (2P)



BRAKE FLUID LEVEL SWITCH 2P CONNECTOR



BRAKE PEDAL POSITION SWITCH 4P CONNECTOR

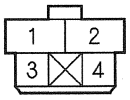

DRIVER'S UNDER-DASH FUSE/RELAY BOX CONNECTOR D (17P)

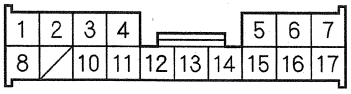

GAUGE CONTROL MODULE CONNECTOR B (28P)

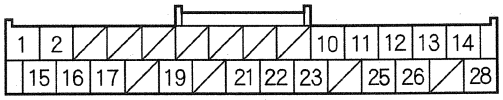

UNDER-HOOD FUSE/RELAY BOX CONNECTOR G (2P)



VSA OFF SWITCH 6P CONNECTOR

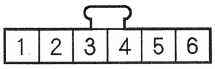

STEERING ANGLE SENSOR 5P CONNECTOR

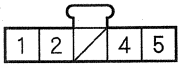

YAW RATE-LATERAL/LONGITUDINAL ACCELERATION SENSOR 5P CONNECTOR

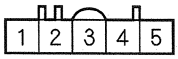

PCM CONNECTOR E (31P)

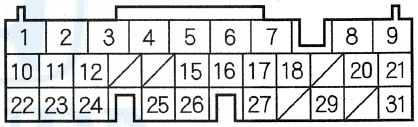

VSA MODULATOR-CONTROL UNIT 47P CONNECTOR

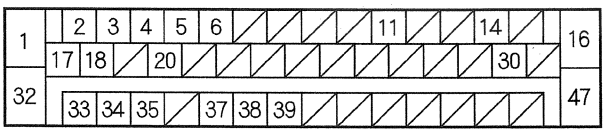

WHEEL SENSOR 2P CONNECTOR



Wire side of female terminals

DATA LINK CONNECTOR (16P)

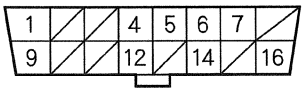

Terminal side of female terminals

DTC Troubleshooting

DTC 11, 13, 15, 17: Wheel Speed Sensor (Short to Power/Short to Body Ground/Open)

1. Turn the ignition switch to ON (II).
2. Clear the DTC with the HDS.
3. Turn the ignition switch to LOCK (0), then turn it to ON (II) again.
4. Test-drive the vehicle at 19 mph (30 km/h) or more.

   NOTE: Drive the vehicle on a straight section of road, not on a lift.
5. Check for DTCs with the HDS.

   Is DTC 11, 13, 15, and/or 17 indicated?

   YES—Go to step 6.

   NO—The system is OK at this time. Refer to intermittent failures (see page 19-47). Check for loose or poor connections. ■
6. Turn the ignition switch to LOCK (0).
7. Disconnect the VSA modulator-control unit 47P connector.
8. Turn the ignition switch to ON (II).
9. Measure the voltage between body ground and the appropriate wheel speed sensor +B and GND terminals of the VSA modulator-control unit 47P connector individually (see table).

DTC	Appropriate Terminal	
	+B	GND
11 (Right-front)	FR +B: No. 18	FR-GND: No. 17
13 (Left-front)	FL +B: No. 4	FL-GND: No. 20
15 (Right-rear)	RR +B: No. 5	RR-GND: No. 6
17 (Left-rear)	RL +B: No. 2	RL-GND: No. 3

VSA MODULATOR-CONTROL UNIT 47P CONNECTOR

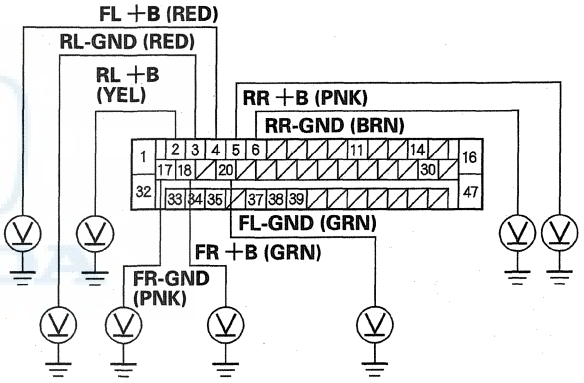

Wire side of female terminals

Is there 0.1 V or more?

YES—Repair a short to power in the wire between the VSA modulator-control unit and the appropriate wheel speed sensor. ■

NO—Go to step 10.

(cont'd)

DTC Troubleshooting (cont'd)

10. Turn the ignition switch to LOCK (0).

11. Check for continuity between body ground and the appropriate wheel speed sensor +B and GND terminals of the VSA modulator-control unit 47P connector individually (see table).

DTC	Appropriate Terminal	
	+B	GND
11 (Right-front)	FR +B: No. 18	FR-GND: No. 17
13 (Left-front)	FL +B: No. 4	FL-GND: No. 20
15 (Right-rear)	RR +B: No. 5	RR-GND: No. 6
17 (Left-rear)	RL +B: No. 2	RL-GND: No. 3

VSA MODULATOR-CONTROL UNIT 47P CONNECTOR

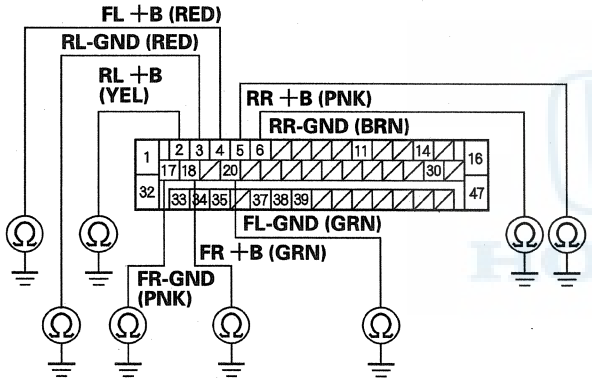

Wire side of female terminals

Is there continuity?

YES—Go to step 12.

NO—Go to step 14.

12. Disconnect the appropriate wheel speed sensor 2P connector.

13. Check for continuity between body ground and the appropriate wheel speed sensor +B and GND terminals of the VSA modulator-control unit 47P connector individually (see table).

DTC	Appropriate Terminal	
	+B	GND
11 (Right-front)	FR +B: No. 18	FR-GND: No. 17
13 (Left-front)	FL +B: No. 4	FL-GND: No. 20
15 (Right-rear)	RR +B: No. 5	RR-GND: No. 6
17 (Left-rear)	RL +B: No. 2	RL-GND: No. 3

VSA MODULATOR-CONTROL UNIT 47P CONNECTOR

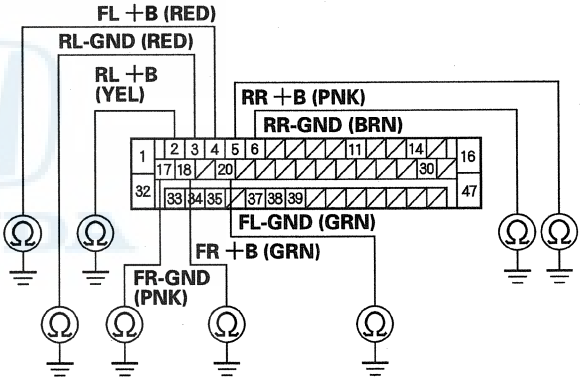

Wire side of female terminals

Is there continuity?

YES—Repair a short to body ground in the wire between the VSA modulator-control unit and the wheel speed sensor. ■

NO—Replace the appropriate wheel speed sensor (see page 19-109). ■

14. Disconnect the appropriate wheel speed sensor 2P connector.

15. Check for continuity between the appropriate wheel speed sensor +B and GND terminals of the VSA modulator-control unit 47P connector (see table).

DTC	Appropriate Terminal	
	+B	GND
11 (Right-front)	FR +B: No. 18	FR-GND: No. 17
13 (Left-front)	FL +B: No. 4	FL-GND: No. 20
15 (Right-rear)	RR +B: No. 5	RR-GND: No. 6
17 (Left-rear)	RL +B: No. 2	RL-GND: No. 3

VSA MODULATOR-CONTROL UNIT 47P CONNECTOR

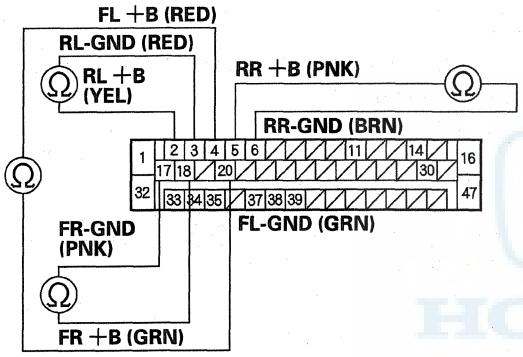

Wire side of female terminals

Is there continuity?

YES—Repair a short in the wires between the VSA modulator-control unit and the wheel speed sensor.■

NO—Go to step 16.

16. Connect the wheel speed sensor 2P connector terminals No. 1 and No. 2 to body ground with a jumper wire.

DTC	Appropriate Wheel Speed Sensor
11	Right-front
13	Left-front
15	Right-rear
17	Left-rear

WHEEL SPEED SENSOR 2P CONNECTOR

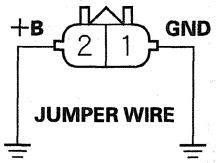

Terminal side of female terminals

(cont'd)

DTC Troubleshooting (cont'd)

17. Check for continuity between body ground and the appropriate wheel speed sensor +B and GND terminals of the VSA modulator-control unit 47P connector individually (see table).

DTC	Appropriate Terminal	
	+B	GND
11 (Right-front)	FR +B: No. 18	FR-GND: No. 17
13 (Left-front)	FL +B: No. 4	FL-GND: No. 20
15 (Right-rear)	RR +B: No. 5	RR-GND: No. 6
17 (Left-rear)	RL +B: No. 2	RL-GND: No. 3

VSA MODULATOR-CONTROL UNIT 47P CONNECTOR

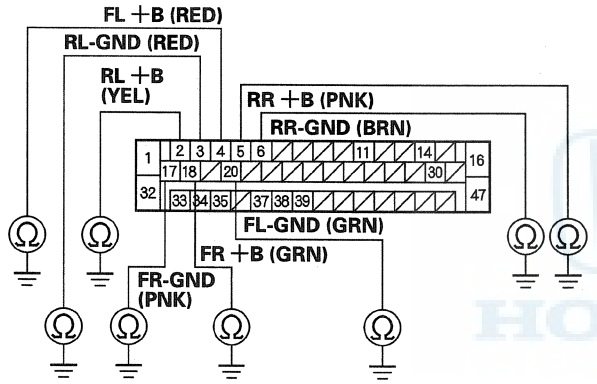

Wire side of female terminals

Is there continuity?

YES—Go to step 18.

NO—Repair an open in the wire between the VSA modulator-control unit and the wheel speed sensor. ■

18. Substitute the appropriate wheel speed sensor with the opposite side wheel speed sensor, or with a known-good wheel speed sensor (see page 19-109).

19. Reconnect all connectors.

20. Turn the ignition switch to ON (II).

21. Clear the DTC with the HDS.

22. Test-drive the vehicle at 19 mph (30 km/h) or more.

    NOTE: Drive the vehicle on the road, not on a lift.

23. Check for DTCs with the HDS.

    Is the same DTC indicated that is indicated in step 4?

    YES—Check for loose terminals or poor connections at the VSA modulator-control unit 47P connector. If connections are good, replace the VSA modulator-control unit (see page 19-105), and recheck. ■

    NO—Replace the original wheel speed sensor (see page 19-109). ■

DTC 12, 14, 16, 18: Wheel Speed Sensor (Electrical Noise/Intermittent Interruption)

NOTE: If the ABS and the VSA indicator comes on because of electrical noise, the indicator will go off when you test-drive the vehicle at 19 mph (30 km/h) after the system returns to normal.

1. Turn the ignition switch to ON (II).
2. Clear the DTC with the HDS.
3. Turn the ignition switch to LOCK (0), then turn it to ON (II) again.
4. Test-drive the vehicle around a number of corners.

   NOTE: Drive the vehicle on the road, not on a lift.
5. Check for DTCs with the HDS.

   Is DTC 12, 14, 16 or 18 indicated?

   YES—Go to step 6.

   NO—The system is OK at this time. Refer to intermittent failures (see page 19-47). ■
6. Turn the ignition switch to LOCK (0).
7. Check the appropriate wheel speed sensor and magnetic encoder for debris or damage (see page 19-108).

DTC	Appropriate Magnetic Encoder	Note
12	Right-front	Remove the front hub bearing unit (see page 18-12).
14	Left-front	
16	Right-rear	Remove the rear hub bearing unit (see page 18-27).
18	Left-rear	

   Is there debris or damage?

   YES—Clean or replace the wheel speed sensor or magnetic encoder. ■

   NO—Go to step 8.
8. Disconnect the VSA modulator-control unit 47P connector.

(cont'd)

DTC Troubleshooting (cont'd)

9. Check for continuity between the appropriate wheel speed sensor +B terminal and other wheel speed sensor +B terminals of the VSA modulator-control unit 47P connector (see table).

DTC	Appropriate Terminal	Other Terminals		
12	FR +B: No. 18	No. 4	No. 5	No. 2
14	FL +B: No. 4	No. 18	No. 5	No. 2
16	RR +B: No. 5	No. 18	No. 4	No. 2
18	RL +B: No. 2	No. 18	No. 4	No. 5

VSA MODULATOR-CONTROL UNIT 47P CONNECTOR

DTC 12:

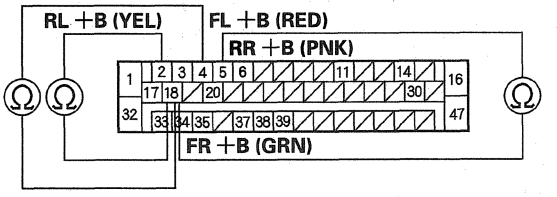

DTC 14:

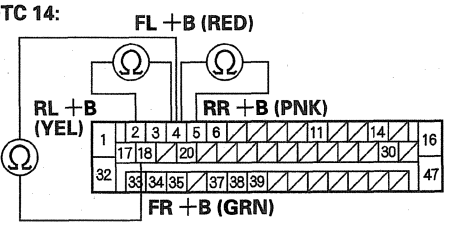

DTC 16:

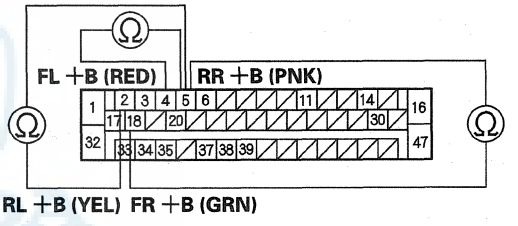

DTC 18:

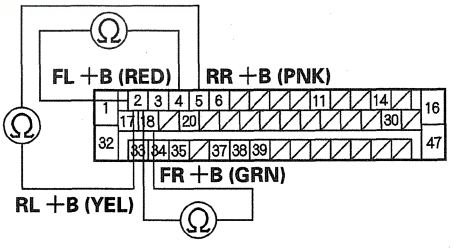

Wire side of female terminals

Is there continuity?

YES—Repair a short in the wire between the appropriate wheel speed sensor and the other wheel speed sensor. ■

NO—Go to step 10.

10. Substitute a known-good wheel speed sensor for the appropriate wheel speed sensor (see table).

DTC	Appropriate Wheel Speed Sensor
12	Right-front
14	Left-front
16	Right-rear
18	Left-rear

11. Turn the ignition switch to ON (II).
12. Clear the DTC with the HDS.
13. Turn the ignition switch to LOCK (0), then turn it to ON (II) again.
14. Test-drive the vehicle around a number of corners.

    NOTE: Drive the vehicle on the road, not on a lift.

15. Check for DTCs with the HDS.

    Is DTC 12, 14, 16 or 18 indicated?

    YES—Check for loose terminals or poor connections at the VSA modulator-control unit 47P connector. If connections are good, replace the VSA modulator-control unit (see page 19-105), and recheck. ■

    NO—Replace the original wheel speed sensor or encoder (see page 19-109). ■

DTC 21, 22, 23, 24: Magnetic Encoder (Wheel Bearing)

1. Turn the ignition switch to ON (II).
2. Clear the DTC with the HDS.
3. Test-drive the vehicle at 19 mph (30 km/h) or more.
4. Check for DTCs, with the HDS.

   Is DTC 21, 22, 23 or 24 indicated?

   YES—Go to step 5.

   NO—The system is OK at this time. Refer to intermittent failures (see page 19-47). ■

5. Inspect the appropriate magnetic encoder for damage, debris, and correct installation (see table).

DTC	Appropriate Encoder	Note
21	Right-front	Remove the front hub bearing unit (see page 18-12).
22	Left-front	
23	Right-rear	Remove the rear hub bearing unit (see page 18-27).
24	Left-rear	

   Is the magnetic encoder OK?

   YES—Check for loose terminals or poor connections at the VSA modulator-control unit 47P connector. If connections are good, replace the VSA modulator-control unit (see page 19-105), and recheck. ■

   NO—Remove the debris from the magnetic encoder, or replace the wheel bearing unit: ■

   - Front hub bearing unit (see page 18-12)
   - Rear hub bearing unit (see page 18-27)

DTC Troubleshooting (cont'd)

DTC 25: Yaw Rate Sensor

NOTE: If DTC 27 or 64 is stored at the same time as DTC 25, troubleshoot those DTCs first, then recheck for DTC 25.

1. Turn the ignition switch to ON (II).
2. Clear the DTC with the HDS.
3. Turn the ignition switch to LOCK (0), then turn it to ON (II) again.
4. Test-drive the vehicle around a number of corners.

   NOTE: Drive the vehicle on the road, not on a lift.
5. Check for DTCs with the HDS.

   Is DTC 25 indicated?

   YES—Go to step 6.

   NO—The system is OK at this time. Check for loose terminals or poor connections. ■
6. Turn the ignition switch to LOCK (0).
7. Disconnect the VSA modulator-control unit 47P connector and the yaw rate-lateral/longitudinal acceleration sensor 5P connector.
8. Turn the ignition switch to ON (II).
9. Measure the voltage between body ground and the VSA modulator-control unit 47P connector terminals No. 33, No. 34, and No. 35 individually.

VSA MODULATOR-CONTROL UNIT 47P CONNECTOR

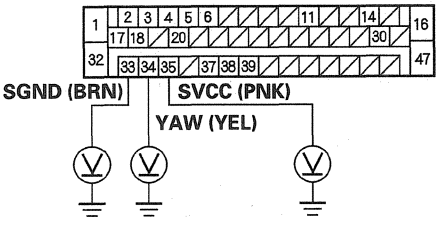

Wire side of female terminals

Is there 0.1 V or more?

YES—Repair a short to power in the wire between the VSA modulator-control unit and the yaw rate-lateral/longitudinal acceleration sensor. ■

NO—Go to step 10.

10. Turn the ignition switch to LOCK (0).
11. Check for continuity between body ground and the VSA modulator-control unit 47P connector terminals No. 33, No. 34, and No. 35 individually.

VSA MODULATOR-CONTROL UNIT 47P CONNECTOR

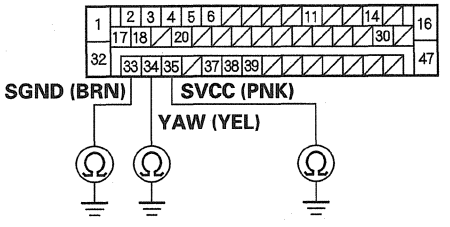

Wire side of female terminals

Is there continuity?

YES—Repair a short to body ground in the wire between the VSA modulator-control unit and the yaw rate-lateral/longitudinal acceleration sensor. ■

NO—Go to step 12.

12. Check for continuity between the VSA modulator-control unit 47P connector terminal No. 35 and the yaw rate-lateral/longitudinal acceleration sensor 5P connector terminal No. 2.

VSA MODULATOR-CONTROL UNIT 47P CONNECTOR
Wire side of female terminals

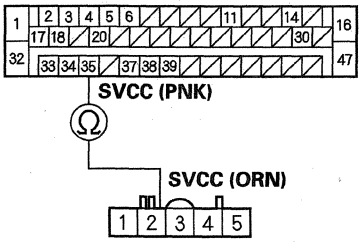

YAW RATE-LATERAL/LONGITUDINAL ACCELERATION SENSOR 5P CONNECTOR
Wire side of female terminals

Is there continuity?

YES—Go to step 13.

NO—Repair an open in the wire between the VSA modulator-control unit and the yaw rate-lateral/longitudinal acceleration sensor. ■

13. Check for continuity between the VSA modulator-control unit 47P connector terminal No. 33 and the yaw rate-lateral/longitudinal acceleration sensor 5P connector terminal No. 4.

VSA MODULATOR-CONTROL UNIT 47P CONNECTOR
Wire side of female terminals

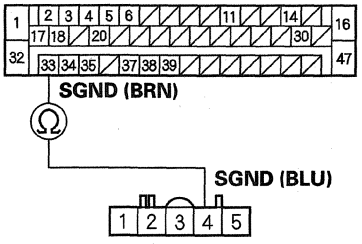

YAW RATE-LATERAL/LONGITUDINAL ACCELERATION SENSOR 5P CONNECTOR
Wire side of female terminals

Is there continuity?

YES—Go to step 14.

NO—Repair an open in the wire between the VSA modulator-control unit and the yaw rate-lateral/longitudinal acceleration sensor. ■

14. Check for continuity between the VSA modulator-control unit 47P connector terminal No. 34 and the yaw rate-lateral/longitudinal acceleration sensor 5P connector terminal No. 3.

VSA MODULATOR-CONTROL UNIT 47P CONNECTOR
Wire side of female terminals

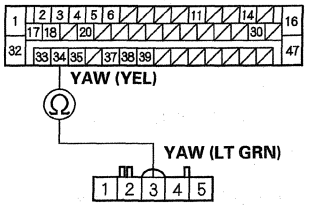

YAW RATE-LATERAL/LONGITUDINAL ACCELERATION SENSOR 5P CONNECTOR
Wire side of female terminals

Is there continuity?

YES—Go to step 15.

NO—Repair an open in the wire between the VSA modulator-control unit and the yaw rate-lateral/longitudinal acceleration sensor. ■

15. Substitute a known-good yaw rate-lateral/longitudinal acceleration sensor (see page 19-103).

16. Reconnect all of the disconnected connectors.

17. Turn the ignition switch to ON (II).

18. Clear the DTC with the HDS.

19. Turn the ignition switch to LOCK (0), then turn it to ON (II) again.

20. Test-drive the vehicle around a number of corners.

NOTE: Drive the vehicle on the road, not on a lift.

21. Check for DTCs with the HDS.

Is DTC 25 indicated?

YES—Check for loose terminals or poor connections at the VSA modulator-control unit 47P connector. If connections are good, replace the VSA modulator-control unit (see page 19-105), and recheck. ■

NO—Replace the original yaw rate-lateral/longitudinal acceleration sensor (see page 19-103). ■

DTC Troubleshooting (cont'd)

DTC 26: Lateral Acceleration Sensor

NOTE: If DTC 27 or 64 is stored at the same time as DTC 26, troubleshoot those DTCs first, then recheck for DTC 26.

1. Turn the ignition switch to ON (II).
2. Clear the DTC with the HDS.
3. Turn the ignition switch to LOCK (0), then turn it to ON (II) again.
4. Test-drive the vehicle around a number of corners.

   NOTE: Drive the vehicle on the road, not on a lift.
5. Check for DTCs with the HDS.

   Is DTC 26 indicated?

   YES—Go to step 6.

   NO—The system is OK at this time. Refer to intermittent failures (see page 19-47). ■
6. Turn the ignition switch to LOCK (0).
7. Disconnect the VSA modulator-control unit 47P connector and the yaw rate-lateral/longitudinal acceleration sensor 5P connector.
8. Turn the ignition switch to ON (II).
9. Measure the voltage between body ground and the VSA modulator-control unit 47P connector terminals No. 33, No. 35, and No. 37 individually.

VSA MODULATOR-CONTROL UNIT 47P CONNECTOR

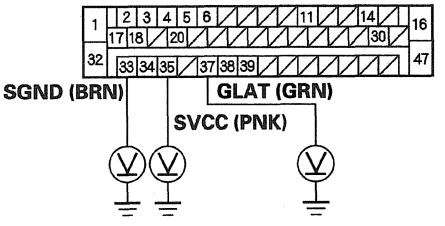

Wire side of female terminals

Is there 0.1 V or more?

YES—Repair a short to power in the wire between the VSA modulator-control unit and the yaw rate-lateral/longitudinal acceleration sensor. ■

NO—Go to step 10.

10. Turn the ignition switch to LOCK (0).
11. Check for continuity between body ground and the VSA modulator-control unit 47P connector terminals No. 33, No. 35, and No. 37 individually.

VSA MODULATOR-CONTROL UNIT 47P CONNECTOR

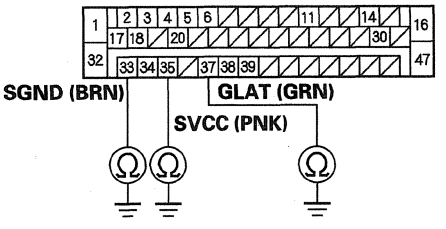

Wire side of female terminals

Is there continuity?

YES—Repair a short to body ground in the wire between the VSA modulator-control unit and the yaw rate-lateral/longitudinal acceleration sensor. ■

NO—Go to step 12.

12. Check for continuity between the VSA modulator-control unit 47P connector terminal No. 35 and the yaw rate-lateral/longitudinal acceleration sensor 5P connector terminal No. 2.

VSA MODULATOR-CONTROL UNIT 47P CONNECTOR
Wire side of female terminals

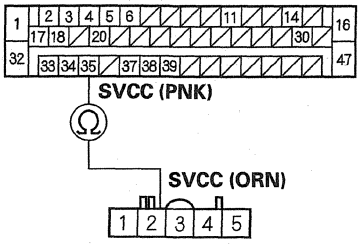

YAW RATE-LATERAL/LONGITUDINAL ACCELERATION SENSOR 5P CONNECTOR
Wire side of female terminals

Is there continuity?

YES—Go to step 13.

NO—Repair an open in the wire between the VSA modulator-control unit and the yaw rate-lateral/longitudinal acceleration sensor. ■

13. Check for continuity between the VSA modulator-control unit 47P connector terminal No. 33 and the yaw rate-lateral/longitudinal acceleration sensor 5P connector terminal No. 4.

VSA MODULATOR-CONTROL UNIT 47P CONNECTOR
Wire side of female terminals

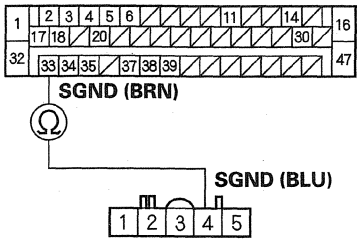

YAW RATE-LATERAL/LONGITUDINAL ACCELERATION SENSOR 5P CONNECTOR
Wire side of female terminals

Is there continuity?

YES—Go to step 14.

NO—Repair an open in the wire between the VSA modulator-control unit and the yaw rate-lateral/longitudinal acceleration sensor. ■

14. Check for continuity between the VSA modulator-control unit 47P connector terminal No. 37 and the yaw rate-lateral/longitudinal acceleration sensor 5P connector terminal No. 1.

VSA MODULATOR-CONTROL UNIT 47P CONNECTOR
Wire side of female terminals

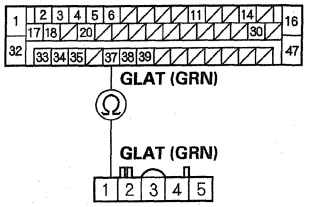

YAW RATE-LATERAL/LONGITUDINAL ACCELERATION SENSOR 5P CONNECTOR
Wire side of female terminals

Is there continuity?

YES—Go to step 15.

NO—Repair an open in the wire between the VSA modulator-control unit and the yaw rate-lateral/longitudinal acceleration sensor. ■

15. Substitute a known-good yaw rate-lateral/longitudinal acceleration sensor (see page 19-103).

16. Reconnect all of the disconnected connectors.

17. Turn the ignition switch to ON (II).

18. Clear the DTC with the HDS.

19. Turn the ignition switch to LOCK (0), then turn it to ON (II) again.

20. Test-drive the vehicle around a number of corners.

NOTE: Drive the vehicle on the road, not on a lift.

21. Check for DTCs with the HDS.

Is DTC 25 indicated?

YES—Check for loose terminals or poor connections at the VSA modulator-control unit 47P connector. If connections are good, replace the VSA modulator-control unit (see page 19-105), and recheck. ■

NO—Replace the original yaw rate-lateral/longitudinal acceleration sensor (see page 19-103). ■

DTC Troubleshooting (cont'd)

DTC 27: Steering Angle Sensor

1. Turn the ignition switch to ON (II).
2. Clear the DTC with the HDS.
3. Turn the ignition switch to LOCK (0), then turn it to ON (II) again.
4. Test-drive the vehicle around a number of corners.

   NOTE: Drive the vehicle on the road, not on a lift.
5. Check for DTCs with the HDS.

   Is DTC 27 indicated?

   YES—Go to step 6.

   NO—The system is OK at this time. Refer to intermittent failures (see page 19-47). ■
6. Turn the ignition switch to LOCK (0).
7. Disconnect the steering angle sensor 5P connector.
8. Turn the ignition switch to ON (II).
9. Measure the voltage between the steering angle sensor 5P connector terminal No. 5 and body ground.

STEERING ANGLE SENSOR 5P CONNECTOR

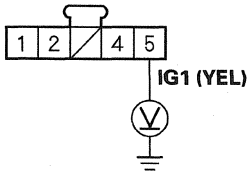

Wire side of female terminals

Is there battery voltage?

YES—Go to step 10.

NO—Repair an open in the wire between the No. 18 (15 A) fuse in the driver's under-dash fuse/relay box and the steering angle sensor. ■

10. Turn the ignition switch to LOCK (0).
11. Reconnect the steering angle 5P connector.
12. Measure the voltage between the steering angle sensor 5P connector terminal No. 1 and body ground.

STEERING ANGLE SENSOR 5P CONNECTOR

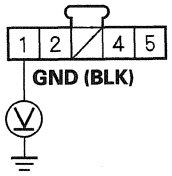

Wire side of female terminals

Is there 0.1 V or less?

YES—Replace the steering angle sensor (see page 19-102). ■

NO—Repair an open in the wire between the steering angle sensor and body ground (G506). If the wire is OK, check for a poor connection at body ground (G506). ■

DTC 28: Longitudinal Acceleration Sensor

NOTE: If DTC 27 or 64 is stored at the same time as DTC 28, troubleshoot those DTCs first, then recheck for DTC 28.

1. Turn the ignition switch to ON (II).
2. Clear the DTC with the HDS.
3. Turn the ignition switch to LOCK (0), then turn it to ON (II) again.
4. Test-drive the vehicle around a number of corners.

   NOTE: Drive the vehicle on the road, not on a lift.

5. Check for DTCs with the HDS.

   Is DTC 28 indicated?

   YES—Go to step 6.

   NO—The system is OK at this time. Refer to intermittent failures (see page 19-47). ■

6. Turn the ignition switch to LOCK (0).
7. Disconnect the VSA modulator-control unit 47P connector and the yaw rate-lateral/longitudinal acceleration sensor 5P connector.
8. Turn the ignition switch to ON (II).
9. Measure the voltage between body ground and the VSA modulator-control unit 47P connector terminals No. 33, No. 35, and No. 39 individually.

VSA MODULATOR-CONTROL UNIT 47P CONNECTOR

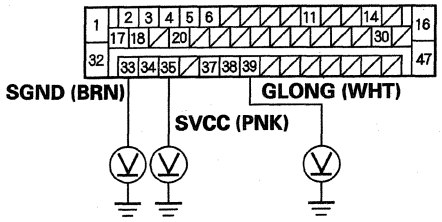

Wire side of female terminals

Is there 0.1 V or more?

YES—Repair a short to power in the wire between the VSA modulator-control unit and the yaw rate-lateral/longitudinal acceleration sensor. ■

NO—Go to step 10.

(cont'd)

DTC Troubleshooting (cont'd)

10. Turn the ignition switch to LOCK (0).

11. Check for continuity between body ground and the VSA modulator-control unit 47P connector terminals No. 33, No. 35, and No. 39 individually.

VSA MODULATOR-CONTROL UNIT 47P CONNECTOR

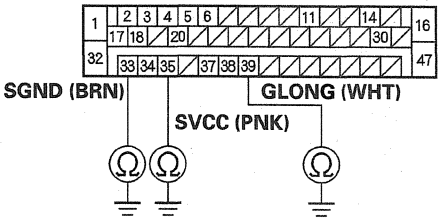

Wire side of female terminals

Is there continuity?

YES—Repair a short to body ground in the wire between the VSA modulator-control unit and the yaw rate-lateral/longitudinal acceleration sensor. ■

NO—Go to step 12.

12. Check for continuity between the VSA modulator-control unit 47P connector terminal No. 35 and yaw rate-lateral/longitudinal acceleration sensor 5P connector terminal No. 2.

VSA MODULATOR-CONTROL UNIT 47P CONNECTOR
Wire side of female terminals

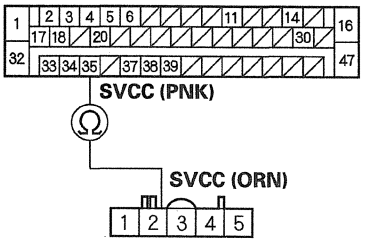

YAW RATE-LATERAL/LONGITUDINAL ACCELERATION SENSOR 5P CONNECTOR
Wire side of female terminals

Is there continuity?

YES—Go to step 13.

NO—Repair an open in the wire between the VSA modulator-control unit and the yaw rate-lateral/longitudinal acceleration sensor. ■

13. Check for continuity between the VSA modulator-control unit 47P connector terminal No. 33 and yaw rate-lateral/longitudinal acceleration sensor 5P connector terminal No. 4.

VSA MODULATOR-CONTROL UNIT 47P CONNECTOR
Wire side of female terminals

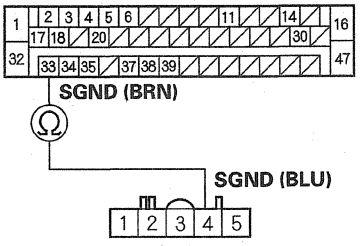

YAW RATE-LATERAL/LONGITUDINAL ACCELERATION SENSOR 5P CONNECTOR
Wire side of female terminals

Is there continuity?

YES—Go to step 14.

NO—Repair an open in the wire between the VSA modulator-control unit and the yaw rate-lateral/longitudinal acceleration sensor. ■

14. Check for continuity between the VSA modulator-control unit 47P connector terminal No. 39 and yaw rate-lateral/longitudinal acceleration sensor 5P connector terminal No. 5.

VSA MODULATOR-CONTROL UNIT 47P CONNECTOR
Wire side of female terminals

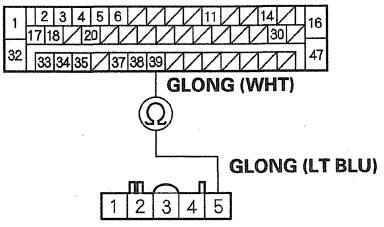

YAW RATE-LATERAL/LONGITUDINAL ACCELERATION SENSOR 5P CONNECTOR
Wire side of female terminals

Is there continuity?

YES—Go to step 15.

NO—Repair an open in the wire between the VSA modulator-control unit and the yaw rate-lateral/longitudinal acceleration sensor. ■

15. Check for continuity between body ground and the VSA modulator-control unit 47P connector terminals No. 32 and No. 47 individually.

VSA MODULATOR-CONTROL UNIT 47P CONNECTOR

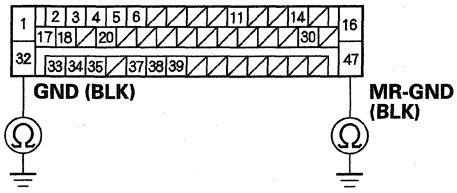

Wire side of female terminals

Is there continuity?

YES—Go to step 16.

NO—Repair open in the wire between the VSA modulator-control unit and body ground (G202). If the wire is OK, check for a poor connection at body ground (G202). ■

16. Substitute a known-good yaw rate-lateral/longitudinal acceleration sensor.

17. Clear the DTC with the HDS.

18. Turn the ignition switch to LOCK (0), then turn it to ON (II) again.

19. Test-drive the vehicle around a number of corners.

NOTE: Drive the vehicle on the road, not on a lift.

20. Check for DTCs with the HDS.

Is DTC 28 indicated?

YES—Check for loose terminals or poor connections at the VSA modulator-control unit 47P connector. If connections are good, replace the VSA modulator-control unit (see page 19-105), and recheck. ■

NO—Replace the yaw rate-lateral/longitudinal acceleration sensor (see page 19-103). ■

DTC 31, 32, 33, 34, 35, 36, 37, 38: ABS Solenoid

1. Turn the ignition switch to ON (II).

2. Clear the DTC with the HDS.

3. Check for DTCs with the HDS.

Does the ABS indicator come on, and are DTCs 31, 32, 33, 34, 35, 36, 37, and/or 38 indicated?

YES—Check for loose terminals or poor connections at the VSA modulator-control unit 47P connector. If connections are good, replace the VSA modulator-control unit (see page 19-105), and recheck. ■

NO—The system is OK at this time. Refer to intermittent failures (see page 19-47). ■

DTC Troubleshooting (cont'd)

DTC 41, 42, 43, 44: Wheel Lock

1. Turn the ignition switch to ON (II).
2. Clear the DTC with the HDS.
3. Turn the ignition switch to LOCK (0).
4. Check for brake drag; test-drive the vehicle using the brakes often, raise the vehicle on a lift, rotate each tire by hand.

   Do the brakes drag?

   YES—Repair the brake drag. ■

   NO—Go to step 5.

5. Check the installation of the appropriate wheel speed sensor and magnetic encoder for damage, debris, or excessive air gap (see page 19-108).

DTC	Appropriate Magnetic Encoder	Note
41	Right-front	Remove the driveshaft outboard joint from the appropriate wheel hub (see page 16-4).
42	Left-front	
43	Right-rear	Remove the hub bearing unit (see page 18-27).
44	Left-rear	

Is it correct?

YES—If the DTC does not reappear, the most probable cause for the DTC is that the vehicle might have lost traction in poor weather and spun around. ■

NO—Reinstall or replace the wheel speed sensor (see page 19-109) or wheel bearing unit: ■

- Front hub bearing unit (see page 18-12).
- Rear hub bearing unit (see page 18-27).

DTC 51: Motor Lock

DTC 52: Motor Stuck OFF

1. Turn the ignition switch to ON (II).
2. Clear the DTC with the HDS.
3. Turn the ignition switch to LOCK (0), then turn it to ON (II) again.
4. Test-drive the vehicle around a number of corners.

   NOTE: Drive the vehicle on the road, not on a lift.

5. Check for DTCs with the HDS.

   Is DTC 51 or 52 indication?

   YES—Go to step 6.

   NO—The system is OK at this time. Refer to intermittent failures (see page 19-47). ■

6. Turn the ignition switch to LOCK (0).
7. Check the No. 17 (30 A) fuse in the under-hood fuse/relay box.

   Is the fuse OK?

   YES—Reinstall the fuse, and go to step 8.

   NO—Replace the fuse, and recheck. If the No. 17 (30 A) fuse blows again, repair short to ground in the wire between the No. 17 (30 A) fuse in the under-hood fuse/relay box and the VSA modulator-control unit, then replace the fuse and recheck. ■

8. Disconnect the VSA modulator-control unit 47P connector.

9. Measure the voltage between the VSA modulator-control unit 47P connector terminal No. 16 and body ground.

VSA MODULATOR-CONTROL UNIT 47P CONNECTOR

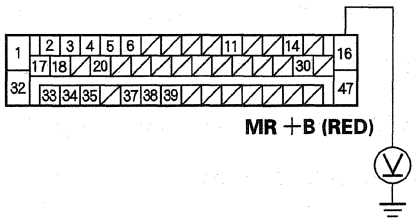

Wire side of female terminals

Is there battery voltage?

YES—Go to step 10.

NO—Repair an open in the wire between the No. 17 (30 A) fuse and the VSA modulator-control unit. ■

10. Check for continuity between the VSA modulator-control unit 47P connector terminal No. 47 and body ground.

VSA MODULATOR-CONTROL UNIT 47P CONNECTOR

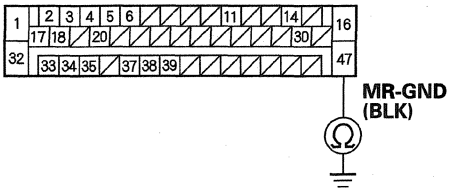

Wire side of female terminals

Is there continuity?

YES—Go to step 11.

NO—Repair an open in the wire between the VSA modulator-control unit and body ground (G202). If the wire is OK, check for a poor connection at body ground (G202). ■

(cont'd)

DTC Troubleshooting (cont'd)

11. Reconnect the VSA modulator-control unit 47P connector.
12. Turn the ignition switch to ON (II).
13. Clear the DTC with the HDS.
14. Turn the ignition switch to LOCK (0), then turn it to ON (II) again.
15. Test-drive the vehicle at 19 mph (30 km/h) or more.
16. Check for DTCs with the HDS.

    Is DTC 51 or 52 indicated?

    YES—Check for loose terminals or poor connections at the VSA modulator-control unit 47P connector. If connections are good, replace the VSA modulator-control unit (see page 19-105), and recheck. ■

    NO—The system is OK at this time. Refer to intermittent failures (see page 19-47). ■

DTC 53: Motor Stuck ON

1. Turn the ignition switch to ON (II).
2. Clear the DTC with the HDS.
3. Turn the ignition switch to LOCK (0), then turn it to ON (II) again.
4. Test-drive the vehicle around a number of corners.

   NOTE: Drive the vehicle on the road, not on a lift.

5. Check for DTCs with the HDS.

   Is DTC 53 indicated?

   YES—Go to step 6.

   NO—The system is OK at this time. Refer to intermittent failures (see page 19-47). ■

6. Turn the ignition switch to LOCK (0).
7. Disconnect the VSA modulator-control unit 47P connector.
8. Check for continuity between the VSA modulator-control unit 47P connector terminal No. 47 and body ground.

VSA MODULATOR-CONTROL UNIT 47P CONNECTOR

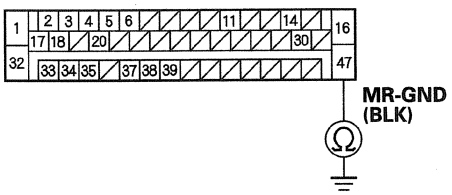

Wire side of female terminals

Is there continuity?

YES—Go to step 9.

NO—Repair an open in the wire between the VSA modulator-control unit and body ground (G202). If the wire is OK, check for a poor connection at body ground (G202). ■

9. Reconnect the VSA modulator-control unit 47P connector.
10. Turn the ignition switch to ON (II).
11. Clear the DTC with the HDS.
12. Turn the ignition switch to LOCK (0), then turn it to ON (II) again.
13. Test-drive the vehicle at 19 mph (30 km/h) or more.

    NOTE: Drive the vehicle on the road, not on a lift.
14. Check for DTCs with the HDS.

    Is DTC 53 indicated?

    YES—Check for loose terminals or poor connections at the VSA modulator-control unit 47P connector. If connections are good, replace the VSA modulator-control unit (see page 19-105), and recheck. ■

    NO—The system is OK at this time. Refer to intermittent failures (see page 19-47). ■

DTC 54: Fail-safe Relay

1. Turn the ignition switch to ON (II).
2. Clear the DTC with the HDS.
3. Turn the ignition switch to LOCK (0), then turn it to ON (II) again.
4. Test-drive the vehicle around a number of corners.

   NOTE: Drive the vehicle on the road, not on a lift.
5. Check for DTCs with the HDS.

   Is DTC 54 indicated?

   YES—Go to step 6.

   NO—The system is OK at this time. Refer to intermittent failures (see page 19-47). ■
6. Turn the ignition switch to LOCK (0).
7. Disconnect the VSA modulator-control unit 47P connector.
8. Check for continuity between the VSA modulator-control unit 47P connector terminal No. 47 and body ground.

VSA MODULATOR-CONTROL UNIT 47P CONNECTOR

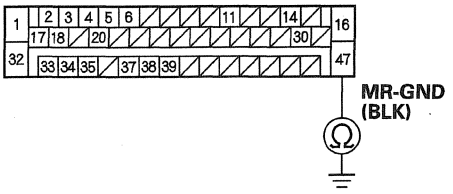

Wire side of female terminals

Is there continuity?

YES—Go to step 9.

NO—Repair an open in the wire between the VSA modulator-control unit and body ground (G202). If the wire is OK, check for a poor connection at body ground (G202). ■

(cont'd)

DTC Troubleshooting (cont'd)

9. Reconnect the VSA modulator-control unit 47P connector.
10. Turn the ignition switch to ON (II).
11. Clear the DTC with the HDS.
12. Turn the ignition switch to LOCK (0), then turn it to ON (II) again.
13. Test-drive the vehicle at 19 mph (30 km/h) or more.

    NOTE: Drive the vehicle on the road, not on a lift.
14. Check for DTCs with the HDS.

    Is DTC 54 indicated?

    YES—Check for loose terminals or poor connections at the VSA modulator-control unit 47P connector. If connections are good, replace the VSA modulator-control unit (see page 19-105), and recheck.■

    NO—The system is OK at this time. Refer to intermittent failures (see page 19-47).■

DTC 61, 62: Low/High Voltage

1. Turn the ignition switch to ON (II).
2. Clear the DTC with the HDS.
3. Turn the ignition switch to LOCK (0), then turn it to ON (II) again.
4. Test-drive the vehicle around a number of corners.

   NOTE: Drive the vehicle on the road, not on a lift.

   Does the ABS indicator come on?

   YES—Go to step 5.

   NO—The system is OK at this time. Refer to intermittent failures (see page 19-47).■
5. Check for DTCs with the HDS.

   Is DTC 61 or 62 indicated?

   YES—Check the battery (see page 22-91) and the charging system (see page 4-30).■

   NO—Do the appropriate troubleshooting for the DTC indicated.■

DTC 64: Sensor Power Voltage

1. Turn the ignition switch to ON (II).
2. Clear the DTC with the HDS.
3. Turn the ignition switch to LOCK (0), then turn it to ON (II) again.
4. Test-drive the vehicle around a number of corners.

   NOTE: Drive the vehicle on the road, not on a lift.
5. Check for DTCs with the HDS.

   Is DTC 64 indicated?

   YES—Go to step 6.

   NO—The system is OK at this time. Refer to intermittent failures (see page 19-47). ■
6. Turn the ignition switch to LOCK (0).
7. Disconnect the VSA modulator-control unit 47P connector and the yaw rate-lateral/longitudinal acceleration sensor 5P connector.
8. Turn the ignition switch to ON (II).
9. Measure the voltage between the VSA modulator-control unit 47P connector terminal No. 35 and body ground.

VSA MODULATOR-CONTROL UNIT 47P CONNECTOR

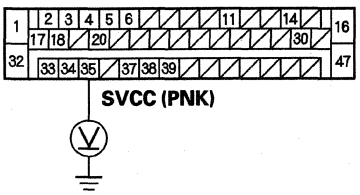

Wire side of female terminals

Is there 0.1 V or more?

YES—Repair a short to power in the wire between the VSA modulator-control unit and the yaw rate-lateral/longitudinal acceleration sensor. ■

NO—Go to step 10.

10. Turn the ignition switch to LOCK (0).
11. Check for continuity between the VSA modulator-control unit 47P connector terminal No. 35 and body ground.

VSA MODULATOR-CONTROL UNIT 47P CONNECTOR

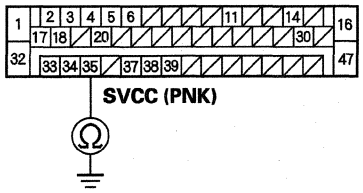

Wire side of female terminals

Is there continuity?

YES—Repair a short to body ground in the wire between the VSA modulator-control unit and the yaw rate-lateral/longitudinal acceleration sensor. ■

NO—Go to step 12.

12. Turn the ignition switch to ON (II).
13. Clear the DTC with the HDS.
14. Turn the ignition switch to LOCK (0), then turn it to ON (II) again.
15. Test-drive the vehicle at 19 mph (30 km/h) or more.

    NOTE: Drive the vehicle on the road, not on a lift.
16. Check for DTCs with the HDS.

    Is DTC 64 indicated?

    YES—Check for loose terminals or poor connections at the VSA modulator-control unit 47P connector. If connections are good, replace the VSA modulator-control unit (see page 19-105), and recheck. ■

    NO—The system is OK at this time. Refer to intermittent failures (see page 19-47) and check connections at the VSA modulator-control unit 47P connector and body ground (G202). ■

DTC Troubleshooting (cont'd)

DTC 65: Brake Fluid Level

1. Check the brake fluid level in the master cylinder reservoir.

   Is the brake fluid level OK?

   YES—Go to step 2.

   NO—Inspect the brake system for fluid leaks. If no leaks are found, check for worn brake pads. ■

2. Disconnect gauge control module connector B (28P) and the brake fluid level switch 2P connector.

3. Check for continuity between gauge control module connector B (28P) terminal No. 13 and body ground.

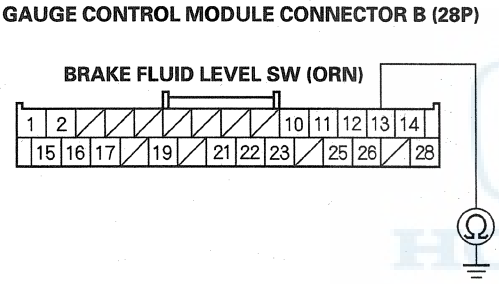

Wire side of female terminals

   Is there continuity?

   YES—Repair a short to body ground in the wire between gauge control module connector B and the brake fluid level switch. ■

   NO—Go to step 4.

4. Check the brake fluid level switch (see page 19-11).

   Is the switch OK?

   YES—Do the troubleshooting for the gauge control module (see page 22-396). ■

   NO—Replace the reservoir (brake fluid level switch located) on the master cylinder (see page 19-19). ■

DTC 66: VSA Pressure Sensor (Inside of VSA Modulator-Control Unit)

1. Turn the ignition switch to ON (II).

2. Clear the DTC with the HDS.

3. Turn the ignition switch to LOCK (0), then turn it to ON (II) again.

4. Check for DTC s with the HDS.

   Is DTC 64 indicated?

   YES—Do the troubleshooting for DTC 64 (see page 19-85). ■

   NO—Go to step 5.

5. Check the BRAKE PRESS in the VSA DATA LIST with the HDS without pressing the brake pedal.

   Is there over 0.8 MP a or more?

   YES—Go to step 6.

   NO—Replace the VSA modulator-control unit (see page 19-105). ■

6. Press the brake pedal until BRAKE SWITCH in the VSA DATA LIST is turned ON with the HDS.
7. Check the BRAKE PRESS in the VSA DATA LIST with the HDS.

   Is there 0 MPa?

   YES—Go to step 8.

   NO—Check the brake pedal position switch. If necessary, replace the switch (see page 19-6). ■
8. Do the VSA sensor neutral position memorization (see page 19-104).
9. Start the engine and press the brake pedal until BRAKE PRESS in the VSA DATA LIST is 15 MPa with the HDS.
10. Check for DTCs with the HDS.

    Is DTC 66 indicated?

    YES—Check for loose terminals or poor connections at the VSA modulator-control unit 47P connector. If connections are good, replace the VSA modulator-control unit (see page 19-105), and recheck. ■

    NO—The system is OK at this time. Refer to intermittent failures (see page 19-47). ■

DTC 68: Brake Pedal Position Switch

1. Check for other DTCs in the PGM-FI system.

   Are other DTCs indicated?

   YES—Do the appropriate troubleshooting for the DTCs. ■

   NO—Go to step 2.
2. Check the brake pedal position switch (see page 19-6).

   Is the switch OK?

   YES—Go to step 3.

   NO—Adjust or replace the brake pedal position switch (see page 19-6). ■
3. Turn the ignition switch to ON (II).
4. Clear the DTC with the HDS.
5. Turn the ignition switch to LOCK (0), then turn it to ON (II) again.
6. Test-drive the vehicle at 19 mph (30 km/h) or more.

   NOTE: Drive the vehicle on the road, not on a lift.
7. Check for DTCs with the HDS.

   Is DTC 68 indicated?

   YES—Go to step 8.

   NO—The system is OK at this time. Refer to intermittent failures (see page 19-47). ■
8. Troubleshoot the brake pedal position switch circuit (see page 11-311).

   Is the brake pedal position switch circuit OK?

   YES—Substitute a known-good PCM and recheck: ■

   - If the problem is gone, replace the original PCM.
   - If the problem continues, replace the VSA modulator-control unit (see page 19-105).

   NO—Repair the brake pedal position switch circuit. ■

DTC Troubleshooting (cont'd)

DTC 71: Different Diameter Tire

1. Turn the ignition switch to ON (II).
2. Clear the DTC with the HDS.
3. Turn the ignition switch to LOCK (0), then turn it to ON (II) again.
4. Test-drive the vehicle at 19 mph (30 km/h) or more.

   NOTE: Drive the vehicle on the road, not on a lift.
5. Check for DTCs with the HDS.

   Is DTC 71 indicated?

   YES—Go to step 6.

   NO—Confirm that tire inflation is set to spec. The vehicle is OK at this time. Refer to intermittent failures (see page 19-47). ■
6. Check that all four tires are the specified size and are inflated to the proper specification.

   Are all four tires the correct size and properly inflated?

   YES—Go to step 7.

   NO—Install the correct tires or set the tires to the correct inflation, and retest. ■
7. With the vehicle on level ground, mark each tire with a small spot of grease. Roll the vehicle until each of the tires makes two grease spots on the floor.
8. Measure and record the distance between the two grease spots.

   Is the difference between the shortest and the longest measurement more than 10 %?

   YES—Replace the tire/tires that is smaller or larger than the others. ■

   NO—Check for loose terminals or poor connections at the VSA modulator-control unit 47P connector. If connections are good, replace the VSA modulator-control unit (see page 19-105). ■

DTC 81: Central Processing Unit (CPU)

1. Turn the ignition switch to ON (II).
2. Check for other system DTCs with the HDS.

   Is another system DTC indicated?

   YES—Do the appropriate troubleshooting for the DTC. ■

   NO—Go to step 3.
3. Clear the DTC with the HDS.
4. Turn the ignition switch to LOCK (0), then turn it to ON (II) again.
5. Test-drive the vehicle at 19 mph (30 km/h) or more.

   NOTE: Drive the vehicle on the road, not on a lift.
6. Check for DTCs with the HDS.

   Is DTC 81 indicated?

   YES—Go to step 7.

   NO—The vehicle is OK at this time. Refer to intermittent failures (see page 19-47). ■
7. Turn the ignition switch to LOCK (0).
8. Disconnect the VSA modulator-control unit 47P connector and the yaw rate-lateral/longitudinal acceleration sensor 5P connector.
9. Turn the ignition switch to ON (II).

10. Measure the voltage between the VSA modulator-control unit 47P connector terminal No. 35 and body ground.

VSA MODULATOR-CONTROL UNIT 47P CONNECTOR

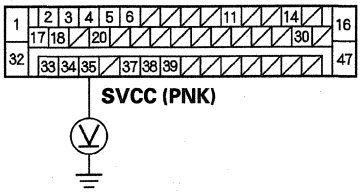

Wire side of female terminals

Is there 0.1 V or more?

YES—Repair a short to power in the wire between the VSA modulator-control unit and the yaw rate-lateral/longitudinal acceleration sensor. ■

NO—Go to step 11.

11. Turn the ignition switch to LOCK (0).

12. Check for continuity between the VSA modulator-control unit 47P connector terminal No. 35 and body ground.

VSA MODULATOR-CONTROL UNIT 47P CONNECTOR

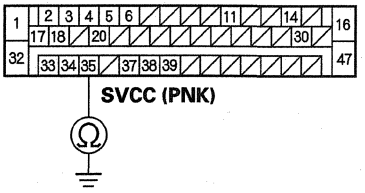

Wire side of female terminals

Is there continuity?

YES—Repair a short to body ground in the wire between the VSA modulator-control unit and the yaw rate-lateral/longitudinal acceleration sensor. ■

NO—Check for loose terminals or poor connections at the VSA modulator-control unit 47P connector. If connections are good, replace the VSA modulator-control unit (see page 19-105), and recheck. ■

DTC Troubleshooting (cont'd)

DTC 83: PCM

1. Turn the ignition switch to ON (II).
2. Check for DTCs with the HDS.

   Is DTC 86 indicated?

   YES—Do the troubleshooting for DTC 86 (see page 19-91).■

   NO—Go to step 3.
3. Clear the DTC with the HDS.
4. Turn the ignition switch to LOCK (0), then turn it to ON (II) again.
5. Test-drive the vehicle at 19 mph (30 km/h) or more.

   NOTE: Drive the vehicle on the road, not on a lift.
6. Check for DTCs with the HDS.

   Is DTC 83 indicated?

   YES—Go to step 7.

   NO—The system is OK at this time. Refer to intermittent failures (see page 19-47).■
7. Check for fuel and emissions systems DTCs with the HDS.

   Are any PCM DTCs indicated?

   YES—Do the applicable troubleshooting for the PGM-FI system DTC.■

   NO—Go to step 8.
8. Check the gear position indicator.

   Does the D indicator come on while neutral position (N) is selected or is a PCM DTC indicated?

   YES—Do the applicable troubleshooting for the A/T system.■

   NO—Check for loose terminals at the PCM connectors, and go to step 9.
9. Clear the DTC with the HDS.
10. Turn the ignition switch to LOCK (0), then turn it to ON (II) again.
11. Test-drive the vehicle at 19 mph (30 km/h) or more.

    NOTE: Drive the vehicle on the road, not on a lift.
12. Check for DTCs with the HDS.

    Is DTC 83 indicated and no PCM's DTC?

    YES—Substitute a known-good PCM, and recheck. If the code returns, check for loose terminals or poor connections at the VSA modulator-control unit 47P connector. If connections are good, replace the VSA modulator-control unit (see page 19-105), and recheck.■

    NO—The system is OK at this time. Refer to intermittent failures (see page 19-47).■

DTC 84: VSA Sensor Neutral Position

1. Turn the ignition switch to ON (II).
2. Clear the DTC with the HDS.
3. Do the VSA sensor neutral position memorization (see page 19-104).
4. Test-drive the vehicle at 19 mph (30 km/h) or more.

   NOTE: Drive the vehicle on the road, not on a lift.
5. Check for DTCs with the HDS.

   Is DTC 84 indicated?

   YES—Substitute a known-good VSA modulator-control unit then retest. If the VSA modulator-control unit was substituted, go to step 1.

   NO—The system is OK at this time. Refer to intermittent failures (see page 19-47). Check for loose terminals or poor connections. ■

DTC 86: F-CAN Communication

1. Turn the ignition switch to ON (II).
2. Clear the DTC with the HDS.
3. Turn the ignition switch to LOCK (0), then turn it to ON (II) again.
4. Check for fuel and emissions systems DTCs with the HDS.

   Is another system DTCs indicated?

   YES—Do the applicable troubleshooting for the PCM. ■

   NO—Go to step 5.
5. Measure the voltage between the steering angle sensor 5P connector terminal No. 5 and body ground.

STEERING ANGLE SENSOR 5P CONNECTOR

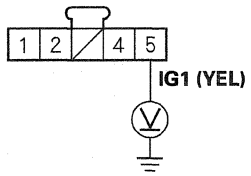

Wire side of female terminals

Is there battery voltage?

YES—Go to step 6.

NO—Repair an open in the wire between the No. 18 (15 A) fuse in the driver's under-dash fuse/relay box and the steering angle sensor. ■

(cont'd)

DTC Troubleshooting (cont'd)

6. Measure the voltage between the steering angle sensor 5P connector terminal No. 1 and body ground.

STEERING ANGLE SENSOR 5P CONNECTOR

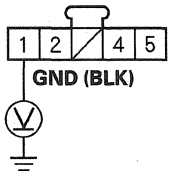

Wire side of female terminals

Is there 0.2 V or less?

YES—Go to step 7.

NO—Repair an open in the wire between the steering angle sensor and body ground (G506). If the wire is OK, check for a poor connection at body ground (G506). ■

7. Disconnect the VSA modulator-control unit 47P connector and the steering angle sensor 5P connector.

8. Check for continuity between the VSA modulator-control unit 47P connector terminals No. 14 and No. 30, and the steering angle sensor 5P connector terminals No. 2 and No. 4 individually.

STEERING ANGLE SENSOR 5P CONNECTOR
Wire side of female terminals

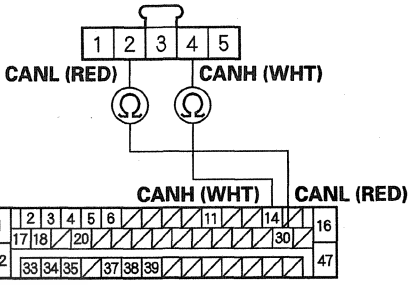

VSA MODULATOR-CONTROL UNIT 47P CONNECTOR
Wire side of female terminals

Is there continuity?

YES—Replace the steering angle sensor (see page 19-102). ■

NO—Repair an open in the wire between the steering angle sensor and VSA modulator-control unit. ■

DTC 107: TCS Operation

DTC 108: VSA Operation

NOTE: When DTC 107 or 108 is stored, VSA activation indicator will come on and ABS/VSA indicator will not come on.

1. Turn the ignition switch to ON (II).
2. Clear the DTC with the HDS.
3. Turn the ignition switch to LOCK (0), then turn it to ON (II) again.
4. Test-drive the vehicle at 19 mph (30 km/h) or more.

   NOTE: Drive the vehicle on the road, not on a lift.
5. Check for DTCs with the HDS.

   Is DTC 107 or 108 indicated ?

   YES—Check for loose terminals or poor connections at the VSA modulator-control unit 47P connector. If connections are good, replace the VSA modulator-control unit (see page 19-105), and recheck.■

   NO—The system is OK at this time. Refer to intermittent failures (see page 19-47).■

DTC 112: Internal Power Source Stuck OFF

NOTE: If the battery cable was disconnected three times with the ignition switch ON (II), this DTC may be stored.

1. Turn the ignition switch to ON (II).
2. Check for other system DTCs with the HDS.

   Is another system DTC indicated?

   YES—Do the appropriate troubleshooting for the DTC.■

   NO—Go to step 3.
3. Clear the DTC with the HDS.
4. Turn the ignition switch to LOCK (0), then turn it to ON (II) again.
5. Test-drive the vehicle at 19 mph (30 km/h) or more.

   NOTE: Drive the vehicle on the road, not on a lift.
6. Check for DTCs with the HDS.

   Is DTC 112 indicated?

   YES—Go to step 7.

   NO—The vehicle is OK at this time. Refer to intermittent failures (see page 19-47).■

(cont'd)

DTC Troubleshooting (cont'd)

7. Turn the ignition switch to LOCK (0).
8. Inspect G202 for a clean and tight connection.

   Is G202 clean and properly connected?

   YES—Go to step 9.

   NO—Repair the connection at G202. ■
9. Disconnect the VSA modulator-control unit 47P connector.
10. Check for continuity between body ground and VSA modulator-control unit 47P connector terminals No. 32 and No. 47 individually.

VSA MODULATOR-CONTROL UNIT 47P CONNECTOR

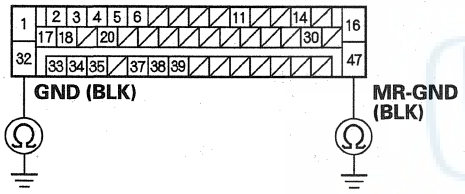

Wire side of female terminals

Is there continuity?

YES—Check for loose terminals or poor connections at the VSA modulator-control unit 47P connector. If connections are good, replace the VSA modulator-control unit (see page 19-105), and recheck. ■

NO—Repair the open or high resistance between the VSA modulator-control unit and the body ground (G202). ■

DTC 121, 122, 123, 124: VSA Solenoid

1. Turn the ignition switch to ON (II).
2. Clear the DTC with the HDS.
3. Turn the ignition switch to LOCK (0), then turn it to ON (II) again.
4. Test-drive the vehicle at 19 mph (30 km/h) or more.

   NOTE: Drive the vehicle on the road, not on a lift.
5. Check for DTCs with the HDS.

   Is DTC 121, 122, 123 or 124 indicated?

   YES—Check for loose terminals or poor connections at the VSA modulator-control unit 47P connector. If connections are good, replace the VSA modulator-control unit (see page 19-105), and recheck. ■

   NO—The system is OK at this time. Refer to intermittent failures (see page 19-47). ■

Symptom Troubleshooting

ABS indicator does not come on

1. Turn the ignition switch to ON (II), and watch the ABS indicator.

   Does the ABS indicator come on for several seconds?

   YES—The system is OK at this time. Refer to intermittent failures (see page 19-47). ■

   NO—Go to step 2.

2. Apply the parking brake.

   Does the brake system indicator come on?

   YES—Go to step 3.

   NO—Repair an open in the gauge control module indicator power source circuit. ■

3. Turn the ignition switch to LOCK (0).

4. Disconnect the VSA modulator-control unit 47P connector.

5. Turn the ignition switch to ON (II).

   Does the VSA indicator come on?

   YES—Go to step 6.

   NO—Do the troubleshooting for the gauge control module (see page 22-396). ■

6. Turn the ignition switch to LOCK (0).

7. Substitute a known-good VSA modulator-control unit (see page 19-105).

8. Turn the ignition switch to ON (II).

   Does ABS indicator come on?

   YES—Replace the VSA modulator-control unit (see page 19-105). ■

   NO—Do the troubleshooting for the gauge control module (see page 22-396). ■

ABS indicator does not go off, and no DTCs are stored

1. Check the No. 18 (40 A) fuse in the under-hood fuse/relay box.

   Is the fuse OK?

   YES—Reinstall the fuse, and go to step 2.

   NO—Replace the fuse, and recheck. If the fuse is blown, check for a short to body ground in this fuse circuit. If the circuit is OK, replace the VSA modulator-control unit (see page 19-105). ■

2. Check the No. 18 (15 A) fuse in the driver's under-dash fuse/relay box.

   Is the fuse OK?

   YES—Reinstall the fuse, and go to step 3.

   NO—Replace the fuse, and recheck. If the fuse is blown, check for a short to body ground in this fuse circuit. If the circuit is OK, replace the VSA modulator-control unit (see page 19-105). ■

3. Disconnect the VSA modulator-control unit 47P connector.

4. Measure the voltage between the VSA modulator-control unit 47P connector terminal No. 1 and body ground.

VSA MODULATOR-CONTROL UNIT 47P CONNECTOR

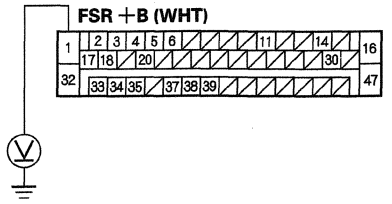

Wire side of female terminals

Is there battery voltage?

YES—Go to step 5.

NO—Repair an open in the wire between the No. 18 (40 A) fuse in the under-hood fuse/relay box and the VSA modulator-control unit. ■

(cont'd)

Symptom Troubleshooting (cont'd)

5. Turn the ignition switch to ON (II).

6. Measure the voltage between the VSA modulator-control unit 47P connector terminal No. 38 and body ground.

VSA MODULATOR-CONTROL UNIT 47P CONNECTOR

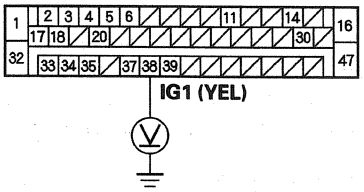

Wire side of female terminals

Is there battery voltage?

YES—Go to step 7.

NO—Repair an open in the wire between the No. 18 (15 A) fuse in the driver's under-dash fuse/relay box and the VSA modulator-control unit. ■

7. Turn the ignition switch to LOCK (0).

8. Check for continuity between the VSA modulator-control unit 47P connector terminal No. 32 and body ground.

VSA MODULATOR-CONTROL UNIT 47P CONNECTOR

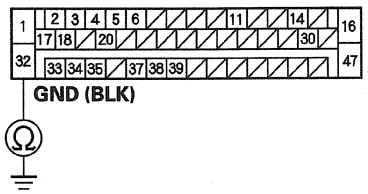

Wire side of female terminals

Is there continuity?

YES—Check for loose terminals or poor connections at the VSA modulator-control unit 47P connector. Substitute a known-good gauge control module, and recheck. If the test results are the same, substitute a known-good VSA modulator-control unit (see page 19-105), and recheck. ■

NO—Repair an open in the wire between the VSA modulator-control unit and body ground (G202). If the wire is OK, check for a poor connection at body ground (G202). ■

Brake system indicator does not come on (check bulb operation with parking brake)

1. With the parking brake applied, turn the ignition switch to ON (II), and watch the brake system indicator.

   Does the brake system indicator come on?

   YES—The brake system indicator is OK at this time. ■

   NO—Go to step 2.

2. Turn the ignition switch to LOCK (0), then turn it to ON (II) again.

   Does the ABS indicator come on for several seconds?

   YES—Go to step 3.

   NO—Repair an open in the indicator power source circuit. If necessary, substitute a known-good gauge control module, and recheck. ■

3. Turn the ignition switch to LOCK (0).

4. Release the parking brake.

5. Turn the ignition switch to ON (II).

   Does the brake system indicator come on for several seconds?

   YES—Go to step 6.

   NO—Check for loose terminals or poor connections at the gauge control module connectors. If connections are good, replace the gauge control module (see page 22-419), and recheck. ■

6. Apply the parking brake.

   Does the brake system indicator come on?

   YES—The system is OK at this time. Refer to intermittent failures (see page 19-47). ■

   NO—Go to step 7.

7. Turn the ignition switch to LOCK (0).

8. Disconnect the parking brake switch connector (see page 19-11).

9. Turn the ignition switch to ON (II).

10. Measure the voltage between the parking brake switch connector terminal and body ground.

    Is there battery voltage?

    YES—Replace the parking brake switch (see page 19-11). ■

    NO—Go to step 11.

11. Turn the ignition switch to LOCK (0).

12. Remove the gauge control module (see page 22-419). Leave the gauge control module connectors connected.

13. Connect gauge control module connector B (28P) terminal No. 14 to body ground with a jumper wire.

GAUGE CONTROL MODULE CONNECTOR B (28P)

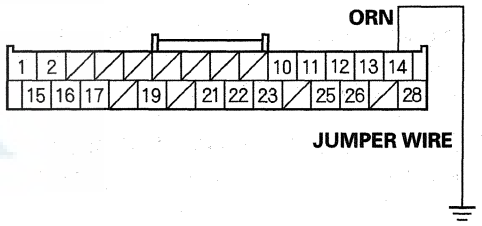

Wire side of female terminals

14. Turn the ignition switch to ON (II).

    Does the brake system indicator come on and stay on?

    YES—Repair an open in the wire between the gauge control module and the parking brake switch. ■

    NO—Replace the gauge control module (see page 22-419). ■

Symptom Troubleshooting (cont'd)

Brake system indicator does not go off, and no DTCs are stored

1. Turn the ignition switch to ON (II).
2. Release the parking brake.

   Does the brake system indicator go off after several seconds?

   YES—The system is OK at this time. Refer to intermittent failures (see page 19-47). ■

   NO—Go to step 3.
3. Check the brake fluid level (see page 19-9).

   Is the level OK?

   YES—Go to step 4.

   NO—Inspect the brake system for fluid leak. If no leaks are found, replace all worn brake pads. ■
4. Check the ABS indicator.

   Does the ABS indicator stay on?

   YES—Read the DTC (see page 19-48), and do the applicable troubleshooting for the DTC. ■

   NO—Check the brake system indicator circuit: ■

   - Short to body ground between the gauge control module and the parking brake switch.
   - Short to body ground between the gauge control module and the brake fluid level switch.
   - Parking brake switch stuck ON.
   - Brake fluid level switch stuck ON.
   - Faulty gauge control module.

VSA indicator does not come on

1. Turn the ignition switch to ON (II), and watch the VSA indicator.

   Does the VSA indicator come on for several seconds?

   YES—The system is OK at this time. Refer to intermittent failures (see page 19-47). ■

   NO—Go to step 2.
2. Apply the parking brake.

   Does the brake system indicator come on?

   YES—Go to step 3.

   NO—Repair an open in the gauge control module indicator power source circuit. ■
3. Turn the ignition switch to LOCK (0).
4. Disconnect the VSA modulator-control unit 47P connector.
5. Turn the ignition switch to ON (II).

   Does the VSA indicator come on?

   YES—Go to step 6.

   NO—Do the troubleshooting for the gauge control module (see page 22-396). ■
6. Turn the ignition switch to LOCK (0).
7. Substitute a known-good VSA modulator-control unit (see page 19-105).
8. Turn the ignition switch to ON (II).

   Does the VSA indicator come on?

   YES—Check for loose terminals or poor connections at the VSA modulator-control unit 47P connector. If connections are good, replace the VSA modulator-control unit (see page 19-105), and recheck. ■

   NO—Do the troubleshooting for the gauge control module (see page 22-396). ■

VSA indicator does not go off, and no DTCs are stored

1. Check the No. 18 (40 A) fuse in the under-hood fuse/relay box.

   Is the fuse OK?

   YES—Reinstall the fuse, and go to step 2.

   NO—Replace the fuse, and recheck. If the fuse is blown, check for a short to body ground in this fuse circuit. If the circuit is OK, replace the VSA modulator-control unit (see page 19-105). ■

2. Check the No. 18 (15 A) fuse in the driver's under-dash fuse/relay box.

   Is the fuse OK?

   YES—Reinstall the fuse, and go to step 3.

   NO—Replace the fuse, and recheck. If the fuse is blown, check for a short to body ground in this fuse circuit. If the circuit is OK, replace the VSA modulator-control unit (see page 19-105). ■

3. Disconnect the VSA modulator-control unit 47P connector.

4. Measure the voltage between VSA modulator-control unit 47P connector terminal No. 1 and body ground.

VSA MODULATOR-CONTROL UNIT 47P CONNECTOR

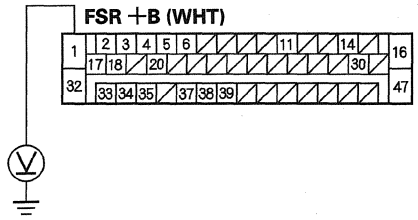

Wire side of female terminals

Is there battery voltage?

YES—Go to step 5.

NO—Repair an open in the wire between the No. 18 (40 A) fuse and the VSA modulator-control unit. ■

5. Turn the ignition switch to ON (II).

6. Measure the voltage between VSA modulator-control unit 47P connector terminal No. 38 and body ground.

VSA MODULATOR-CONTROL UNIT 47P CONNECTOR

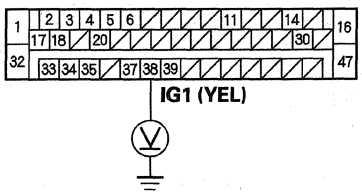

Wire side of female terminals

Is there battery voltage?

YES—Go to step 8.

NO—Repair an open in the wire between the No. 18 (15 A) fuse in the driver's under-dash fuse/relay box and the VSA modulator-control unit. ■

7. Turn the ignition switch to LOCK (0).

(cont'd)

Symptom Troubleshooting (cont'd)

8. Check for continuity between VSA modulator-control unit 47P connector terminal No. 32 and body ground.

VSA MODULATOR-CONTROL UNIT 47P CONNECTOR

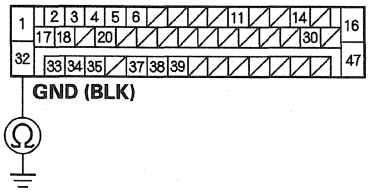

Wire side of female terminals

Is there continuity?

YES—Check for loose terminals or poor connections at the VSA modulator-control unit 47P connector. Substitute a known-good gauge control module, and recheck. If the test results are the same, substitute a known-good VSA modulator-control unit and recheck. ■

NO—Repair an open in the wire between the VSA modulator-control unit and body ground (G202). ■

VSA activation indicator does not come on at start-up (bulb check)

1. Turn the ignition switch to ON (II), and watch the VSA activation indicator.

   Does the VSA activation indicator come on for several seconds?

   YES—The system is OK at this time. Refer to intermittent failures (see page 19-47). ■

   NO—Go to step 2.

2. Apply the parking brake.

   Does the brake system indicator come on?

   YES—Go to step 3.

   NO—Repair an open in the gauge control module indicator power source circuit. ■

3. Turn the ignition switch to LOCK (0).

4. Substitute a known-good VSA modulator-control unit (see page 19-105).

5. Turn the ignition switch to ON (II).

   Does the VSA activation indicator come on?

   YES—Replace the VSA modulator-control unit (see page 19-105). ■

   NO—Do the troubleshooting for the gauge control module (see page 22-396). ■

VSA activation indicator does not go off, and no DTCs are stored

1. Turn the ignition switch to ON (II), and watch the VSA indicator.

   Does the VSA indicator go off?

   YES—The system is OK at this time. Refer to intermittent failures troubleshooting (see page 19-47).

   NO—Go to step 2. ■

2. Turn the ignition switch to LOCK (0).

3. Check the VSA OFF switch (see page 19-104).

   Is the switch OK?

   YES—Go to step 4.

   NO—Replace the VSA OFF switch (see page 19-104). ■

4. Turn the ignition switch to ON (II).

5. Clear the DTC with the HDS.

   Does the VSA activation indicator go off?

   YES—The system is OK at this time. Refer to intermittent failures (see page 19-47). ■

   NO—Go to step 6.

6. Do the VSA sensor neutral memorization (see page 19-104).

7. Clear the DTC with the HDS.

8. Check the VSA activation indicator.

   Does the VSA activation indicator go off?

   YES—The system is OK at this time. Refer to intermittent failures (see page 19-47). ■

   NO—Go to step 9.

9. Turn the ignition switch to LOCK (0).

10. Disconnect the VSA OFF switch 6P connector.

11. Remove the gauge control module, and disconnect gauge control module connector B (28P) (see page 22-419).

12. Check for continuity between the VSA OFF switch 6P connector terminal No. 4 and body ground.

VSA OFF SWITCH 6P CONNECTOR

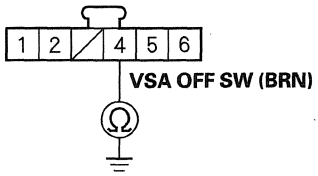

Wire side of female terminals

Is there continuity?

YES—Repair a short to body ground in the wire between the gauge control module and the VSA OFF switch. ■

NO—Check for loose terminals or poor connections at the gauge control module connectors. If connections are good, replace the gauge control module (see page 22-419) and recheck. ■

Steering Angle Sensor Replacement

NOTE: Do not damage or drop the combination switch as the steering angle sensor is sensitive to shock and vibration.

1. Make sure the ignition switch is in LOCK (0).
2. Remove the steering wheel (see page 17-22).
3. Remove the steering column cover and combination switch assembly (see page 17-25).
4. Remove the combination light switch (A) and the wiper/washer switch (B).

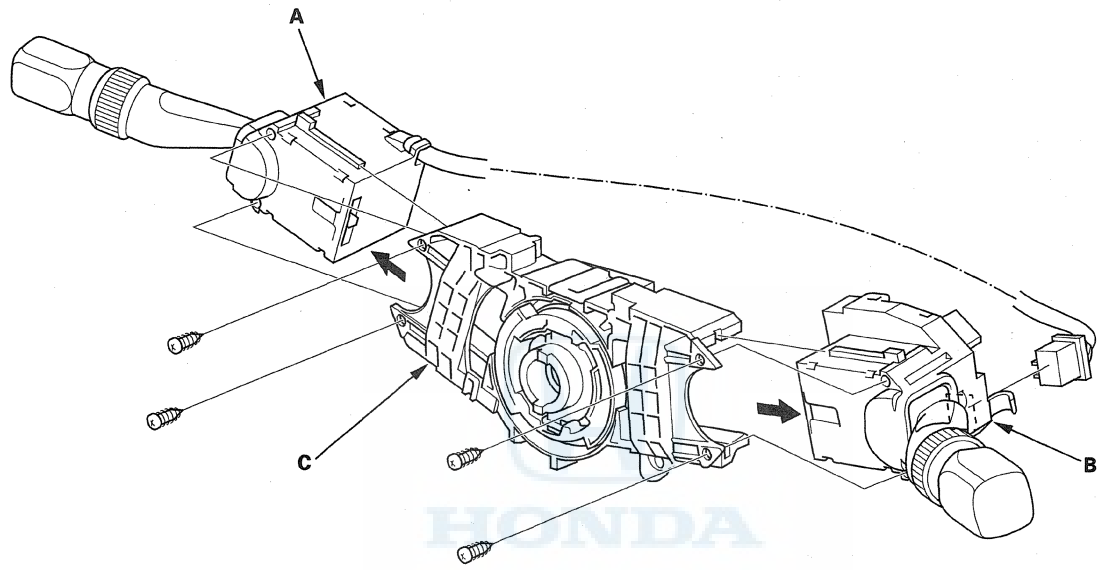

5. Replace the combination switch body complete (C).
6. Install the combination switch in the reverse order of removal.

   NOTE: Do not remove the steering angle sensor from the combination switch body.

7. Do the VSA sensor neutral position memorization (see page 19-104).
8. Do the adaptive front lighting control unit learning procedure (see page 22-267).

Yaw Rate-Lateral/Longitudinal Acceleration Sensor Replacement

NOTE:
- Do not damage or drop the sensor as it is sensitive.
- Do not use power tools.

1. Make sure the ignition switch is in LOCK (0).
2. Remove the center console side panel (see step 5 on page 20-93).
3. Remove the center console panel (see step 1 on page 20-92).
4. Remove the shift lever mounting bolts (see step 7 on page 14-231).

   NOTE: Only remove items needed to gain access.

5. Remove the yaw rate-lateral/longitudinal acceleration sensor bracket attachment bolts, and then disconnect the sensor connector (A).

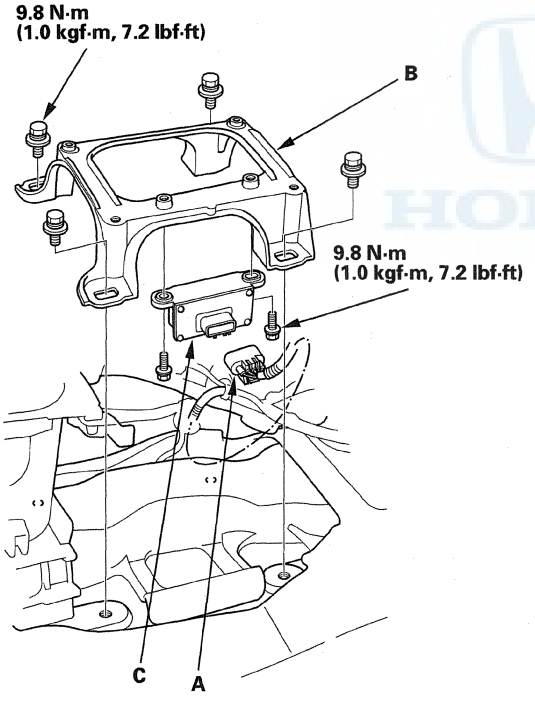

6. Pull out the yaw rate-lateral/longitudinal acceleration sensor bracket (B) with the yaw rate-lateral/longitudinal acceleration sensor.
7. Remove the sensor mounting bolts, and then separate the sensor (C) from the bracket.
8. Install the sensor in the reverse order of removal.
9. Do the VSA sensor neutral position memorization (see page 19-104).

VSA Sensor Neutral Position Memorization

NOTE: Make sure to connect and disconnect the HDS to the 16P data link connector (DLC) with the ignition switch in LOCK (0).

1. Start the engine, let it idle.
2. Slowly drive the vehicle straight without operating the steering wheel for 3 m (10 ft) or more, then park the vehicle on a flat ahead surface while holding the steering wheel in the straight ahead position.
3. With the ignition switch in LOCK (0), connect the HDS to the 16P data link connector (DLC) (A) under the driver's side of the dashboard.

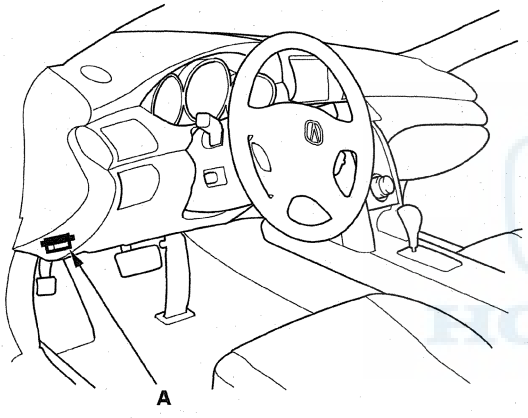

4. Turn the ignition switch to ON (II).
5. Do the VSA sensor neutral position memorization with the HDS.

   NOTE:
   - VSA neutral position memorized by clearing DTC with the HDS.
   - Do not press the brake pedal during this procedure.
   - Make sure the HDS communicates with the vehicle and the VSA modulator-control unit. If it doesn't troubleshoot the DLC circuit (see page 11-211).

6. Turn the ignition switch to LOCK (0).

VSA OFF Switch Test

1. Remove the instrument fascia (see page 20-99).
2. Remove the VSA OFF switch (A) from the switch panel.

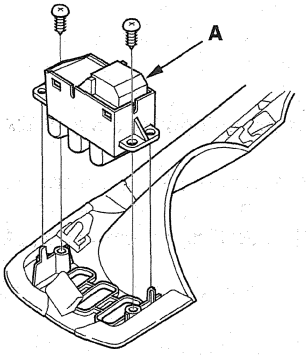

3. Disconnect the VSA OFF switch 6P connector.
4. Check for continuity between the VSA OFF switch 6P connector terminals No. 4 and No. 6. There should be continuity when the button is pressed, and no continuity when the button is released.

VSA OFF SWITCH 6P CONNECTOR

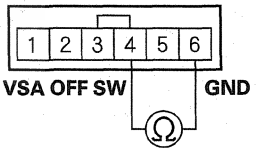

Terminal side of male terminals

5. Install the VSA OFF switch in the reverse order of removal.

VSA Modulator-Control Unit Removal and Installation

NOTE:
- Do not spill brake fluid on the vehicle; it may damage the paint. If brake fluid gets on the paint, wash it off immediately with water.
- Be careful not to damage or deform the brake lines during removal and installation.
- To prevent the brake fluid from flowing, plug and cover the hose ends and joints with a shop towel or equivalent material.

Removal

1. Make sure the ignition switch is LOCK (0).
2. Remove the right upper fender trim (see page 20-162).
3. Remove the A/C line mounting bolt (A).

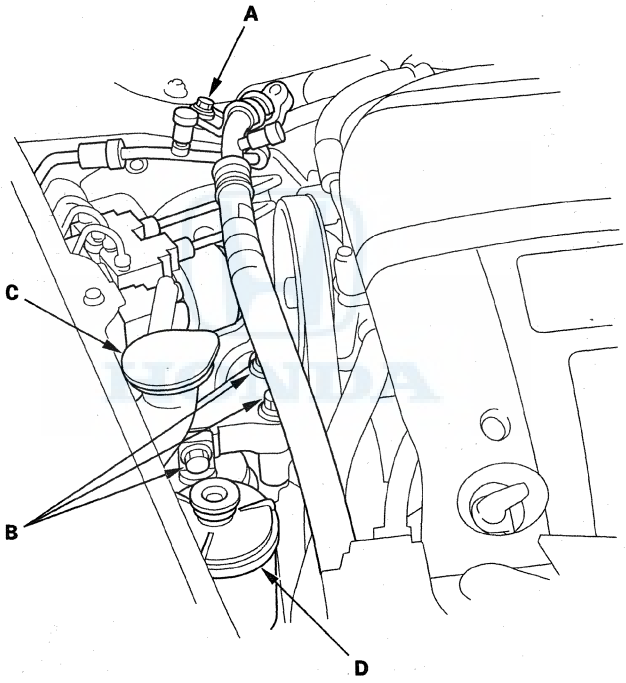

4. Remove the engine mount bracket mounting bolts (B).
5. Remove the upper portion of the washer reservoir (C).
6. Remove the power steering fluid reservoir (D) bracket.

(cont'd)

VSA Modulator-Control Unit Removal and Installation (cont'd)

7. Pull down the lock (A) of the VSA modulator-control unit 47P connector (B), and the connector disconnects itself.

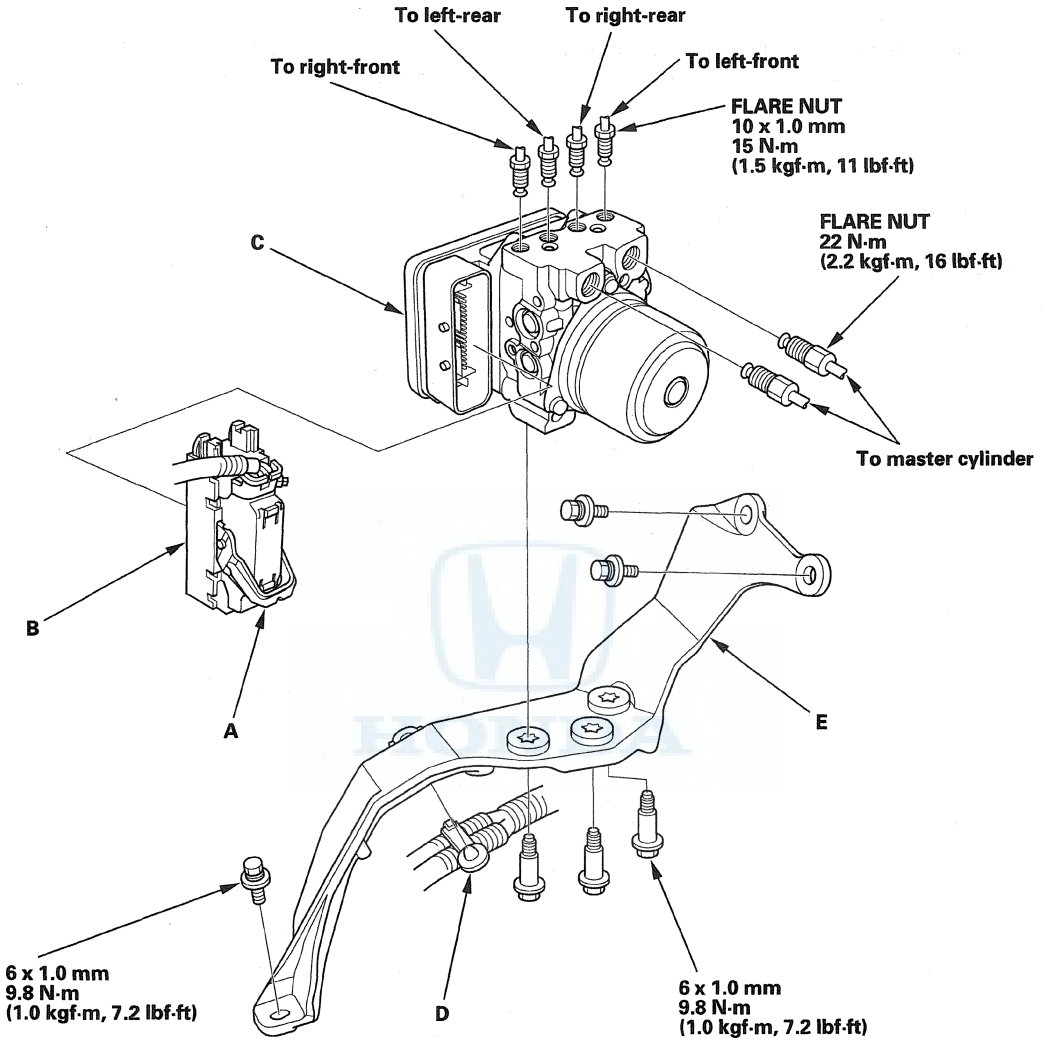

8. Disconnect the six brake lines from the VSA modulator-control unit (C).
9. Disconnect the harness clip (D).
10. Remove the three 6 mm bolts, then remove the VSA modulator-control unit with bracket (E) from the body.
11. Remove the three 6 mm bolts, then remove the VSA modulator-control unit from the bracket.

Installation

1. Install the VSA modulator-control unit to the bracket, then tighten the three 6 mm bolts.
2. Install the VSA modulator-control unit/bracket on the body, then tighten the three 6 mm bolts.
3. Reconnect the six brake lines, then tighten the nuts.
4. Align the connecting surface of the VSA modulator-control unit 47P connector.
5. Carefully push in the lock of the VSA modulator-control unit 47P connector until you hear it click into place, then confirm the connector is fully seated.
6. Install the power steering fluid reservoir bracket and upper portion of the washer reservoir.
7. Install the engine mount bracket mounting bolts.
8. Install the A/C line mounting bolt.
9. Install the right upper fender trim (see page 20-162).
10. Bleed the brake system, starting with the front wheels (see page 19-9).
11. Do the VSA sensor neutral position memorization (see page 19-104).
12. Start the engine, and check that the ABS and VSA indicators go off.
13. Test-drive the vehicle, and check that the ABS and VSA indicators do not come on.
14. If the brake pedal is now spongy, there may be air trapped in the modulator and then induced into the normal brake system during modulation. Bleed the brake system again, starting with the front wheels (see page 19-9).

Wheel Speed Sensor Inspection

NOTE: The outer board joint must be removed to inspect the magnetic encoder.

- Front driveshaft removal (see page 16-4).
- Rear driveshaft removal (see page 16-28).

1. Clean the magnetic encoder, and make sure no metal or other debris is stuck to the magnetic encoder surface.

2. Check the magnetic encoder (A) for damage. If cracked or damaged, replace the encoder (wheel bearing).

   - Front hub bearing unit replacement (see page 18-11).
   - Rear hub bearing unit replacement (see page 18-26).

Front

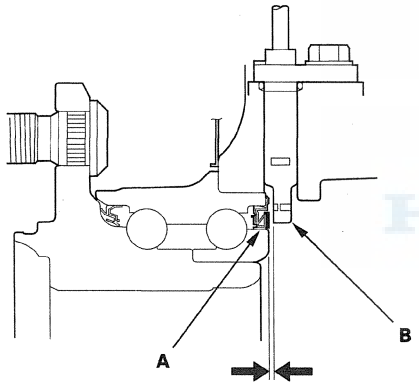

1.0—1.7 mm (0.04—0.07 in)

Rear

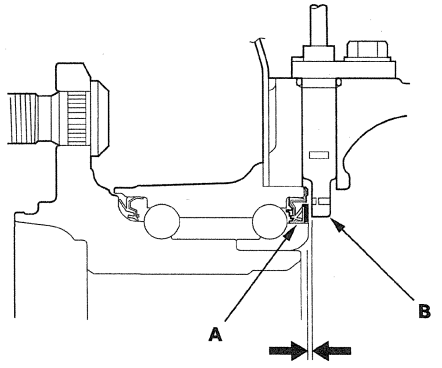

0.9—1.8 mm (0.04—0.07 in)

3. Measure the air gap between the wheel speed sensor (B) and the magnetic encoder all the way around while rotating the encoder.

Standard:
Front: 1.0—1.7 mm (0.04—0.07 in)
Rear: 0.9—1.8 mm (0.04—0.07 in)

Wheel Speed Sensor Replacement

NOTE:
- Install the sensor carefully to avoid twisting the wires.
- Replace the clamps (A) when the wheel speed sensors are removed or replaced.

Front

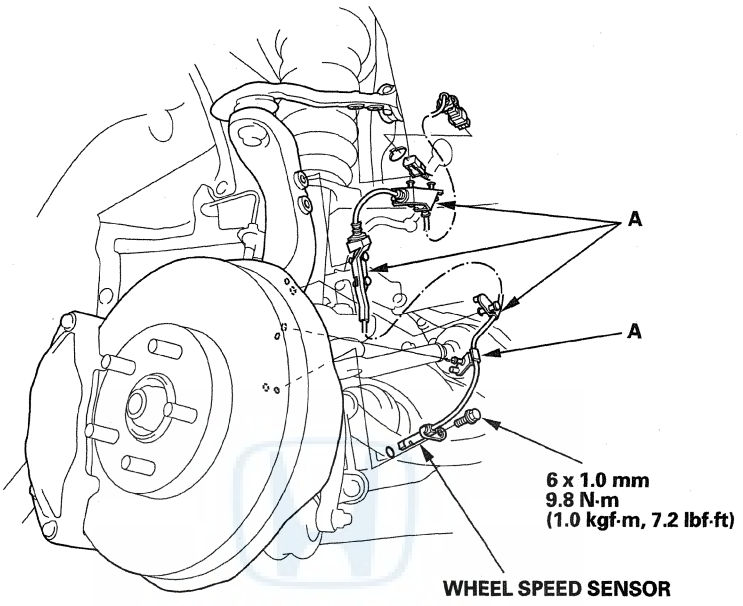

Rear

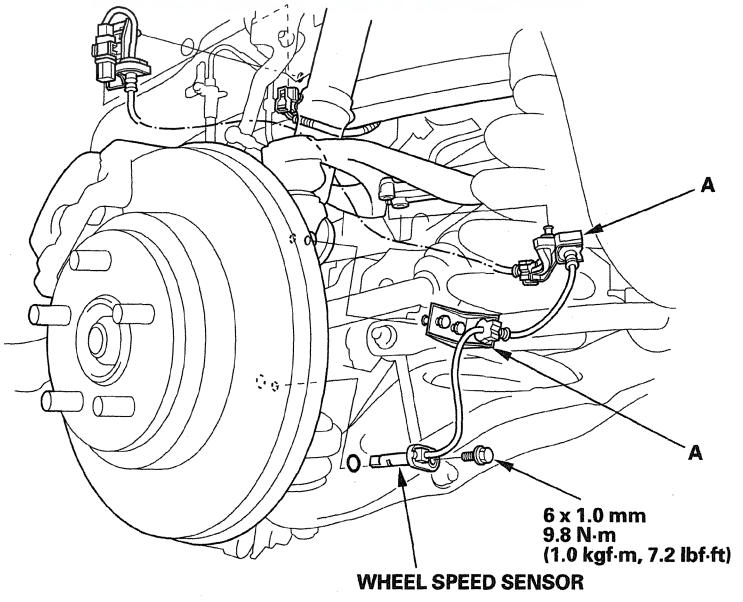

SUPPLEMENTAL RESTRAINT SYSTEM (SRS) (If body maintenance is required)

The Acura RL SRS includes a driver's airbag in the steering wheel hub, a passenger's airbag in the dashboard above the glove box, seat belt tensioners in the front seat belt retractors, side curtain airbags in the sides of the roof, and side airbags in the front seat-backs. Information necessary to safely service the SRS is included in this Service Manual. Items marked with an asterisk (*) on the contents page include or are located near SRS components. Servicing, disassembling, or replacing these items require special precautions and tools, and should be done by an authorized Acura dealer.

- To avoid rendering the SRS inoperative, which could lead to personal injury or death in the event of a severe frontal or side collision, all SRS service work should be done by an authorized Acura dealer.
- Improper service procedures, including incorrect removal and installation of the SRS, could lead to personal injury caused by unintentional deployment of the airbags, side airbags, and/or side curtain airbags.
- Do not bump or impact the SRS unit, front impact sensors, side impact sensors, or rear safing sensor, especially when the ignition switch is in ON (II), or for at least 3 minutes after the ignition switch is turned to LOCK (0); otherwise, the system may fail in a collision, or the airbags may deploy.
- SRS electrical connectors are identified by yellow color coding. Related components are located in the steering column, center console, dashboard, driver's dashboard lower cover, in the dashboard above the glove box, in the front seats, in the roof side, and around the floor. Do not use electrical test equipment on these circuits.

HONDA



Body

Special Tools 20-2

Doors

Component Location Index - Front Door 20-3
Component Location Index - Rear Door ... 20-6
Front Door Panel Removal/Installation 20-9
Front Door Pull Pocket Bracket Replacement 20-12
Front Door Outer Handle Replacement 20-12
Front Door Latch Replacement 20-15
Front Door Glass and Regulator Replacement 20-16
Front Door Sash Inner Trim Replacement 20-18
Front Door Sash Outer Trim Replacement 20-19
Front Door Glass Outer Weatherstrip Replacement 20-19
Front Door Subseal Replacement 20-20
Front Door Weatherstrip Replacement 20-21
Rear Door Panel Removal/Installation 20-21
Rear Door Outer Handle Replacement 20-24
Rear Door Latch Replacement 20-26
Rear Door Glass, Quarter Glass, and Regulator Replacement 20-27
Rear Door Sash Inner Trim Replacement 20-30
Rear Door Sash Outer Trim Replacement 20-31
Rear Door Glass Outer Weatherstrip Replacement 20-31
Rear Door Subseal Replacement 20-32
Rear Door Weatherstrip Replacement 20-33
Front and Rear Door Glass Adjustment ... 20-34
* Front and Rear Door Position Adjustment 20-35
Front and Rear Door Striker Adjustment 20-36

Mirrors

Component Location Index 20-37
Power Mirror Replacement 20-38
Mirror Holder Replacement 20-38
Rearview Mirror Replacement 20-39

Glass

Component Location Index 20-41
Windshield Replacement 20-42
Rear Window Replacement 20-47

Moonroof

Component Location Index 20-53
Symptom Troubleshooting Index 20-54
Glass Position Adjustment 20-55
Glass Replacement 20-55
Wind Deflector Replacement 20-56
Drain Channel Replacement 20-57
Sunshade Replacement 20-58
Motor Replacement 20-59
* Frame and Drain Tube Replacement 20-60
Drain Channel Slider and Cable Assembly Replacement 20-62
Closing Force and Opening Drag Check ... 20-65

Interior Trim

Component Location Index 20-66
Trim Removal/Installation - Door Areas ... 20-67
* Trim Removal/Installation - Pillar Areas ... 20-69
* Trim Removal/Installation - Rear Shelf Area 20-80
Rear Window Sunshade Removal/Installation 20-81
Rear Window Sunshade Disassembly/Reassembly 20-82
Trim Removal/Installation - Trunk Area ... 20-83
Trim Removal/Installation - Trunk Lid 20-85
* Headliner Removal/Installation 20-86
* Carpet Replacement 20-90

Consoles

* Center Console Removal/Installation 20-92
Center Console Armrest Removal/Installation 20-94
Center Console Armrest Disassembly/Reassembly 20-95

Dashboard

Center Trim Removal/Installation 20-97
Utility Pocket Removal/Installation 20-97
Utility Pocket Housing Removal/Installation 20-98
Driver's Switch Panel Removal/Installation 20-99
Instrument Fascia Removal/Installation ... 20-99
Driver's Dashboard Lower Cover Removal/Installation 20-100
Driver's Dashboard Undercover Removal/Installation 20-100
Driver's Vent Panel Removal/Installation 20-101
Passenger's Vent Panel Removal/Installation 20-101
Document Tray Removal/Installation 20-102
Passenger's Dashboard Undercover Removal/Installation 20-102
* Glove Box Removal/Installation 20-103
Glove Box Damper Replacement 20-104
Glove Box Lock Cylinder Replacement 20-104
Side Defogger Vent Trim Removal/Installation 20-105
Dashboard Center Vent Removal/Installation 20-106
Dashboard Side Vent Removal/Installation 20-106
* Dashboard Replacement 20-107
* Dashboard/Steering Hanger Beam Removal/Installation 20-109

Seats

Component Location Index 20-112
Front Seat Active Head Restraint Inspection 20-113
* Front Seat Removal/Installation 20-114
* Front Seat Recline Motor Replacement 20-117
* Front Seat Lumbar Support Replacement 20-118
* Front Seat Slide Motor Replacement 20-120
* Front Seat Up-down Motor Replacement 20-122
* Front Seat Frame Removal/Installation 20-126
* Front Seat-back Cover Replacement 20-128
* Front Seat Cushion Cover Replacement 20-133
* Front Seat Ventilation Blower Motor/Duct Replacement 20-137
Rear Seat Removal/Installation 20-140
Rear Seat Armrest Beverage Holder Replacement 20-141
Rear Seat Armrest Replacement 20-142
Trunk Pass-through Cover Key Cylinder Replacement 20-143
Rear Seat Head Restraint Replacement ... 20-144
Rear Seat Head Restraint Actuator/Wire Harness Replacement 20-144
Rear Seat-back Upper Flap Replacement 20-145
Rear Seat-back Cover Replacement 20-146
Rear Seat Cushion Cover Replacement 20-147
Rear Seat Head Restraint Cover/Pad Replacement 20-148

Bumpers

Front Bumper Removal/Installation 20-149
Front Bumper Lower Face Replacement 20-150
Front Air Spoiler Replacement 20-151
Front Bumper Lower Stay Replacement 20-151
Front Bumper Duct Trim Replacement 20-152
Rear Bumper Removal/Installation 20-153
Rear Bumper Lower Grille Replacement 20-154

Hood

Hood Adjustment 20-155
Hood Support Strut Replacement 20-156
Hood Seal Replacement 20-157
Hood Insulator Replacement 20-157

Trunk Lid

Trunk Lid Adjustment 20-158
Trunk Lid Support Strut Replacement 20-159
Trunk Lid Striker Replacement 20-159
Trunk Lid Weatherstrip Replacement 20-160
Trunk Lid Dynamic Damper Replacement 20-160
Trunk Lid Hinge Arm Replacement 20-161

Exterior Trim

Upper Grille Replacement 20-162
Upper Fender Trim Replacement 20-162
Upper Grille Cover Replacement 20-163
Cowl Cover Replacement 20-164
Windshield Side Trim Replacement 20-165
Roof Molding Replacement 20-167
Roof Drip Molding Replacement 20-168
Door Molding Replacement 20-169
Side Sill Panel Replacement 20-170
Side Sill Protection Tape Replacement 20-172
Rear License Trim Replacement 20-173
Taillight Trim Replacement 20-174
Trunk Opening Panel Replacement 20-174
Emblem/Sticker Replacement 20-175

Fenderwell

Front Inner Fender Replacement 20-176
Splash Shield Replacement 20-177
Front Fender Fairing Replacement 20-178
Rear Inner Fender Replacement 20-179
Rear Air Outlet Replacement 20-180
Rear Wheel Arch Protector Replacement 20-180
Side Undercarriage Cover Replacement 20-181
Rear Undercarriage Cover Replacement 20-181

Openers

Component Location Index 20-182
Hood Opener Cable Replacement 20-183
Trunk Lid Opener Cable Replacement 20-184
Hood Latch Replacement 20-185
Trunk Lid Latch Replacement 20-186
Hood Release Handle Replacement 20-187
Fuel Fill Door Latch/Actuator Replacement 20-188

Frame

Frame Brace Replacement 20-189
Subframe Replacement 20-190
Frame Repair Chart 20-194



Special Tools

Ref. No.	Tool Number	Description	Qty
①	07AAC-SJAA100	Push Pin Puller	1
②	070AG-SJAA10S	Sub Frame Alignment Pin	1

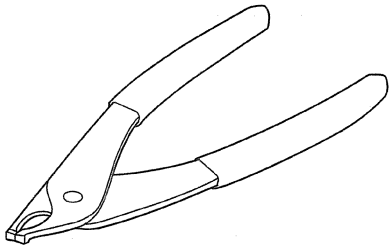

①

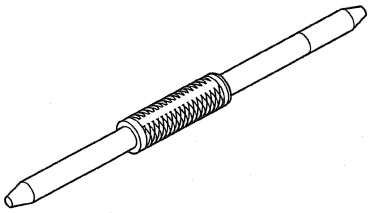

②

Component Location Index - Front Door

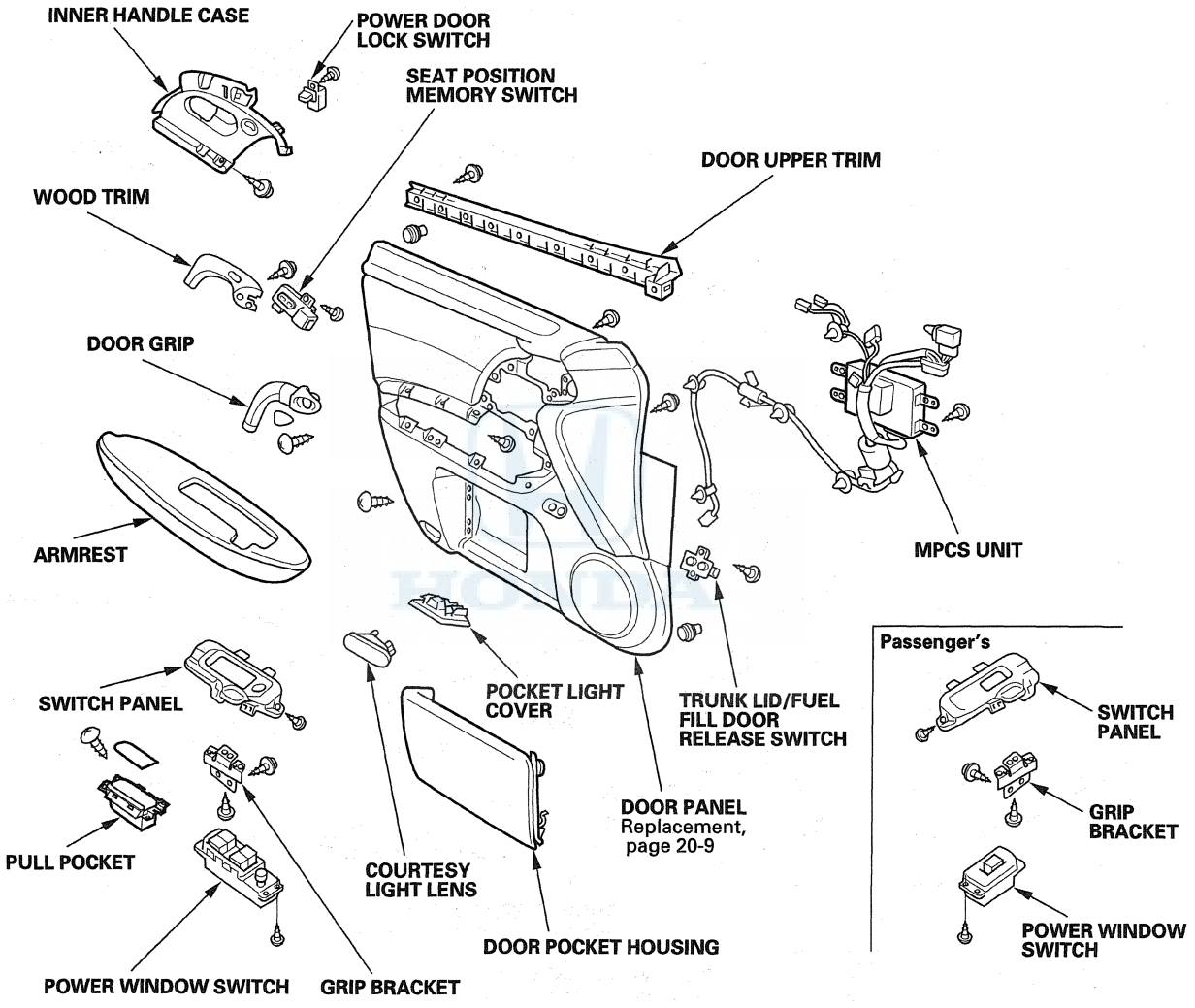

(cont'd)

Component Location Index - Front Door (cont'd)

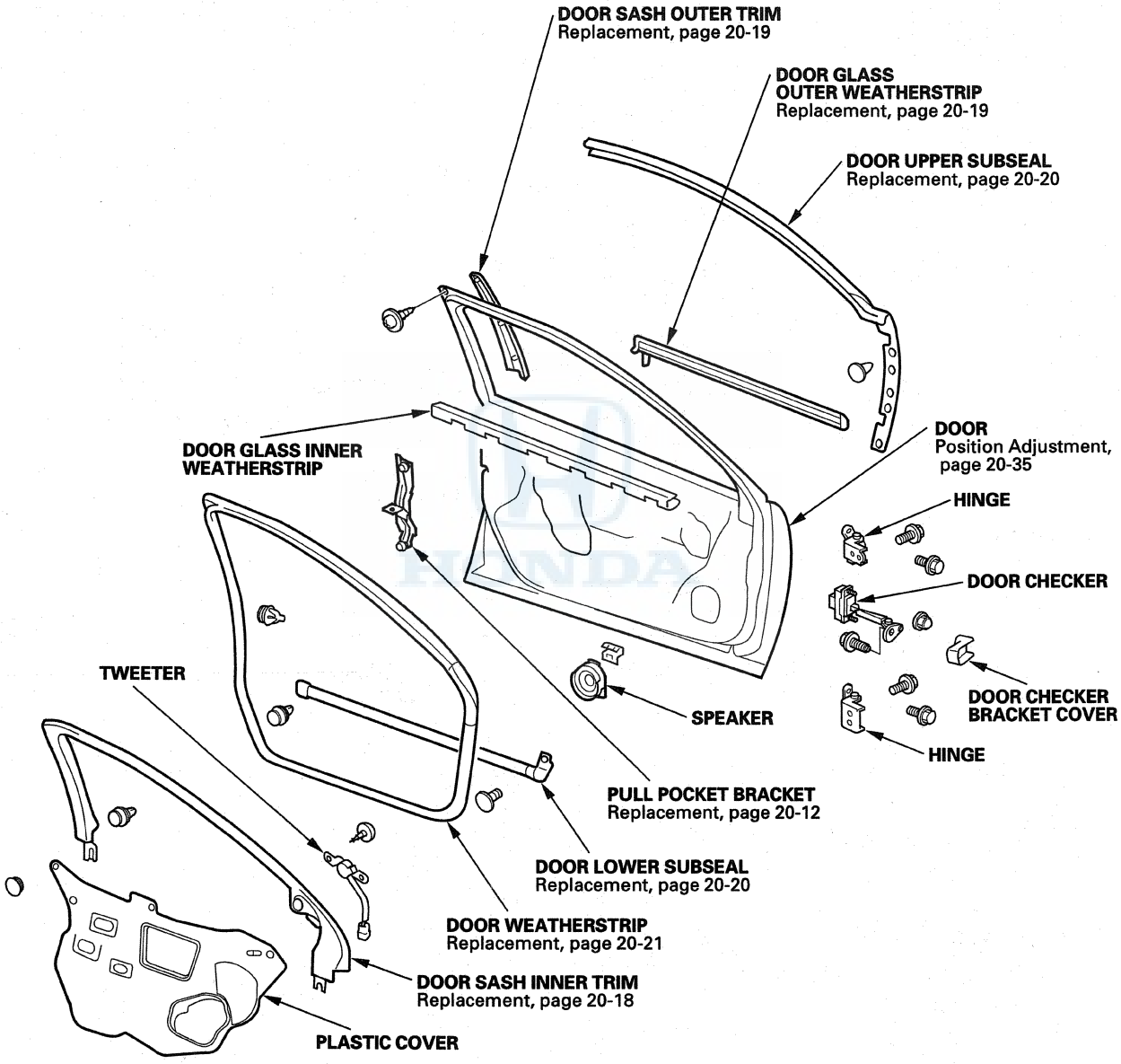

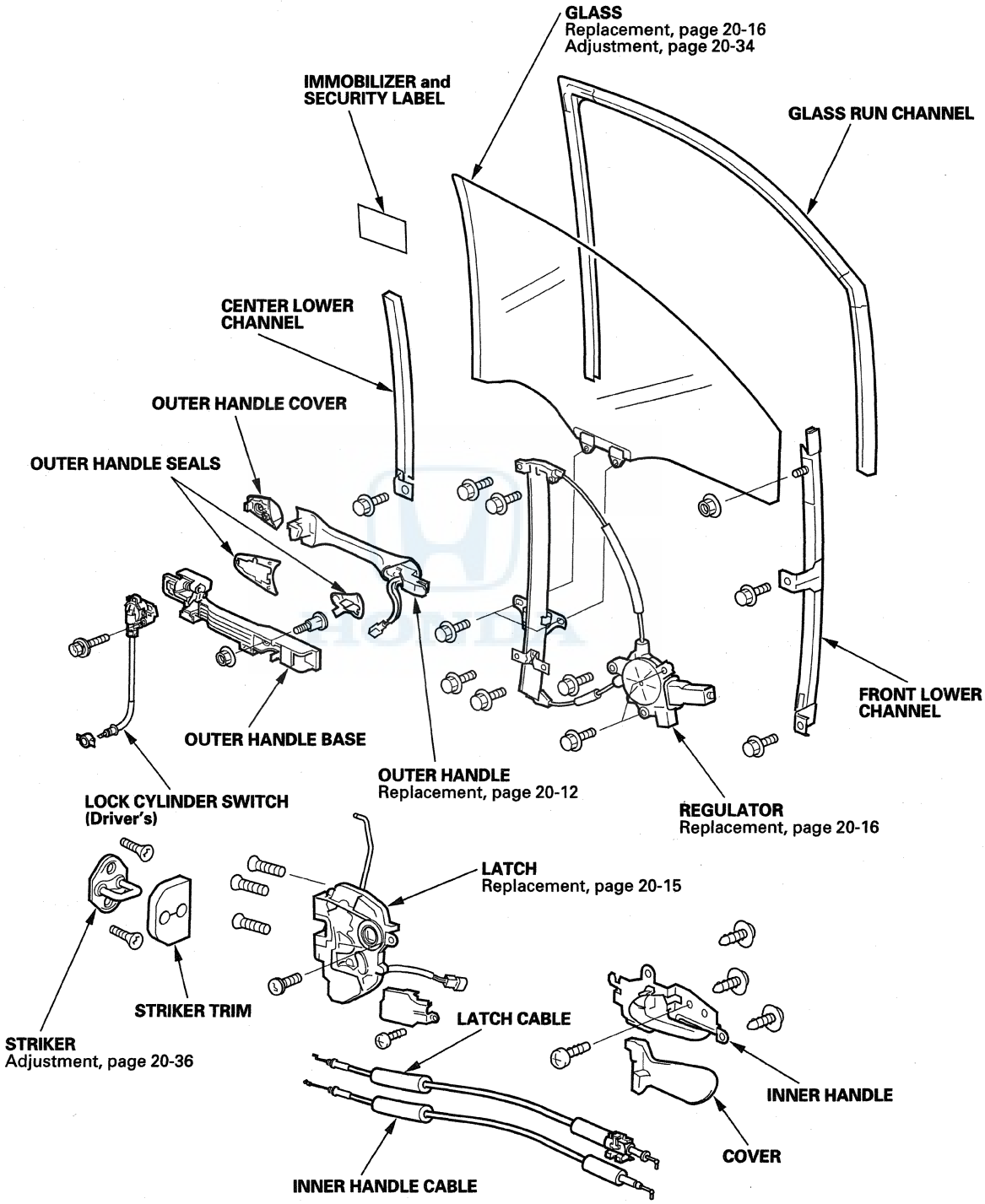
GLASS
Replacement, page 20-16
Adjustment, page 20-34
IMMOBILIZER and SECURITY LABEL
GLASS RUN CHANNEL
CENTER LOWER CHANNEL
OUTER HANDLE COVER
OUTER HANDLE SEALS
FRONT LOWER CHANNEL
OUTER HANDLE BASE
OUTER HANDLE
Replacement, page 20-12
LOCK CYLINDER SWITCH (Driver's)
REGULATOR
Replacement, page 20-16
LATCH
Replacement, page 20-15
STRIKER TRIM
LATCH CABLE
STRIKER
Adjustment, page 20-36
INNER HANDLE
COVER
INNER HANDLE CABLE

Component Location Index - Rear Door

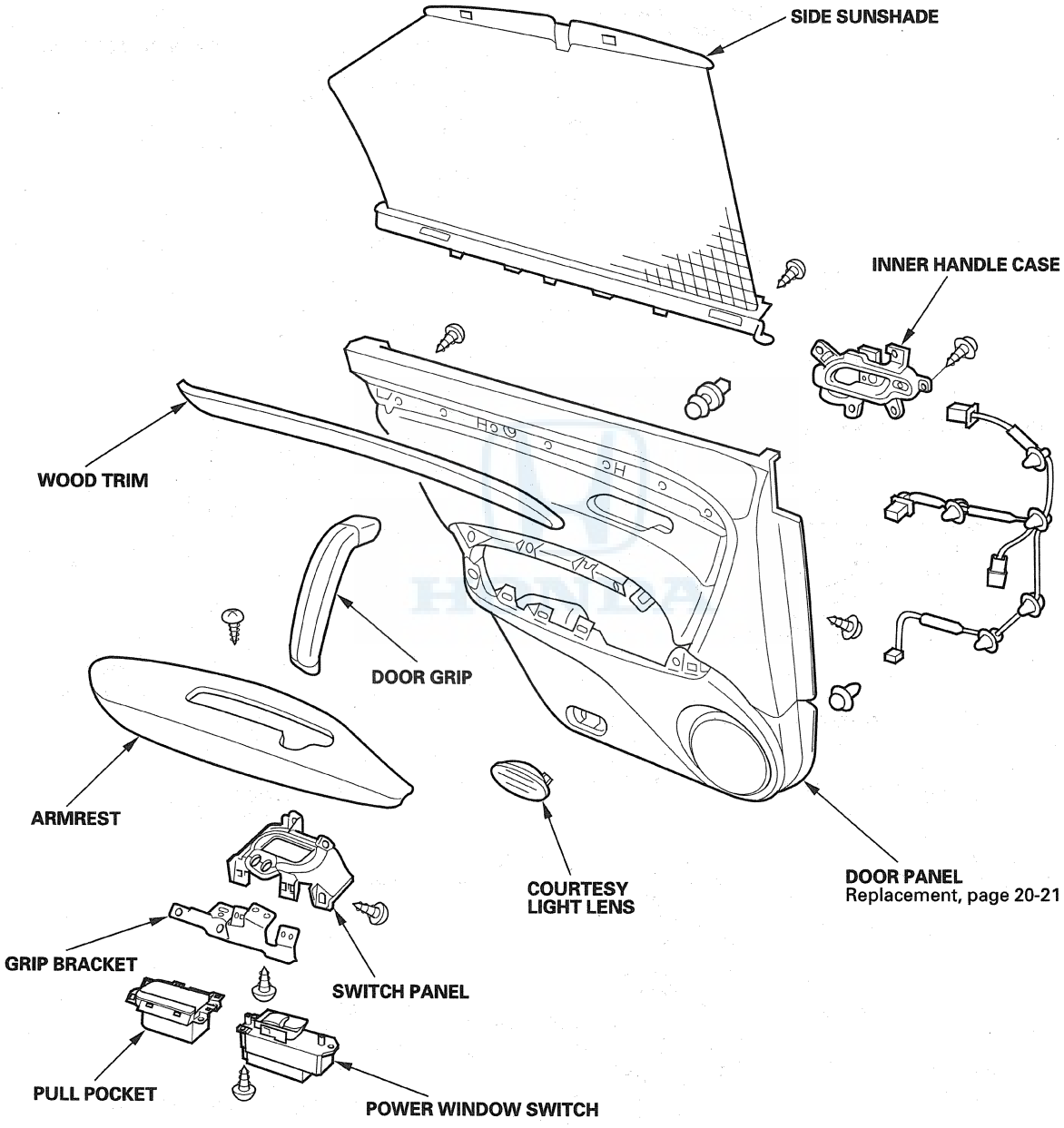

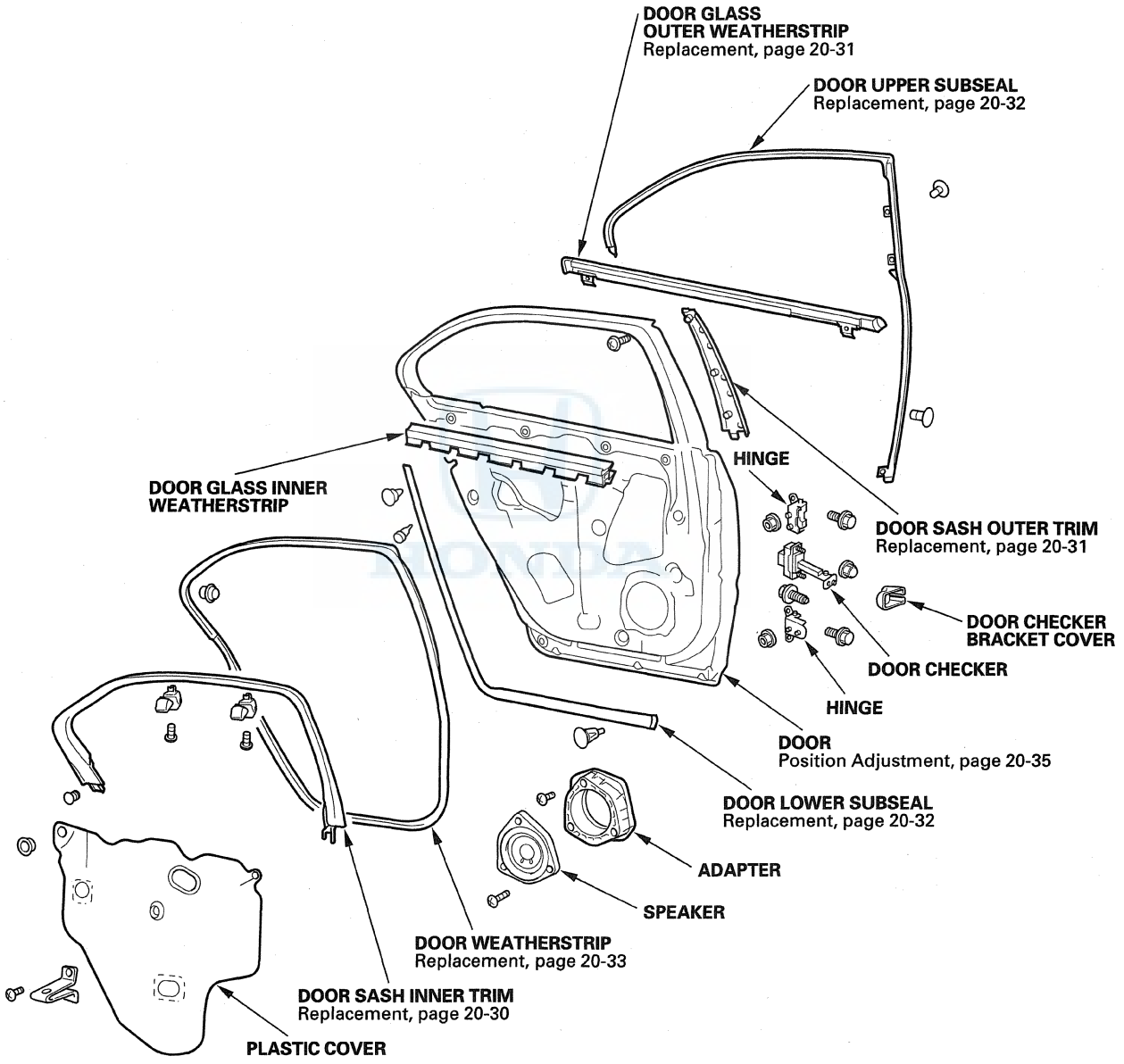
DOOR GLASS
OUTER WEATHERSTRIP
Replacement, page 20-31
DOOR UPPER SUBSEAL
Replacement, page 20-32
HINGE
DOOR GLASS INNER
WEATHERSTRIP
DOOR SASH OUTER TRIM
Replacement, page 20-31
DOOR CHECKER
BRACKET COVER
DOOR CHECKER
HINGE
DOOR
Position Adjustment, page 20-35
DOOR LOWER SUBSEAL
Replacement, page 20-32
ADAPTER
SPEAKER
DOOR WEATHERSTRIP
Replacement, page 20-33
DOOR SASH INNER TRIM
Replacement, page 20-30
PLASTIC COVER

(cont'd)

Component Location Index - Rear Door (cont'd)

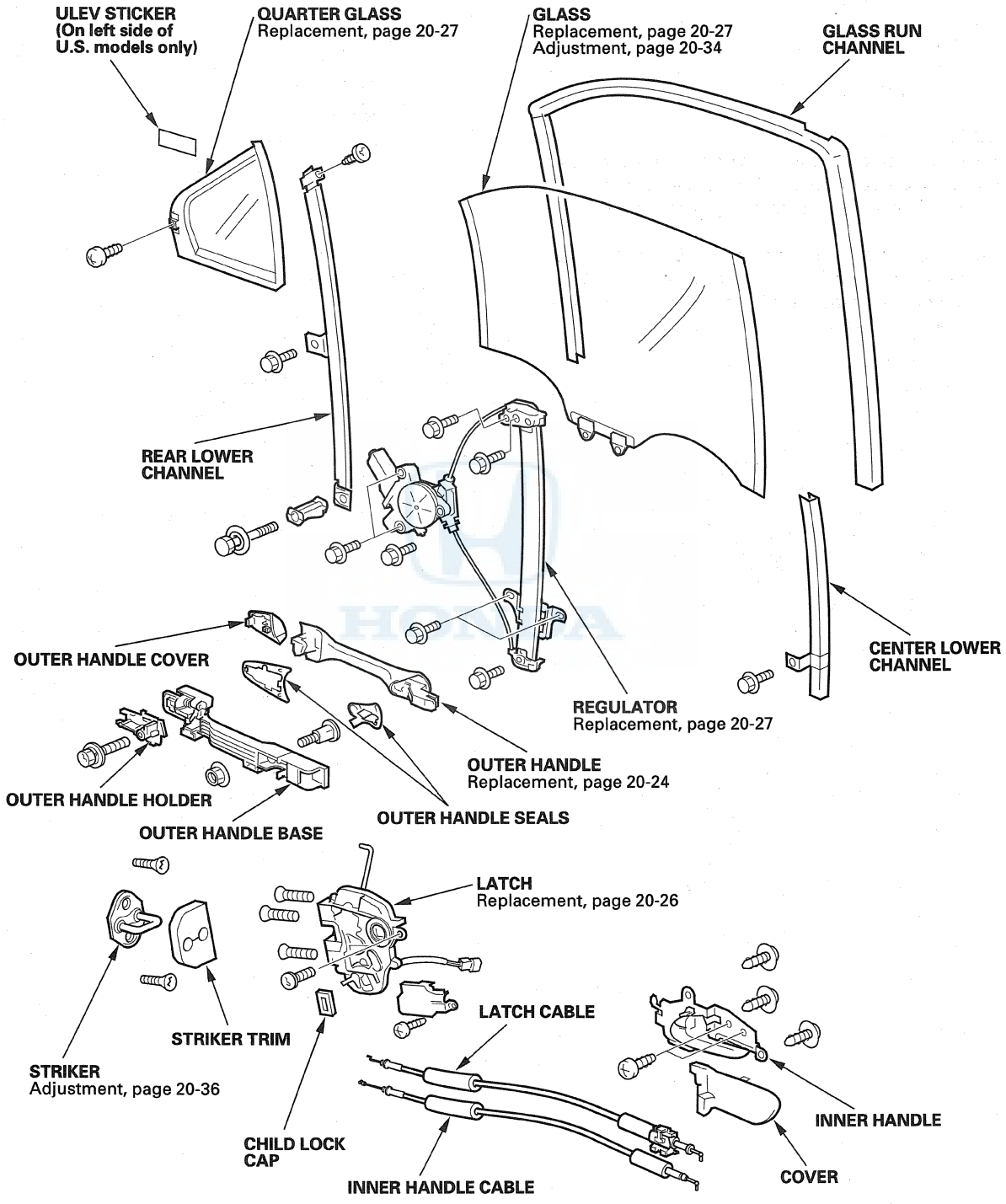

Front Door Panel Removal/Installation

Special Tools Required
- KTC trim tool set SOJATP2014 *
- Trim pad remover, Snap-on A 177A or equivalent, commercially available

* Available through the Acura Tool and Equipment Program; 888-424-6857

NOTE:
- Take care not to scratch the door and related parts.
- Use the appropriate tool from the KTC trim tool set to avoid damage when removing components.

1. Using a trim tool, push on the bottom hook (A) and pivot the cover (B) on the upper hooks (C), then detach the front hook (D), and then remove the cover and the screw securing the inner handle (E).

Fastener Location
▶ : Screw, 1

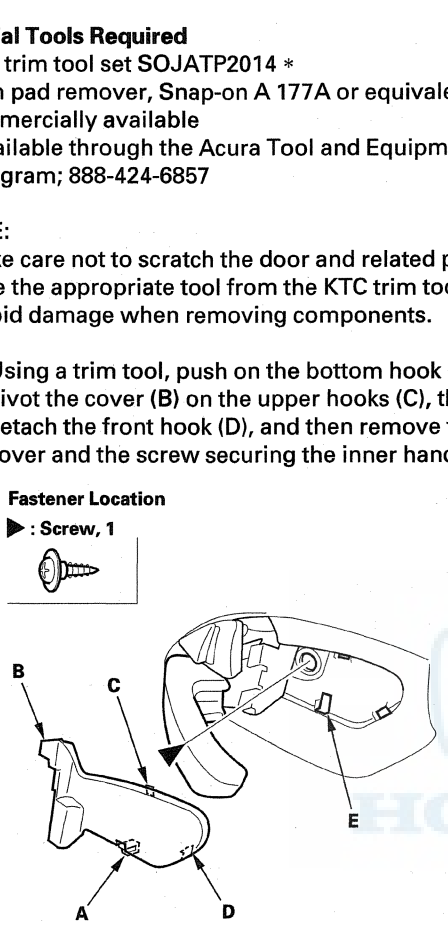

2. Using a trim tool, push up the rubber mat (A), then remove the screw.

Fastener Location
▶ : Screw, 1

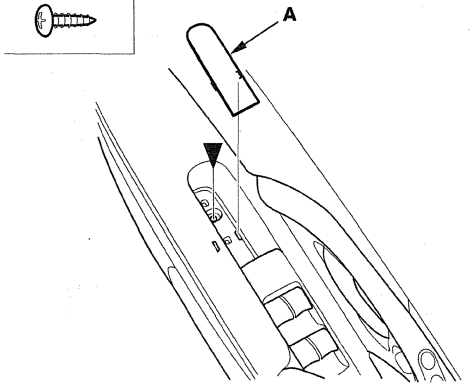

3. Using a trim tool, pull the top edge of the pocket light cover (A) out to release the hooks (B), and release the hooks (C, D), then remove the cover, and then remove the screw.

Fastener Location
▶ : Screw, 1

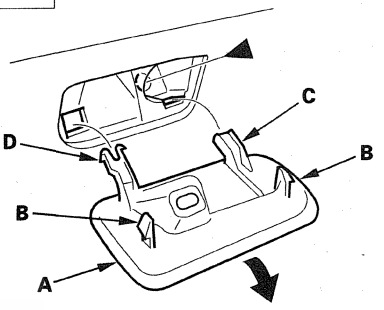

4. Using a trim tool, pry out the notch (A) of the grip cover (B) to detach the hook (C), and then pull out the cover to release the remaining hooks (D), then remove the cover and screw from the grip (E).

Fastener Location
▶ : Screw, 1

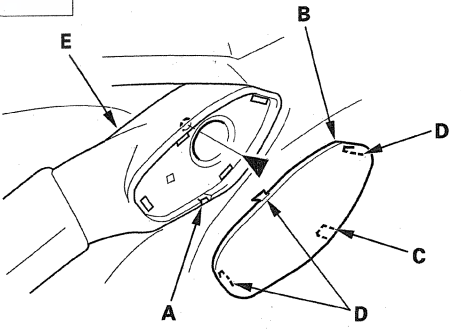

(cont'd)

Front Door Panel Removal/Installation (cont'd)

5. Remove the door panel (A) with as little bending as possible to avoid creasing or breaking it.

   1 Release the clips (B, C) that hold the door panel with a commercially available trim pad remover.
   2 While holding the door panel away from the door, disconnect the door subharness connector (D) and the power mirror connector (E).
   3 While holding the door panel away from the door, remove the screws (F), then remove the inner handle (G) from the door panel.

   NOTE: The inner handle cable (H) and the lock cable (I) are connected to the inner handle. Do not pull the door panel up too far, or the these cable will be damaged.

Fastener Locations

B ▷ : Clip, 9 (White) C ▷ : Clip, 2 (Orange) F ▶ : Screw, 3

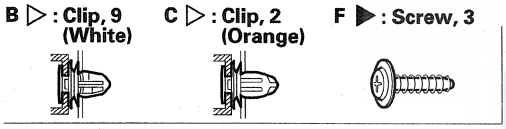

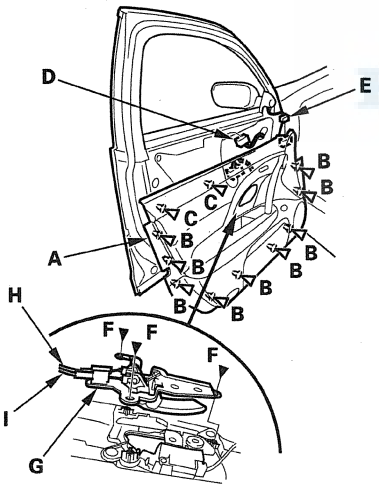

6. Replace all of the door panel clips with new ones.

7. If necessary, remove the door glass inner weatherstrip (A) from the door by pulling it up.

   NOTE: If you are only removing the door panel, go to step 12. If you are doing further disassembly, proceed to step 8.

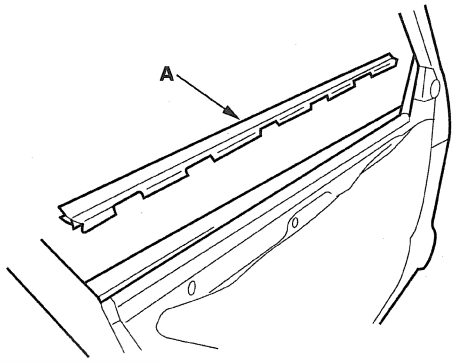

Inner handle removal

8. If necessary, remove the cable fastener (A) from the inner handle (B), and then disconnect the lock cable (C) from the joint bushing (D). Disconnect the inner handle cable (E) from the joint bushing (F), then remove the inner handle.

   NOTE: If the cable fasteners are damaged or stress-whitened, replace them with new ones.

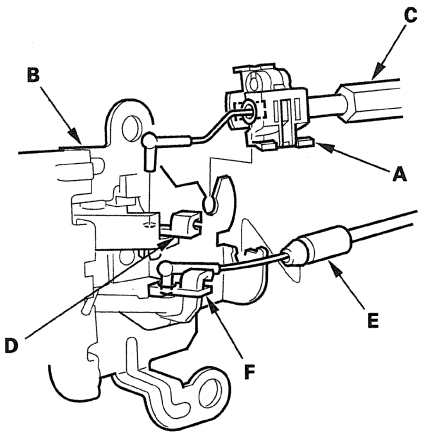

Armrest assembly/grip assembly removal

9. Disconnect the power window switch connector (A) and the seat position memory switch connector (B).

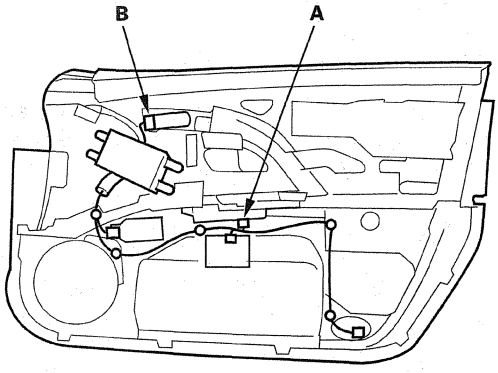

10. If necessary, remove the screws, then remove the armrest/grip assembly (A) and the wood trim (B) from the door panel (C).

Fastener Locations
▶ : Screw, 20

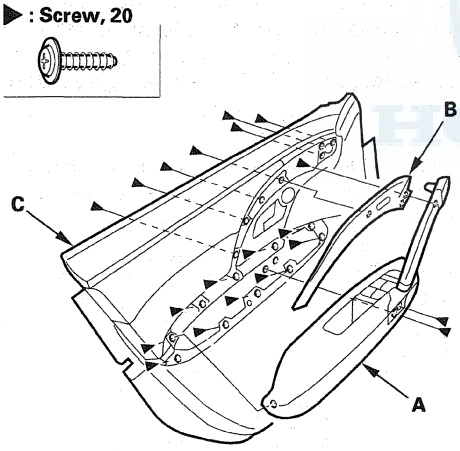

11. If necessary, remove the screws (A, B), then separate the door grip (C), the armrest (D), the power window switch panel (E), the grip bracket (F), the pull pocket (G) and the power window switch (H).

Fastener Locations
A ▶ : Screw, 11 B ▶ : Screw, 4

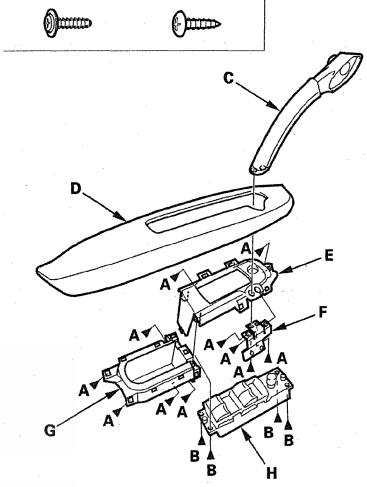

12. Install the door panel in the reverse order of removal, and note these items:

- If the clips are damaged or stress-whitened, replace them with new ones.
- Replace any damaged cable fasteners with new ones.
- Make sure the connectors are plugged in properly, and the cables are connected securely.
- When reinstalling the door panel, make sure the plastic cover is installed properly and sealed around its outside perimeter to seal out water.
- The latch cable (A) should be fixed to the cable fastener (B) with the latch in lock position as shown.
- Make sure the window, the power door lock, the trunk lid, and the fuel fill door operate properly.

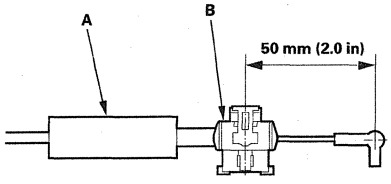

Front Door Pull Pocket Bracket Replacement

NOTE: Put on gloves to protect your hands.

1. Raise the glass fully.
2. Remove the door panel (see page 20-9).
3. Remove the cap (A) and remove the plastic cover (B) as needed.

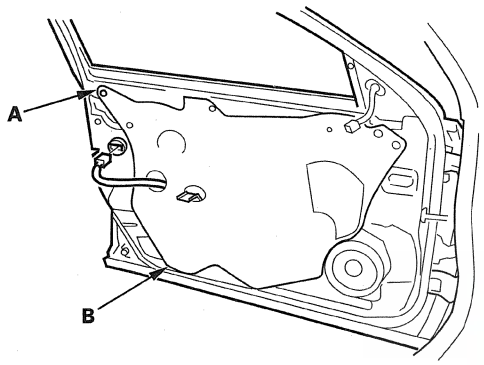

4. Loose the bolts (A), then remove the door pull pocket bracket (B) upward and push out.

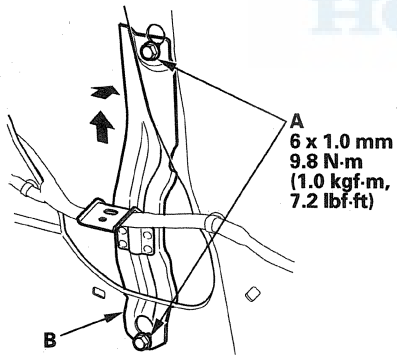

5. Install the bracket in the reverse order of removal, and note these items:
   - Replace any damaged parts with new ones.
   - When reinstalling the door panel, make sure the plastic cover is installed properly and sealed around its outside perimeter to seal out water.

Front Door Outer Handle Replacement

NOTE: Put on gloves to protect your hands.

1. Raise the glass fully.
2. Remove the door panel (see page 20-9).
3. Disconnect the latch actuator connector (A) and remove the cap (B), and then remove the plastic cover (C) as needed.

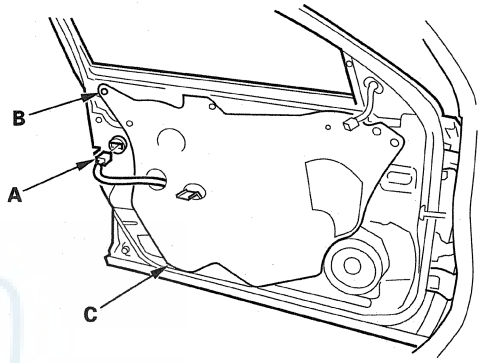

4. Remove the door pull pocket bracket (see step 4 on page 20-12).
5. Pull the glass run channel (A) away as needed, and remove the bolt, then remove the center lower channel (B) by pulling it downward.

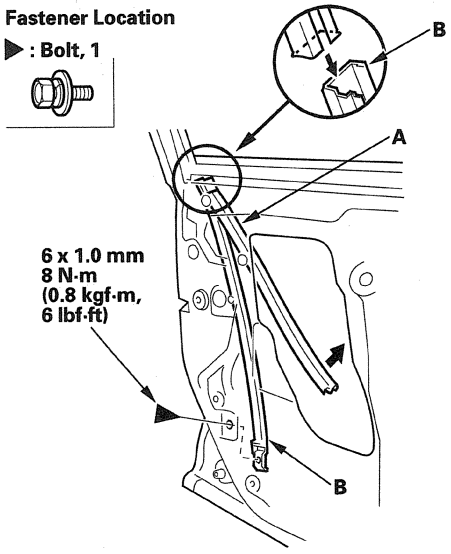

6. Remove the access cap (A). Using a clip remover, disconnect the outer handle rod (B) from the outer handle.

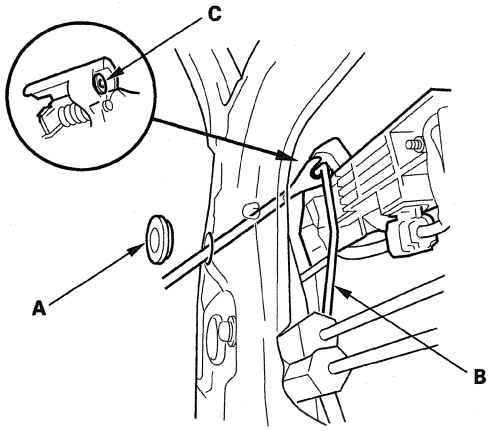

7. Replace the bushing (C) with a new one on the outer handle.

   NOTE: Do not reuse the bushing when you disconnect the outer handle rod.

8. Driver's door: While holding the flange portion (A) of the outer casing cover (B), pull out the retainer (C), and pull the lock cylinder cable (D) away from the latch actuator (E).

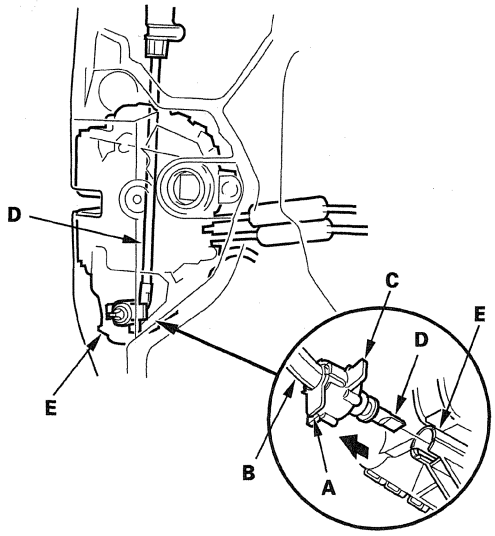

9. While holding the outer handle cover (A) from out side of the door, loosen the bolt, and then release the hooks (B) of the outer handle cover, then remove the cover and the lock cylinder (C) (driver's door) or the outer handle holder (passenger's door) from the outer handle base (D).

Fastener Location

▶ : Bolt, 1

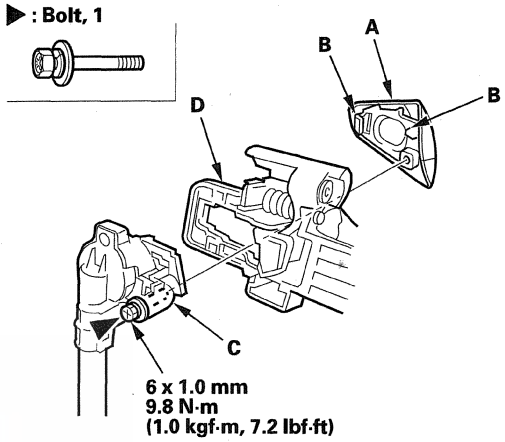

10. Driver's door: If the retainer (A) of the lock cylinder cable (B) is damaged, release the hooks (C), then replace it.

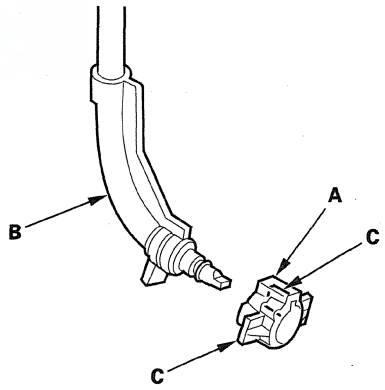

(cont'd)

Front Door Outer Handle Replacement (cont'd)

11. Disconnect the outer handle light connector (A).

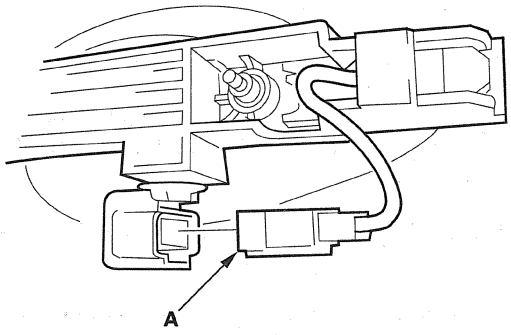

12. Pull the outer handle (A) out, and back as shown to remove it from the door. Take care not to scratch the door.

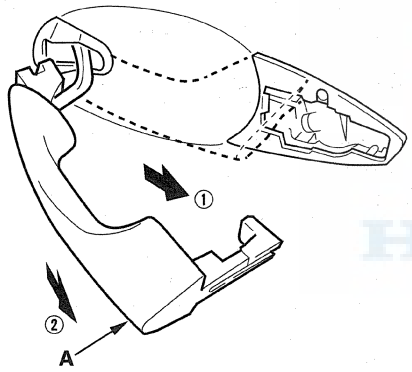

13. Release the hooks (A, B, C), then remove the outer handle front seal (D) and the outer handle rear seal (E).

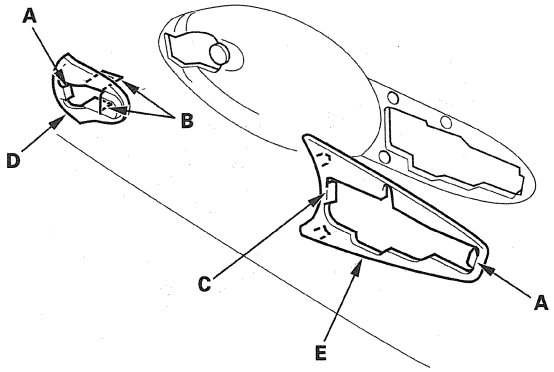

14. Remove the outer handle base (A).

-1 Remove the nut.
-2 Release the tab (B), and slide the outer handle base forward to release the special bolt (C) from the door panel.
-3 Detach the connector clip (D) and the harness clip (E) from the outer handle base.

Fastener Location

●: Nut, 1

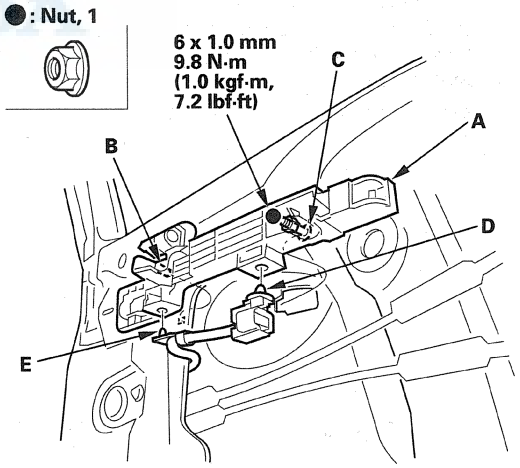

15. Remove the joint bushing (A) from the outer handle (B), then replace it with a new one.

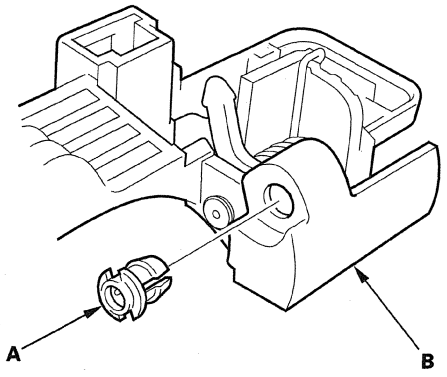

16. Install the handle in the reverse order of removal, and note these items:

- Reinstall the lock cylinder (driver's door) or the outer handle holder (passenger's door) before installing the outer handle cover.
- Make sure the outer handle light connector is plugged in properly, and the outer handle rod and the lock cylinder cable (driver's door) are connected securely.
- Make sure the door lock cylinder/door locks operate properly (driver's door).
- Make sure the door handle works properly.
- When reinstalling the door panel, make sure the plastic cover is installed properly and sealed around its outside perimeter to seal out water.

Front Door Latch Replacement

NOTE: Put on gloves to protect your hands.

1. Raise the glass fully.
2. Remove the door panel (see page 20-9).
3. Disconnect the latch actuator connector, then remove the plastic cover as needed (see step 3 on page 20-12).
4. Remove the door pull pocket bracket (see step 4 on page 20-12).
5. Remove the center lower channel (see step 5 on page 20-12).
6. Disconnect the outer handle rod (see step 6 on page 20-13).
7. Driver's door: Disconnect the lock cylinder cable from the latch (see step 8 on page 20-13).
8. Remove the latch (A).
   1. Disconnect the connector (B).
   2. Remove the screws (C, D).
   3. Detach the harness clip (E) to release the wire harness from the door.
   4. Pass the lock cable (F) and the inner handle cable (G) through the space between the door and the wire harness, then remove the latch through the hole in the door. Take care not to kink the cables.

Fastener Locations

C ▶ : Screw, 3 D ▶ : Screw, 1

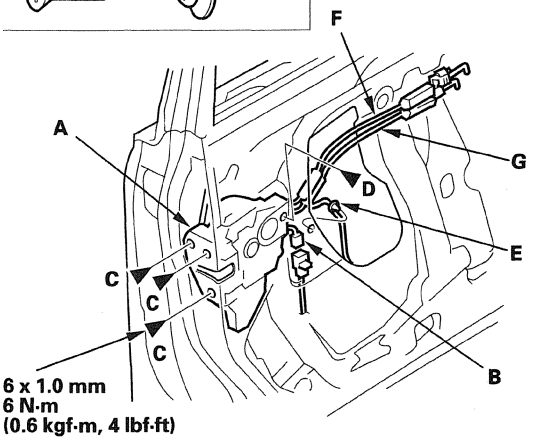

(cont'd)

Front Door Latch Replacement (cont'd)

9. Remove the screw, and remove the latch protector (A), then disconnect the latch cable (B) and the inner handle cable (C).

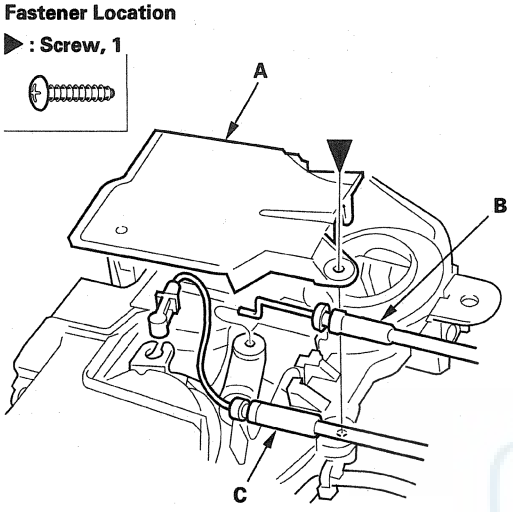

10. Install the latch in the reverse order of removal, and note these items:

- Make sure the actuator connector is plugged in properly, and the outer handle rod and the lock cylinder cable are connected securely.
- Replace the outer handle rod bushing with a new one (see step 7 on page 20-13).
- Make sure the door locks and opens properly.
- When reinstalling the door panel, make sure the plastic cover is installed properly and sealed around its outside perimeter to prevent water leaks.

Front Door Glass and Regulator Replacement

NOTE: Put on gloves to protect your hands.

1. Remove these items:

- Door panel (see page 20-9)
- Plastic cover (see step 3 on page 20-12)
- Door sash outer trim (see page 20-19)
- Remove the door pull pocket bracket (see step 4 on page 20-12)

2. Carefully raise the glass (A) until you can see the bolts through the oval holes in the door, then remove them. Carefully pull the glass out through the window slot. Take care not to drop the glass inside the door.

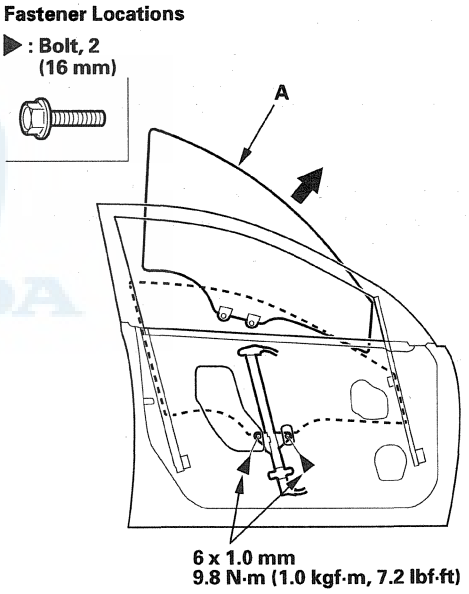

3. Disconnect the connector (A) from the regulator (B).

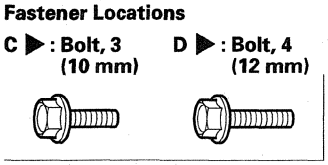

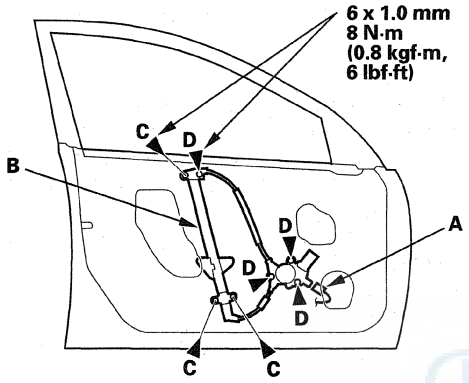

4. Remove the bolts (C), and loosen the bolts (D), then remove the regulator through the hole in the door.

5. Apply multipurpose grease to all the sliding surfaces of the regulator (A) where shown.

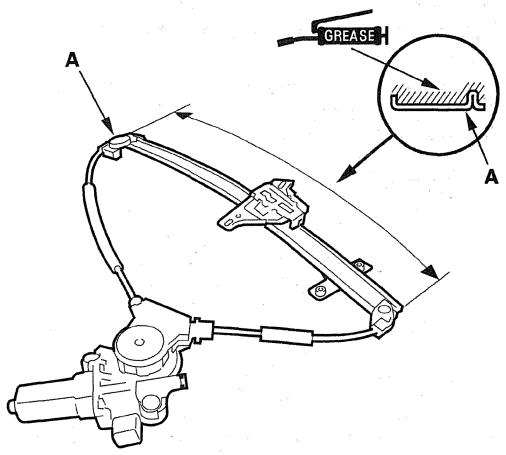

6. Install the glass and the regulator in the reverse order of removal, and note these items:

- Roll the glass up and down to make sure it moves freely without binding.
- Make sure that there is no clearance between the glass and glass run channel when the glass is closed.
- Adjust the position of the glass as necessary (see page 20-34).
- Check for water leaks (see step 8 on page 20-34).
- Test-drive and check for wind noise and rattles.
- When reinstalling the door panel, make sure the plastic cover is installed properly and sealed around its outside perimeter to prevent water leaks.
- Make sure the power door locks, windows, and the power mirror operate properly.
- Do the power window control unit reset procedure (see page 22-331).

Front Door Sash Inner Trim Replacement

NOTE: Take care not to scratch the door and related parts.

1. Remove the door panel (see page 20-9).
2. Disconnect the tweeter connector (A), and then detach it from the door.

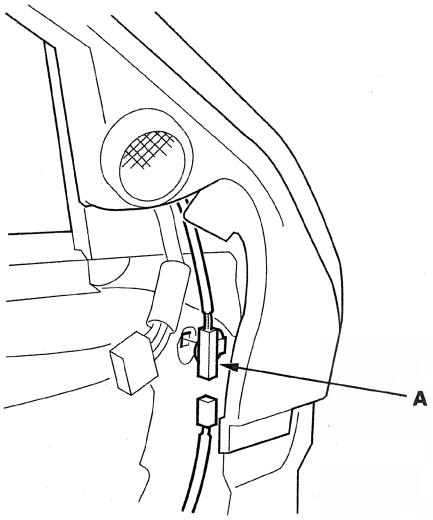

3. Lower the glass fully.
4. Using a clip remover, detach the clips (A, B) fastening the front door sash inner trim (C).

Fastener Locations

A ▷: Clip, 2 (Light Yellow) **B ▷: Clip, 1 (Blue)**

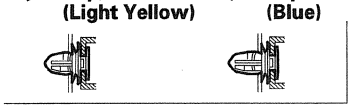

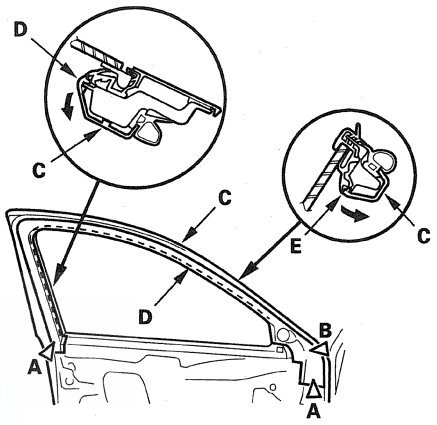

5. Pull the door glass opening side of the trim back to release the hooks (D, E) from the door glass opening flange of the door sash.
6. Install the trim in the reverse order of removal, and note these items:

- If the clips are damaged or stress-whitened, replace them with new ones.
- Push the hooks and the clips into place securely.

Front Door Sash Outer Trim Replacement

NOTE: Take care not to scratch the door and related parts.

1. Lower the glass fully.
2. Remove the door sash outer trim (A).
   1 Pull back the door weatherstrip (B), then remove the upper screw (C).
   2 Pull back the door weatherstrip, then loosen the middle and bottom screws (D, E).
   3 Lower the trim, and then release the middle and bottom screws from the holes (F) in the door.
   4 Pull the trim up to release the hook (G) from the door. Take care not to damage the door glass outer weatherstrip (H).

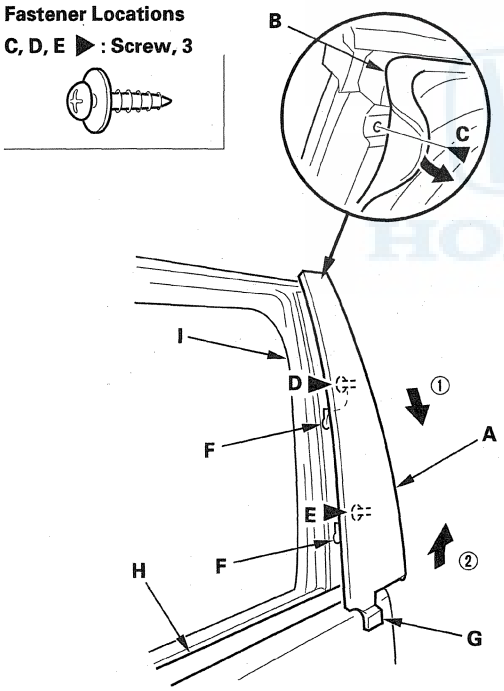

3. Install the trim in the reverse order of removal, and make sure the glass run channel (I) is installed in the door sash securely.

Front Door Glass Outer Weatherstrip Replacement

NOTE:
- Put on gloves to protect your hands.
- The door glass outer weatherstrip will need replacement because it will bend during removal.
- Take care not to scratch the door and related parts.

1. Remove these items:
   - Door panel (see page 20-9)
   - Door glass inner weatherstrip (see step 7 on page 20-10)
   - Door sash inner trim (see page 20-18)
   - Power mirror (see page 20-38)
2. Starting at the front, pull the door glass outer weatherstrip (A) up at each portion where the inner molding (B) catches the inside edge of the window slot, and then detach the rear clip (C), then remove the weatherstrip.

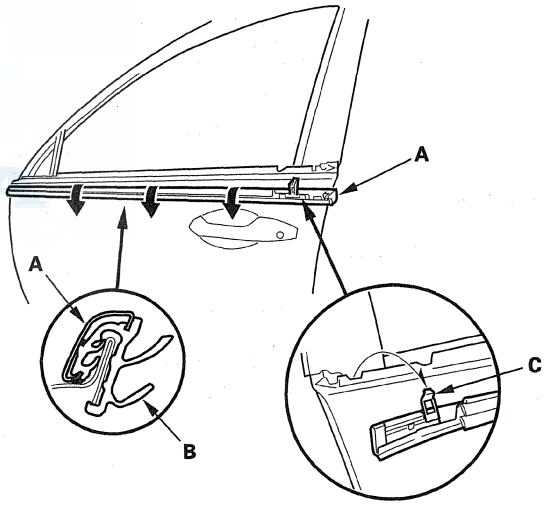

3. Install a new weatherstrip in the reverse order of removal, and push it into place securely.

Front Door Subseal Replacement

NOTE:
- Put on gloves to protect your hands.
- Take care not to scratch the door and related parts.
- Use a clip remover to remove the clips.

1. Detach the clips (A, B), then remove the lower subseal (C).

Fastener Locations

A ▷: Clip, 9 (Orange) **B ▷: Clip, 1 (Black)**

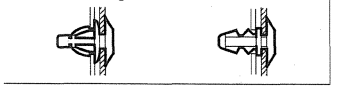

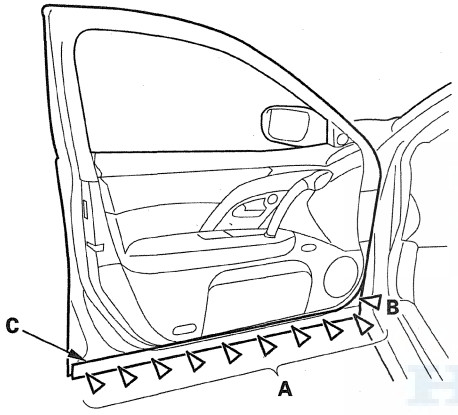

2. Remove these items:
   - Door panel (see page 20-9)
   - Door sash inner trim (see page 20-18)
   - Power mirror (see page 20-38)
   - Door sash outer trim (see page 20-19)

3. Detach the clips, then remove the upper subseal (A) from the front edge of the door.

Fastener Locations

▷: Clip, 4

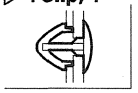

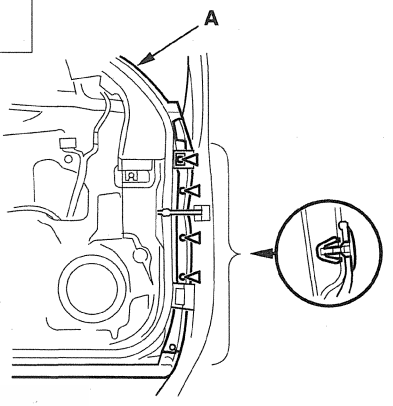

4. Pull the upper subseal (A) away from the upper portion of the door sash flange (B), then remove the subseal.

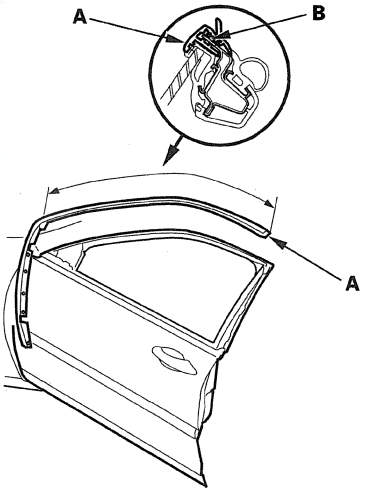

5. Install the subseal in the reverse order of removal, and these items:
   - If the clips are damaged or stress-whitened, replace them with new ones.
   - Make sure the subseal is installed in the door flange securely.
   - Push the clips into place securely.

Front Door Weatherstrip Replacement

NOTE:
- Put on gloves to protect your hands.
- Take care not to scratch the door and related parts.
- Use a clip remover to remove the clips.

1. At the A-pillar, remove the door checker bracket cover (A), then remove the door checker mounting bolt (B).

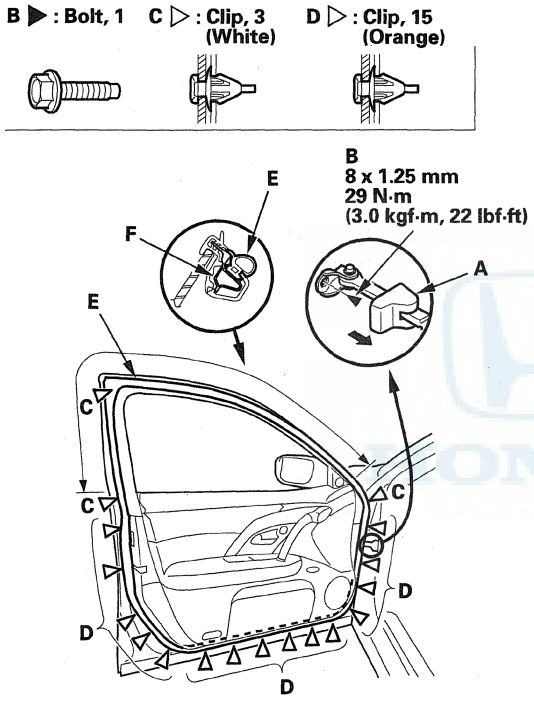

2. Detach the clips (C, D), then remove the door weatherstrip (E).

3. Install the weatherstrip in the reverse order of removal, and note these items:

   - If the clips are damaged or stress-whitened, replace them with new ones.
   - Make sure the weatherstrip is installed in the holder (F) securely.
   - Apply liquid thread lock to the door checker mounting bolt before installation.
   - Check for water leaks (see step 8 on page 20-34).

Rear Door Panel Removal/ Installation

Special Tools Required
- KTC trim tool set SOJATP2014 *
- Trim pad remover, Snap-on A 177A or equivalent, commercially available

* Available through the Acura Tool and Equipment Program; 888-424-6857

NOTE:
- Take care not to scratch the door and related parts.
- Use the appropriate tool from the KTC trim tool set to avoid damage when removing components.

1. Using a trim tool, push on the bottom hook (A) and pivot the cover (B) on the upper hook (C), then detach the front hook (D), and then remove the cover and the screws securing the inner handle (E).

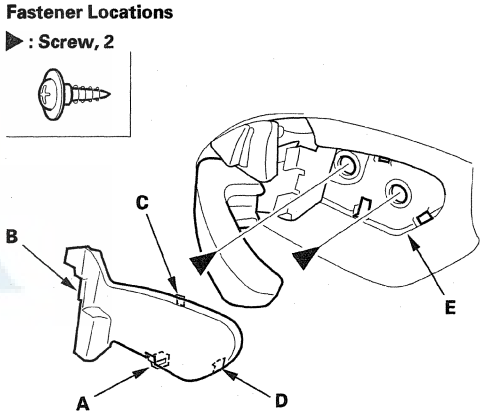

2. Using a trim tool, pull up the rubber mat (A), then remove the screw.

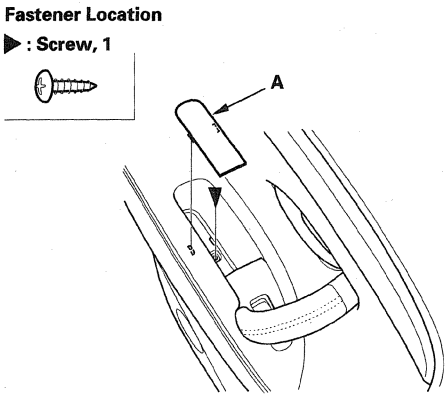

(cont'd)

Rear Door Panel Removal/Installation (cont'd)

3. Release the clips that hold the door panel (A) with a commercially available trim pad remover (B).

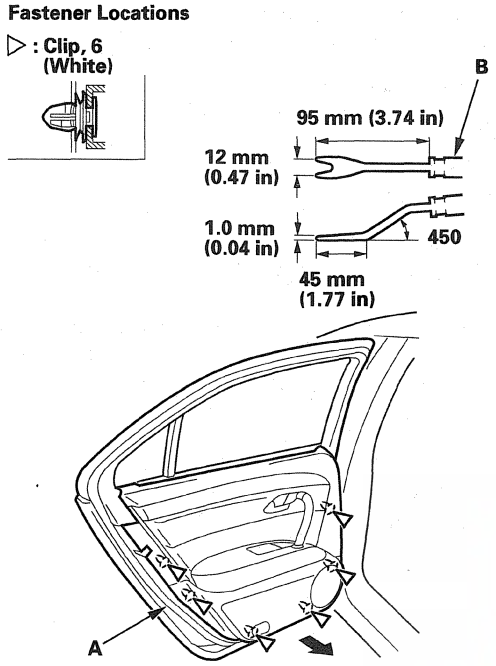

4. Remove the door panel (A) with as little bending as possible to avoid creasing or breaking it.

-1 While holding the door panel, pull the panel upward to release it from the upper clips (B, C).
-2 While holding the door panel away from the door, disconnect the door subharness connector (D) and the power window switch connector (E).
-3 While holding the door panel away from the door, remove the screws (F), then remove the inner handle (G) from the door panel.

NOTE: The inner handle cable (H) and the lock cable (I) are connected to the inner handle. Do not pull the door panel up too far, or the inner handle cable will be damaged.

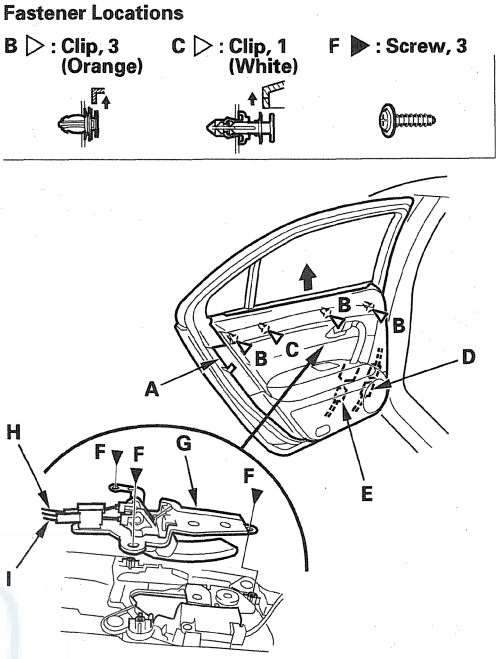

5. Remove the remaining clips from the door.

-1 Using a clip remover, remove the clips (A).
-2 Put on gloves to protect your hands. Using a knife, cut the boss (B) of the clip (C).
-3 Push the clip, and then pull it away.

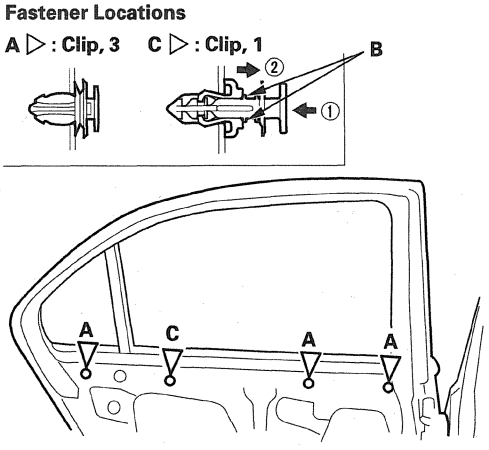

6. Replace all of the door panel clips with new ones.

7. If necessary, remove the door glass inner weatherstrip (A) from the door by pulling it up.

   NOTE: If you are only removing the door panel, go to step 11. If you are doing further disassembly, proceed to step 8.

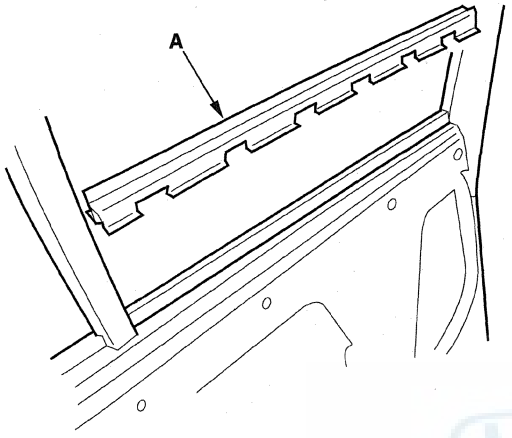

Inner handle removal

8. If necessary, remove the cable fastener (A) from the inner handle (B), and then disconnect the lock cable (C) from the joint bushing (D). Disconnect the inner handle cable (E) from the joint bushing (F), then remove the inner handle.

   NOTE: If the joint bushings are damaged or stress-whitened, replace them with new ones.

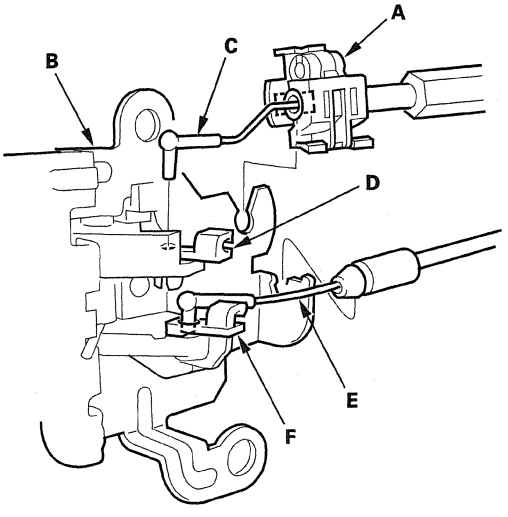

Armrest assembly/grip assembly removal

9. If necessary, remove the screws (A, B), then remove the armrest/grip assembly (C), and the wood trim (D) from the door panel (E).

Fastener Locations

A ▶ : Screw, 11 B ▶ : Screw, 7

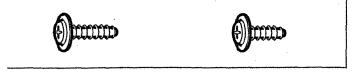

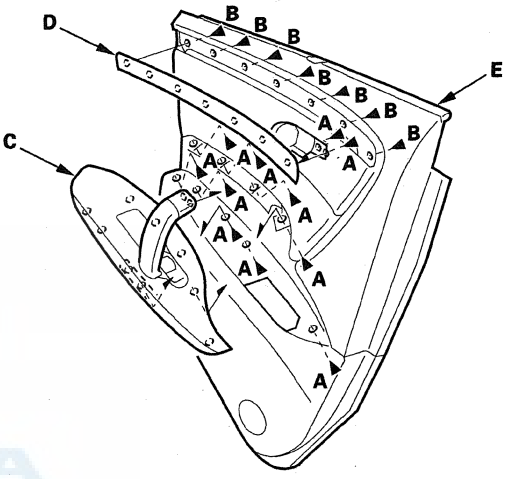

(cont'd)

Rear Door Panel Removal/ Installation (cont'd)

10. If necessary, remove the screws (A, B), then separate the door grip (C), the armrest (D), the power window switch panel (E), the grip bracket (F), the pull pocket (G), and the power window switch (H).

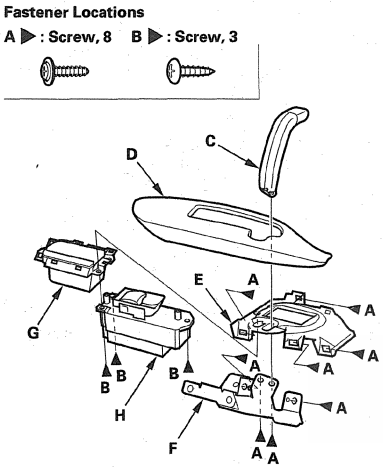

11. Install the door panel in the reverse order of removal, and note these items:

- If the clips are damaged or stress-whitened, replace them with new ones.
- Replace any damaged cable fasteners with new ones.
- Before reinstalling the door panel, install the clips.
- When reinstalling the door panel, make sure the plastic cover is installed properly and sealed around its outside perimeter to seal out water.
- The latch cable (A) should be fixed to the cable fastener (B) with the latch in lock position as shown.
- Make sure the connector is plugged in properly, and the cable is connected securely.
- Make sure the window and power door lock operate properly.

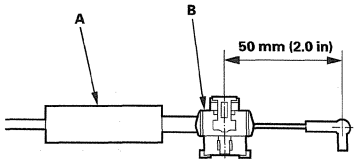

Rear Door Outer Handle Replacement

NOTE: Put on gloves to protect your hands.

1. Remove these items:

- Door panel (see page 20-21)
- Door glass inner weatherstrip (see step 7 on page 20-23)
- Plastic cover (see step 2 on page 20-27)
- Glass (see page 20-27)

2. Disconnect the connector (A), and remove the screws (B, C), then lower the latch (D).

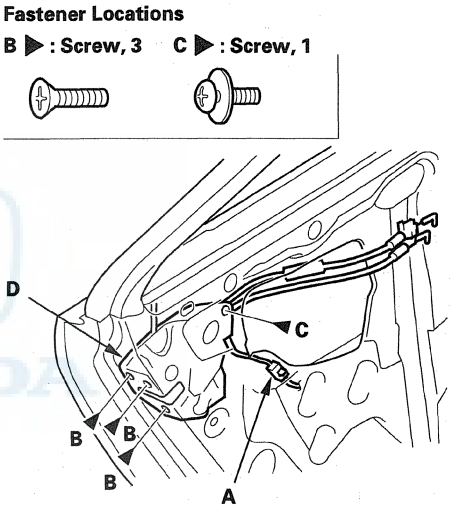

3. Remove the access seal (A). Using a clip remover, disconnect the outer handle rod (B) from the outer handle.

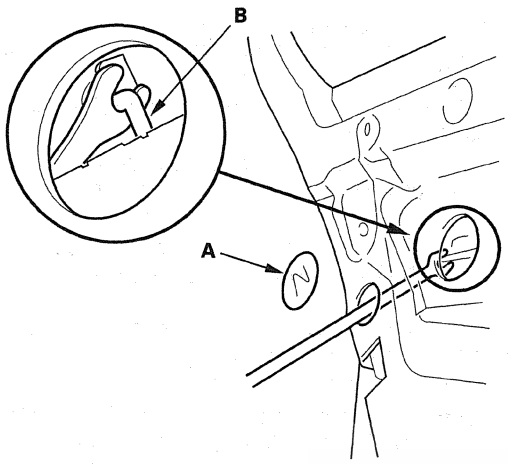

4. Replace the bushing (A) with a new one on the outer handle.

   NOTE: Do not reuse the bushing when you disconnect the outer handle rod.

Fastener Location
▶ : Bolt, 1

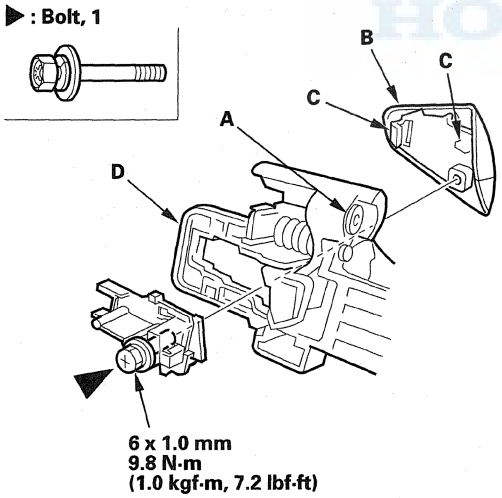

5. While holding the outer handle cover (B) from outside of the door, loosen the bolt, and then release the hooks (C) of the outer handle cover, then remove the cover and the outer handle holder from the outer handle base (D).

6. Pull the outer handle (A) out, and back as shown to remove it from the door. Take care not to scratch the door.

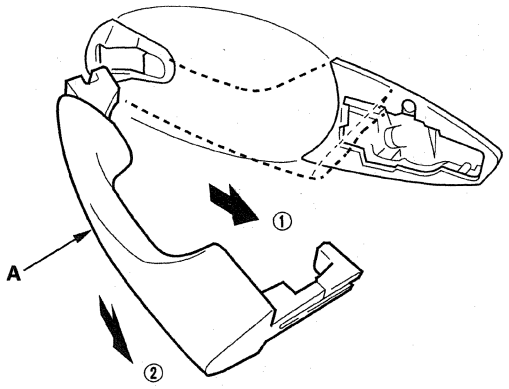

7. Release the hooks (A, B, C), then remove the outer handle front seal (D) and the outer handle rear seal (E).

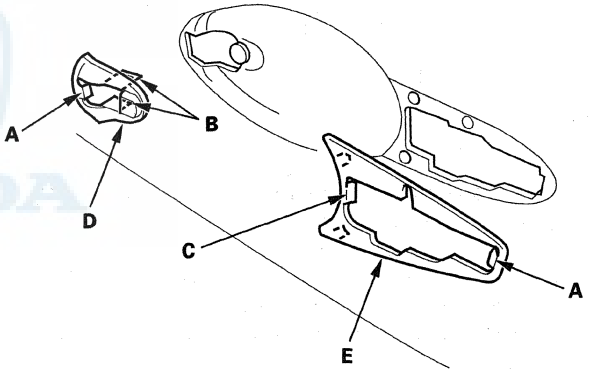

(cont'd)

Rear Door Outer Handle Replacement (cont'd)

8. Remove the outer handle base (A).

   -1 Remove the nut.
   -2 Release the tab (B), and slide the outer handle base forward to release the special bolt (C) from the door panel.

Fastener Location

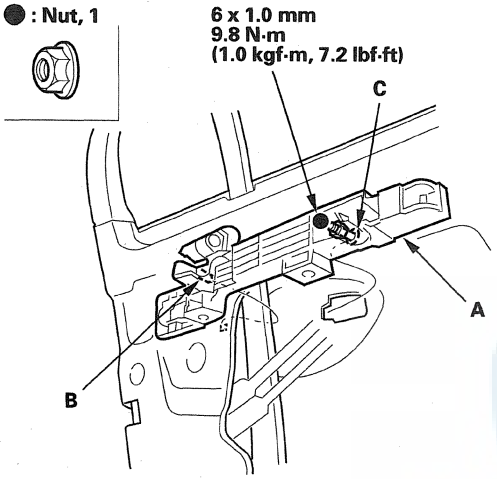

9. Install the handle in the reverse order of removal, and note these items:

   - Reinstall the outer handle holder before installing the outer handle cover.
   - Make sure the outer handle rod is connected securely.
   - Make sure the door lock operates properly.
   - Make sure the door handle works properly.
   - When reinstalling the door panel, make sure the plastic cover is installed properly and sealed around its outside perimeter to prevent water leaks.

Rear Door Latch Replacement

NOTE: Put on gloves to protect your hands.

1. Remove these items:

   - Door panel (see page 20-21)
   - Door glass inner weatherstrip (see step 7 on page 20-23)
   - Plastic cover (see step 2 on page 20-27)
   - Glass (see page 20-27)

2. Disconnect the outer handle rod (see step 3 on page 20-25)

3. Remove the latch (A).

   -1 Remove the screws (B, C) securing the latch, then lower the latch.
   -2 Remove the access seal (D).
   -3 Using a clip remover, disconnect the outer handle rod (E) from the outer handle.
   -4 Disconnect the connector (F).
   -5 Remove the latch through the hole in the door. Take care not to kink the lock cable (G) and inner handle cable (H).

Fastener Locations

B ▶ : Screw, 3 C ▶ : Screw, 1

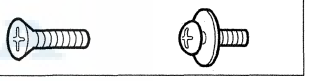

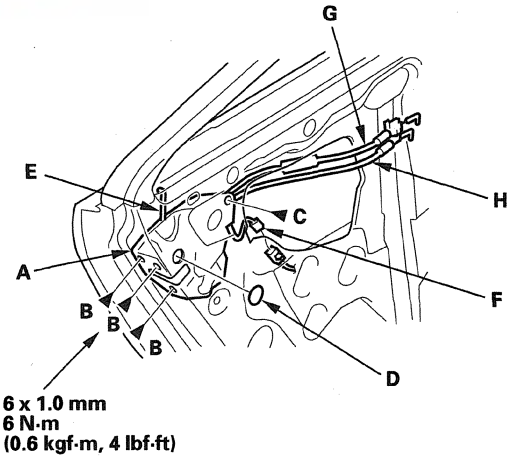

4. Remove the screw, and remove the latch protector (A), then disconnect the latch cable (B) and the inner handle cable (C).

Fastener Location

▶ : Screw, 1

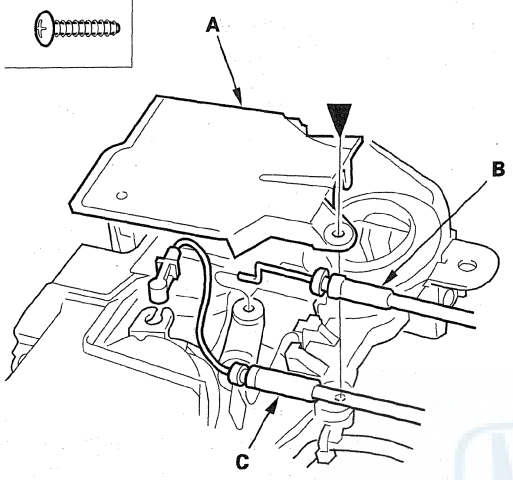

5. Install the latch in the reverse order of removal, and note these items:

- Make sure the actuator connector is plugged in properly, and the outer handle rod is connected securely.
- Replace the outer handle rod bushing with a new one (see step 4 on page 20-25).
- Make sure the door locks and opens properly.
- When reinstalling the door panel, make sure the plastic cover is installed properly and sealed around its outside perimeter to prevent water leaks.

Rear Door Glass, Quarter Glass, and Regulator Replacement

NOTE: Put on gloves to protect your hands.

1. Remove these items:

- Door panel (see page 20-21)
- Door glass inner weatherstrip (see step 7 on page 20-23)
- Door sash outer trim (see page 20-31)

2. Remove the screws, then remove the door pull pocket bracket (A). Disconnect the latch actuator connector (B), and remove the cap (C), and then remove the plastic cover (D).

Fastener Locations

▶ : Screw, 2

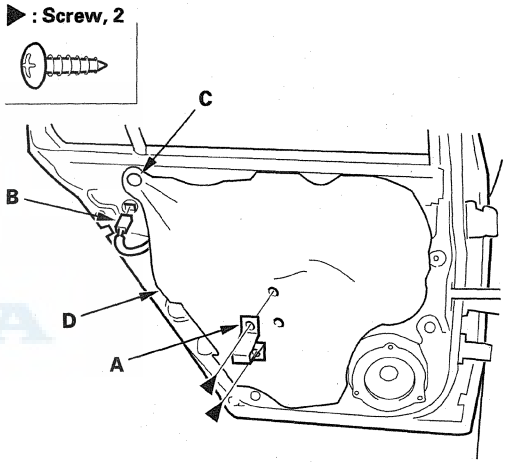

(cont'd)

Rear Door Glass, Quarter Glass, and Regulator Replacement (cont'd)

3. Carefully move the glass (A) until you can see the bolts through the oval holes in the door, then remove them.

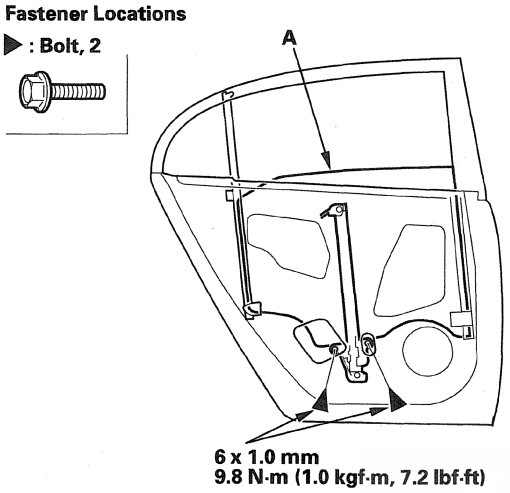

4. Pull the glass run channel (A) away as needed, then remove the screw (B). Remove the bolts (C, D) securing the center channel (E), then remove the collar (F).

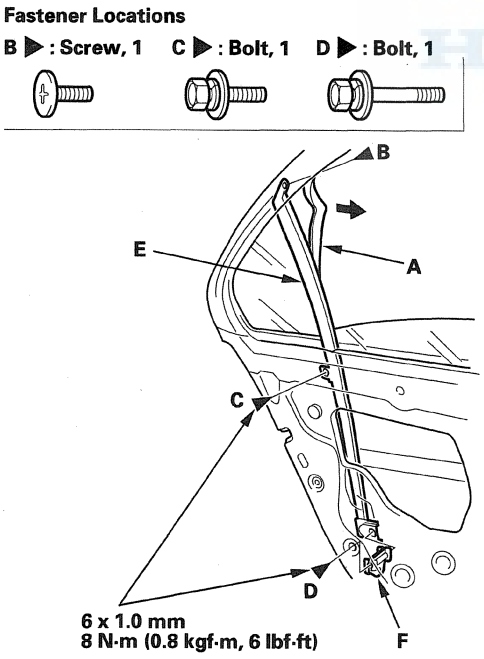

5. Pull the upper portion of the center channel (A) forward to remove it from the door quarter glass seal (B).

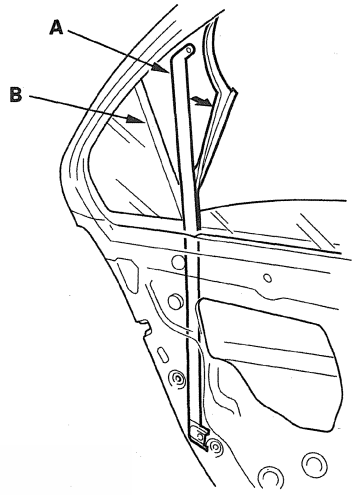

6. Pull the door weatherstrip (A), and remove the screw, then remove the quarter glass (B). Take care not to damage the outer weatherstrip (C).

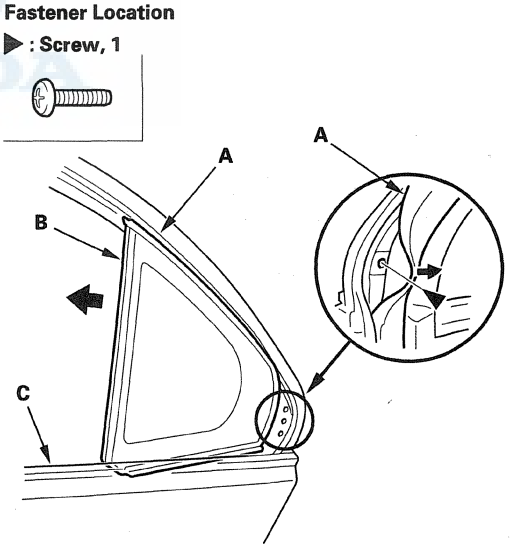

7. Carefully remove the glass (A) through the window slot. Take care not to drop the glass inside the door.

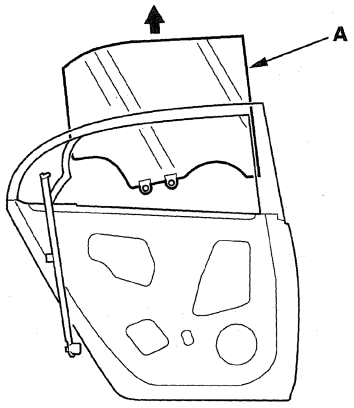

8. Disconnect the connector (A) from the regulator (B).

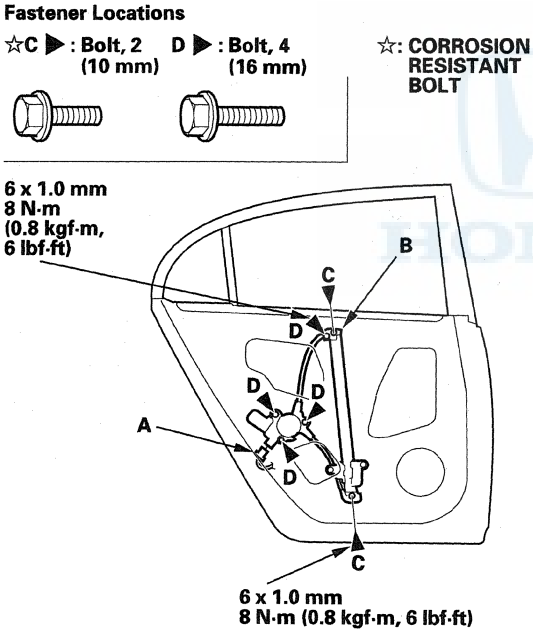

9. Remove the bolts (C), and loosen the bolts (D), then remove the regulator through the hole in the door.

10. Apply multipurpose grease to all the sliding surfaces of the regulator (A) where shown.

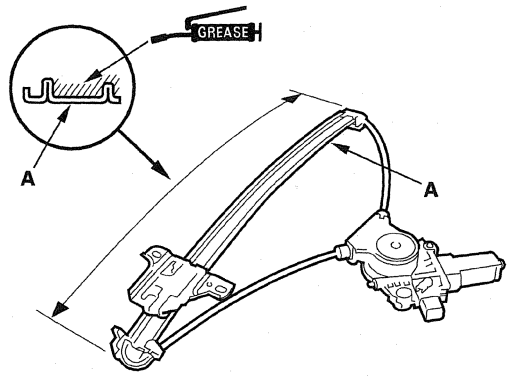

11. Install the glass and regulator in the reverse order of removal, and note these items:

- Special corrosion-resistant bolts are used in this area. The use of any other type of hardware may result in accelerated corrosion.
- Roll the glass up and down to make sure it moves freely without binding.
- Make sure that there is no clearance between the glass and the glass run channel when the glass is closed.
- Adjust the position of the glass as necessary (see page 20-34).
- Do the power window control unit reset procedure (see page 22-331).
- Check for water leaks (see step 8 on page 20-34).
- Test-drive and check for wind noise and rattles.
- When reinstalling the door panel, make sure the plastic cover is installed properly and sealed around its outside perimeter to prevent water leaks.

Rear Door Sash Inner Trim Replacement

Special Tools Required
KTC trim tool set SOJATP2014 *
* Available through the Acura Tool and Equipment Program; 888-424-6857

NOTE:
- Use the appropriate tool from the KTC trim tool set to avoid damage when removing components.
- Take care not to scratch the door and related parts.

1. Remove the door panel (see page 20-21).
2. Lower the glass fully.
3. Using a trim tool, pry the caps (A), and remove the screws, then remove the rear side sunshade hooks (B).

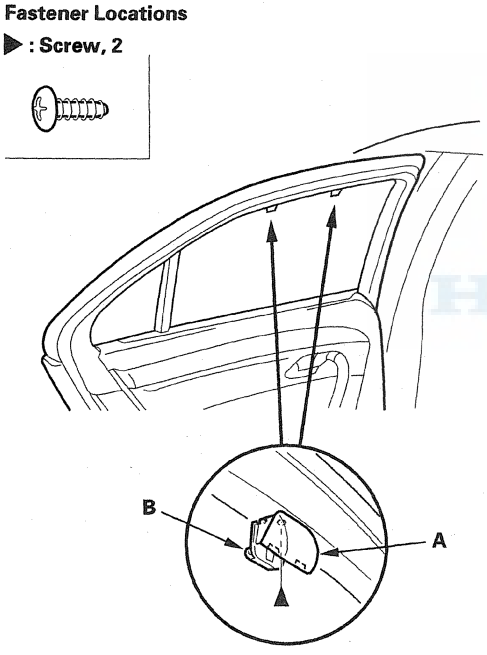

4. Using a clip remover, detach the clips fastening the front door sash inner trim (A).

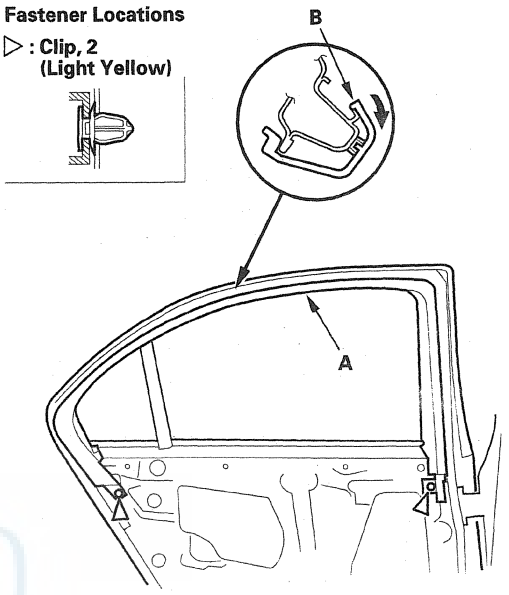

5. Pull the door glass opening side of the trim back to release the hooks (B) from the door glass opening flange of the door sash.
6. Install the trim in the reverse order of removal, and note these items:
   - If the clips are damaged or stress-whitened, replace them with new ones.
   - Push the hooks and clips into place securely.

Rear Door Sash Outer Trim Replacement

NOTE: Take care not to scratch the door.

1. Lower the glass fully.

2. Remove the door sash outer trim (A).

   -1 Pull back the door weatherstrip (B), then remove the upper screw (C).
   -2 Pull back the door weatherstrip, then loosen the middle and bottom screws (D, E).
   -3 Lower the trim, and then release the middle and bottom screws from the holes (F) in the door.
   -4 Pull the trim up to release the hook (G) from the door. Take care not to damage the door glass outer weatherstrip (H).

Fastener Locations
C, D, E ▶ : Screw, 3

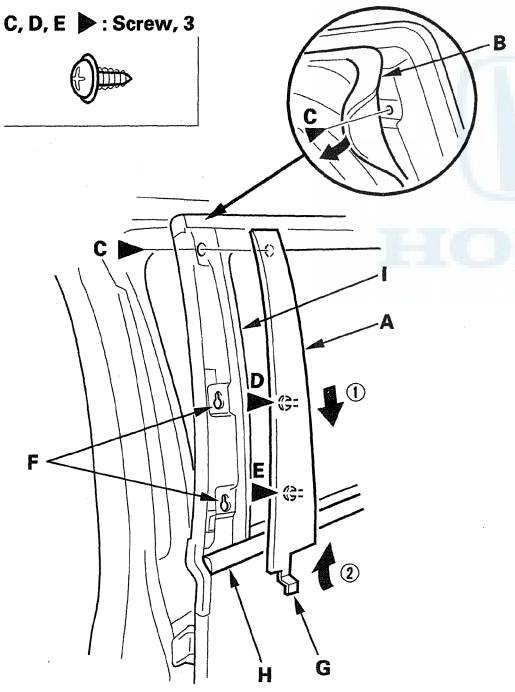

3. Install the trim in the reverse order of removal, and make sure the glass run channel (I) is installed in the door sash securely.

Rear Door Glass Outer Weatherstrip Replacement

NOTE:
- The door glass outer weatherstrip will need replacement because it will bend during removal.
- Put on gloves to protect your hands.
- Take care not to scratch the door and related parts.

1. Lower the glass fully.

2. Remove these items:

   - Door panel (see page 20-21)
   - Door glass inner weatherstrip (see step 7 on page 20-23)
   - Door sash outer trim (see page 20-31)

3. Starting at the front, detach the front clip (A), and pull the door glass outer weatherstrip (B) up at each portion where the inner molding (C) catches the inside edge of the window slot, and then detach the rear clip (D), then remove the weatherstrip.

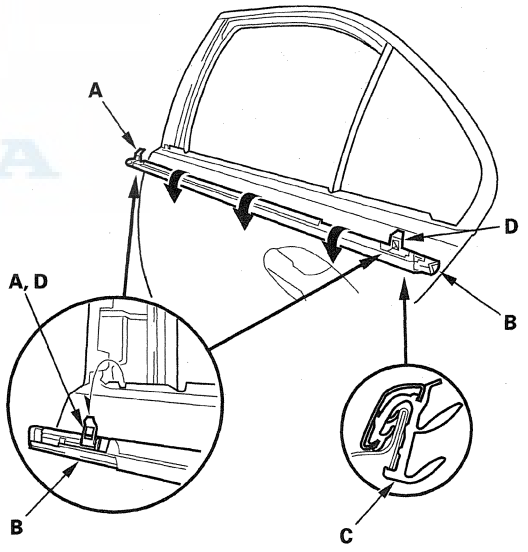

4. Install a new weatherstrip in the reverse order of removal, and push the weatherstrip into place securely.

HONDA

Rear Door Subseal Replacement

NOTE:
- Take care not to scratch the door.
- Use a clip remover to remove the clips.

1. Detach the clips (A, B), then remove the lower subseal (C).

Fastener Locations

A ▷: Clip, 11 (Orange) **B ▷: Clip, 2 (Black)**



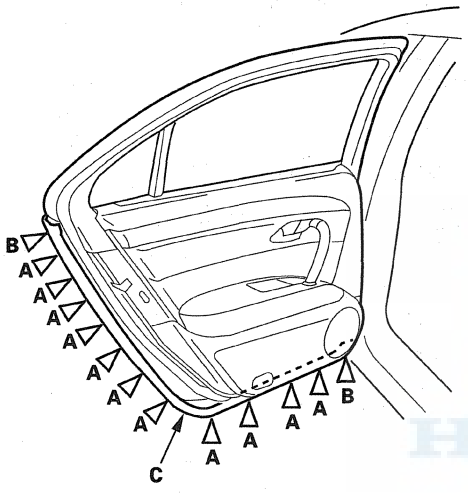

2. Remove these items:
   - Door panel (see page 20-21)
   - Door glass outer weatherstrip (see page 20-31)
   - Glass (see page 20-27)
   - Quarter glass (see page 20-27)

3. Detach the clips (A, B, C), then remove the upper subseal (D) from the front edge of the door.

Fastener Locations

A ▷: Clip, 7 (Black) **B ▷: Clip, 2** **C ▷: Clip, 1**

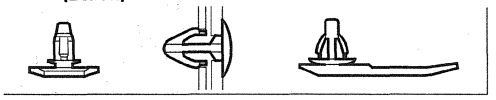

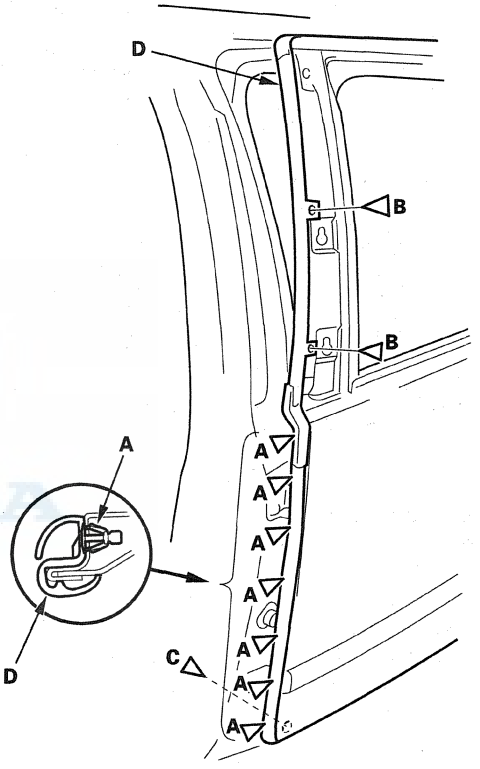

4. Pull the upper subseal (A) away from the roof portion of the door flange (B), then remove the subseal.

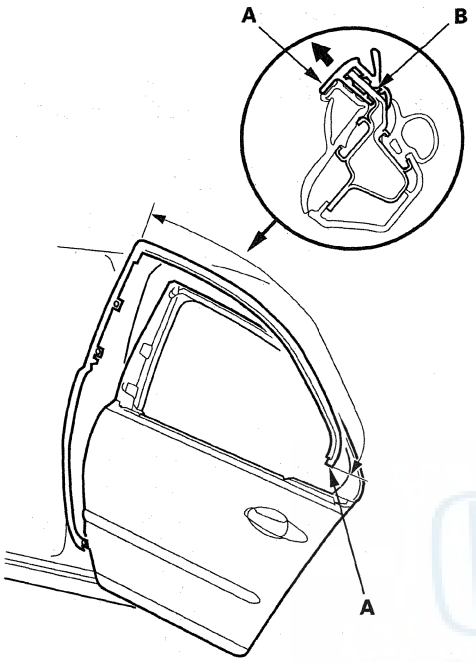

5. Install the subseal in the reverse order of removal, and note these items:

   - If the clips are damaged or stress-whitened, replace them with new ones.
   - Make sure the subseal is installed in the door flange securely.

Rear Door Weatherstrip Replacement

NOTE:
- Put on gloves to protect your hands.
- Take care not to scratch the door and related parts.
- Use a clip remover to remove the clips.

1. At the B-pillar, remove the door checker bracket cover (A), then remove the door checker mounting bolt (B).

Fastener Locations

B ▶ : Bolt, 1 C ▷ : Clip, 4 (White)

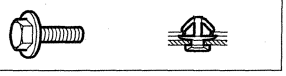

D ▷ : Clip, 13 (Left door : Orange) (Right door : Green)

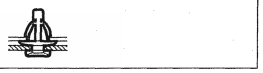

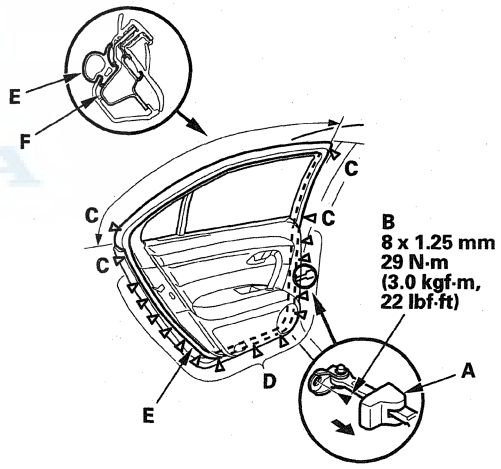

2. Detach the clips (C, D), then remove the door weatherstrip (E).

3. Install the weatherstrip in the reverse order of removal, and note these items:

   - If the clips are damaged or stress-whitened, replace them with new ones.
   - Make sure the weatherstrip is installed in the holder (F) securely.
   - Apply liquid thread lock to the door checker mounting bolt before installation.
   - Check for water leaks (see step 8 on page 20-34).

Front and Rear Door Glass Adjustment

NOTE:
- Check the weatherstrips and the glass run channel for damage or deterioration, and replace them if necessary.
- Wipe the run channel clean with a shop towel.
- Lubricate the run channel with Shin-Etsu silicone grease P/N 08798-9013.

1. Place the vehicle on a firm, level surface.

2. Remove these items:

   - Door panel:
     - Front door (see page 20-9)
     - Rear door (see page 20-21)
   - Plastic cover:
     - Front door (see step 3 on page 20-12)
     - Rear door (see step 2 on page 20-27)

3. Carefully move the glass (A) until you can see the glass mounting bolts (B), then loosen them.

Front door

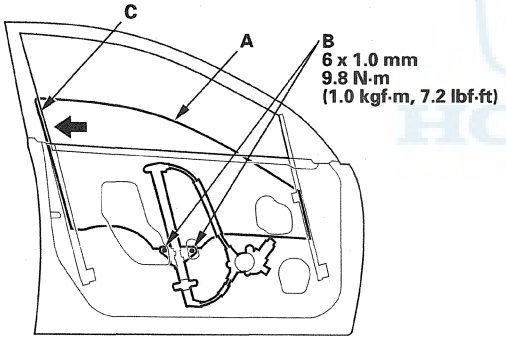

Rear door

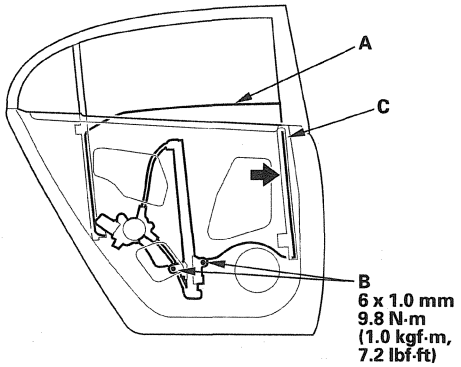

4. Push the glass against the channel (C), then tighten the glass mounting bolts.

5. Make sure that the glass moves smoothly.

6. Raise the glass fully, and check for gaps. Also make sure that the glass (A) contacts the glass run channel (B) evenly.

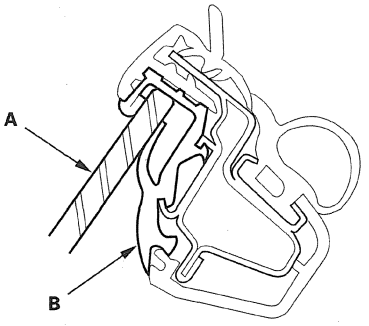

7. Attach the plastic cover making sure it is sealed around its outside perimeter to seal out water.

8. Check for water leaks. Run water over the roof and on the sealing area as shown, and note these items:

   - Use a 12 mm (1/2 in) diameter hose (A).
   - Adjust the rate of water flow as shown (B).
   - Do not use a nozzle.
   - Hold the hose about 300 mm (12 in) away from the door (C).

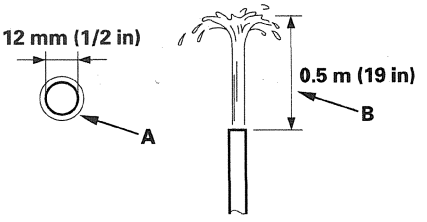

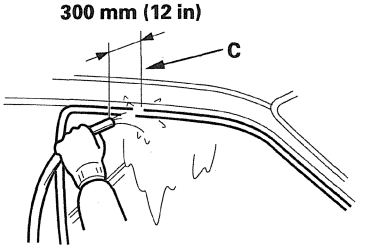

9. Reinstall the door panel:

   - Front door (see step 12 on page 20-11)
   - Rear door (see step 11 on page 20-24)

Front and Rear Door Position Adjustment

SRS components are located in the B-pillar bottom area. Review the SRS component locations (see page 24-12) and the precautions and procedures (see page 24-14) before doing repairs or service.

NOTE: Check for a flush fit with the body, then check for equal gaps between the front, rear, and bottom door edges and the body. Check that the door and body edges are parallel.

1. Place the vehicle on a firm, level surface when adjusting the doors.

2. Adjust at the hinges (A):

   - Pad the floor jack (B) with shop towels (C), then use the jack to support the door to prevent damage to the door while adjusting it.
   - On the front door: Remove the front inner fender (see page 20-176) and the front fender fairing (see page 20-178). Loosen the hinge mounting bolts (D) slightly, and move the door backward or forward.
   - On the rear door: Remove the B-pillar lower trim (see page 20-72) and remove the front seat belt and the retractor (see page 24-4), and the plug seal from the body. Loosen the hinge mounting nuts (E) slightly, and move the door backward or forward, up or down as necessary to equalize the gaps.

Front door

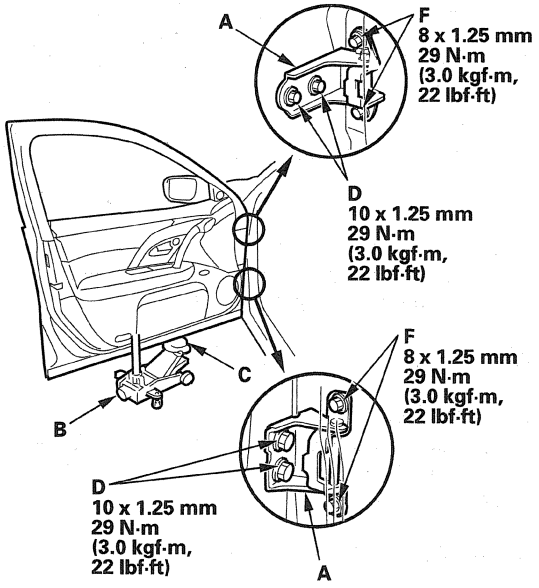

Rear door

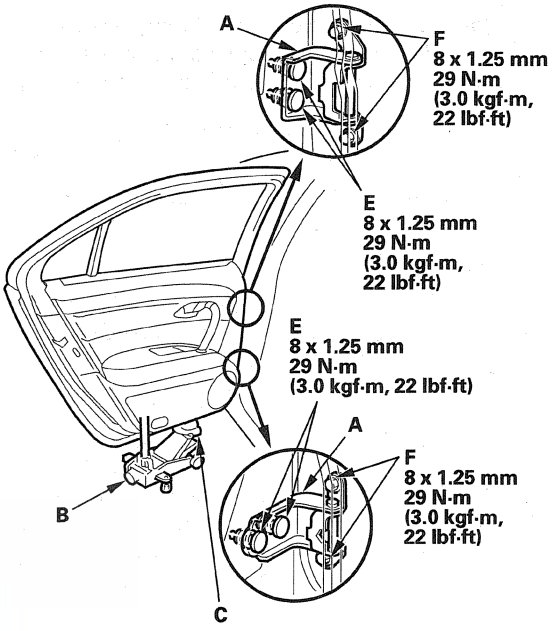

3. If necessary, replace the door mounting bolts with the adjusting bolts made specifically for door adjustment, then adjust at the door: Loosen the door mounting bolts (F) slightly, and move the door up or down as necessary to equalize the gaps, and move it in or out until it's flush with the body.

   NOTE: Refer to the Parts Catalog if you need to use an adjusting bolt.

(cont'd)

Front and Rear Door Position Adjustment (cont'd)

4. Make sure that the door and body edges are parallel. If necessary, adjust the door cushion (A) to make the rear of the doors flush with the body.

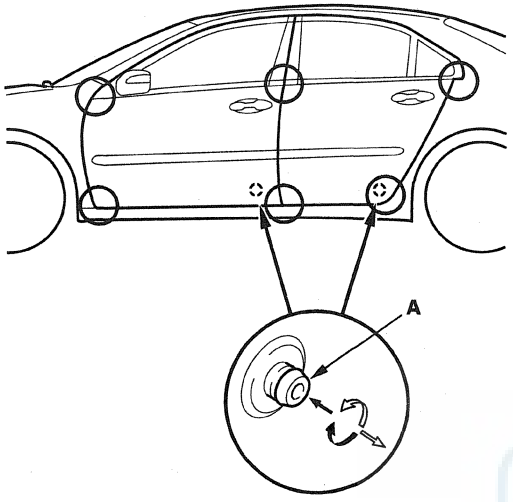

5. Apply touch-up paint to the hinge mounting bolts, and around the hinges.

6. Check for water leaks (see step 8 on page 20-34).

Front and Rear Door Striker Adjustment

Make sure the door latches securely without slamming it. If necessary, adjust the striker (A). The striker nuts are fixed, but the striker can be adjusted slightly up or down, and in or out.

1. Release the hooks (B), then remove the striker trim (C).

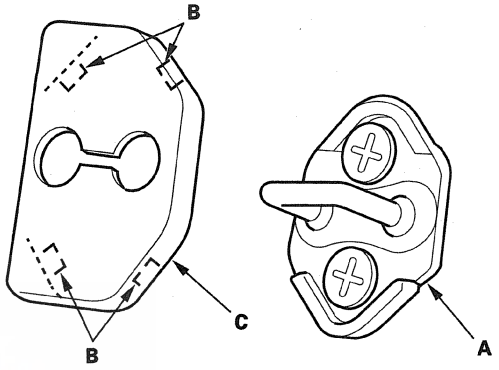

2. Loosen but do not remove the screws (A).

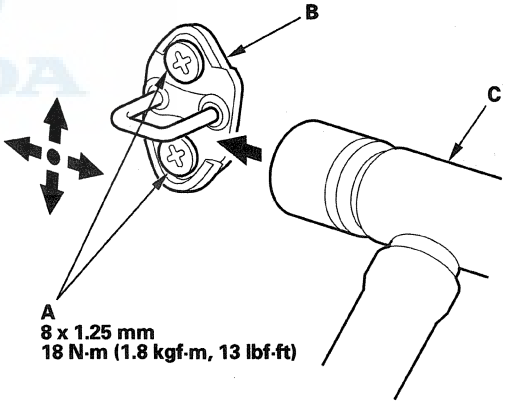

3. Wrap the striker (B) with a shop towel, then adjust the striker by tapping it with a plastic hammer (C). Do not hit the striker too hard.

4. Lightly tighten the screws.

5. Hold the outer handle out, and push the door against the body to be sure the striker allows a flush fit. If the door latches properly, tighten the screws, and recheck.

6. Install the striker trim.

Component Location Index

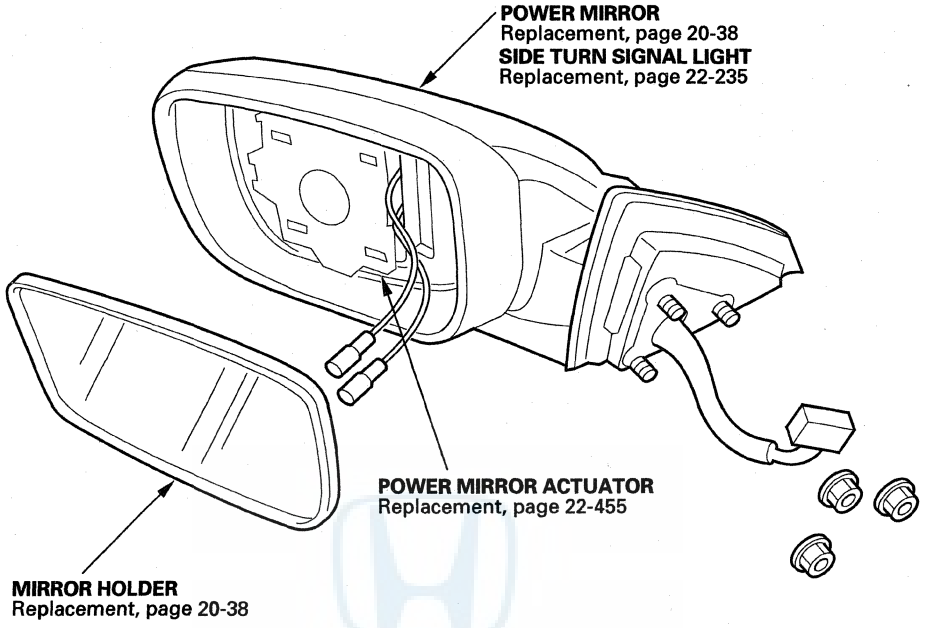

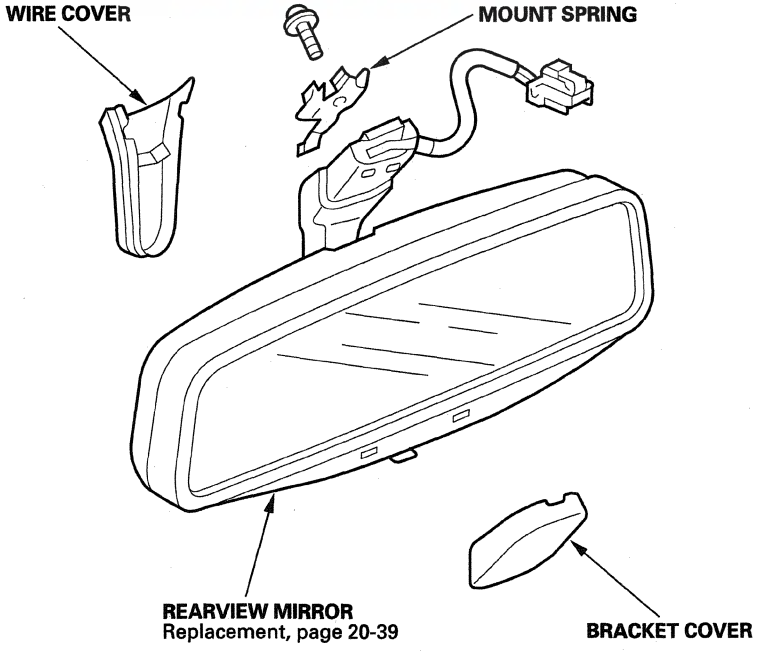

Power Mirror Replacement

NOTE:
- Put on gloves to protect your hands.
- Take care not to scratch the door and related parts.

1. Lower the door glass fully.
2. Remove these items:
   - Front door panel (see page 20-9)
   - Front door sash inner trim (see page 20-18)
3. While holding the mirror (A) , remove the nuts.

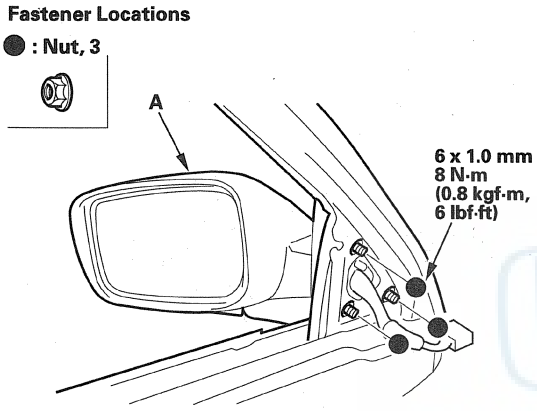

4. Remove the mirror (A). Take care not to scratch the door.

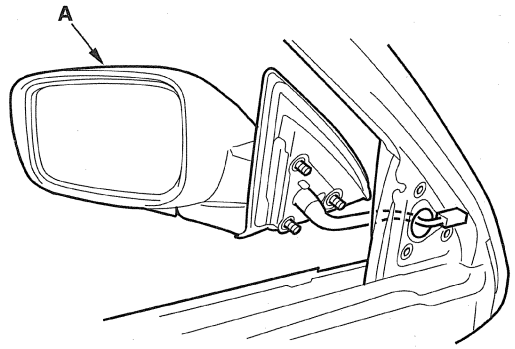

5. Install the mirror in the reverse order of removal, and note these items:
   - When reinstalling the door panel, make sure the plastic cover is installed properly and sealed around its outside perimeter to seal out water.
   - Make sure the power mirror connector is plugged in properly.

Mirror Holder Replacement

Special Tools Required
KTC trim tool set SOJATP2014 *
* Available through the Acura Tool and Equipment Program; 888-424-6857

NOTE:
- Put on gloves to protect your hands.
- Use the appropriate tool from the KTC trim tool set to avoid damage when removing components.

1. Adjust the mirror fully to the inward position.
2. Insert a trim tool between the mirror holder (A) and the mirror housing (B), and then quickly twist the tool to detach the bottom clips (C). Pad the edge of the mirror housing with a shop towel (D). Take care not to scratch the mirror housing.

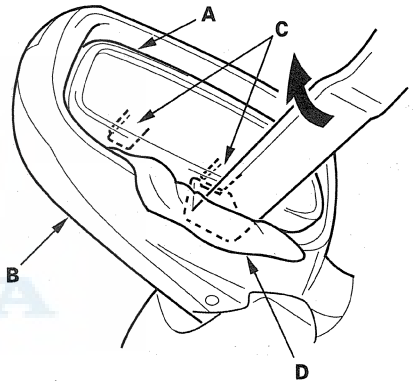

3. Carefully pull out the bottom edge of the mirror holder (A), then release the side clips (B). Separate the mirror holder from the actuator (C) by releasing the hooks (D). Disconnect the mirror defogger connectors (E) from the heater pad terminals.

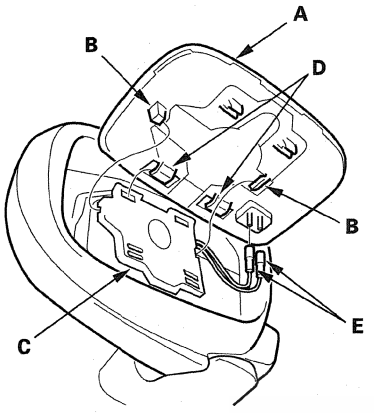

4. Reconnect the mirror defogger connector.

5. Reattach the hooks of the mirror holder to the actuator, then position the mirror holder on the actuator. Carefully push on the clip portions of the mirror holder until the mirror holder locks into place.

6. Check the operation of the actuator.

Rearview Mirror Replacement

Special Tools Required
KTC trim tool set SOJATP2014 *
* Available through the Acura Tool and Equipment Program; 888-424-6857

NOTE:
- Use the appropriate tool from the KTC trim tool set to avoid damage when removing components.
- When prying with a flat-tip screwdriver, wrap it with protective tape to prevent damage.

1. Using a trim tool, carefully remove the front cover (A) by releasing the hooks (B), and then disconnect the connector (C).

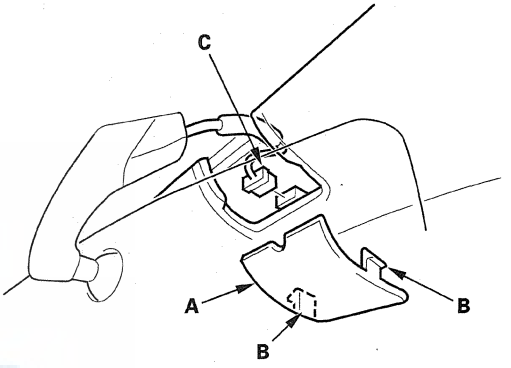

2. Carefully remove the bracket cover (A) by releasing the hooks (B). Take care not to scratch the cover and mirror bracket (C).

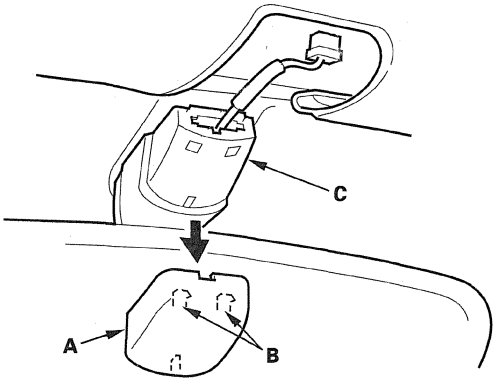

(cont'd)

Rearview Mirror Replacement (cont'd)

3. Slide the rearview mirror (A) forward to release the spring (B) by gently tapping the mirror bracket with a flat-tip screwdriver and a plastic hammer. Remove the mirror from the lug (C).

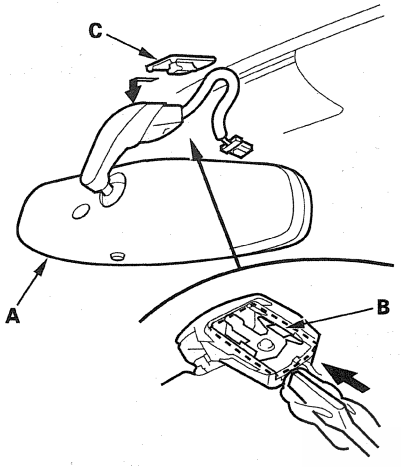

4. Remove the cover (A) from the mirror bracket (B) by releasing the hooks (C) in the sequence shown.

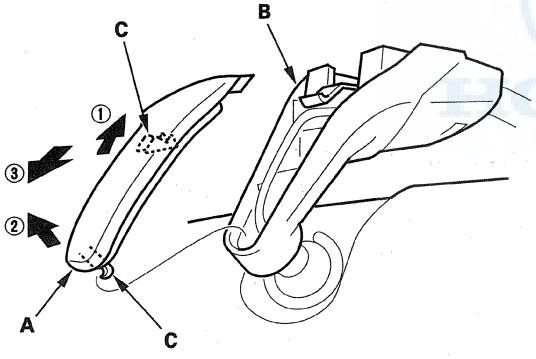

5. Install the rearview mirror (A) by sliding it over the lug (B) until the spring contacts the lug. Gently tap the mirror bracket with a flat-tip screwdriver and a plastic hammer. Be careful not to damage the wires.

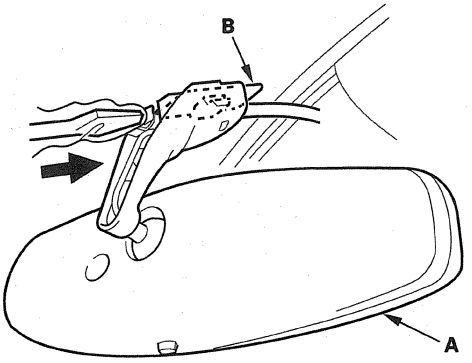

6. Install the cover (A) in the sequence shown. Take care not to damage the hooks (B).

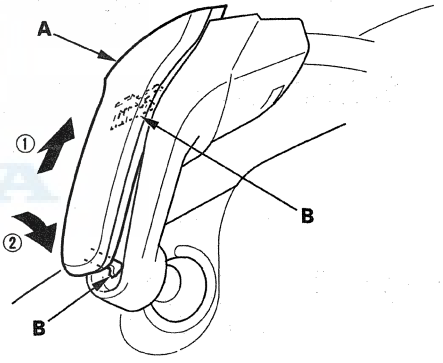

7. Install the bracket cover, and connect the connector, then install the headliner cap. Make sure the connector is plugged in properly.

Component Location Index

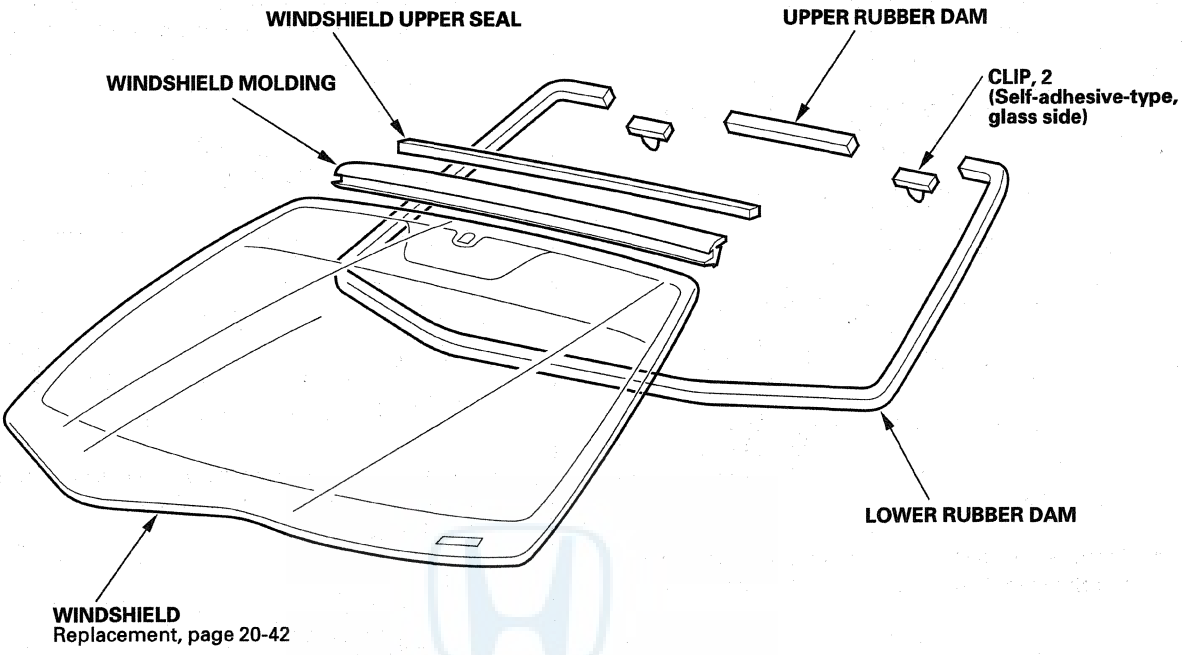

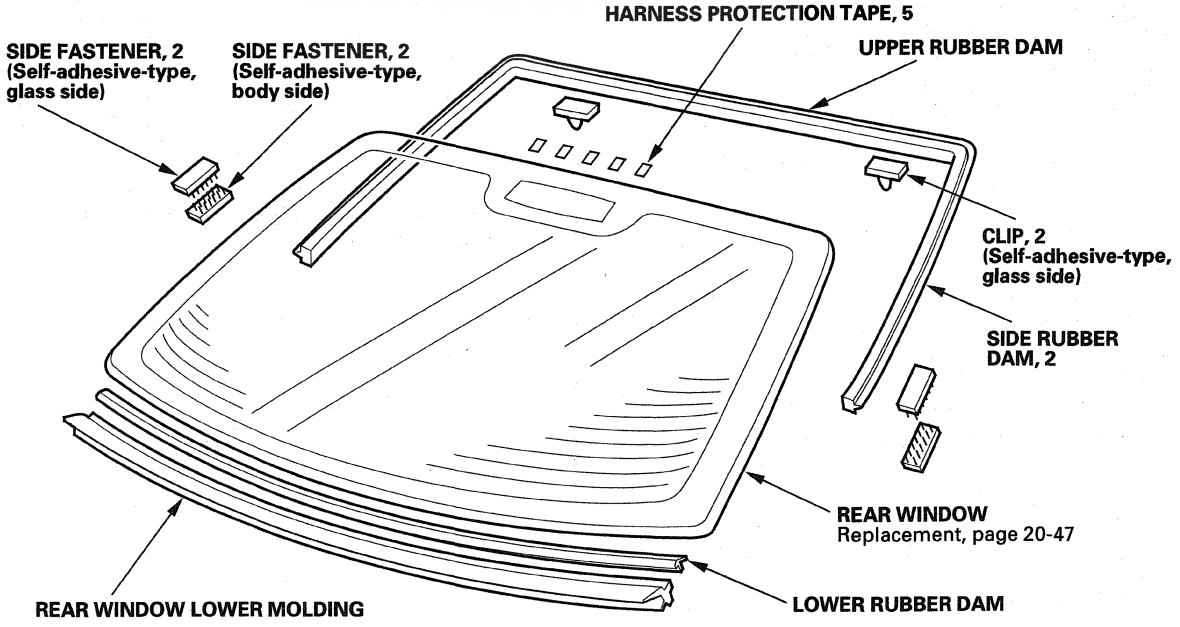

Windshield Replacement

NOTE:
- Put on gloves to protect your hands.
- Wear eye protection while cutting the glass adhesive with piano wire.
- Use seat covers to avoid damaging the seat.
- Glass adhesive can be efficiently cut with a commercially available auto glass tool. See the tool manufacturer's instructions for details.

1. Remove these items:
   - Windshield wiper arms (see page 22-386)
   - Cowl covers (see page 20-164)
   - Rearview mirror (see page 20-39)
   - A-pillar trim, both sides (see page 20-69)
   - Windshield side trim, both sides (see page 20-165)

2. Remove the molding (A) from the upper edge of the windshield (B). If necessary, cut the molding with a utility knife.

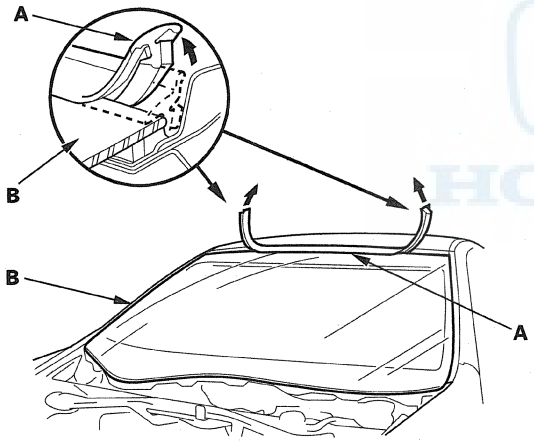

3. If the old windshield will be reinstalled, make alignment marks across the glass and the body with a grease pencil.

4. Pull down the front portion of the headliner (see page 20-86). Take care not to bend the headliner excessively, or you may crease or break it.

5. Apply protective tape along the edge of the dashboard and the body. Using an awl, make a hole through the rubber dam and adhesive from inside the vehicle at the corner portion of the windshield. Push a piece of piano wire through the hole, and wrap each end around a piece of wood.

6. With a helper on the outside, pull the piano wire (A) back and forth in a sawing motion. Hold the piano wire as close to the windshield (B) as possible to prevent damage to the body and the dashboard. Carefully cut through the rubber dam and adhesive (C) around the entire windshield.

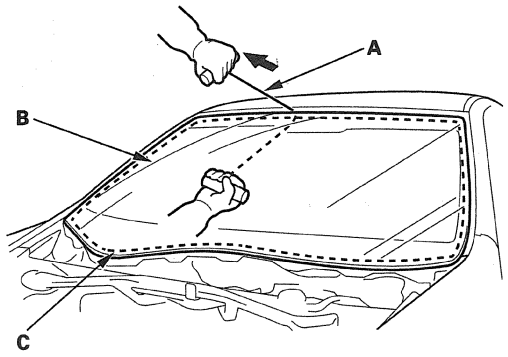

Cutting positions

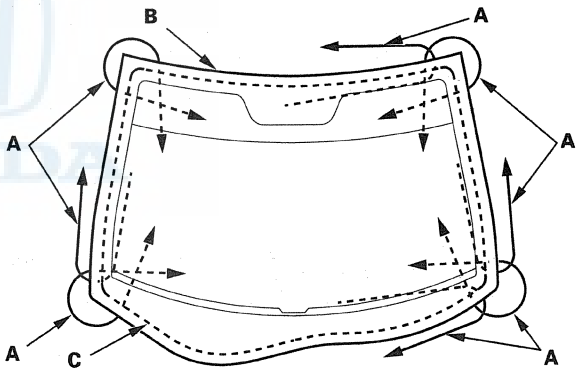

7. Carefully remove the windshield.

8. Use a putty knife to scrape the old adhesive smooth to a thickness of about 2 mm (0.08 in) on the bonding surface around the entire windshield opening flange:

   - Do not scrape down to the painted surface of the body; damaged paint will interfere with proper bonding.
   - Remove the rubber dam and the fasteners from the body.
   - Replace the dashboard seal with a new one.

9. Clean the body bonding surface with a shop towel dampened in isopropyl alcohol. After cleaning, keep oil, grease and water from getting on the clean surface.

10. If the old windshield will be reinstalled, use a putty knife to scrape off all of the old adhesive, the upper clips, and the rubber dam. Clean the inside face and the edge of the windshield with isopropyl alcohol where new adhesive will be applied. Make sure the bonding surface is kept free of water, oil and grease.

11. Attach the upper rubber dam (A), the lower rubber dam (B) with adhesive tape, and the clips (C) with adhesive tape to the inside face of the windshield (D) as shown:

    - Be sure the rubber dam and the clips line up with the alignment marks (E).
    - Be careful not to touch the windshield where adhesive will be applied.

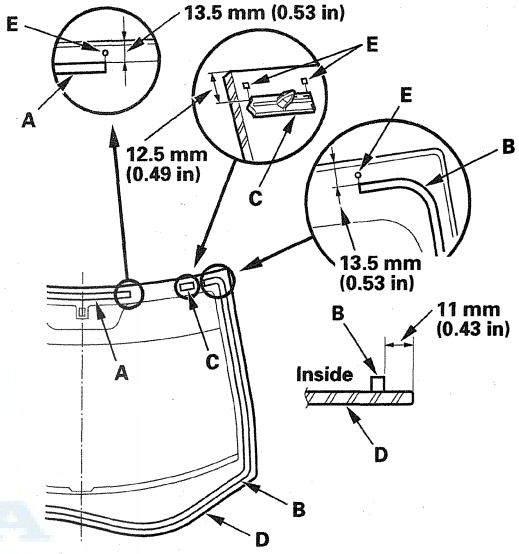

(cont'd)

Windshield Replacement (cont'd)

12. Attach the molding (A) with adhesive tape (B) to the upper edge of the windshield (C). Be careful not to touch the windshield where adhesive will be applied.

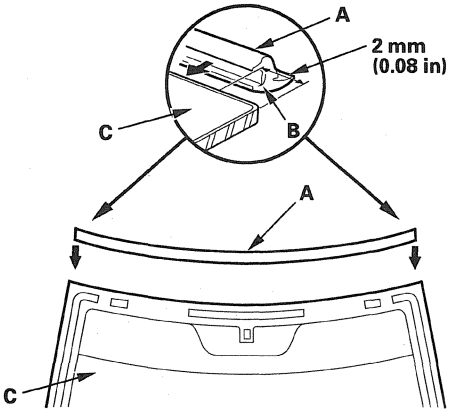

13. Attach the molding upper seal (A) to the inside surface of the molding (B) as shown.

////// : **Apply primer here.**

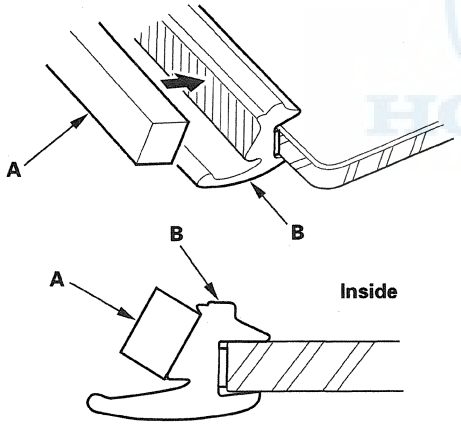

14. Set the windshield in the opening, and center it. Make alignment marks (A) across the windshield and the body with a grease pencil at the four points shown. Make sure both clips (B) contact the edge of the body holes. Be careful not to touch the windshield where adhesive will be applied.

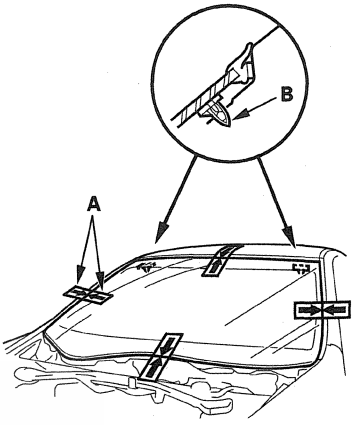

15. Remove the windshield.

16. With a applicator, apply a light coat of glass primer around the edge of the windshield (A) between the dams (B) and the molding (C) as shown, then lightly wipe it off with gauze or cheesecloth:

- Apply glass primer to the molding.
- Do not apply body primer to the windshield, and do not get body and glass primer applicators mixed up.
- Never touch the primed surfaces with your hands. If you do, the adhesive may not bond to the windshield properly, causing a leak after the windshield is installed.
- Keep water, dust, and abrasive materials away from the primed surfaces.

: **Apply glass primer here.**

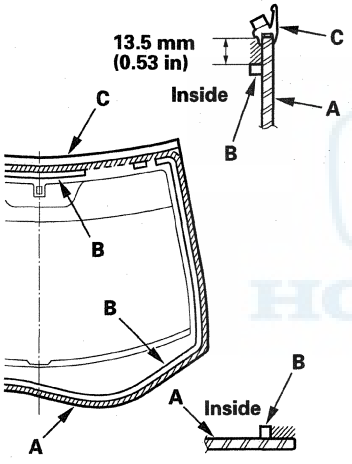

17. With a applicator, carefully apply a light coat of body primer to any exposed paint around the flange where new adhesive will be applied. Let the primer dry for at least 10 minutes:

- Do not apply body primer to any remaining original adhesive on the flange.
- Be careful not to mix up the body and glass primer applicators.
- Never touch the primed surfaces with your hands.

: **Apply body primer to any exposed paint as shown.**

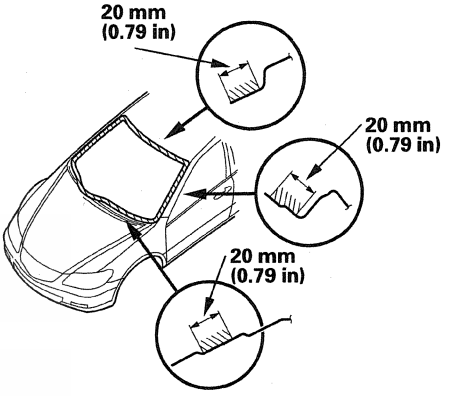

18. Cut a "V" in the end of the nozzle (A) on the adhesive cartridge as shown.

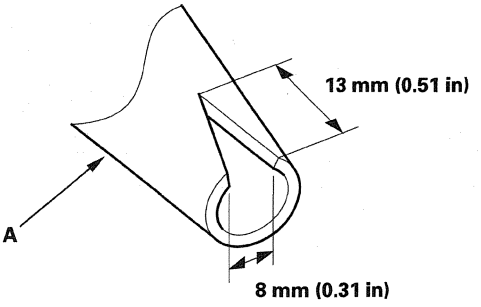

(cont'd)

Windshield Replacement (cont'd)

19. Put the cartridge in a caulking gun, and run a bead of adhesive (A) around the edge of the windshield (B) between the dams (C) and the molding (D) as shown. Apply the adhesive within 30 minutes after applying the glass primer. Make a slightly thicker bead at each corner.

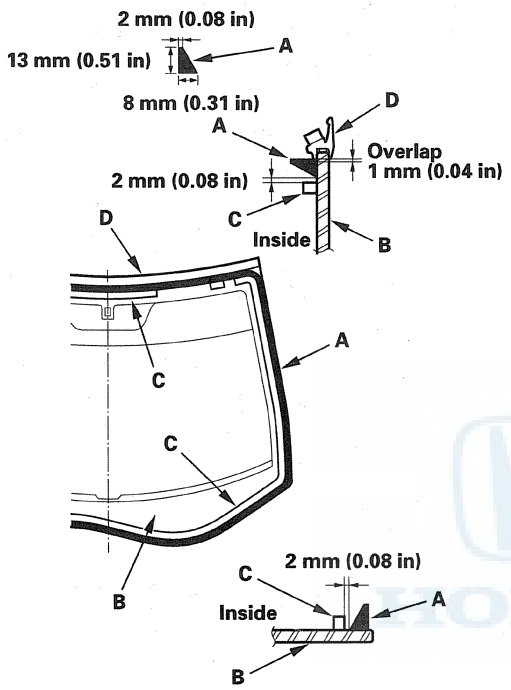

20. Using suction cups to hold the windshield over the opening, align it with the alignment marks made in step 14, and set it down on the adhesive. Lightly push on the windshield until its edges are fully seated on the adhesive all the way around. Do not open or close any of the doors for about an hour until the adhesive is dry.

21. Scrape or wipe any excess adhesive off with a putty knife or towel. To remove adhesive from a painted surface or the windshield, wipe with a soft shop towel dampened with isopropyl alcohol.

22. After the adhesive has dried, spray water over the windshield and check for leaks. Mark any leaking areas, and let the windshield dry, then seal with sealant:

    - Let the vehicle stand for at least 4 hours after windshield installation. If the vehicle has to be used within the first 4 hours, it must be driven slowly.
    - Keep the windshield dry for the one hour after installation.

23. Reinstall all remaining removed parts.

    NOTE: Advise the client not to do the following things for 2 to 3 days:
    - Slam the doors with all the windows rolled up.
    - Twist the body excessively (such as when going in and out of driveways at an angle or driving over rough, uneven roads).

Rear Window Replacement

NOTE:
- Put on gloves to protect your hands.
- Wear eye protection while cutting the glass adhesive with piano wire.
- Use seat covers to avoid damaging the seat.
- Do not damage the rear window defogger grid lines, window antenna grid lines, and terminals.

1. Remove these items:
   - Trunk lid (see page 20-158)
   - Rear shelf (see page 20-80)
   - High mount brake light (see page 22-227)
   - XM antenna module (see page 23-116)

2. Disconnect the window antenna connectors (A) and the rear window defogger connectors (B).

Left side

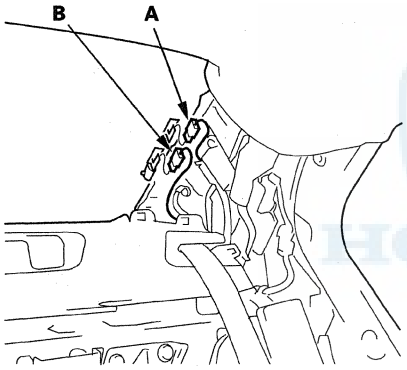

Right side

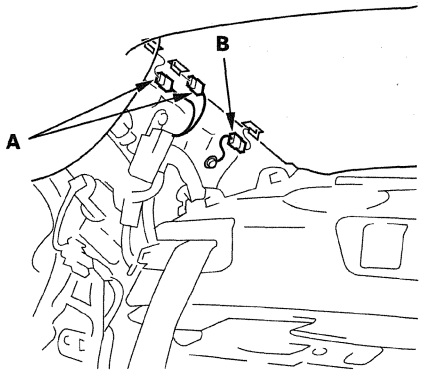

3. If the old rear window will be reinstalled, make alignment marks across the glass and the body with a grease pencil.

4. Pull down the rear portion of the headliner (A) by detaching the clips. Take care not to bend the headliner excessively, or you may crease or break it.

Fastener Locations

▷ : Clip, 2

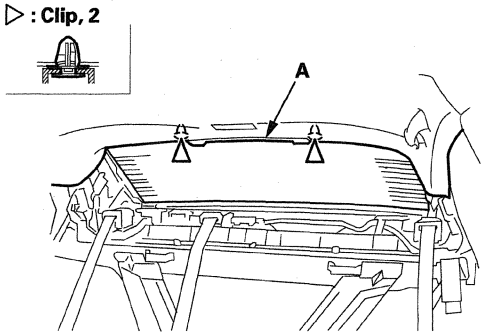

5. Apply protective tape along the inside and outside edges of the body. Using an awl, make a hole through the adhesive from inside the vehicle at the corner portion of the rear window. Push a piece of piano wire through the hole, and wrap each end around a piece of wood.

(cont'd)

Rear Window Replacement (cont'd)

6. Remove the lower rubber dam (A) from the lower edge of the rear window (B). If necessary, cut the lower rubber dam with a utility knife.

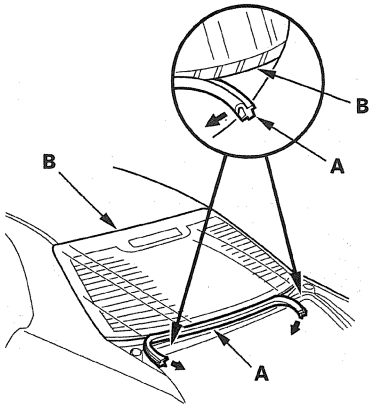

7. With a helper on the outside, pull the piano wire (A) back and forth in a sawing motion. Hold the piano wire as close to the rear window (B) as possible to prevent damage to the body, and carefully cut through the adhesive (C) around the entire rear window.

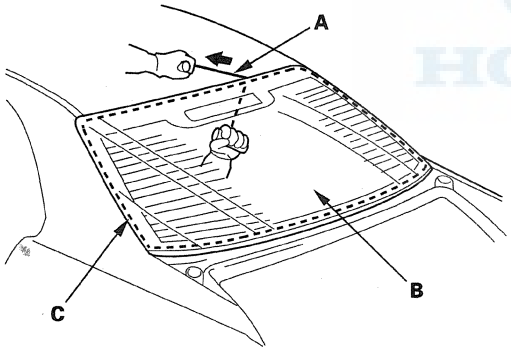

Cutting positions

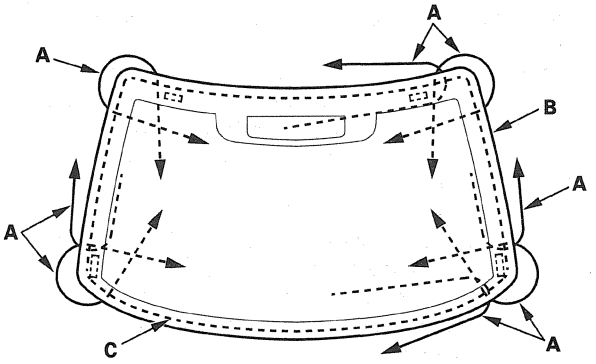

8. Carefully remove the rear window.

9. Use a putty knife to scrape the old adhesive smooth to a thickness of about 2 mm (0.08 in) on the bonding surface around the entire rear window opening flange:

   - Do not scrape down to the painted surface of the body; damaged paint will interfere with proper bonding.
   - Remove the fasteners from the body.

10. Clean the body bonding surface with a shop towel dampened in isopropyl alcohol. After cleaning, keep oil, grease and water from getting on the surface.

11. If the old rear window will be reinstalled, use a putty knife to scrape off all of the old adhesive, the moldings and the fasteners from the rear window. Clean the inside face and the edge of the rear window with isopropyl alcohol where new adhesive will be applied. Make sure the bonding surface is kept free of water, oil, and grease.

12. Attach the upper rubber dam (A), the lower rubber dam (B), the clips (C), and the fasteners (D) with adhesive tape to the inside face of the rear window (E) as shown:

- Before installing the upper rubber dam, apply primer to the upper corner areas where it adhesive tape will be stuck in inside face of the rear window.
- Be sure the lower rubber dam, the clips, and the fasteners line up with the alignment marks (F).
- Be sure the convex portion (G) of the left and the right clips face toward the left.
- Be careful not to touch the windshield where adhesive will be applied.

: **Apply primer here.**

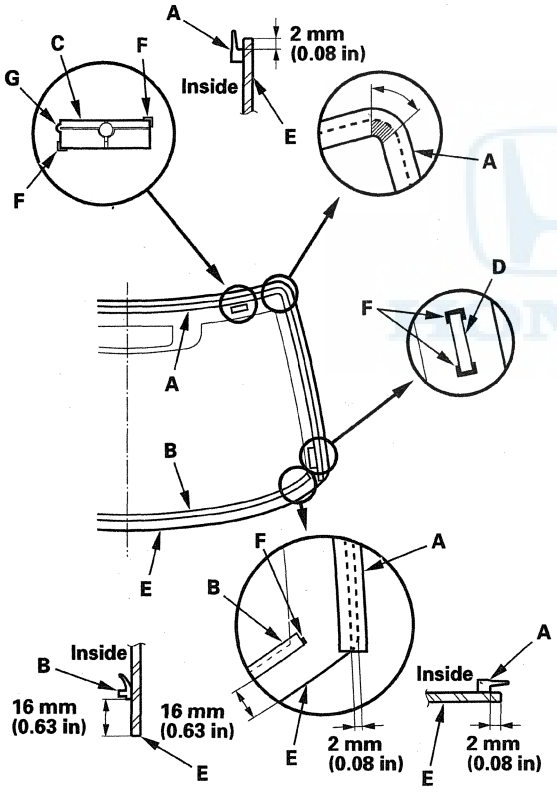

13. Attach the lower molding (A) with adhesive tape (B) to the lower edge of the rear window (C):

- After installing the molding, cut the ends (D) of the molding as shown.
- Be careful not to touch the windshield where adhesive will be applied.

: **Apply primer here.**

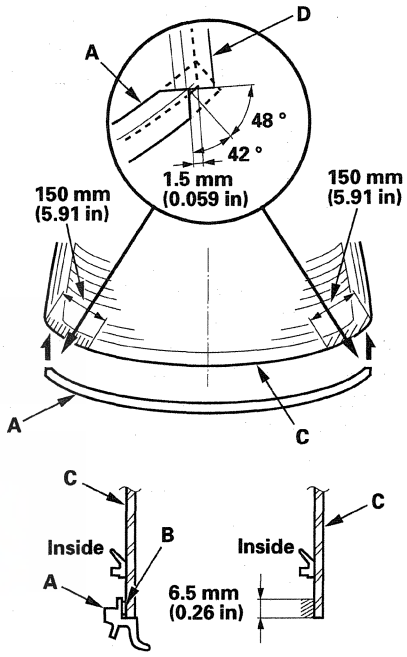

(cont'd)

Rear Window Replacement (cont'd)

14. Attach the fasteners (A) with adhesive tape to the rear window opening flange (B) of the body on both sides.

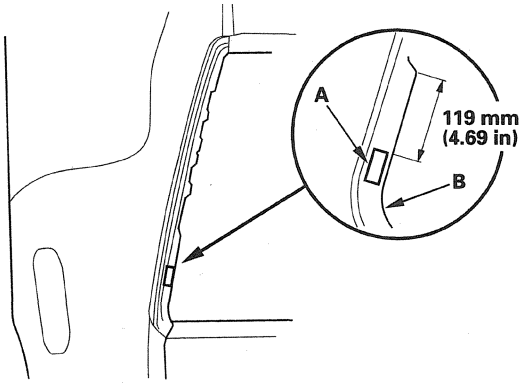

15. Set the rear window in the opening, and center it. Make alignment marks (A) across the rear window and the body with a grease pencil at the four points shown. Make sure both upper clips (B) are in the body holes. Be careful not to touch the rear window where adhesive will be applied.

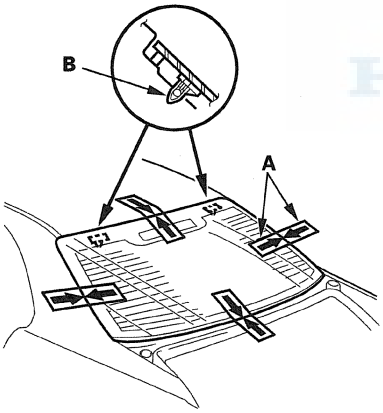

16. Remove the rear window.

17. With a applicator, apply a light coat of glass primer along the edge of the rear window (A) between the dam (B) and the molding (C) as shown, then lightly wipe it off with gauze or cheesecloth:

- Do not apply body primer to the rear window, and do not get body and glass primer applicators mixed up.
- Never touch the primed surfaces with your hands. If you do, the adhesive may not bond to the rear window properly, causing a leak after the rear window is installed.
- Keep water, dust, and abrasive materials away from the primed surfaces.

▨ : **Apply glass primer here.**

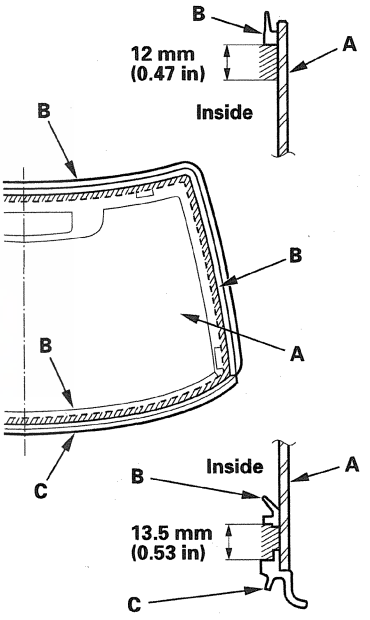

18. With a applicator, carefully apply a light coat of body primer to any exposed paint around the flange where new adhesive will be applied. Let the primer dry for at least 10 minutes:

    - Do not apply body primer to any remaining original adhesive on the flange.
    - Be careful not to mix up the body and the glass primer applicators.
    - Never touch the primed surfaces with your hands.

    ////// : **Apply body primer to any exposed paint as shown.**

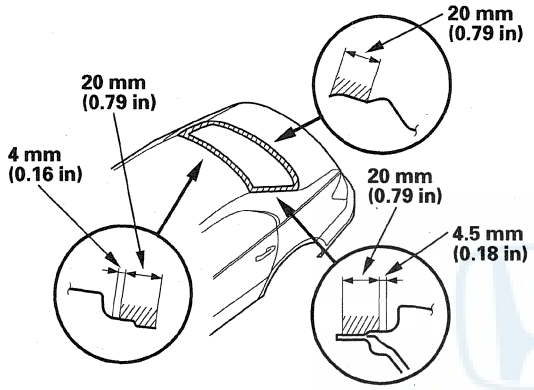

19. Cut a "V" in the end of the nozzle (A) on the adhesive cartridge as shown.

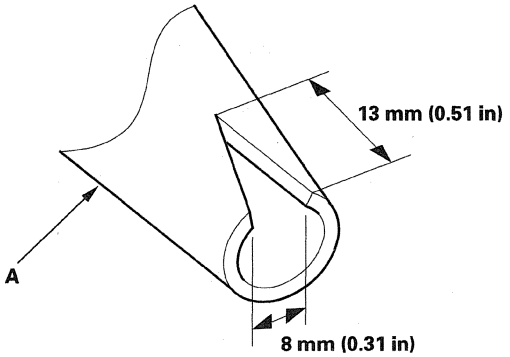

20. Put the cartridge in a caulking gun, and run a bead of adhesive (A) around the edge of the rear window (B) between the dams (C) and the molding (D) as shown. Apply the adhesive within 30 minutes after applying the glass primer. Make a slightly thicker bead at each corner.

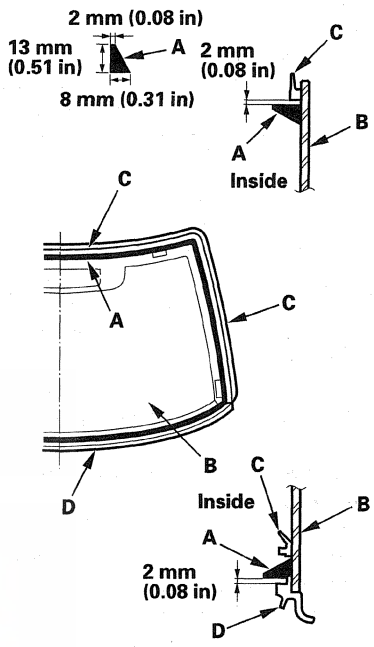

(cont'd)

Rear Window Replacement (cont'd)

21. Using suction cups to hold the rear window over the opening, align it with the alignment marks you made in step 15, and set it down on the adhesive. Lightly push on the rear window until its edges are fully seated on the adhesive all the way around. Do not open or close any of the doors for about an hour until the adhesive is dry.

22. Scrape or wipe any excess adhesive off with a putty knife or towel. To remove adhesive from a painted surface or the rear window, use a soft shop towel dampened with isopropyl alcohol.

23. After the adhesive has dried, then spray water over the rear window and check for leaks. Mark any leaking areas, let the rear window dry, then seal with sealant. Let the vehicle stand for at least 4 hours after rear window installation. If the vehicle has to be used within the first 4 hours, it must be driven slowly.

24. Reinstall all remaining removed parts.

    NOTE: Advise the client not to do the following things for 2 to 3 days:
    - Slam the doors with all the windows rolled up.
    - Twist the body excessively (such as when going in and out of driveways at an angle or driving over rough, uneven roads).

Component Location Index

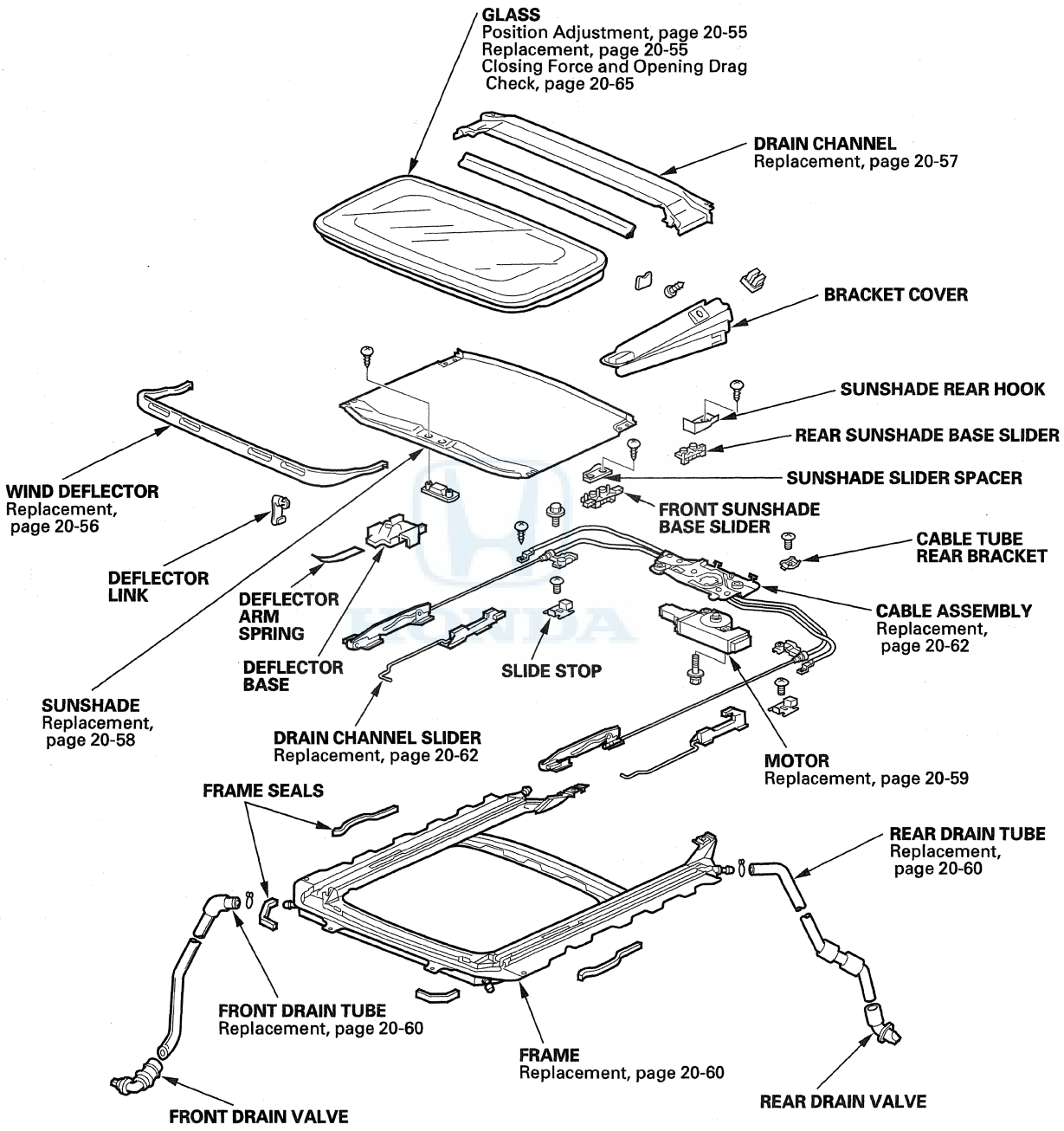

Symptom Troubleshooting Index

Symptom	Diagnostic procedure
Water leaks from moonroof	1. Check for a clogged or detached drain tube. 2. Check for a gap between the glass weatherstrip and the roof panel (see page 20-55). 3. Check for a defective or an improperly installed glass weatherstrip or drain channel. 4. Check for a gap between the drain seal and the roof panel.
Wind noise from moonroof	1. Check for excessive clearance between the glass weatherstrip and the roof panel. 2. Check the glass position adjustment (see page 20-55).
Motor noise from moonroof	1. Check for a loose motor. 2. Check for a worn gear or bearing. 3. Check for a deformed cable assembly. 4. Check for dirt or debris.
Moonroof glass does not move, but motor turns	1. Check for a defective gear or inner cable. 2. Check for foreign matter stuck between the guide rail and the slider. 3. Check for a loose inner cable. 4. Make sure the cable assembly is attached properly.
Moonroof glass does not move and motor does not turn (glass can be moved with 5 mm hex wrench)	1. Check for a blown fuse. 2. Check for a faulty moonroof switch. 3. Check for a run down battery. 4. Check for a defective motor control unit.
Moonroof glass does not stop at proper flush closed position	1. Reset the moonroof control unit (see page 22-432). 2. Check glass position adjustment (see page 20-55).
Moonroof glass moves in a jerking motion (moves 40 mm (1.57 in), stops for 0.4 seconds, and repeats)	Reset the moonroof control unit (see page 22-432).
During auto close operation, moonroof glass reverses when no object is trapped	1. Check for dirt and debris in the track. 2. Reset the moonroof control unit (see page 22-432).
Moonroof glass moves, but there is no AUTO function	Reset the moonroof control unit (see page 22-432).

Glass Position Adjustment

The roof panel (A) should be even with the glass weatherstrip (B), to within 0+1/−1 mm (0+0.04/−0.04 in) all the way around, and to within 13.5+1/−1 mm (0.53+0.04/−0.04 in) between the roof panel and the front edge of the glass (C). If not, make the following adjustment:

NOTE: Reset the moonroof control unit (see page 22-432). If glass position is still incorrect go to step 1.

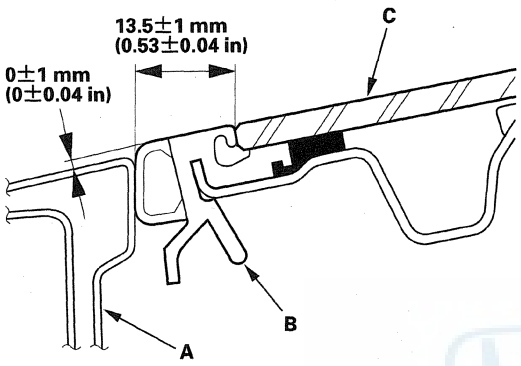

1. Remove the bracket cover (see step 3 on page 20-55).
2. Using a TORX T25 bit, loosen the bolts on each side, and adjust the glass (A).

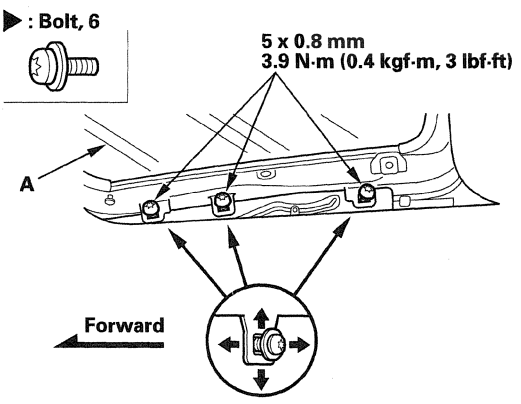

3. Tighten all bolts securely.
4. If necessary, repeat on the opposite side.

   NOTE: After glass position is mechanically adjusted. Reset the moonroof control unit (see page 22-432).

Glass Replacement

1. Close the glass fully.
2. Slide the sunshade all the way back.
3. Pry out the lid (A), remove the screws (B), and release the pins (C), then remove both bracket covers (D). Using a TORX T25 bit, remove the bolts (E) from both glass brackets (F).

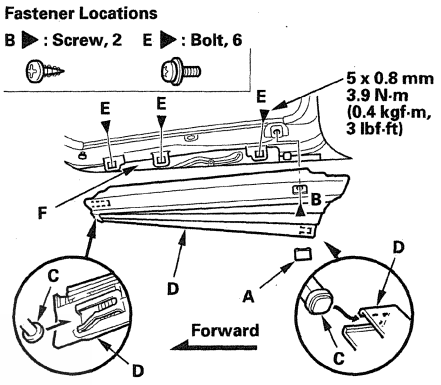

4. Remove the glass (A) by lifting it up. Do not damage the roof panel.

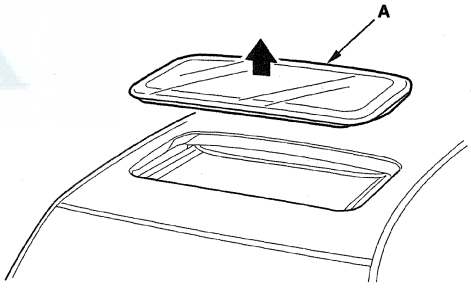

5. Install the glass in the reverse order of removal, and note these items:

   - Apply liquid thread lock to the glass mounting bolts before reinstallation.
   - Reset the moonroof control unit (see page 22-432).
   - Do the glass position alignment procedure (see page 20-55).

6. Check for water leaks (see step 8 on page 20-34). Use free-flowing water from a hose without a nozzle. Do not use high-pressure water.

   NOTE: It is normal for some water to seep past the moonroof into the moonroof frame, and exit through the drains.

Wind Deflector Replacement

1. Open the glass fully.
2. Remove the links (A) from both sides.

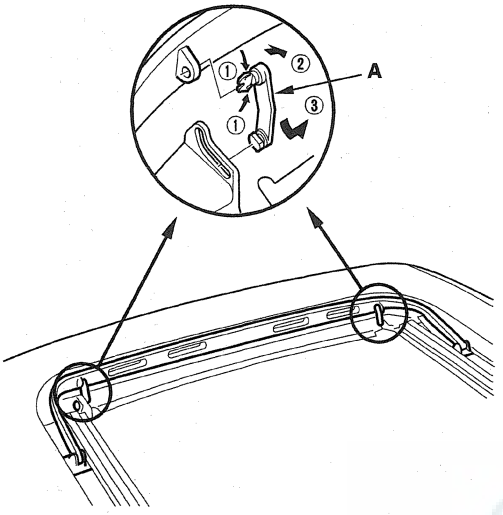

3. Remove the wind deflector (A).

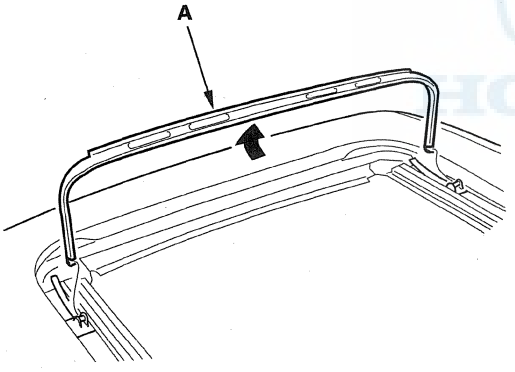

4. Pry up on the deflector bases (A) and release the hooks (B), then remove the bases with springs (C) from both sides.

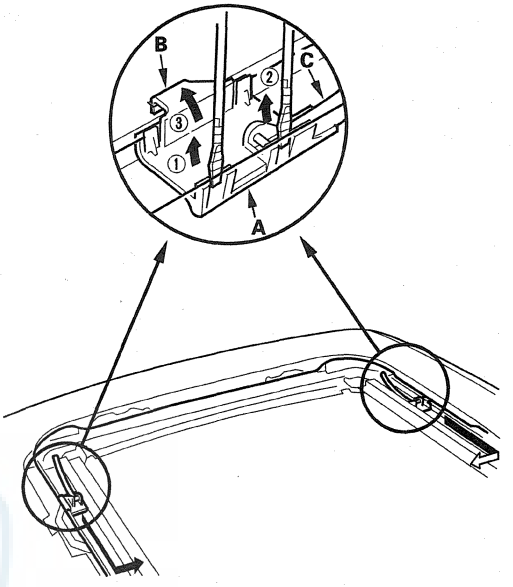

5. Install the deflector in the reverse order of removal.
6. Reset the moonroof control unit (see page 22-432).

Drain Channel Replacement

1. Remove the glass (see page 20-55).

2. With the moonroof wrench, move both glass brackets (A) to the position where the moonroof normally tilts up, and disconnect the drain channel rods (B) from the joint bushings (C) on both sides.

   NOTE: Check the bushings for damage, and replace them if necessary.

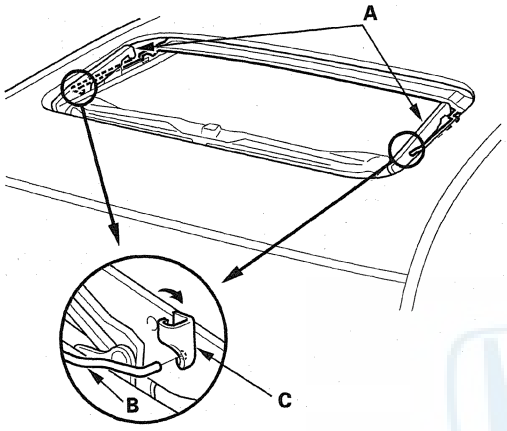

3. Slide the drain channel (A) forward.

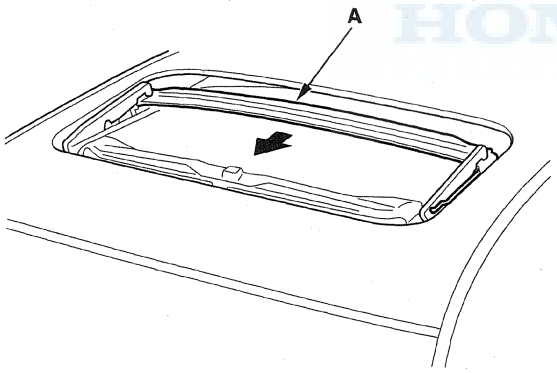

4. Pull the rear edge of the drain channel (A) up while pushing both clips (B), and release the channel from both hooks (C) of the drain channel slider by pulling it rearward.

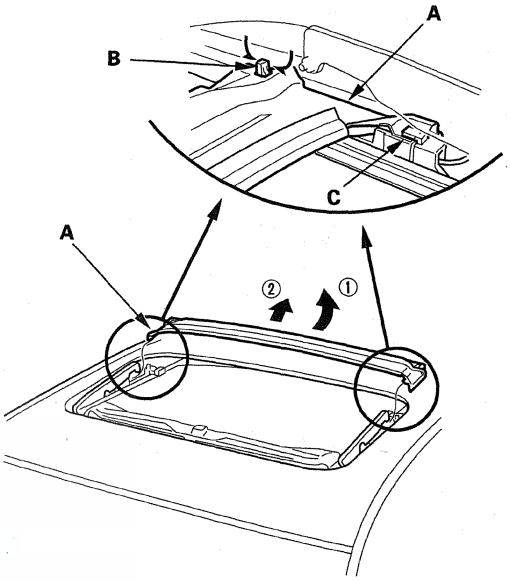

5. Remove the drain channel.

6. Install the channel in the reverse order of removal, and note these items:

   - Push the clips into place securely.
   - Check the glass position adjustment (see page 20-55).

7. Reset the moonroof control unit (see page 22-432).

8. Check for water leaks (see step 8 on page 20-34). Let the water run freely from a hose without a nozzle. Do not use a high-pressure spray.

Sunshade Replacement

1. Remove the drain channel (see page 20-57).
2. Slide the sunshade (A) until you can see both sunshade slider spacers (B).

Fastener Locations

▶: Screw, 4

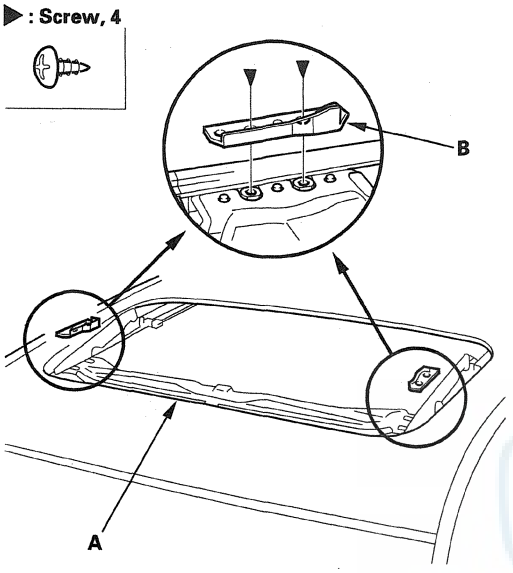

3. Remove the screws, then remove both spacers.
4. While lifting the front portion of the sunshade (A), move the sunshade forward until you can see both sunshade rear hooks (B). Do not damage the sunshade and the hooks.

Fastener Locations

▶: Screw, 4

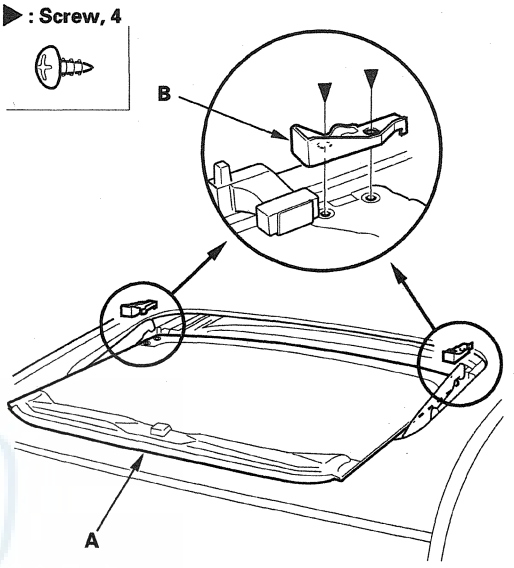

5. Remove the screws, then remove both hooks.

6. Remove the sunshade (A).

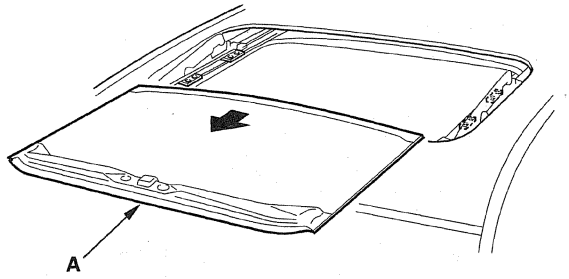

Sunshade base slider removal

7. If necessary, remove both front sunshade base sliders (A) and both rear sunshade base sliders (B).

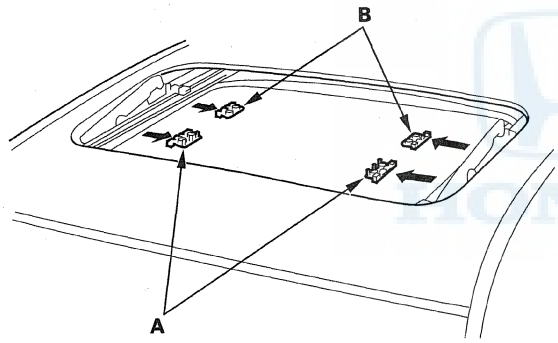

8. Install the sunshade in the reverse order of removal, and check the glass position adjustment (see page 20-55).

9. Reset the moonroof control unit (see page 22-432).

10. Check for water leaks (see step 8 on page 20-34). Let the water run freely from a hose without a nozzle. Do not use a high-pressure spray.

Motor Replacement

1. Remove the headliner (see page 20-86).

2. Put on gloves to protect your hands. Disconnect the connector (A), and remove the bolts, then remove the motor (B).

Fastener Locations

▶ : Bolt, 2

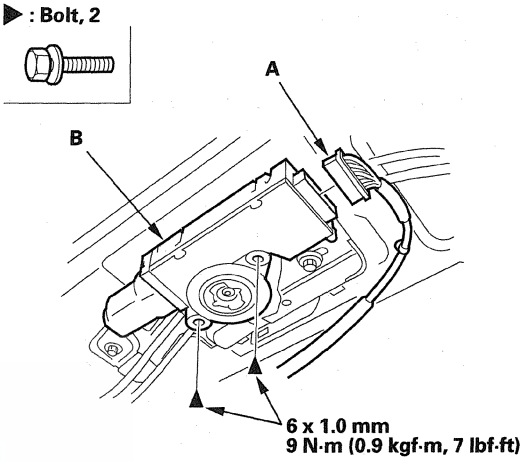

3. Install the motor in the reverse order of removal, and note these items:

- Make sure the connector is plugged in properly.
- Reset the moonroof control unit (see page 22-432).
- Check the motor operation.

Frame and Drain Tube Replacement

SRS components are located in this area. Review the SRS component locations (see page 24-12) and the precautions and procedures (see page 24-14) before doing repairs or service.

1. Remove these items:
   - Headliner (see page 20-86)
   - Moonroof glass (see page 20-55)

2. Put on gloves to protect your hands. Disconnect the motor connector (A).

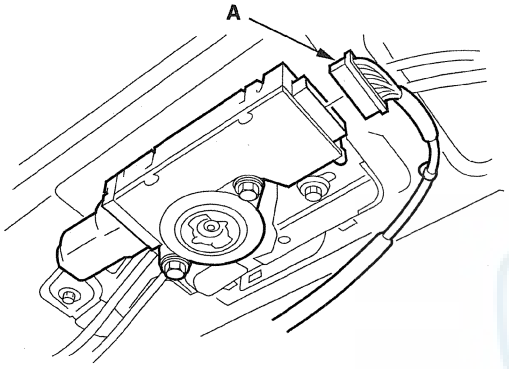

3. Disconnect the drain tubes (A).

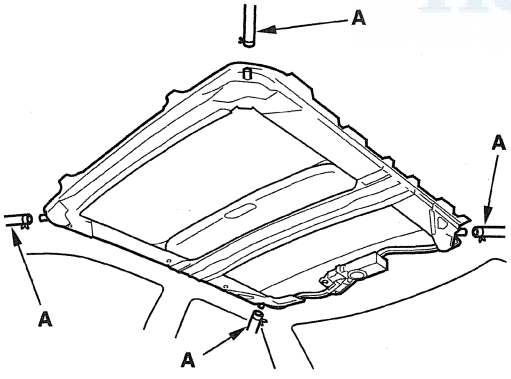

4. With an assistant holding the frame (A), remove the bolts, starting at the rear, and release the rear hooks (B) by moving the frame forward.

Fastener Locations

▶: Bolt, 10

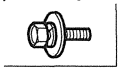

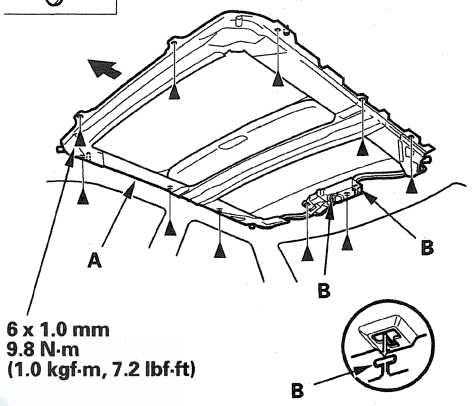

Front Drain Tube

5. Remove these items:
   - Front door sill trim (see page 20-67)
   - Kick panel (see page 20-67)
   - Driver's dashboard undercover (see page 20-100)

6. Driver's side: Remove the bolt, and release the hook (A), then move the fuse box (B) as needed.

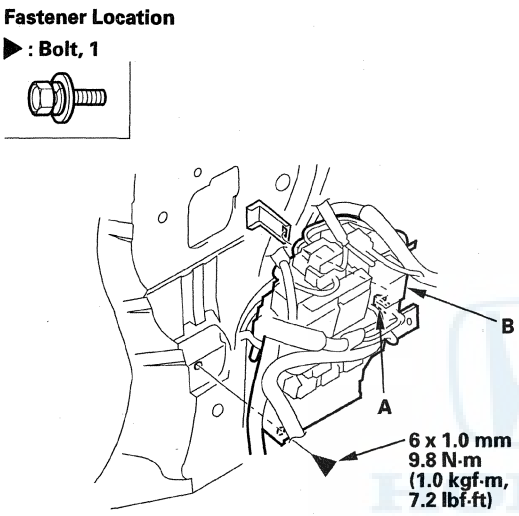

7. To remove a front drain valve (A) from the body, tie a string to the top end of the drain tube, then pull the front drain tube (B) down out of the A-pillar. Leave the string in the pillar to use when reinstalling the drain tube.

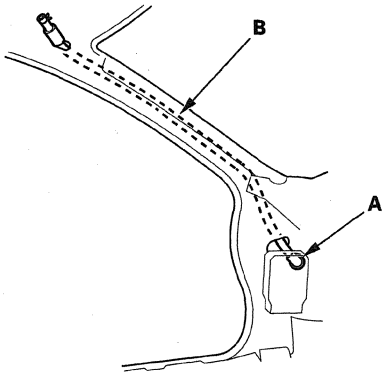

Rear Drain Tube

8. Remove these items:
   - Trunk floor lid (see page 20-83)
   - Trunk front trim panel (see page 20-83)
   - Trunk rear trim panel (see page 20-83)
   - Trunk side trim panel (see page 20-83)

9. Tie a string to the top end of the rear drain tube (A), then pull the drain tube down out of the pillar. Leave the string in the pillar to use when reinstalling the drain tube.

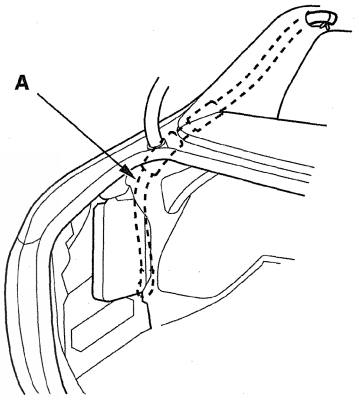

(cont'd)

Frame and Drain Tube Replacement (cont'd)

10. Install the frame and the drain tube in the reverse order of removal, and note these items:

    - Before installing the frame, clear the drain tubes and the drain valves using compressed air.
    - When installing a front drain tube, tie the string that was left in the pillar to the top end of a new drain tube and pull it up into the roof.
    - Check the frame seal.
    - Clean the surface of the frame.
    - When installing the frame, first attach the rear hooks into the body holes.
    - Make sure the connectors are plugged in properly.
    - When connecting the drain tubes, slide them over the frame nozzles at least 10 mm (0.39 in).
    - Install the tube clips (A) on the drain tubes (B) as shown.
    - After all parts are installed, including the headliner, reset the moonroof control unit (see page 22-432).
    - Do the glass position adjustment (see page 20-55).

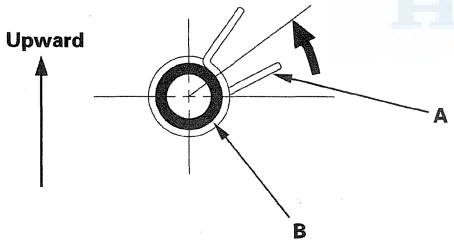

11. Check for water leaks (see step 8 on page 20-34). Let the water run freely from a hose without a nozzle. Do not use a high-pressure spray.

Drain Channel Slider and Cable Assembly Replacement

1. Remove the frame (see page 20-60).

2. Remove these parts from the frame:

    - Sunshade (see page 20-58)
    - Moonroof motor (see page 20-59)

3. Put on gloves to protect your hands. Remove the screws (A, B) securing the slide stops (C), and the cable tube rear brackets (D). Remove the cable tube side bracket mounting bolts (E) and the cable tube mounting screws (F) from both sides of the frame (G).

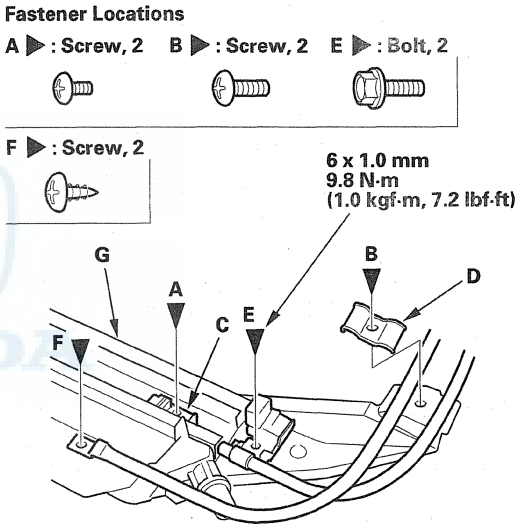

4. Turn both cable tube side brackets (A) up to release the hooks (B) from the holes in both sides of the frame.

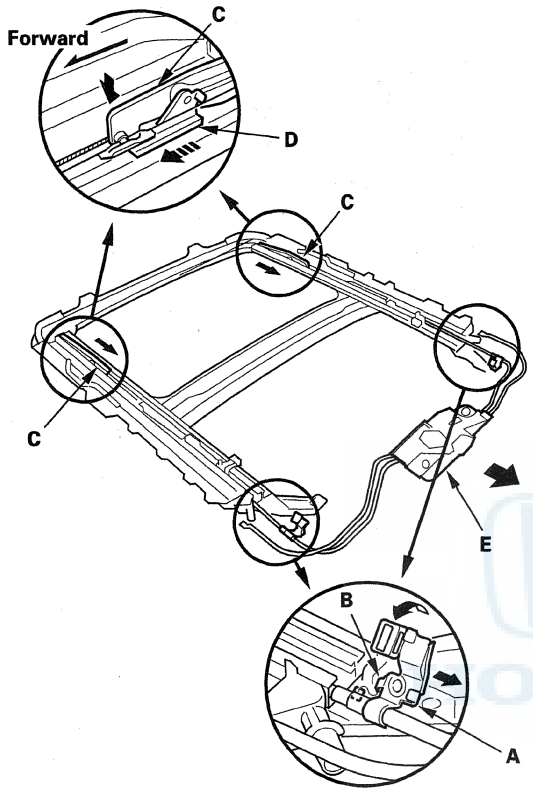

5. Pivot the glass brackets (C) down by sliding the link lifters (D) back, then slide both glass brackets back with the link lifters.

6. Slide the cable assembly (E) half-way.

7. Remove the slide stops (A) and the drain channel sliders (B) from both sides.

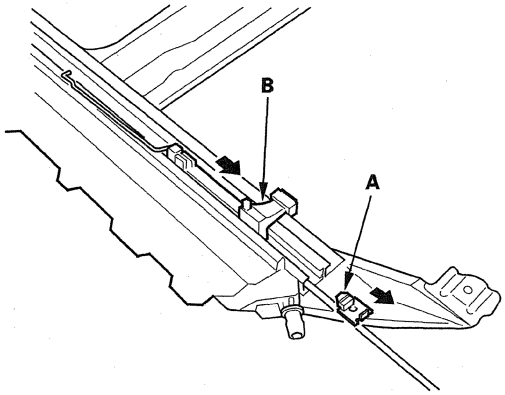

8. Slide the cable assembly (A) and both glass brackets (B) back, remove the deflector sliders (C) from both glass brackets, then remove them from the frame (D).

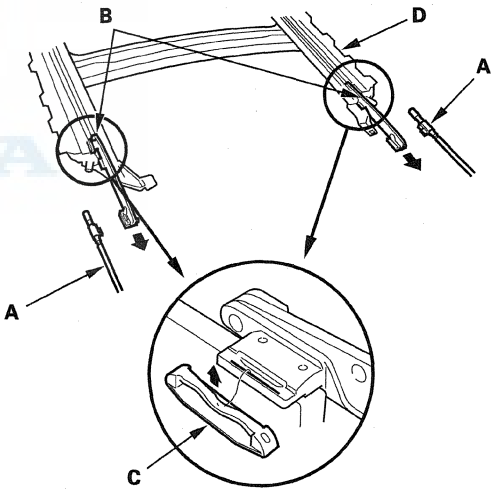

(cont'd)

Drain Channel Slider and Cable Assembly Replacement (cont'd)

9. Install the slider and the cable assembly in the reverse order of removal, and note these items:

   - Damaged parts should be replaced.
   - Apply molybdenum grease to the glass bracket (A) and the guide rail portion of the frame (B) indicated by the arrows.
   - Before reinstalling the motor, make sure both link lifters are parallel, and in the fully closed position.
   - Before reinstalling the motor, slide both drain channel sliders (C) rearward fully until the slider portions of the inner cable contact the slide stops (D) on the guide rail to slide both drain channel sliders.
   - Before reinstalling the motor, install the frame and the glass, then check the opening drag (see page 20-65).
   - After reinstalling the motor, reset the moonroof control unit (see page 22-432).

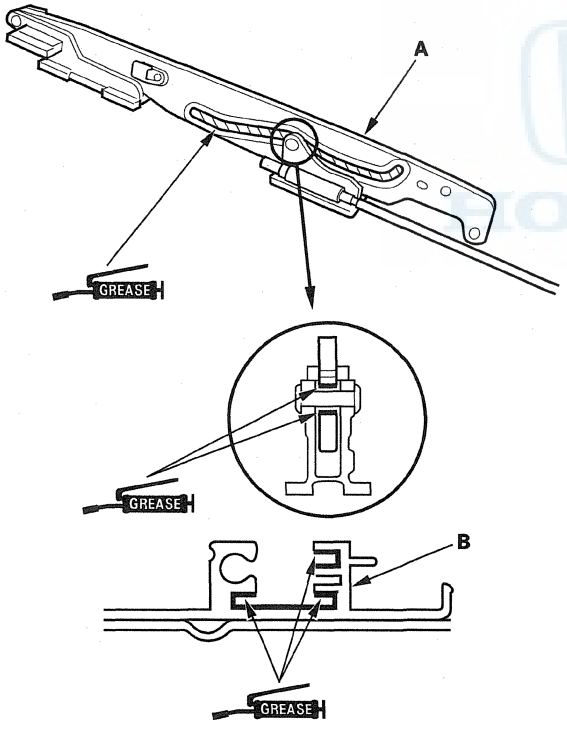

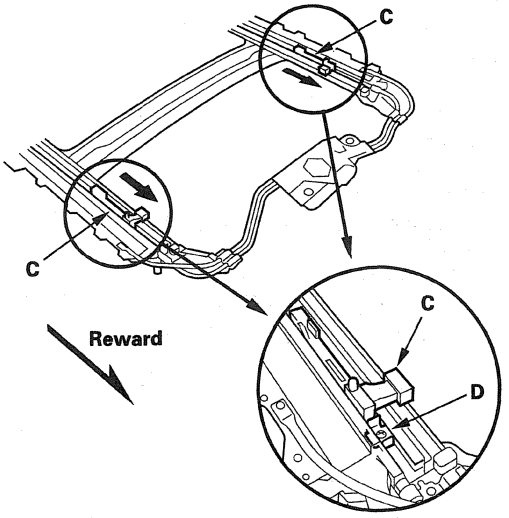

Closing Force and Opening Drag Check

1. Remove the headliner (see page 20-86).

2. Closing force check:

   - Cover the leading edge of the glass (A) with a shop towel (B), and attach a spring scale (C) as shown.
   - Have an assistant hold the switch to close the glass while you measure the force required to stop it.
   - Read the force as soon as the glass stops moving, then immediately release the switch and the spring scale.

   Closing force: 200—290 N (20—30 kgf, 44—66 lbf)

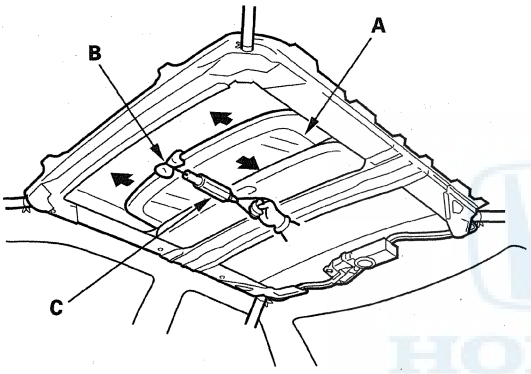

3. If the force in not within specification, remove the moonroof motor (see page 20-59), and check the following items:

   - Check the gear teeth and the inner cable for breakage and damage. If the gear teeth are broken, replace the motor. If the inner cable is damaged, remove the frame (see page 20-60), and replace the cable (see page 20-62).
   - Check the moonroof motor for damage, and do the moonroof control unit input test (see page 22-435). If the motor is damaged, fails to run, or does not turn smoothly, replace it.
   - Check the opening drag. Go to step 4.

4. Opening drag check: Protect the leading edge of the glass with a shop towel (A). Measure the effort required to open the glass using a spring scale (B) as shown.

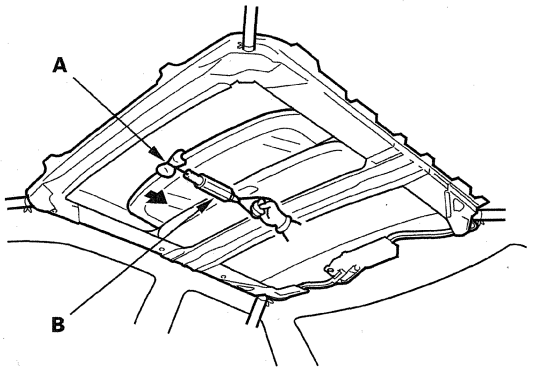

5. If the load is over 40 N (4 kgf, 9 lbf), check:

   - The side clearance and glass position adjustment (see page 20-55).
   - For broken or damaged sliding parts. If any sliding parts are damaged, replace them.

6. Reset the moonroof control unit (see page 22-432) after reinstalling the moonroof motor.

HONDA

Component Location Index

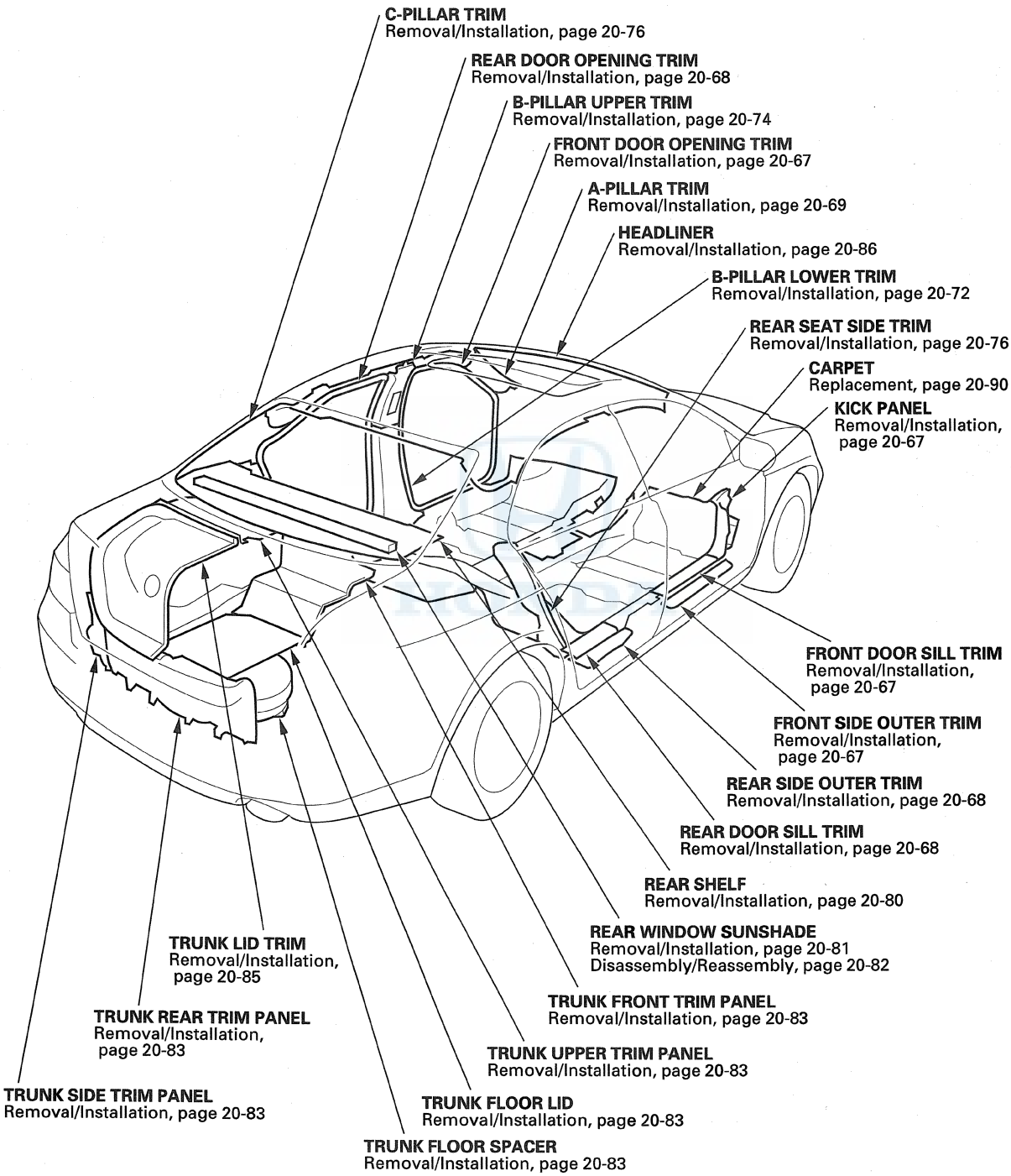

Trim Removal/Installation - Door Areas

Special Tools Required
KTC trim tool set SOJATP2014 *
* Available through the Acura Tool and Equipment Program; 888-424-6857

Front Door Sill Area

NOTE:
- Put on gloves to protect your hands.
- Take care not to bend or scratch the trim and the panels.
- Use the appropriate tool from the KTC trim tool set to avoid damage when removing components.

1. Detach the hooks (A) and the tabs (B) from the kick panel (C) and B-pillar lower trim (D), and pull the front door sill trim (E) up by hand to detach the clips (F), then remove it from the front door opening trim (G).

Fastener Locations
F ▷ : Clip, 4 (White) I ▷ : Clip, 4

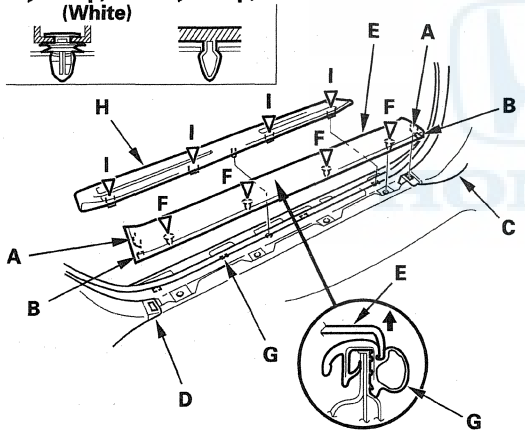

2. If necessary, pull the front side outer trim (H) up to detach the clips (I), then remove the trim.

3. Remove the left kick panel (A) or the right kick panel (B).

-1 Pull out the door opening trim (C) as needed from the kick panel hooks (D) and the door opening flange.
-2 Pull the kick panel back by hand to detach the clips (E, F), then remove it.

Driver's side

Fastener Locations
E ▷ : Clip, 1 (White) F ▷ : Clip, 1 (Light Blue)

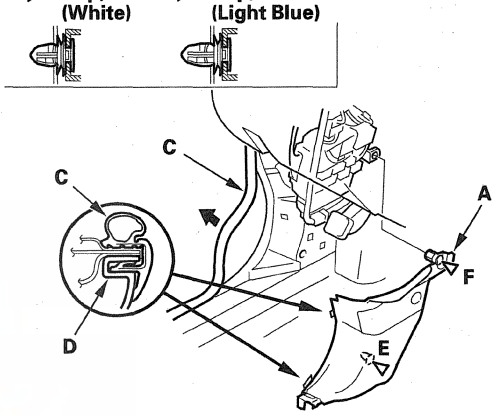

Passenger's side

Fastener Locations
E ▷ : Clip, 1 (White) F ▷ : Clip, 1 (Light Blue)

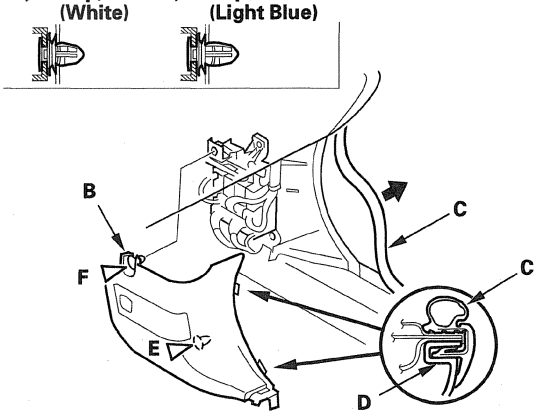

(cont'd)

Trim Removal/Installation - Door Areas (cont'd)

4. Pull out the front door opening trim (A) from the trim hooks (B) and around the front door opening flange, then remove the trim.

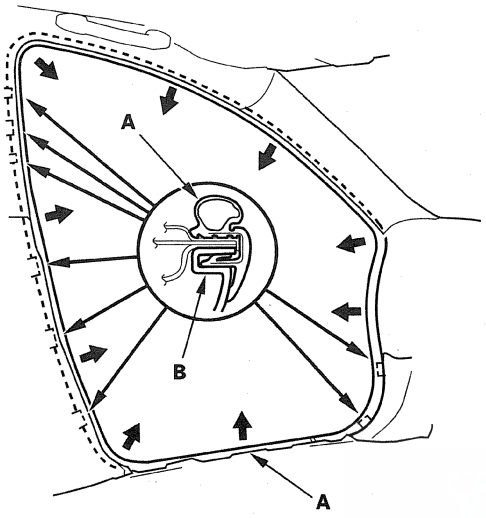

5. Install the trim in the reverse order of removal, and note these items:

   - If the clips are damaged or stress-whitened, replace them with new ones.
   - Push the clips and the hooks into place securely.

Special Tools Required

KTC trim tool set SOJATP2014 *

* Available through the Acura Tool and Equipment Program; 888-424-6857

Rear Door Sill Area

NOTE:

- Put on gloves to protect your hands.
- Take care not to bend or scratch the trim and the panels.
- Use the appropriate tool from the KTC trim tool set to avoid damage when removing components.

1. Detach the hook (A) and the tab (B) from the B-pillar lower trim (C) and the seat side trim (D), and pull the rear door sill trim (E) up by hand to detach the clips (F), then remove it from the rear door opening trim (G).

Fastener Locations

F ▷: Clip, 2 (White) I ▷: Clip, 2 J ▷: Clip, 1 (Black)

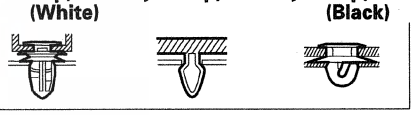

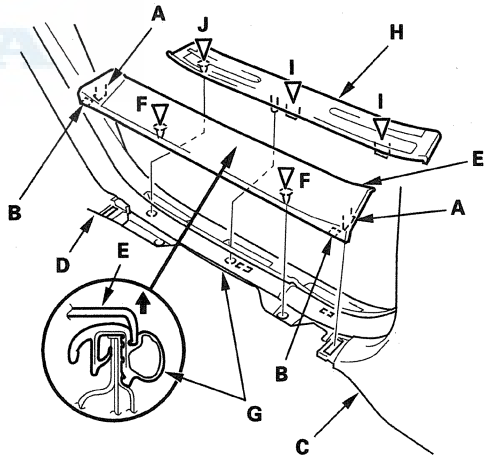

2. If necessary, pull the rear side outer trim (H) up to detach the clips (I, J), then remove the trim.

3. Pull out the rear door opening trim (A) from the trim hooks (B) and around the rear door opening flange, then remove the trim.

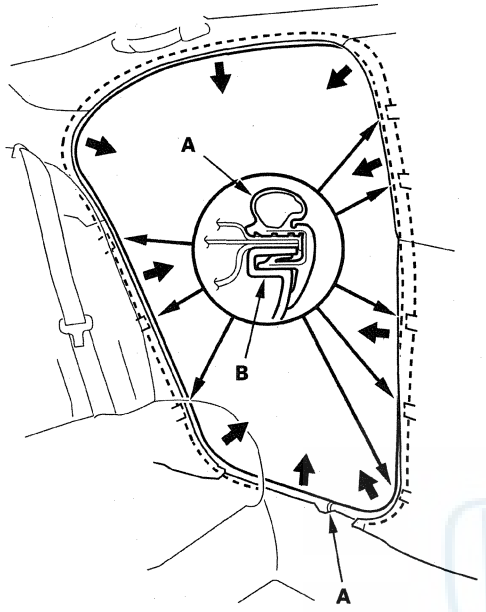

4. Install the trim in the reverse order of removal, and note these items:

   - If the clips are damaged or stress-whitened, replace them with new ones.
   - Push the clips and the hooks into place securely.

Trim Removal/Installation - Pillar Areas

Special Tools Required
KTC trim tool set SOJATP2014 *
* Available through the Acura Tool and Equipment Program; 888-424-6857

A-Pillar Trim

SRS components are located in this area. Review the SRS component locations (see page 24-12) and the precautions and procedures (see page 24-14) before doing repairs or service.

NOTE:
- If the side airbags and/or side curtain airbags have deployed, the affected pillar area trim and attachment clips must be replaced. Refer to Component Replacement/Inspection After Deployment (see page 24-194).
- Follow the A-pillar trim installation procedure carefully; improper installation could cause the side curtain airbags to deploy improperly and possibly cause injury.
- Put on gloves to protect your hands.
- Use the appropriate tool from the KTC trim tool set to avoid damage when removing components.
- Take care not to scratch the trim and the panels.
- The upper clip in the A-pillar trim (A) consists of a plastic grommet (B) and a metal pin (C). The groove (D) in the grommet secures it to the body panel (E). The shoulder (F) on the grommet is broken during removal, so the grommet must be replaced with a new one when the trim is reinstalled.

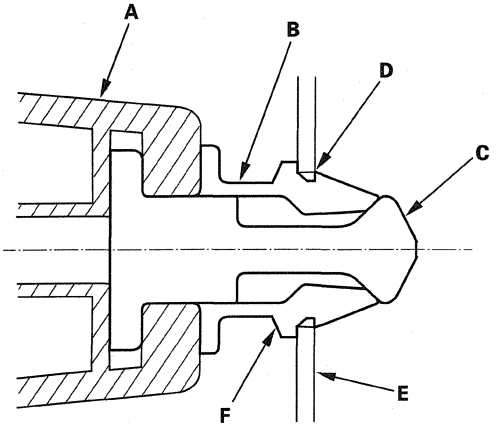

(cont'd)

Trim Removal/Installation - Pillar Areas (cont'd)

1. Pull the front door opening trim away from the A-pillar as needed (see step 4 on page 20-68).

2. Hit the upper clip with a rubber mallet. The clip is under the "SIDE CURTAIN AIRBAG" mark (A) near the top of the A-pillar trim (B). Hitting the clip breaks the shoulder (C) on the grommet (D) and pushes the pin (E) into the grommet on the body (F).

   NOTE: The grommet must be replaced with a new one when the A-pillar trim is reinstalled.

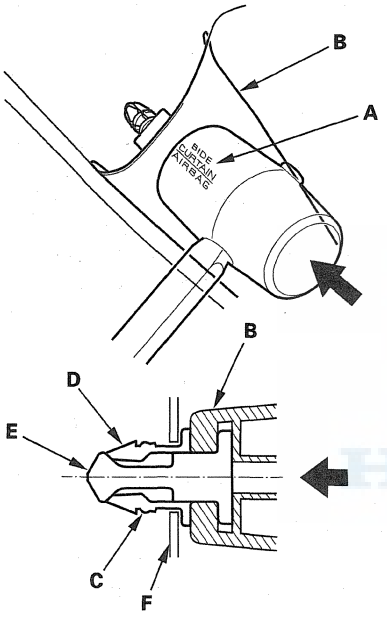

3. Pull the top of the A-pillar trim (A) back by hand to remove the pin (B) from the grommet (C) which remains in the body (D).

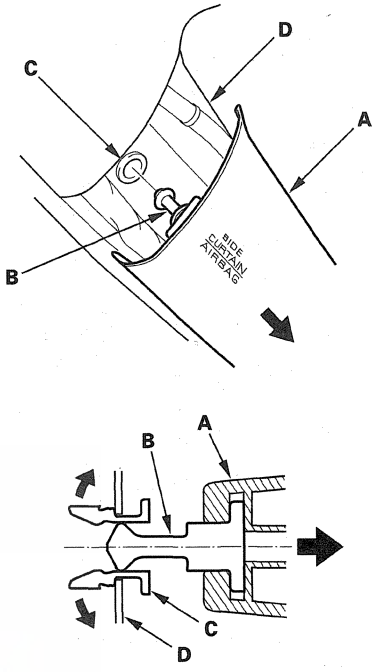

4. Remove the A-pillar trim (A) by hand to detach the remaining clips, then pull the trim up from the dashboard (B).

Fastener Locations

▷: **Clip, 3 (White)**

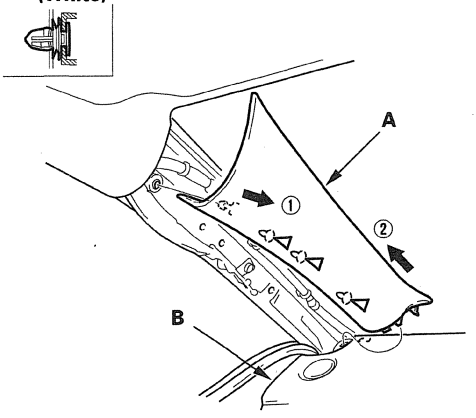

5. Remove the grommet from the body.

   NOTE: The upper clip grommet must be replaced with a new one because the grommet is damaged during removal, and should not be reused.

6. If the side curtain airbag has been deployed, replace the A-pillar trim with a new one.

7. If the side curtain airbag has not deployed, check the A-pillar trim (A) and not the following items:

   - To prevent the side curtain airbags from deploying improperly and possibly causing injury, inspect the A-pillar trim and replace it if it has any of these types of damage:
     - Any cracks, deformations, or stress-whitened areas in the A-pillar trim
     - Any cracks or stress-whitening in the clip and the pin seating surfaces (B)
     - Damaged top of the upper clip pin (C)
   - Replace the upper clip grommet with a new one because it is damaged during removal.
   - If the clips are damaged or stress-whitened, replace them with new ones.

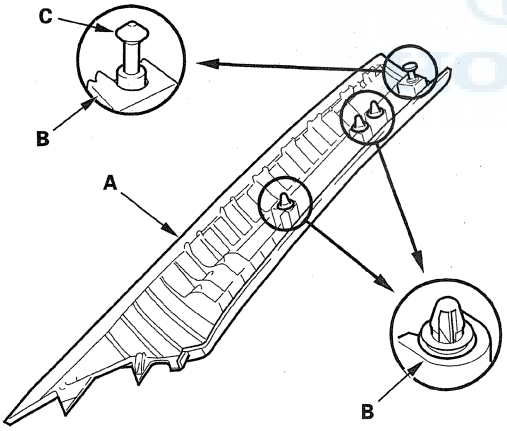

8. Before installing the A-pillar trim (A), carefully remove the grommet (B) from the pin (C) on the new upper clip.

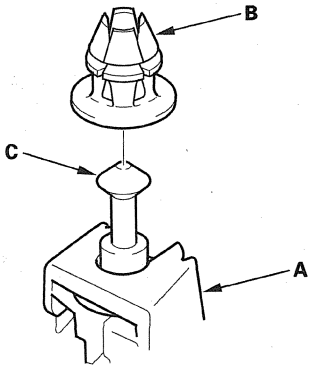

9. Check the overlap between the headliner and A-pillar trim, and if necessary, adjust it (see page 24-196).

10. Carefully reinstall the grommet (A) on the pin (B) and seat them on the A-pillar trim (C) as shown.

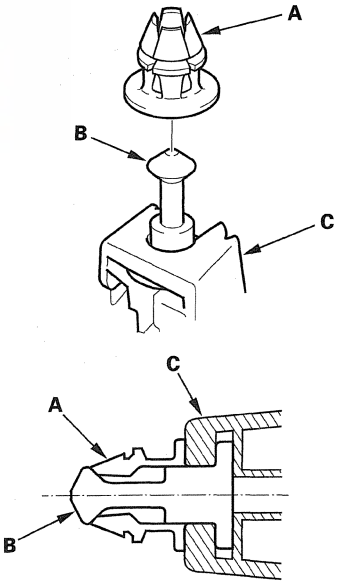

(cont'd)

Trim Removal/Installation - Pillar Areas (cont'd)

11. Reinstall the A-pillar trim (A).

    -1 Insert the bottom of the trim into the dashboard (B).
    -2 Place the trim over the A-pillar (C), and fit its upper clip (D) and the other clips into holes (E) in the A-pillar, then lightly push the trim into place.

    NOTE:
    - Make sure the side curtain airbag is not tucked down under the clips and ribs.
    - Push lightly on the upper clip. If you push too hard, the clip will be damaged, and it will not hold the trim properly.

Fastener Locations

▷: Clip, 3 (White)

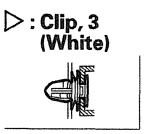

12. Reinstall the front door opening trim.

Special Tools Required
KTC trim tool set SOJATP2014 *
* Available through the Acura Tool and Equipment Program; 888-424-6857

B-Pillar Lower Trim

SRS components are located in this area. Review the SRS component locations (see page 24-12) and the precautions and procedures (see page 24-14) before doing repairs or service.

NOTE:
- If the side airbags and/or side curtain airbags have deployed, the affected pillar area trim and attachment clips must be replaced. Refer to Component Replacement/Inspection After Deployment (see page 24-194).
- Put on gloves to protect your hands.
- Take care not to bend or scratch the trim and the panels.
- Use the appropriate tool from the KTC trim tool set to avoid damage when removing components.

1. Remove these items:

    - Front door sill trim (see page 20-67)
    - Rear door sill trim (see page 20-68)
    - Front door opening trim, as needed (see step 4 on page 20-68)
    - Rear door opening trim, as needed (see step 3 on page 20-69)

2. Slide the front seat forward fully.

3. Remove the B-pillar lower trim (A).

   1. Pull the upper portion of the trim back to release the upper hooks (B).
   2. Detach the lower clips by pulling the bottom of the trim back by hand.

Fastener Locations

▷: Clip, 2 (White)

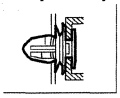

4. Install the trim in the reverse order of removal, and note these items:

   - If the clips (A) are damaged or stress-whitened, replace them with new ones.
   - To prevent the side curtain airbags from deploying improperly and possibly causing injury, inspect the trim and replace it if it has any of these types of damage:
     - Any cracks or deformations in the B-pillar lower trim (B), and any damage to the area (C) that fits into the B-pillar upper trim
     - Any cracks or stress-whitening in the clip seating surfaces (D)
   - Replace any damaged part with a new one.
   - Push the clips into place securely.

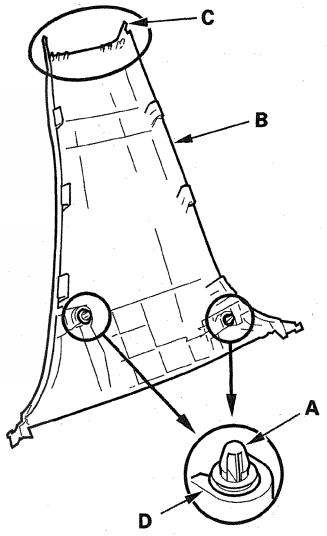

HONDA

Trim Removal/Installation - Pillar Areas (cont'd)

Special Tools Required
KTC trim tool set SOJATP2014 *
* Available through the Acura Tool and Equipment Program; 888-424-6857

B-Pillar Upper Trim

SRS components are located in this area. Review the SRS component locations (see page 24-12) and the precautions and procedures (see page 24-14) before doing repairs or service.

NOTE:
- If the side airbags and/or side curtain airbags have deployed, the affected pillar area trim and attachment clips must be replaced. Refer to Component Replacement/Inspection After Deployment (see page 24-194).
- Put on gloves to protect your hands.
- Take care not to bend or scratch the trim and the panels.
- Use the appropriate tool from the KTC trim tool set to avoid damage when removing components.

1. Remove these items:
   - Front door opening trim, as needed (see step 4 on page 20-68)
   - Rear door opening trim, as needed (see step 3 on page 20-69)
2. Remove the front seat belt lower anchor (see page 24-4).
3. Pull the upper portion of the B-pillar lower trim (A) back to release the upper hooks (B).

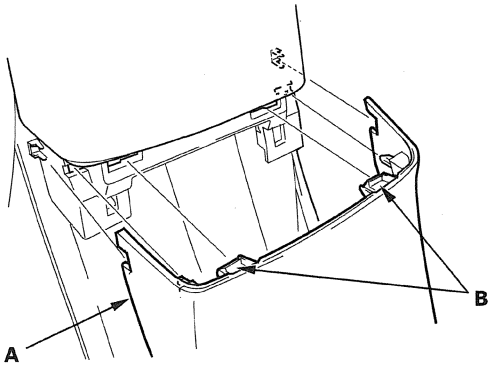

4. Remove the B-pillar upper trim (A).
   1. Pull the bottom of the trim back by hand to detach the lower hooks (B).
   2. Detach the upper clip by pu lling the top of the trim.
   3. Pull the trim down to release the upper hook (C) from the side curtain airbag B-pillar bracket.
   4. Pass the front seat belt (D) lower anchor out through a hole in the slider (E).

Fastener Location
▷ : Clip, 1 (Pink)

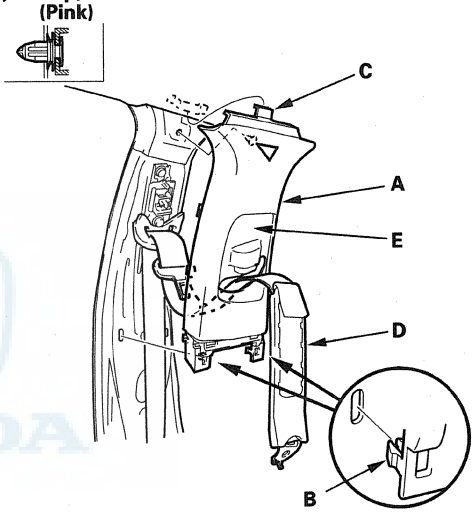

5. Remove the B-pillar upper trim (A).

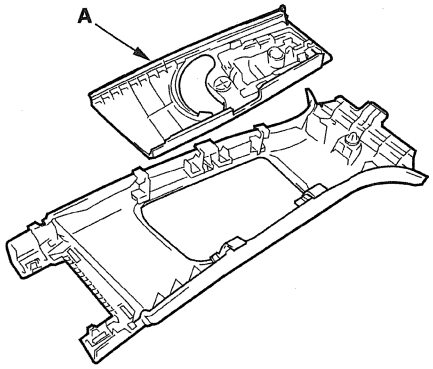

6. Install the trim in the reverse order of removal, and note these items:

- If the clip (A) is damaged or stress-whitened, replace it with a new one.
- If the side curtain airbag has deployed, replace the B-pillar upper trim with a new one.
- To prevent the side curtain airbags from deploying improperly and possibly causing injury, inspect the trim, and replace it if it has any of these types of damage:
  - Any cracks or deformations in the B-pillar upper trim (B) and the upper hook (C), and any stress-whitenings in the upper part of the trim
  - Any cracks or stress-whitening in the clip seating surface (D)
- Replace any damaged parts with new ones.
- Make sure the top of the trim overlaps with the headliner correctly (see page 24-196).
- Make sure the pin (E) on the front seat belt shoulder anchor adjuster (F) and the hole (G) on the back of the slider are engaged when installing the B-pillar upper trim.
- Make sure the trim hook is installed into the side curtain airbag B-pillar bracket securely.
- Push the clip and the hooks into place securely.
- Before installing the anchor bolt, make sure there are no twists or kinks in the seat belt.

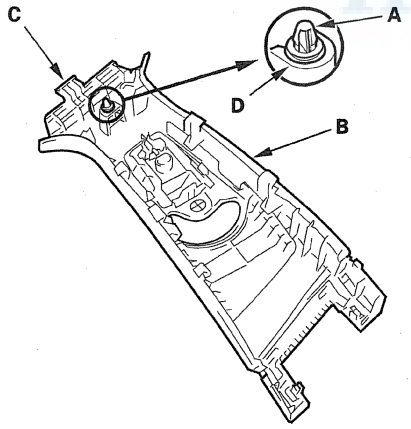

Slider engagement with shoulder anchor adjuster

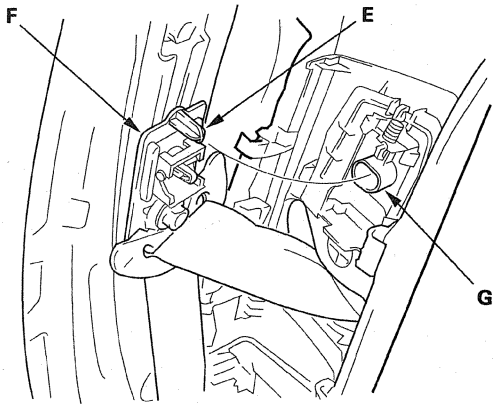

HONDA

Trim Removal/Installation - Pillar Areas (cont'd)

Special Tools Required
KTC trim tool set SOJATP2014 *
* Available through the Acura Tool and Equipment Program; 888-424-6857

C-Pillar Trim

SRS components are located in this area. Review the SRS component locations (see page 24-12) and the precautions and procedures (see page 24-14) before doing repairs or service.

NOTE:
- If the side airbags and/or side curtain airbags have deployed, the affected pillar area trim and attachment clips must be replaced. Refer to Component Replacement/Inspection After Deployment (see page 24-194).
- Follow the C-pillar trim installation procedure carefully; improper installation could cause the side curtain airbags to deploy improperly, and possibly cause injury.
- Put on gloves to protect your hands.
- Take care not to bend or scratch the trim and the panels.
- Use the appropriate tool from the KTC trim tool set to avoid damage when removing components.
- The upper clip in the C-pillar trim (A) consists of a plastic grommet (B) and a metal pin (C). The groove (D) in the grommet secures it to the body panel (E). The shoulder (F) on the grommet is broken during removal, so the grommet must be replaced with a new one when the trim is reinstalled.

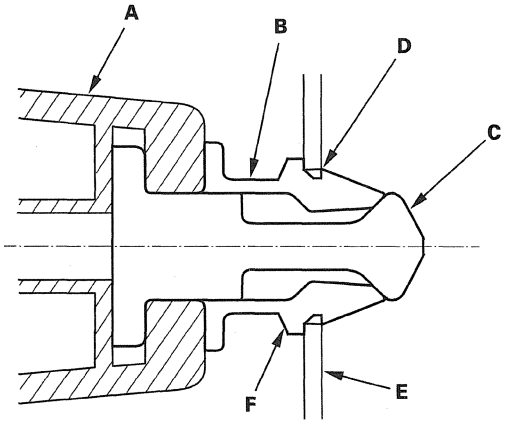

1. Remove these items:
   - Rear seat cushion (see page 20-140)
   - Rear seat-back (see page 20-140)
   - Rear door sill trim (see page 20-68)
   - Rear door opening trim, as needed (see step 3 on page 20-69)

2. Release the upper hook (A) from the C-pillar trim (B), then detach the clips by pulling the seat side trim (C) back, then remove it.

Fastener Locations
▷: Clip, 3 (White)

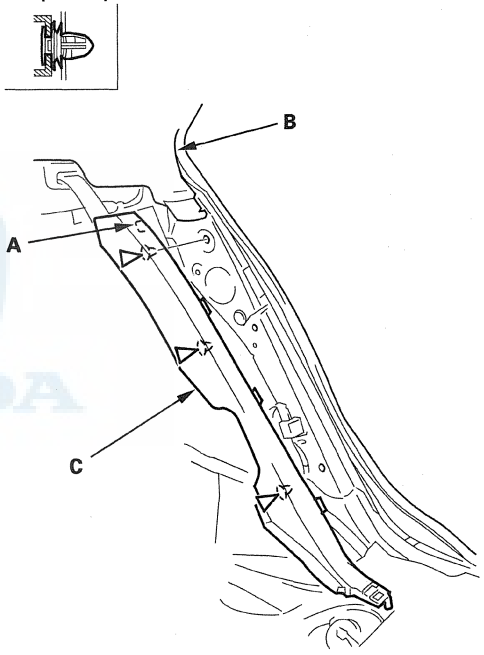

3. Hit the upper clip with a rubber mallet. The clip is under the "SIDE CURTAIN AIRBAG" mark (A) near the top of the C-pillar trim (B). Hitting the clip breaks the shoulder (C) on the grommet (D) and pushes the pin (E) into the grommet on the body (F).

   NOTE: The clip must be replaced with a new one when the C-pillar trim is reinstalled.

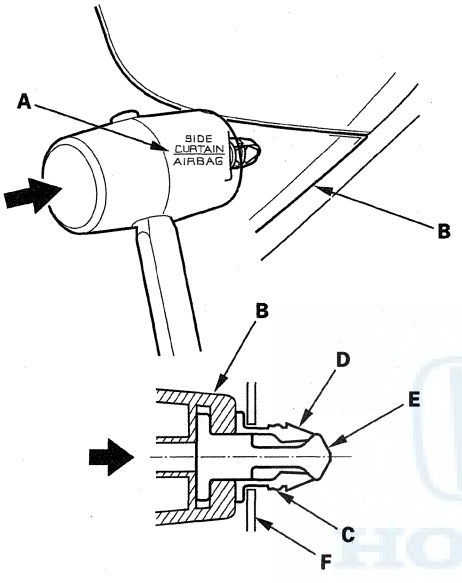

4. Pull the top of the C-pillar trim (A) back by hand to remove the pin (B) from the grommet (C) which remains in the body hole (D).

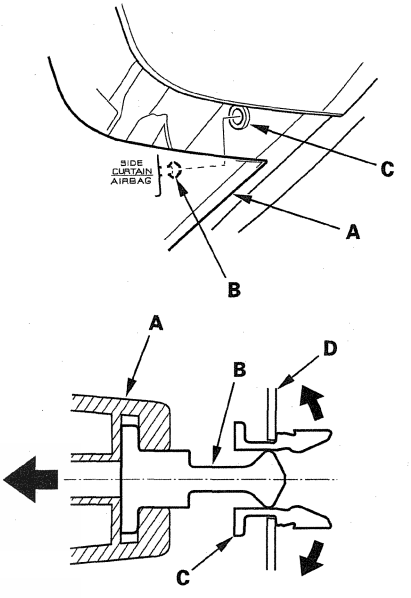

5. Pull the C-pillar trim (A) back by hand to detach the remaining clips (B, C), then remove it.

Fastener Locations

B ▷: Clip, 3 (White) **C ▷: Clip, 1 (Black)**

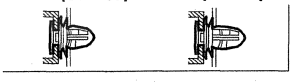

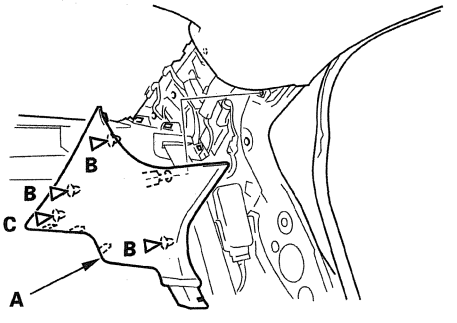

(cont'd)

Trim Removal/Installation - Pillar Areas (cont'd)

6. Remove the grommet from the body.

   NOTE: The upper clip grommet must be replaced with a new one because the grommet is damaged during removal, and should not be reused.

7. If the side curtain airbag has been deployed, replace the C-pillar trim with a new one.

8. If the side curtain airbag has not been deployed, check the C-pillar trim (A):

   - To prevent the side curtain airbags from deploying improperly and possibly causing injury, inspect the C-pillar trim and replace it if it has any of these types of damage:
     - Any cracks, deformations, or stress-whitenings
     - Any cracks or stress-whitened in the clip and the pin seating surfaces (B)
     - Damaged top of the upper clip pin (C)
   - Replace the upper clip grommet with a new one because it damaged during removed.
   - If the clips (D) are damaged or stress-whitened, replace them with new ones.

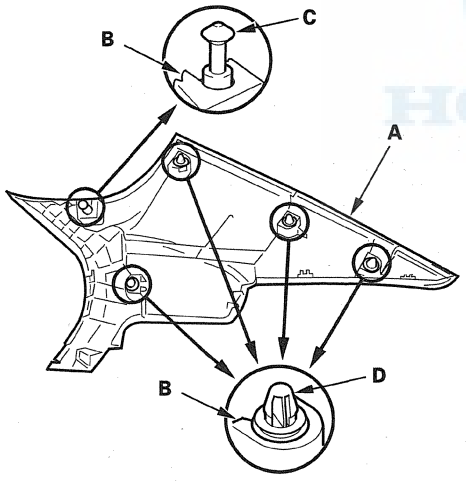

9. Before installing the C-pillar trim (A), carefully remove the grommet (B) from the pin (C) on the new upper clip.

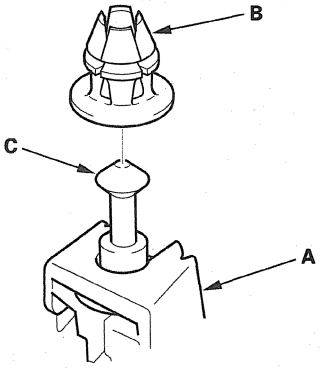

10. Check the overlap between the headliner and C-pillar trim, and if necessary, adjust it (see page 24-196).

11. Carefully reinstall the grommet (A) on the pin (B) and seat them on the C-pillar trim (C) as shown.

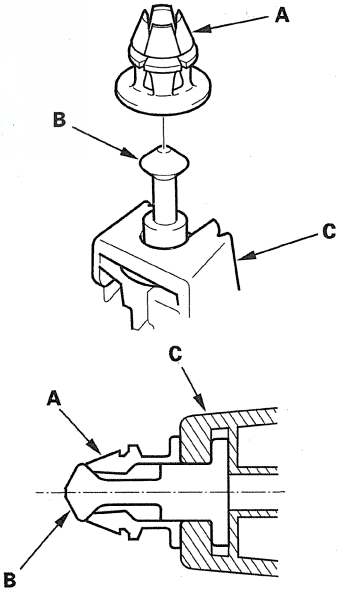

12. Place the C-pillar trim (A) over the C-pillar (B), and fit its upper clip (C) and the other clips (D, E) into holes (F) in the C-pillar, then lightly push the trim into place.

NOTE:
- Make sure the side curtain airbag is not tucked down under the clips.
- Push lightly on the upper clip. If you push too hard, the clip will be damaged, and it will not hold the trim properly.

Fastener Locations

D ▷: Clip, 3 (White) **E ▷: Clip, 1 (Black)**

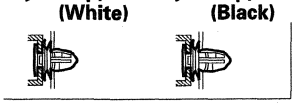

13. Reinstall the seat side trim (A). Push the clips and the hook (B) portions into place securely.

Fastener Locations

▷: Clip, 3 (White)

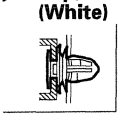

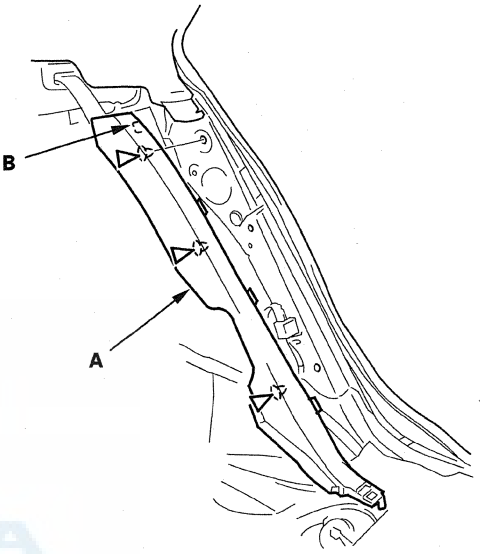

14. Reinstall all remaining removed parts.

Trim Removal/Installation - Rear Shelf Area

Special Tools Required
KTC trim tool set SOJATP2014 *
* Available through the Acura Tool and Equipment Program; 888-424-6857

SRS components are located in this area. Review the SRS component locations (see page 24-12) and the precautions and procedures (see page 24-14) before doing repairs or service.

NOTE:
- Put on gloves to protect your hands.
- Take care not to bend or scratch the trim and the panels.
- Use the appropriate tool from the KTC trim tool set to avoid damage when removing components.

1. Remove the C-pillar trim from both sides (see page 20-76).

2. Detach the clips and release the hooks (A, B, C), then remove the rear center seat belt cover (D).

Fastener Locations
▷: Clip, 2 (White)

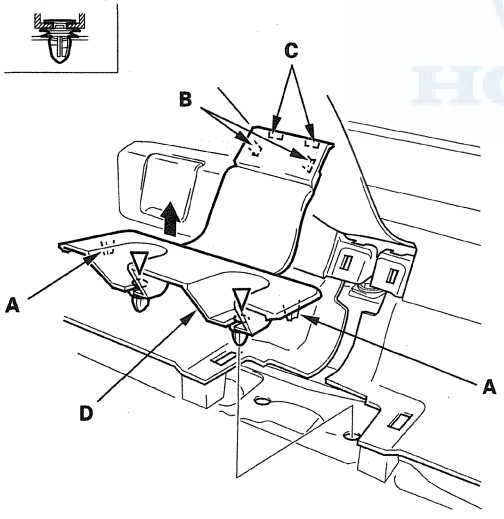

3. Remove the rear shelf (A).

-1 Pull up on the front edge of the rear shelf with a door panel tool to release the three clips (B) and the four clips (C).
-2 Pull the rear shelf up and forward to release the four hooks (D) from the rear window sunshade brackets (E).
-3 Pull both rear seat belts (F) and rear center seat belt (G) out through the slits (H) in the rear shelf.

Fastener Locations
B, C ▷: Clip, 7 (White)

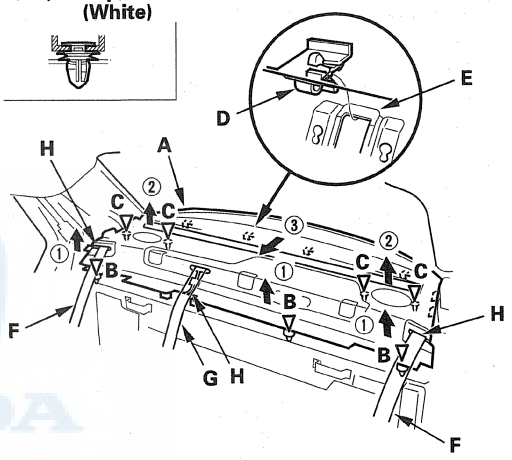

4. Install the rear shelf in the reverse order of removal, and note these items:

-1 Using a clip remover, remove any clips left in the body, and reinstall them on the rear shelf.
-2 If the clips are damaged or stress-whitened, replace them with new ones.
-3 Slip both rear seat belts and rear center seat belt through the slits in the rear shelf.
-4 Insert the hooks to the rear window sunshade bracket, and fit the clips into the holes in the body, then push on the rear shelf until the clips snap into place.
-5 Reinstall all remaining removed parts.

Rear Window Sunshade Removal/Installation

NOTE:
- Put on gloves to protect your hands.
- Take care not to hit the rear window when removing or loosing the bolts.
- Take care not to scratch the trim and panels.

1. Remove the rear shelf (see page 20-80).

2. Disconnect the rear window sunshade control unit connector (A). Remove the two nuts (B), and loosen the four nuts (C) securing the rear window sunshade.

Fastener Locations

B, C ● : Nut, 6

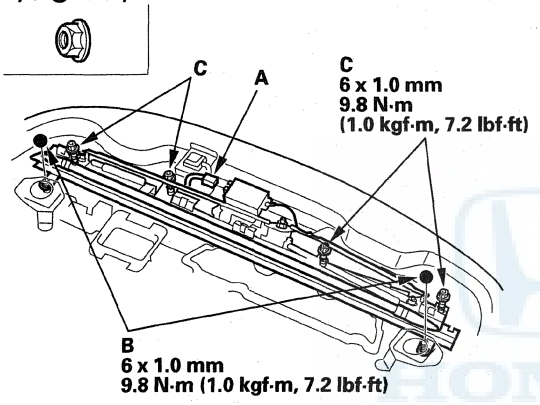

3. While lifting at the front edge of the rear window sunshade (A), slide it forward, then remove it. Do not catch the screen portion (B) while removing the sunshade.

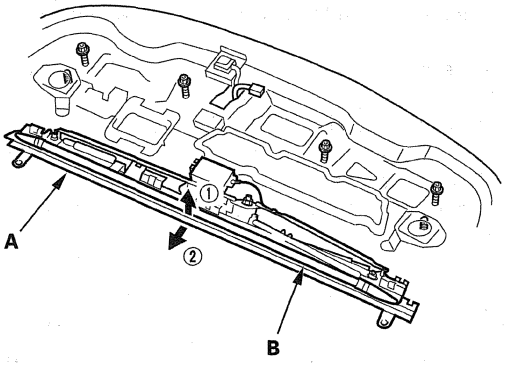

4. Install the sunshade in the reverse order of removal, and note these items:

- Be sure there is no gap between the bracket and the rear parcel shelf, then tighten the mounting nuts securely.
- Make sure the control unit connector is plugged in properly.
- Check the rear window sunshade operation.

HONDA

Rear Window Sunshade Disassembly/Reassembly

NOTE:
- Put on gloves to protect your hands.
- Take care not to scratch the sunshade screen and related parts.

1. Remove the left arm holder from the screen plate, and remove the screws from the left screen holder, then slide the screen completely out of the screen base (NOTE: It is pre-loaded).

2. Reassemble in the reverse order of disassembly, and note these items:

   - Before attaching the screen holder to the screen base, rotate the left screen holder five times clockwise to pre-load the screen, then attach the screen holder and the arm holder while maintaining the pre-load.
   - Be sure the ground lead is installed securely.
   - Apply multipurpose grease to each pivoting portion of the sunshade as shown.

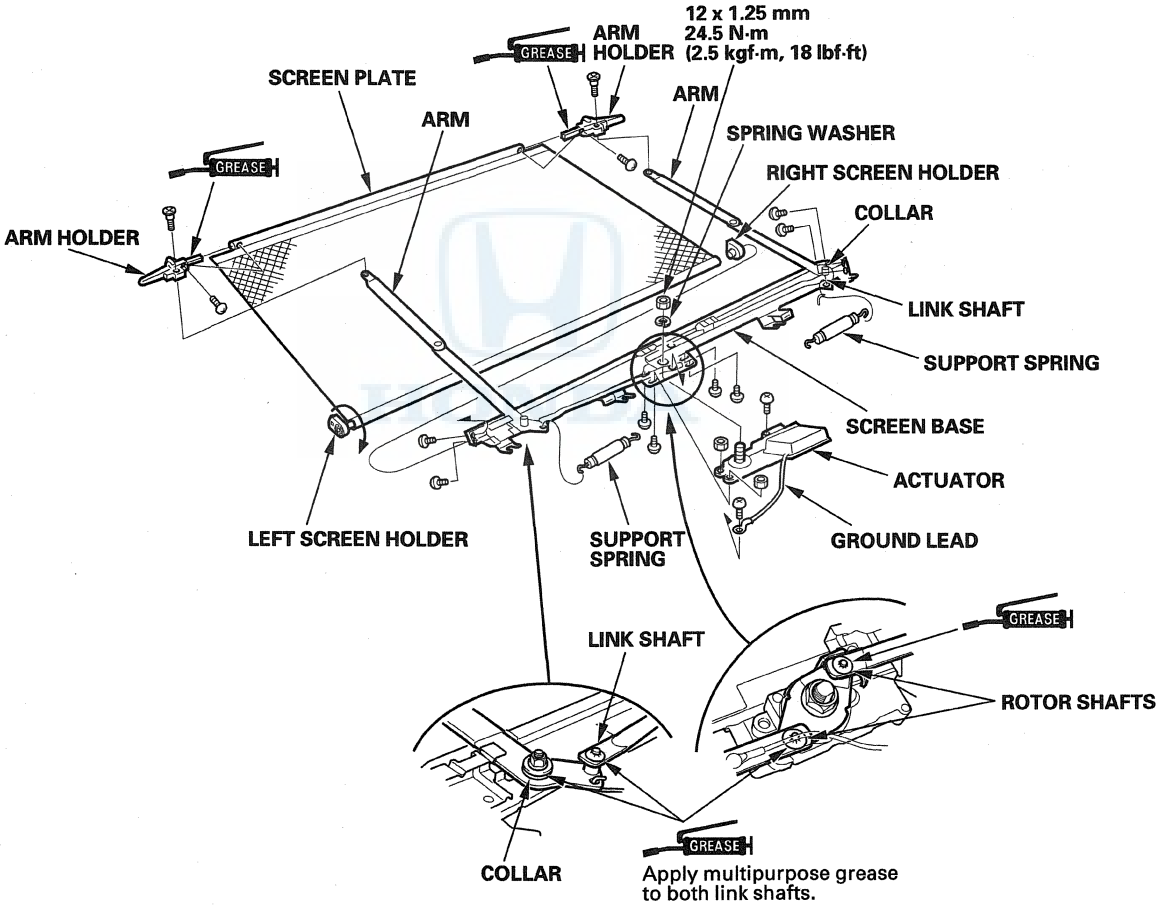

Trim Removal/Installation - Trunk Area

Special Tools Required
KTC trim tool set SOJATP2014 *
* Available through the Acura Tool and Equipment Program; 888-424-6857

NOTE:
- Put on gloves to protect your hands.
- Take care not to bend or scratch the trim and the panels.
- Use the appropriate tool from the KTC trim tool set to avoid damage when removing components.

1. Remove the trunk floor lid (A) and the trunk floor spacer (B).

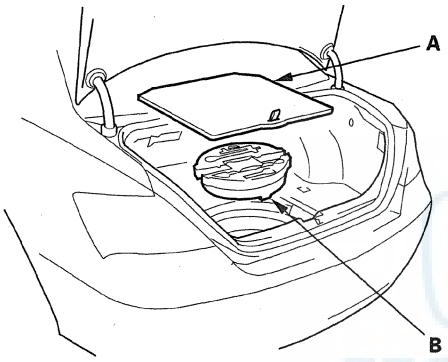

2. Detach the clips, and release the hooks (A) by pulling the trunk rear trim panel (B) up, then remove it.

Fastener Locations
▷: Clip, 4 (White)

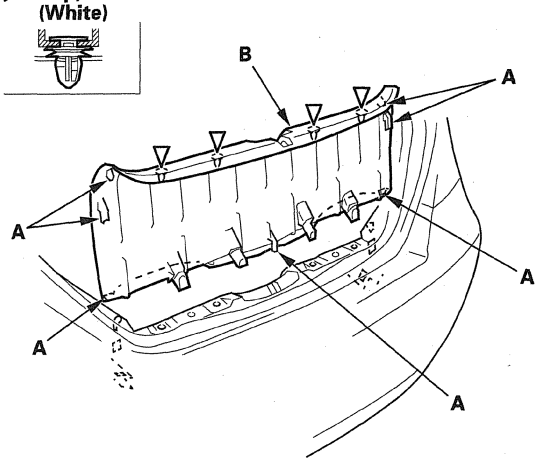

3. Release the clips (A, B) and the velcro fasteners (C), then remove the trunk front trim panel (D).

Fastener Locations
A ▷: Clip, 2 B ▷: Clip, 2

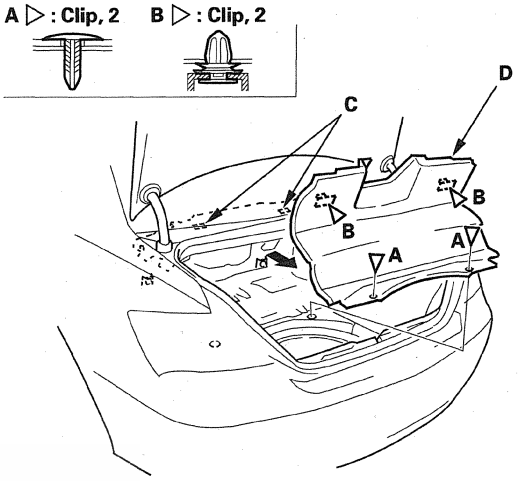

4. Remove the tie down hooks (A) and the trunk hooks (B) from both trunk side trim panels.
   1. Pry out the lids (C) with a trim tool, then remove all of the tie down hooks by unscrewing them.
   2. Pry out the caps (D) with a trim tool, then remove both trunk hooks by pulling them out.

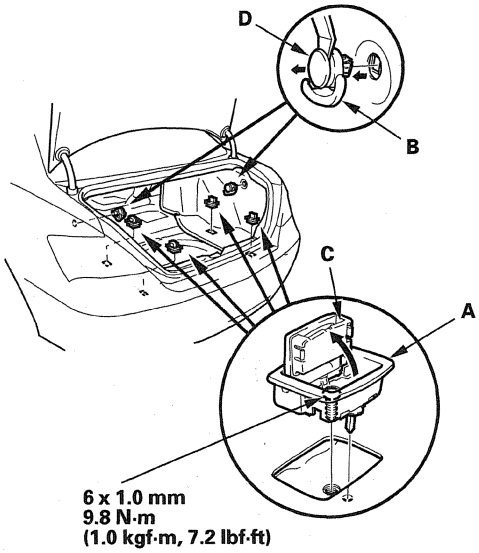

(cont'd)

Trim Removal/Installation - Trunk Area (cont'd)

5. Detach the clips, then remove the left trunk side trim panel (A) and the right trunk side trim panel (B) from the trunk compartment.

Fastener Locations

▷: Clip, 4 (Orange)

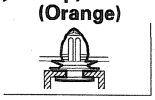

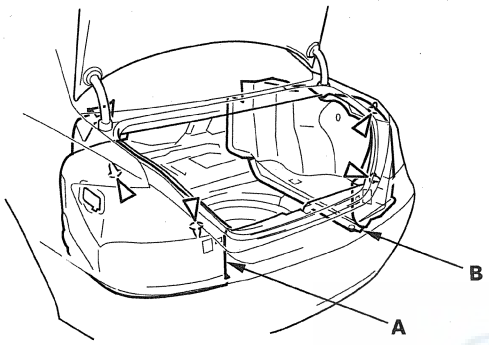

6. Remove the trunk light (see page 22-313).

7. Lower the trunk upper trim panel (A) to detach the clips (B), and detach the clips (C) from the navigation unit bracket (D), then remove the panel from the trunk compartment.

Fastener Locations

B ▷: Clip, 7 (White) C ▷: Clip, 2

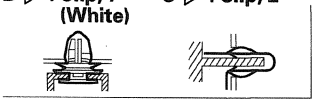

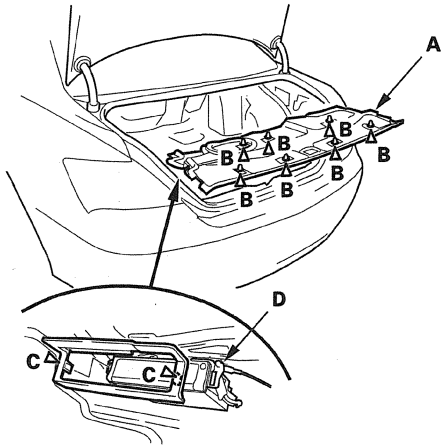

8. Install the trim in the reverse of removal, and note these items:

- If the clips are damaged or stress-whitened, replace them with new ones.
- Push the clips into place securely.

Trim Removal/Installation - Trunk Lid

Special Tools Required
KTC trim tool set SOJATP2014 *
* Available through the Acura Tool and Equipment Program; 888-424-6857

NOTE:
- Put on gloves to protect your hands.
- Use the appropriate tool from the KTC trim tool set to avoid damage when removing components.
- Take care not to bend or scratch the trim and the panels.

1. Remove the trunk light (see page 22-313).

2. Pull up on the outside ends of the trunk lid cushions (A), slide them to the outside, and pull them out.

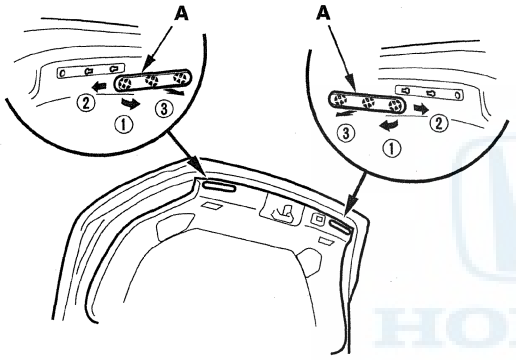

3. Detach all the clips, then remove the trunk lid trim (A).

Fastener Locations
▷: **Clip, 8 (White)**



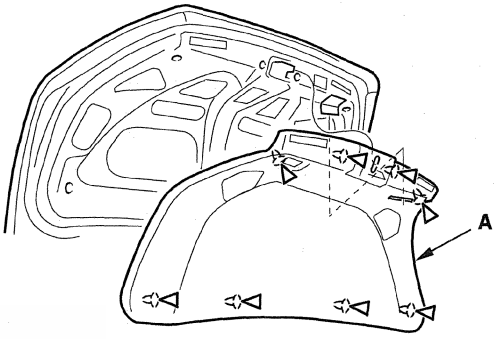

4. If necessary, pivot the trunk lid handle (A) down on the forward hooks (B) while prying the rear hook (C), then remove the handle.

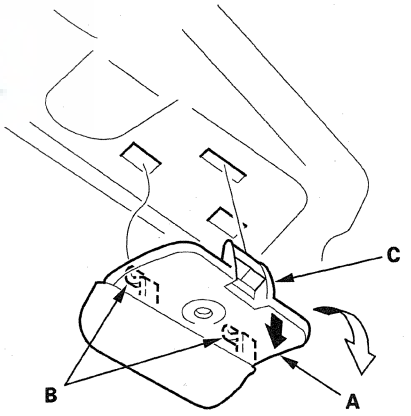

5. Install the trim in the reverse order of removal, and note these items:

   - If the clips are damaged or stress-whitened, replace them with new ones.
   - Push the clips into place securely.

Headliner Removal/Installation

Special Tools Required
KTC trim tool set SOJATP2014 *
* Available through the Acura Tool and Equipment Program; 888-424-6857

SRS components are located in this area. Review the SRS component locations (see page 24-12) and the precautions and procedures (see page 24-14) before doing repairs or service.

NOTE:
- Use the appropriate tool from the KTC trim tool set to avoid damage when removing components.
- When prying with a flat-tip screwdriver, wrap it with protective tape to prevent damage.
- Take care not to bend or scratch the headliner.
- Be careful not to damage the dashboard and other interior trim.

1. Remove these items:
   - A-pillar trim, both sides (see page 20-69)
   - Roof console (see page 22-307)
   - Front individual map light (see page 22-308)
   - Rear individual map light (see page 22-309)
   - B-pillar upper trim, both sides (see page 20-74)
   - C-pillar trim, both sides (see page 20-76)

2. From both sides, using a trim tool, release the tabs (A), then turn the sunvisor cap (B), and remove it from the bracket (C).

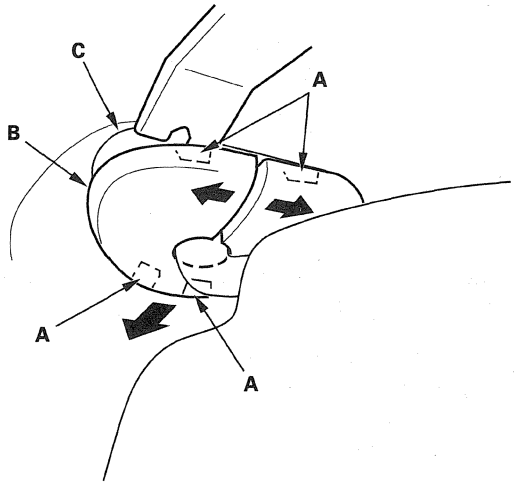

3. From both sides, remove the sunvisor (A) and holder (B).
   1. Remove the self-tapping ET screws.
   2. Remove the sunvisor from the body and the holder.
   3. If equipped, disconnect the vanity mirror light connector (C).
   4. Using a flat-tip screwdriver, push the hook (D), turn the holder 90 °, and then pull it out.

Fastener Locations
▶ : Screw, 2

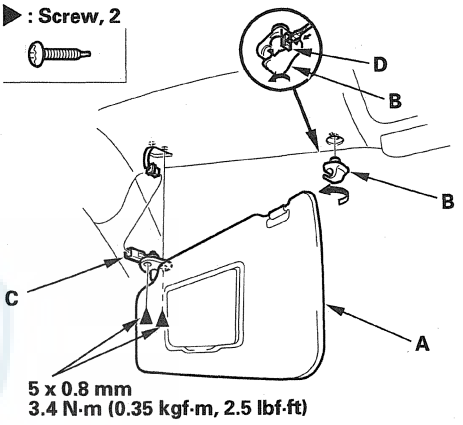

4. Remove the caps (A), and remove the screws, then remove the grab handles (B).

Fastener Locations
▶ : Screw, 8

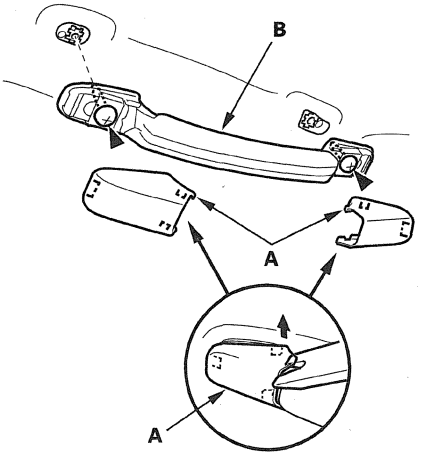

5. Remove the clips, then remove the high mount brake light cover (A).

Fastener Locations

▷: **Clip, 4**

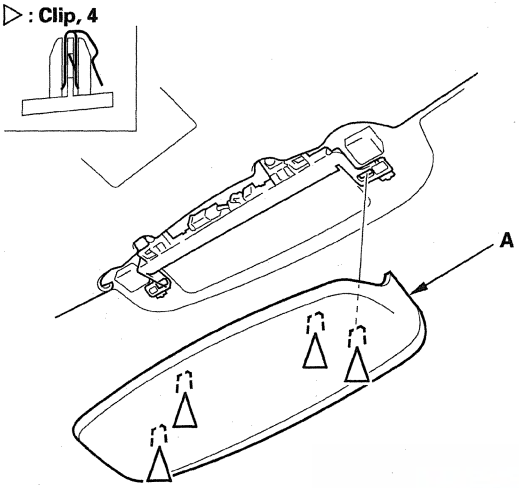

6. Remove the headliner (A).

-1 Pull the front door opening trim (B) and the rear door opening trim (C) away from the headliner.
-2 Detach the rear clips by pulling the rear portion of the headliner down.
-3 With the help of an assistant, release the Velcro fasteners (D) by pulling the front portion of the headliner down, and release the headliner from the moonroof frame (E) by sliding the headliner rearward, and lowering it.
-4 Lower the headliner.

NOTE: Wire harness and antenna lead on the headliner are not shown in this illustration.

Fastener Locations

▷: **Clip, 2**

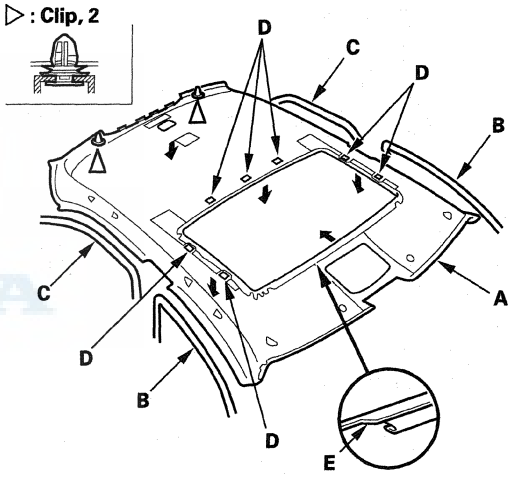

(cont'd)

Headliner Removal/Installation (cont'd)

7. Remove the aluminum seals and disconnect the front microphone connectors (A), rear microphone connectors (B), and the moonroof subharness connector (C), then remove the antenna lead (D) and the roof wire harness (E) from the headliner (F).

Fastener Locations

▷ : **Aluminum seal, 31**

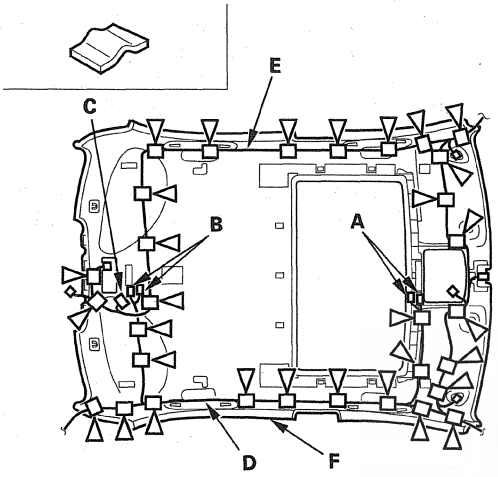

8. Remove the headliner through the front passenger's door opening. Take care not to bend or scratch the headliner.

9. If necessary, remove the clips (A) from the grab handle brackets (B).

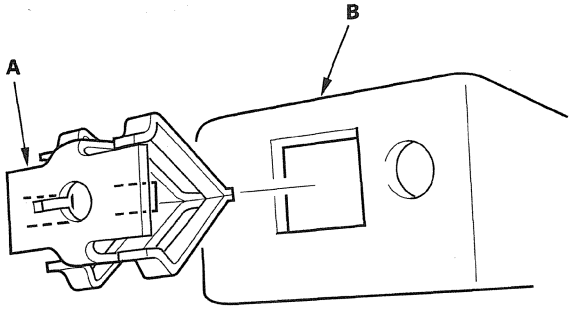

10. If necessary, remove the bolts, then remove the roof console bracket (A) by releasing two hooks (B).

Fastener Locations

▶ : **Bolt, 4**

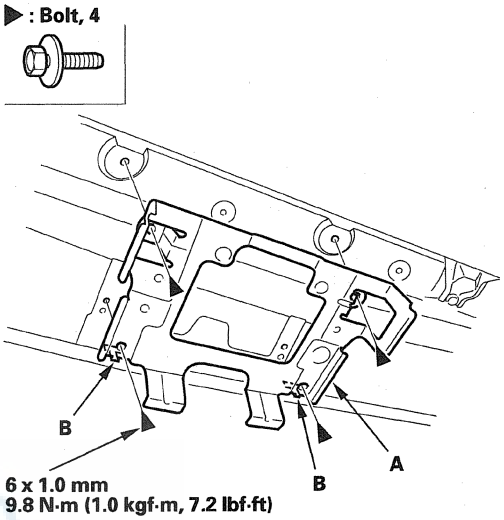

11. Install the headliner in the reverse order of removal, and note these items:

- If the side curtain airbag has been deployed, replace the headliner, sunvisor on deployed side, and grab handle on deployed side with new ones (see page 24-194).
- To prevent the side curtain airbags from deploying improperly and possibly causing injury, inspect the A-pillar trim, and replace it if it has any of these types of damage:
  - Any creases or tears in the headliner (A)
  - Any fasteners (B) or clip bases (C) which have come off the headliner
  - Any damage around the grab handle holes (D) or sunvisor holes (E) in the headliner
  - Any deformations in the grab handle (F)
  - Any cracks in the sunvisor stay base (G)
  - Any bends or cracks in the sunvisor stay shaft (H)
  - Any cracks in the sunvisor base (I)
  - Any cracks in the vanity mirror base (J)
  - Any deformations in the grab handle bracket
- Replace any damaged parts with new ones.
- Replace the removed aluminum seals with new ones.
- Make sure the grab handle clips (K) are installed securely to the grab handle bracket (L).
- Make sure the headliner overlaps the trim pieces correctly (see page 24-196).
- When passing the headliner through the door opening, be careful not to fold or bend it. Also, be careful not to scratch the body.
- If the threads on a visor screw are worn out, use an oversized self-tapping ET screw made specifically for this application.
- Check that both sides of the headliner are securely attached to the trim.

NOTE: Refer to the Parts Catalog if you need to use an ET screw.

Headliner

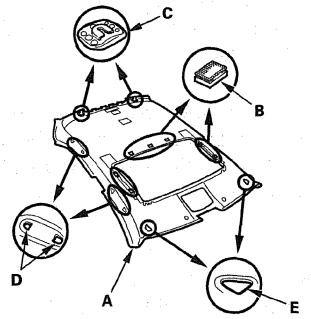

Grab handle

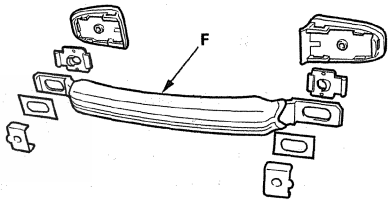

Sunvisor

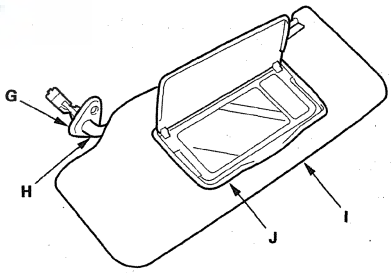

Grab handle bracket

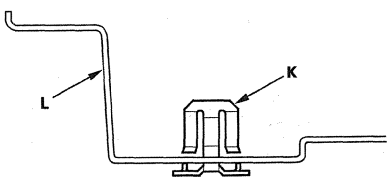

Carpet Replacement

Special Tools Required
KTC trim tool set SOJATP2014 *
* Available through the Acura Tool and Equipment Program; 888-424-6857

SRS components are located in this area. Review the SRS component locations (see page 24-12) and the precautions and procedures (see page 24-14) before doing repairs or service.

NOTE:
- Put on gloves to protect your hands.
- Use the appropriate tool from the KTC trim tool set to avoid damage when removing components.
- Take care not to damage, wrinkle or twist the carpet.
- Be careful not to damage the dashboard or other interior trim pieces.

1. Remove these items:
   - Front seats, both sides (see page 20-114)
   - Rear seat cushion (see page 20-140)
   - Front door sill trim, both sides (see page 20-67)
   - Rear door sill trim, both sides (see page 20-68)
   - B-pillar lower trim, both sides (see page 20-72)
   - Kick panel, both sides (see page 20-67)
   - Center console (see page 20-92)
   - Shift lever bracket (see page 14-230)

2. Detach the clips, then remove the footrest (A).

Fastener Locations
▷: Clip, 2 (Black)

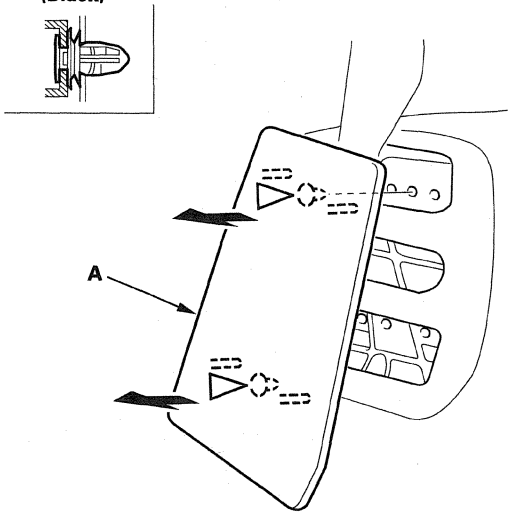

3. Push the knob (A) back to release the hooks (B), then pull up the accelerator pedal (C).

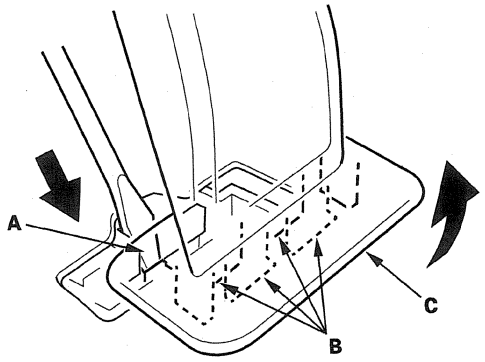

4. Remove the bolts, then remove the rear vent duct C (A).

Fastener Locations
▶: Bolt, 3

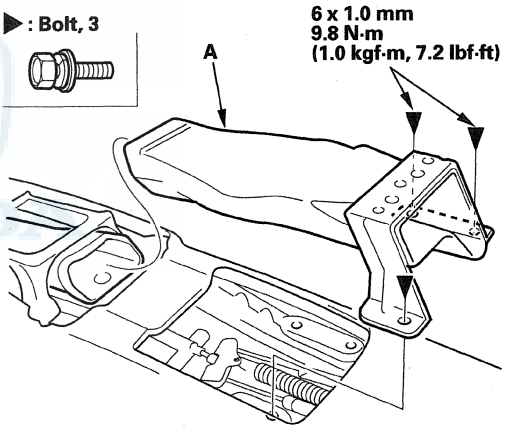

5. Detach the clips on both sides of the carpet (A). Pull the velcro fastener (B) out, and pull out the carpet from under the plate (C), then remove the carpet.

Fastener Locations

▷: Clip, 8 (White)

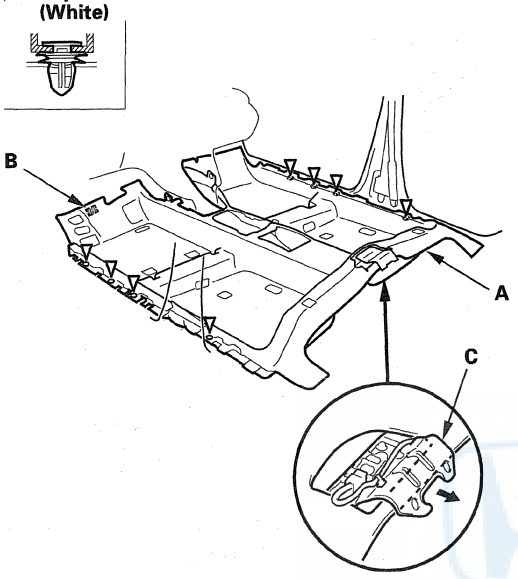

6. Install the carpet in the reverse order of removal, and note these items:

- Take care not to damage, wrinkle or twist the carpet.
- Make sure the seat harnesses and the antenna lead are routed correctly.
- If the clips are damaged or stress-whitened, replace them with new ones.
- If necessary, adjust the shift cable (see page 14-238).

Center Console Removal/Installation

Special Tools Required
KTC trim tool set SOJATP2014 *
* Available through the Acura Tool and Equipment Program; 888-424-6857

SRS components are located in this area. Review the SRS component locations (see page 24-12) and the precautions and procedures (see page 24-14) before doing repairs or service.

NOTE:
- Use the appropriate tool from the KTC trim tool set to avoid damage when removing components.
- Take care not to scratch the front seat, dashboard, and related parts.
- Put on a pair of clean cotton gloves so as not to put any fingermarks on sueded surfaces of the panels during removal/installation.

1. Detach the clips by pulling the center console panel (A) up. Disconnect the seat heater switch connectors, or seat ventilation switch connectors (B), and accessory socket connector (C).

Fastener Locations
▷: Clip, 4

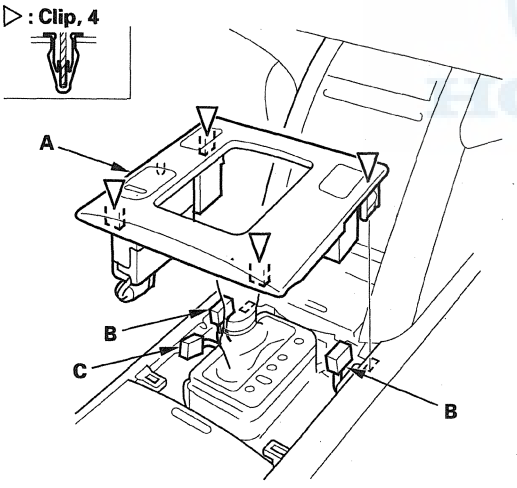

2. Remove the center console trim (A).

-1 Open the console armrest.
-2 Open the beverage holder lid (B), pull the front portion of the trim up by hand to detach the clips and the hooks (C), then remove it.

Fastener Locations
▷: Clip, 2

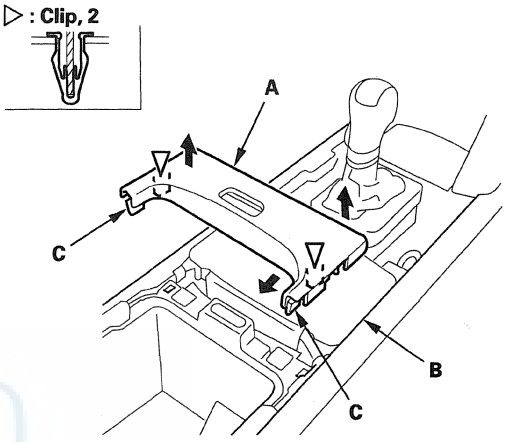

3. Pull the beverage holder (A) up by hand to detach the clips (B, C), then remove it.

Fastener Locations
B ▷: Clip, 2 C ▷: Clip, 2

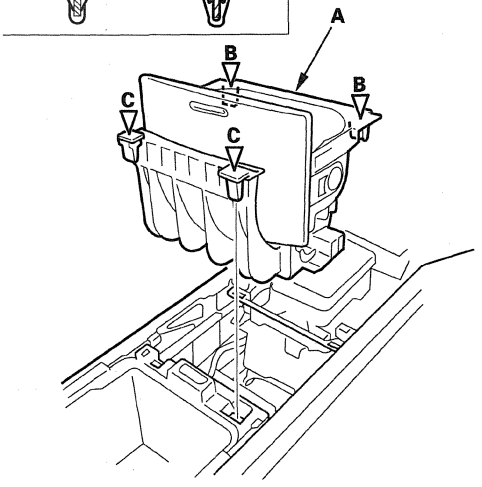

4. Remove the accessory trim (A).

   -1 Remove the console box mat (B).
   -2 Remove the screws and release the hooks (C), then remove the trim.
   -3 Disconnect the rear accessory power socket connector (D), auxiliary jack connector (E), ambient light connector (F), and the USB jack connector (G).

Fastener Locations

▶ : Screw, 4

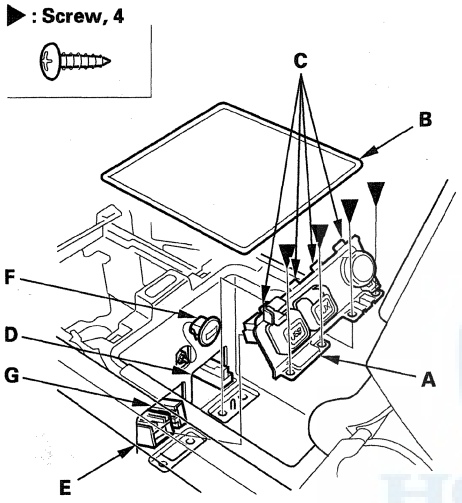

5. Detach the clips by pulling the driver's front console cover (A) and the passenger's front console cover (B) out, and pull them backward to release their pins (C) from the heater unit, then remove them.

Fastener Locations

▷ : Clip, 14

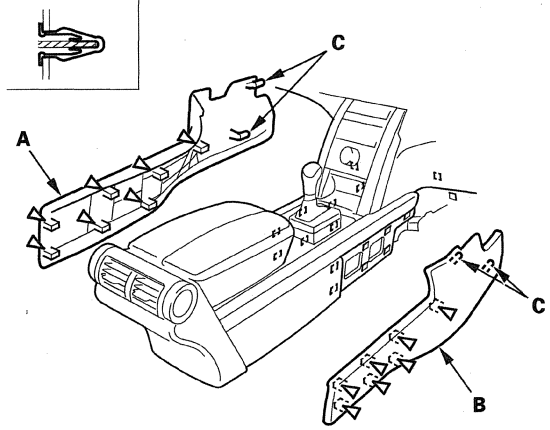

6. Remove the center console (A).

   -1 Disconnect the subharness connector (B), and detach it from the vent duct.
   -2 Remove the bolts (C, D).
   -3 Pull out the console backward, then remove it.

   NOTE: Take care not to deform the rear vent duct (E) while removing and storing the console.

Fastener Locations

C ▶ : Bolt, 4 D ▶ : Bolt, 4

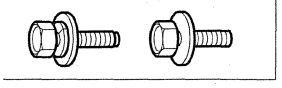

6 x 1.0 mm
9.8 N·m
(1.0 kgf·m, 7.2 lbf·ft)

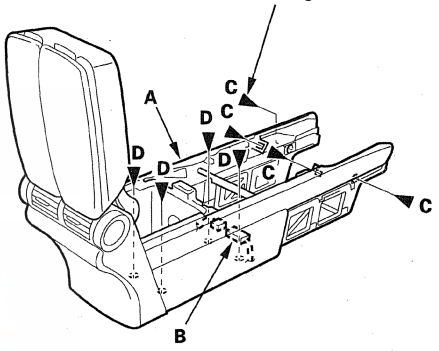

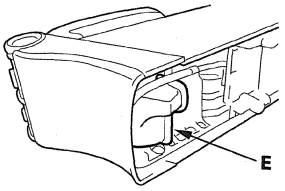

7. Install the console in the reverse order of removal, and note these items:

   - If the clips are damaged or stress-whitened, replace them with new ones.
   - Make sure the connectors are plugged in properly.
   - When installing the console mounting bolts, first install the front bolts in the bottom of the center console trim.
   - After installing the front console covers, make sure the front pins of the covers are installed securely by moving the front edge of the panels to the outside.

HONDA

Center Console Armrest Removal/Installation

Special Tools Required
KTC trim tool set SOJATP2014 *
* Available through the Acura Tool and Equipment Program; 888-424-6857

NOTE:
- Take care not to scratch the console.
- Use the appropriate tool from the KTC trim tool set to avoid damage when removing components.

1. Remove the center console (see page 20-92).

2. Detach the clips, then remove the console trim (A). Disconnect the LF antenna connector (B) and the rear seat heater switch connectors (C) (if equipped).

Fastener Locations
▷ : Clip, 4

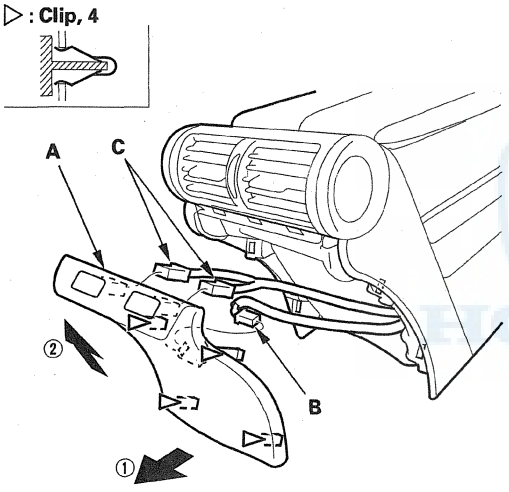

3. Remove the screws (A) and detach the clips (B) and hooks (C), then remove the left console side trim (D) and the right console side trim (E).

Fastener Locations
A ▶ : Screw, 4 B ▷ : Clip, 4

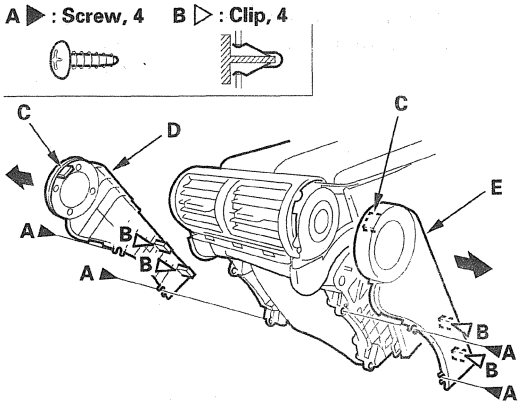

4. Remove the screws, and release the tabs (A), then remove the console outlet trim (B).

Fastener Locations
▶ : Screw, 2

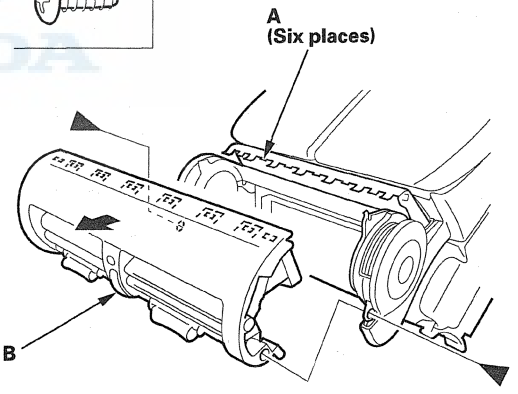

5. Remove the screws, hinge bushings (A), and the hinge stoppers (B) from both sides, then remove the console armrest (C).

Fastener Locations

▶ : Screw, 2

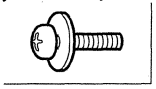

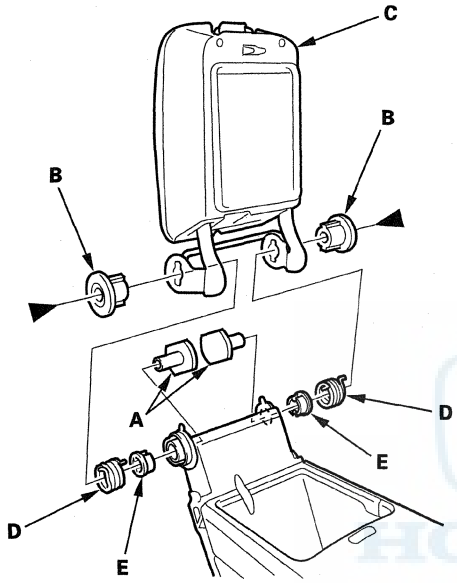

6. Remove the hinge springs (D) and the bushings (E) from both sides.

7. Install the armrest in the reverse order of removal, and note these items:

   - If the clips are damaged or stress-whitened, replace them with new ones.
   - Make sure the connector is plugged properly.
   - Push the clips into place securely.

Center Console Armrest Disassembly/Reassembly

NOTE: Take care not to scratch the armrest.

1. Remove the console armrest (see page 20-94).

2. Disassemble the console armrest.

   -1 Remove the armrest tray cover (A) by detaching the clips (B, C).
   -2 Remove the screws (D), then remove the armrest lids (E).
   -3 Remove the screws (F, G), then remove the armrest tray (H) from the armrest bracket (I).

Fastener Locations

B ▷ : Clip, 4 C ▷ : Clip, 2 D ▶ : Screw, 8

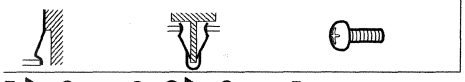

F ▶ : Screw, 2 G ▶ : Screw, 5

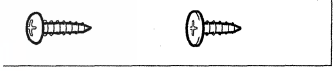

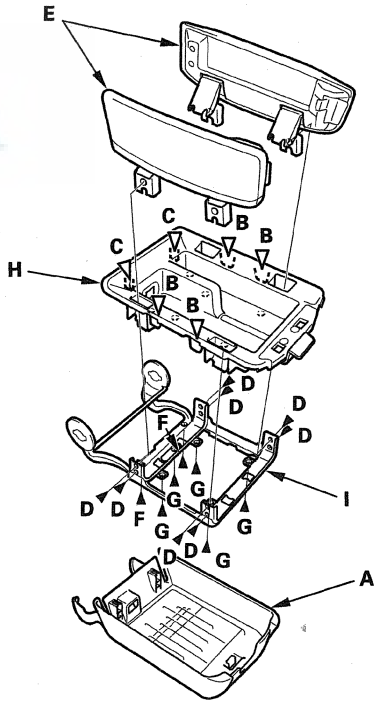

(cont'd)

Center Console Armrest Disassembly/Reassembly (cont'd)

3. Disassemble the armrest lid.

   -1 Pry out the lock cover (A).
   -2 Remove the screws (B), then remove the armrest lid lock (C).
   -3 Release the seals (D), and remove the screws (E), then remove the armrest lid cover (F).
   -4 Remove the screws (G), then remove the armrest hinges (H) and the armrest lid (I) from the armrest lid bracket (J).

Fastener Locations

B, G ▶ : Screw, 6 E ▶ : Screw, 3

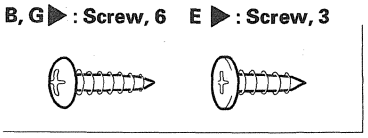

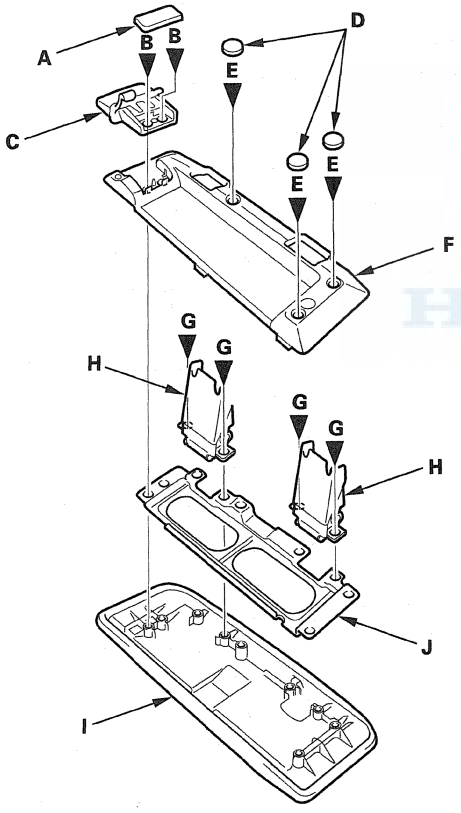

4. Reassemble the armrest in the reverse order of disassembly.

Center Trim Removal/Installation

Special Tools Required
KTC trim tool set SOJATP2014 *
* Available through the Acura Tool and Equipment Program; 888-424-6857

NOTE:
- Put on gloves to protect your hands.
- Use the appropriate tool from the KTC trim tool set to avoid damage when removing components.
- Take care not to scratch the trim and panels.

1. Remove these items:
   - Console panel (see step 1 on page 20-92)
   - Front console cover, both sides (see step 5 on page 20-93)
2. Remove the bolts securing the front of the center console (A), then pull out both sides as needed.

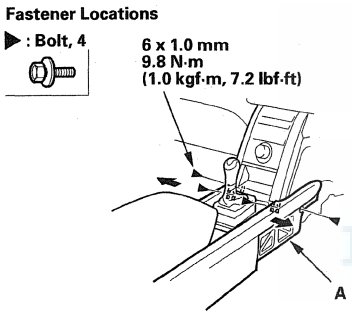

3. Gently pull out along the bottom to release the clips and the hooks (A), then remove the center trim (B).

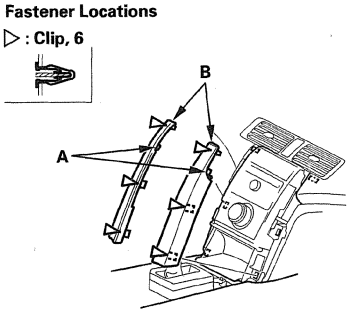

4. Install the trim in the reverse order of removal, and note these items:
   - If the clips are damaged or stress-whitened, replace them with new ones.
   - Push the clip portions into place securely.

Utility Pocket Removal/Installation

Special Tools Required
KTC trim tool set SOJATP2014 *
* Available through the Acura Tool and Equipment Program; 888-424-6857

NOTE:
- Put on gloves to protect your hands.
- Use the appropriate tool from the KTC trim tool set to avoid damage when removing components.
- Take care not to scratch the trim and the panels.

1. Remove the center console panel (see step 1 on page 20-92).
2. Remove the inner case (A), then remove the screws.

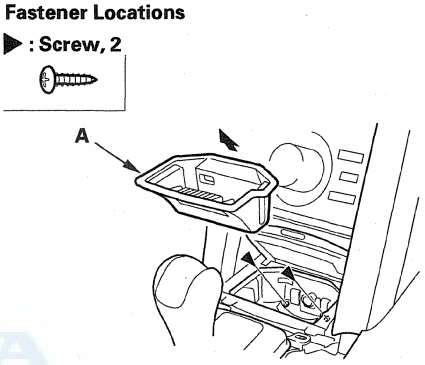

3. Pull out the utility pocket (A), disconnect the ambient light bulb socket (B), then remove the pocket.

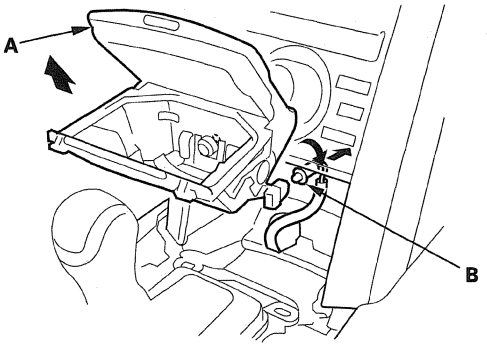

4. Install the pocket in the reverse order of removal, and note these items:
   - Make sure the bulb socket is connected securely.
   - Make sure the ambient light wire harness is not pinched.

Utility Pocket Housing Removal/Installation

Special Tools Required
KTC trim tool set SOJATP2014 *
* Available through the Acura Tool and Equipment Program; 888-424-6857

NOTE:
- Put on gloves to protect your hands.
- Use the appropriate tool from the KTC trim tool set to avoid damage when removing components.
- Take care not to scratch the trim and the panels.

1. Remove the center trim (see page 20-97).

2. Remove the screws.

Fastener Locations
▶ : Screw, 2

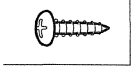

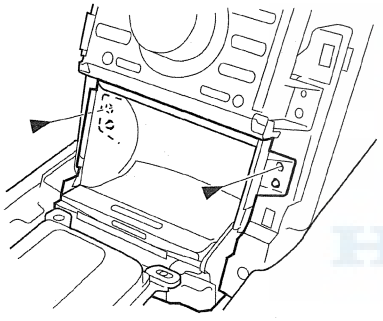

3. Gently pull out along the top of the utility pocket housing (A) to release the clips, then lower the front side down to release the pins (B) from the select lever bracket (C).

Fastener Locations
▷ : Clip, 2

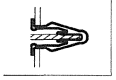

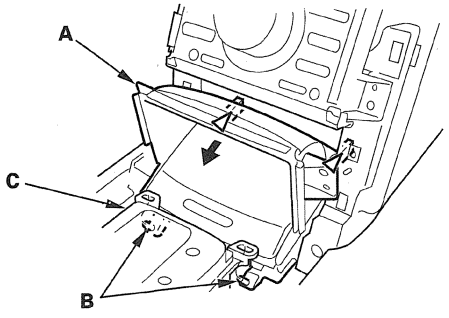

4. Gently pull out the ambient light bulb socket (A), then remove the utility pocket housing (B).

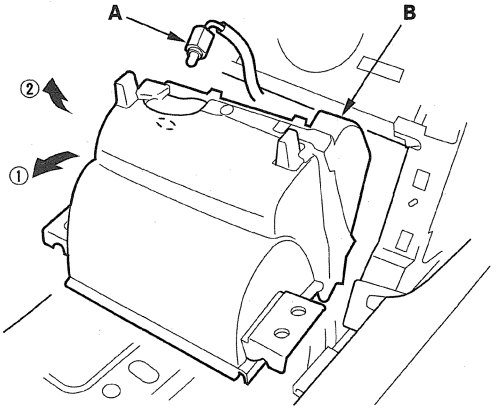

5. Install the pocket housing in the reverse order of removal, and note these items:

- If the clips are damaged or stress-whitened, replace them with new ones.
- Make sure the bulb socket is connected securely.
- Push the clips into place securely.

Driver's Switch Panel Removal/ Installation

Special Tools Required
KTC trim tool set SOJATP2014 *
* Available through the Acura Tool and Equipment Program; 888-424-6857

NOTE:
- Use the appropriate tool from the KTC trim tool set to avoid damage when removing components.
- Take care not to scratch the trim and the panels.

1. Gently pull out the driver's switch panel (A) to release the hooks (B) and detach the clips. Disconnect the power mirror switch connector (C), then remove the panel.

Fastener Locations
▷: **Clip, 2**

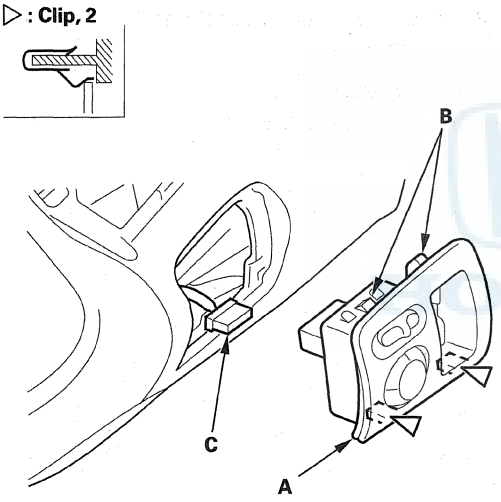

2. Install the panel in the reverse order of removal, and note these items:

   - If the clips are damaged or stress-whitened, replace them with new ones.
   - Make sure the connector is plugged in properly.
   - Push the clips and hooks into place securely.

Instrument Fascia Removal/ Installation

Special Tools Required
KTC trim tool set SOJATP2014 *
* Available through the Acura Tool and Equipment Program; 888-424-6857

NOTE:
- Use the appropriate tool from the KTC trim tool set to avoid damage when removing components.
- Take care not to scratch the dashboard and the panels.

1. Tilt the steering column down, and pull it out.

2. Remove the instrument fascia (A).

   1 Gently pull out the bottom to release the clips (B, C).
   2 Disconnect the illumination switch connector (D) and CMBS OFF/VSA OFF/AFS OFF switch connector (E).

Fastener Locations
B ▷: **Clip, 2** C ▷: **Clip, 2**

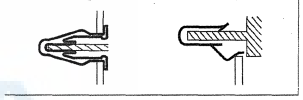

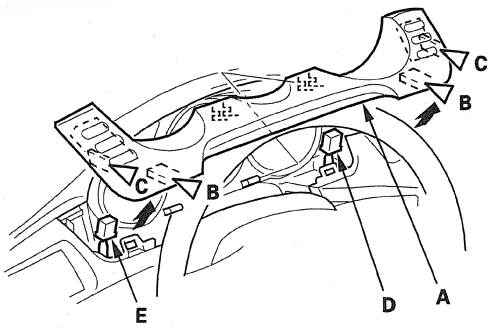

3. Install the instrument fascia in the reverse order of removal, and note these items:

   - If the clips are damaged or stress-whitened, replace them with new ones.
   - Make sure the connectors are plugged in properly.
   - Push the clips into place securely.

Driver's Dashboard Lower Cover Removal/Installation

Special Tools Required
KTC trim tool set SOJATP2014 *
* Available through the Acura Tool and Equipment Program; 888-424-6857

NOTE:
- Put on gloves to protect your hands.
- Use the appropriate tool from the KTC trim tool set to avoid damage when removing components.
- Take care not to scratch the trim and the panels.

1. Adjust the steering column upward.

2. Remove the driver's dashboard undercover (see page 20-100).

3. Release the clip (A), and pull out the driver's dashboard lower cover (B) to detach the clips (C) and hooks (D), then remove the cover.

Fastener Locations
A ▷ : Clip, 1 C ▷ : Clip, 3

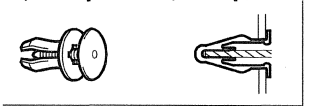

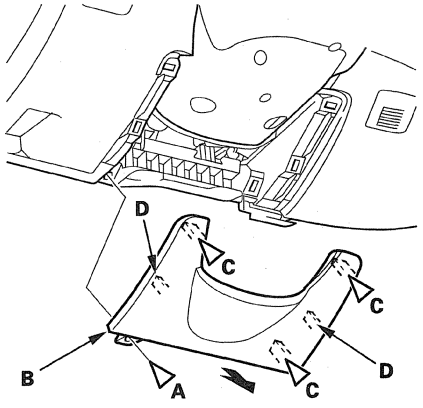

4. Install the cover in the reverse order of removal, and note these items:

   - If the clips are damaged or stress-whitened, replace them with new ones.
   - Push the clips into place securely.

Driver's Dashboard Undercover Removal/Installation

Special Tools Required
KTC trim tool set SOJATP2014 *
* Available through the Acura Tool and Equipment Program; 888-424-6857

NOTE:
- Use the appropriate tool from the KTC trim tool set to avoid damage when removing components.
- Take care not to scratch the dashboard and related parts.

1. Remove the driver's dashboard undercover (A).

   1 Gently pull down the front edge to detach the clips (B, C).
   2 Disconnect the ambient light connector (D).
   3 Pull the cover away to release the pin (E) from the holder (F).

Fastener Locations
B ▷ : Clip, 2 C ▷ : Clip, 1

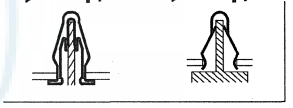

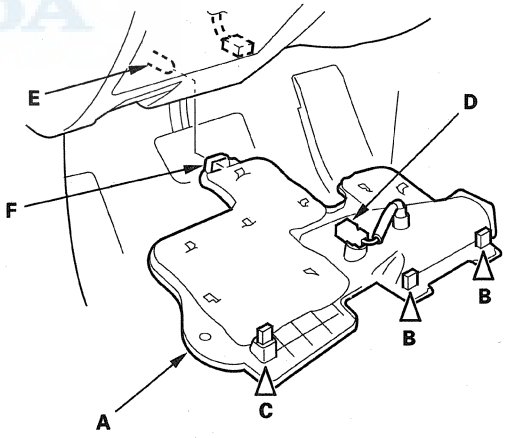

2. Install the cover in the reverse order of removal, and note these items:

   - If the clips are damaged or stress-whitened, replace them with new ones.
   - Push the clips into place securely.
   - Make sure the holder of the cover is installed securely to the pin.

Driver's Vent Panel Removal/ Installation

Special Tools Required
KTC trim tool set SOJATP2014 *
* Available through the Acura Tool and Equipment Program; 888-424-6857

NOTE:
- Use the appropriate tool from the KTC trim tool set to avoid damage when removing components.
- Take care not to scratch the dashboard and related parts.

1. Remove the instrument fascia (see page 20-99).

2. Gently pull out the driver's vent panel (A) to release the clips (B, C), then remove the panel.

Fastener Locations
B ▷: Clip, 2 C ▷: Clip, 1

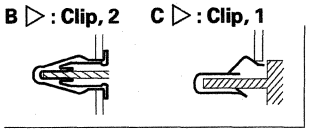

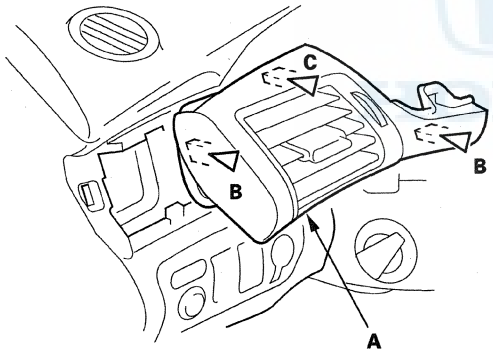

3. Install the panel in the reverse order of removal, and note these items:

- If the clips are damaged or stress-whitened, replace them with new ones.
- Push the clips into place securely.

Passenger's Vent Panel Removal/ Installation

Special Tools Required
KTC trim tool set SOJATP2014 *
* Available through the Acura Tool and Equipment Program; 888-424-6857

NOTE:
- Use the appropriate tool from the KTC trim tool set to avoid damage when removing components.
- Take care not to scratch the dashboard and related parts.

1. Remove these items.

   - Center trim, both sides (see page 20-97)
   - Utility pocket housing (see page 20-98)
   - Instrument fascia (see page 20-99)
   - Audio unit (see page 23-106)

2. Remove the passenger's vent panel (A).

   1 Open the glove box.
   2 Gently pull out the panel to release the clips (B, C).
   3 Disconnect the hazard warning switch/ passenger's airbag cutoff indicator connector (D).

Fastener Locations
B ▷: Clip, 13 C ▷: Clip, 1

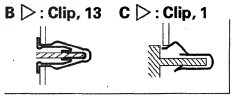

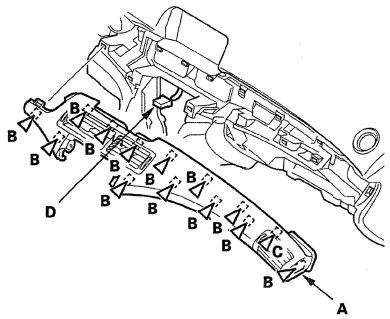

3. Install the panel in the reverse order of removal, and note these items:

- Replace any damaged clips.
- If the clips are damaged or stress-whitened, replace them with new ones.
- Make sure the connector is plugged in properly.

Document Tray Removal/ Installation

NOTE: Take care not to scratch the dashboard and related parts.

1. Open the glove box.
2. Remove the document tray (A).
   -1 Open the document tray.
   -2 Release the blind fastener (B).
   -3 Pull the document tray back to release the hooks (C).

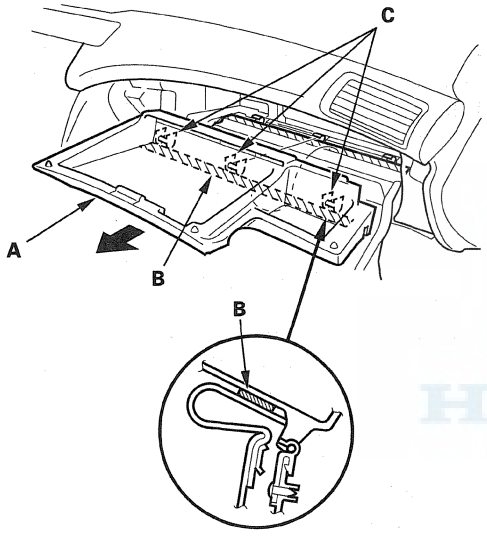

3. Install the tray in the reverse order of removal.

Passenger's Dashboard Undercover Removal/Installation

NOTE: Take care not to scratch the dashboard and related parts.

1. Remove the passenger's dashboard undercover (A).
   -1 Gently pull down the front edge to detach the clips.
   -2 Disconnect the ambient light connector (B).
   -3 Pull the cover away to release the pins (C) from the holders (D).

Fastener Locations

▷: Clip, 3

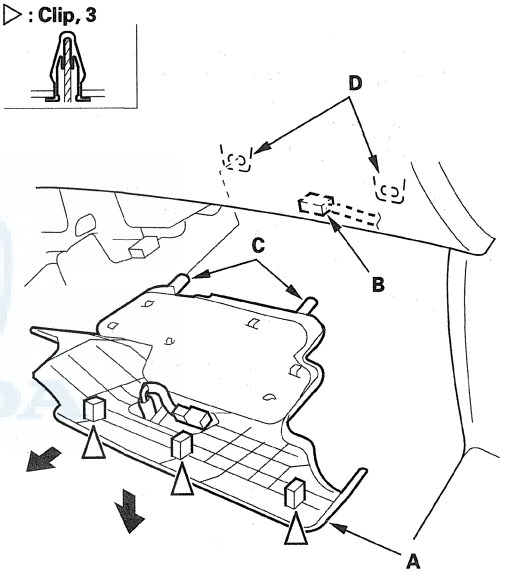

2. Install the cover in the reverse order of removal, and note these items:
   - If the clips are damaged or stress-whitened, replace them with new ones.
   - Push the clips into place securely.
   - Make sure the connector is plugged in properly.
   - Make sure the pins of the cover are installed securely to the holders.

Glove Box Removal/Installation

Special Tools Required
KTC trim tool set SOJATP2014 *
* Available through the Acura Tool and Equipment Program; 888-424-6857

SRS components are located in this area. Review the SRS component locations (see page 24-12) and the precautions and procedures (see page 24-14) before doing repairs or service.

NOTE:
- Use the appropriate tool from the KTC trim tool set to avoid damage when removing components.
- Take care not to scratch the dashboard and related parts.

1. Remove the passenger's dashboard undercover (see page 20-102).

2. Open the glove box (A) and the document tray (B). Remove the lid (C), then remove the screws (D) and bolt (E).

Fastener Locations
D ▶ : Screw, 4 E ▶ : Bolt, 1

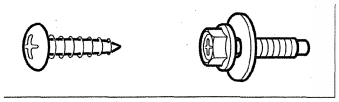

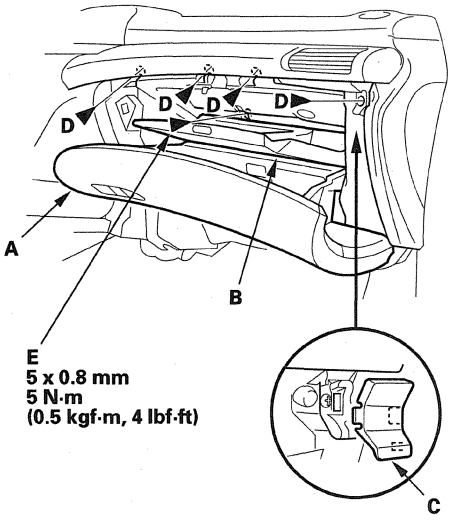

3. Close the glove box (A), then remove the bolts.

Fastener Locations
▶ : Bolt, 3

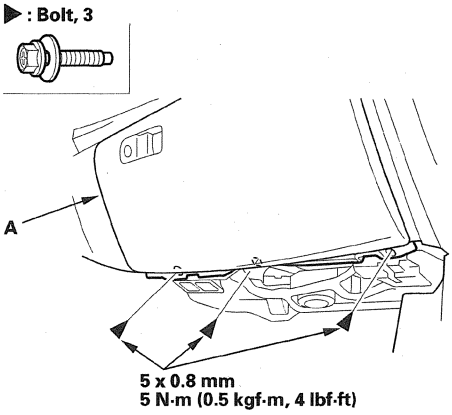

4. Remove the glove box (A).

1. Pull out the glove box, then remove the clips.
2. Remove the harness clip (B) and the ambient light bulb socket (C).
3. Disconnect the trunk lid opener main switch connector (D).

Fastener Locations
▷ : Clip, 2

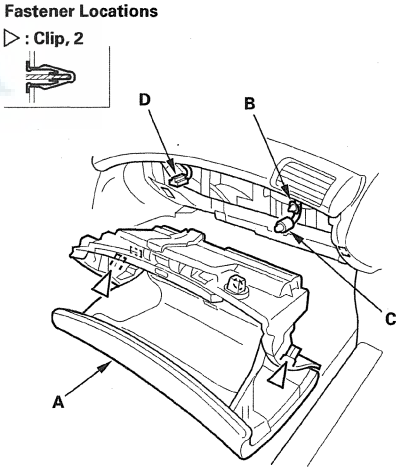

5. Install the box in the reverse order of removal, and note these items:

- If the clips are damaged or stress-whitened, replace them with new ones.
- Push the clips into place securely.
- Make sure the connector is plugged in properly, and the bulb socket is connected securely.
- Take care not to scratch the passenger's front console cover.

HONDA

Glove Box Damper Replacement

NOTE: Take care not to scratch the glove box.

1. Remove the glove box (see page 20-103).
2. Remove the screws (A, B), then remove the glove box damper (C), the stopper rubber (D), and the washer (E).

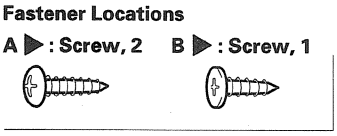

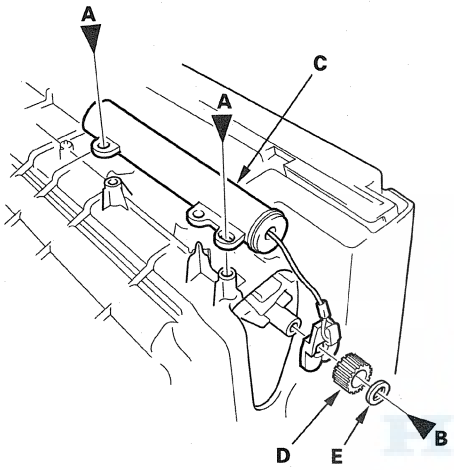

3. Install the damper in the reverse order of removal.

Glove Box Lock Cylinder Replacement

NOTE: Take care not to scratch the glove box.

1. Remove the glove box (see page 20-103).
2. Remove the document tray (see page 20-102).
3. Remove the screw securing the glove box damper wire to the glove box (see step 2 on page 20-104).
4. Remove the spring pins (A) from both sides, then remove the glove box lid (B) from the glove box housing (C).

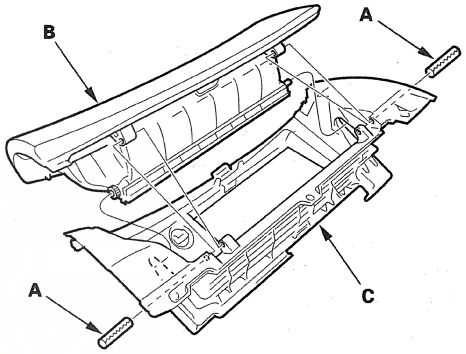

5. Remove the screws, and release the hooks (A) from both sides, then remove the glove box front trim (B) from the glove box (C).

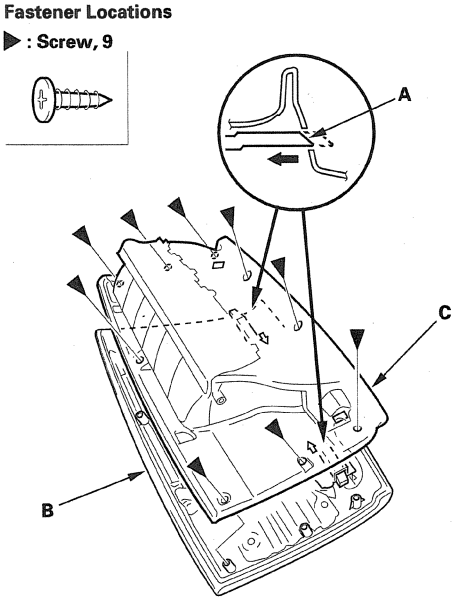

6. Remove the glove box lock lever body (A) by removing the screws. Disconnect the pin (B) from the link.

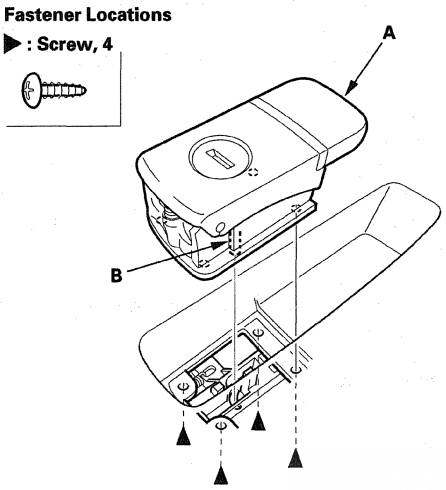

7. Using a flat-tip screwdriver, pry up the retainer (A), then remove the glove box lock cylinder (B).

   NOTE: Wear eye protection when doing this step.

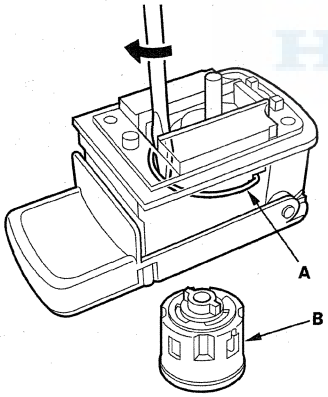

8. Set the retainer into the lock body, then push the lock cylinder into the lock cylinder body until it snaps into the retainer.

9. Install the lock lever body in the reverse order of removal, and note these items:

   - Before installing the lock lever body to the glove box, make sure the lock cylinder operates properly.
   - Replace the spring pins with new ones.
   - Before installing the spring pins, apply grease to them.

Side Defogger Vent Trim Removal/ Installation

NOTE:
- Take care not to scratch the dashboard and related parts.
- Put on gloves to protect your hands.
- The driver's side is shown; the passenger's side is similar.

1. Remove these items:

   - Driver's: Driver's vent panel (see page 20-101)
   - Passenger's: Passenger's vent panel (see page 20-101)

2. Push on the lower hook (A) by hand to release it. Then gently press up on the side defogger trim (B) to remove it.

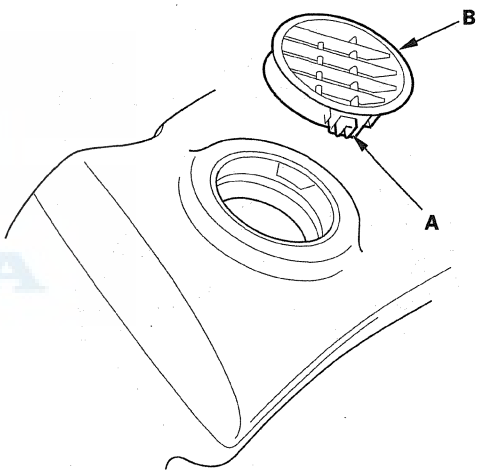

3. Install the side defogger vent trim by pushing it into place securely.

Dashboard Center Vent Removal/ Installation

NOTE: Take care not to scratch the vent panel and related parts.

1. Remove the passenger's vent panel (see page 20-101).
2. Remove the screws, then remove the center vent (A) from the vent panel (B).

Fastener Locations

▶ : Screw, 6

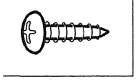

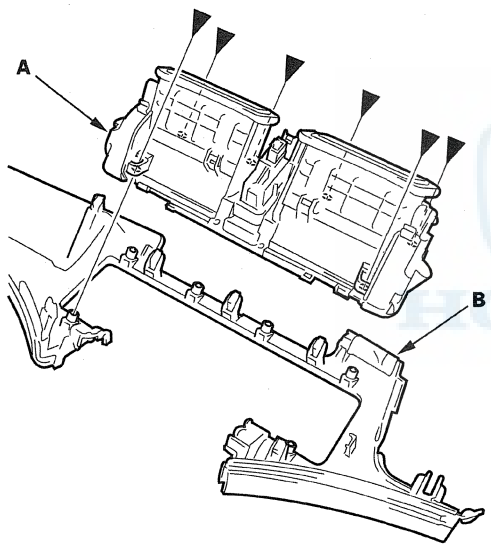

3. Install the center vent in the reverse order of removal.

Dashboard Side Vent Removal/ Installation

NOTE:
- Take care not to scratch the vent panel and related parts.
- The driver's side is shown; the passenger's side is similar.

1. Remove these items:
   - Driver's: Driver's vent panel (see page 20-101)
   - Passenger's: Passenger's vent panel (see page 20-101)
2. Remove the screws, then remove the side vent (A) from the vent panel (B).

Fastener Locations

▶ : Screw, 4

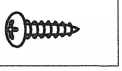

3. Install the side vent in the reverse order of removal.

Dashboard Replacement

Special Tools Required
KTC trim tool set SOJATP2014 *
* Available through the Acura Tool and Equipment Program; 888-424-6857

SRS components are located in this area. Review the SRS component locations (see page 24-12) and the precautions and procedures (see page 24-14) before doing repairs or service.

NOTE:
- Use the appropriate tool from the KTC trim tool set to avoid damage when removing components.
- Have an assistant help you when removing and installing the dashboard.
- Take care not to scratch the dashboard, body and other related parts.
- Put on gloves to protect your hands.

1. Do the battery terminal disconnection procedure (see page 22-91), then wait at least 3 minutes before beginning work.

2. Remove these items:

   - Driver's switch panel (see page 20-99)
   - Instrument fascia (see page 20-99)
   - Driver's vent panel (see page 20-101)
   - Passenger's vent panel (see page 20-101)
   - Center console (see page 20-92)
   - Driver's dashboard lower cover (see page 20-100)
   - Glove box (see page 20-103)
   - Center trim, both sides (see page 20-97)
   - Utility pocket assembly (see page 20-98)
   - Gauge control module (see page 22-419)
   - Audio unit (see page 23-106)
   - Audio-HVAC subdisplay (see page 23-107)
   - Sunlight sensor (see page 21-75)
   - In-car temperature sensor (see page 21-71)
   - A-pillar trim, both sides (see page 20-69)
   - Steering column (see page 17-25)
   - Shift lever bracket (see page 14-230)

Passenger's side

3. Remove the screw, then remove the passenger's joint duct (A).

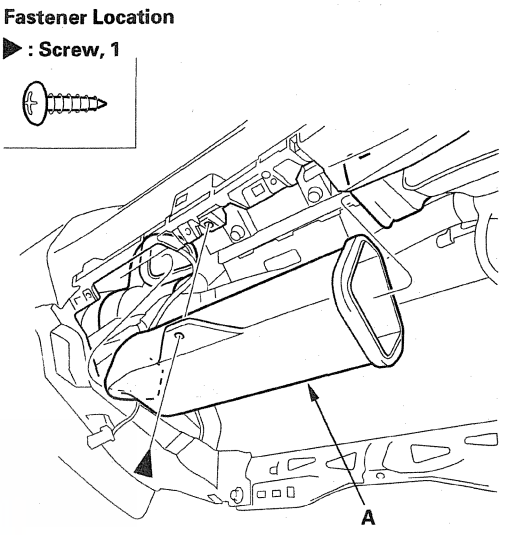

4. Disconnect and detach the passenger's airbag connector (A), from the steering hanger beam, and detach the steering hanger beam wire harness clip (B). Remove the passenger's airbag mounting nuts.

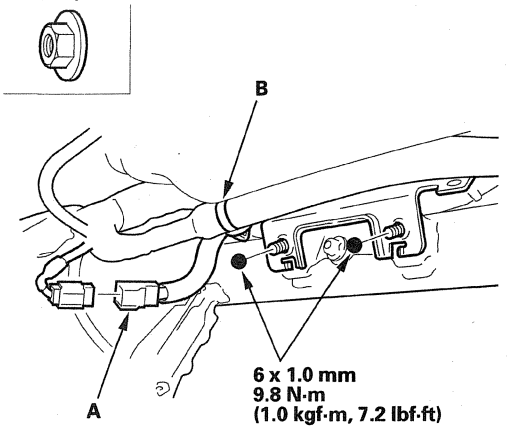

(cont'd)

Dashboard Replacement (cont'd)

Center

5. Disconnect the RF unit connector (A) and detach the harness clip (B) from the unit bracket (C). Tie a string to the sunlight sensor harness connector (D), then pull the connector out through the hole (E) in the dashboard. Remove the bolts, then remove the RF unit (F).

Fastener Locations
▶ : Bolt, 2

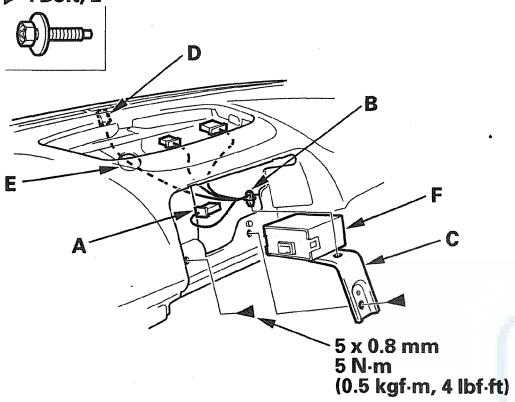

6. From the front of the dashboard, remove the screws (A) and the bolts (B, C) securing the dashboard/steering hanger beam (D).

Fastener Locations
A ▶ :Screw , 6 B ▶ : Bolt, 5 C ▶ : Bolt, 1

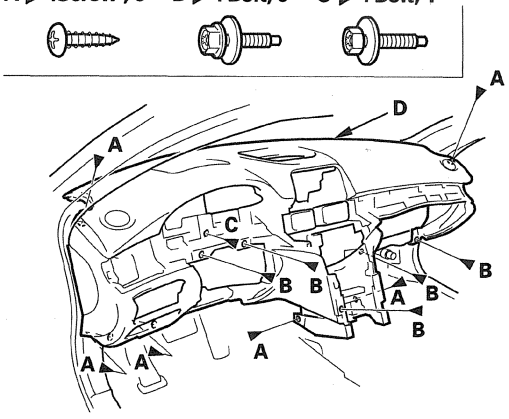

7. Lift up on the dashboard (A) to release it from the guide pins (B), then carefully remove the dashboard through the front door opening.

NOTE: Lay the dashboard on its front or back. Do not rest it on the lower console opening or you may damage it.

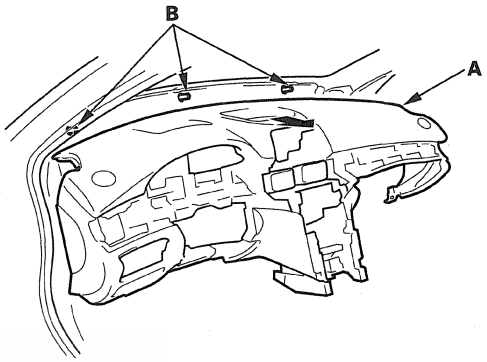

8. Install the dashboard in the reverse order of removal, and note these items:

- Make sure the dashboard fits onto the guide pins correctly.
- Make sure the wire harnesses are not pinched before tightening the bolts.
- Make sure the connectors are plugged in properly.
- Do the battery terminal reconnection procedure (see page 22-91).
- If necessary, adjust the shift cable (see page 14-238).
- Check for any DTCs that may have been set during repairs, and clear them.

Dashboard/Steering Hanger Beam Removal/Installation

Special Tools Required
KTC trim tool set SOJATP2014 *
* Available through the Acura Tool and Equipment Program; 888-424-6857

SRS components are located in this area. Review the SRS component locations (see page 24-12) and the precautions and procedures (see page 24-14) before doing repairs or service.

NOTE:
- Use the appropriate tool from the KTC trim tool set to avoid damage when removing components.
- Have an assistant help you when removing and installing the dashboard.
- Take care not to scratch the dashboard/steering hanger beam, body and other related parts.
- Put on gloves to protect your hands.

1. Do the battery terminal disconnection procedure (see page 22-91), then wait at least 3 minutes before beginning work.

2. Remove these items:
   - Driver's dashboard undercover (see page 20-100)
   - Passenger's dashboard undercover (see page 20-102)
   - Center console (see page 20-92)
   - Utility pocket housing (see page 20-98)
   - Instrument fascia (see page 20-99)
   - Driver's dashboard lower cover (see page 20-100)
   - Glove box (see page 20-103)
   - Kick panels, both sides (see page 20-67)
   - A-pillar trim, both sides (see page 20-69)
   - Steering column (see page 17-25)

3. Disconnect the hood opener cable (see page 20-183).

Driver's side

4. From under the dash, disconnect the keyless access control unit connectors (A), the brake switch connector (B), the left side wire harness connectors (C), the engine compartment wire harness connectors (D), and disconnect the dashboard wire harness connectors (E) and the combination subwire harness connector (F) from the driver's under-dash fuse/relay box (G), then release the wire harness clips.

   NOTE: Lift the white wire harness connector locks (H) before trying to remove the connectors from the fuse box.

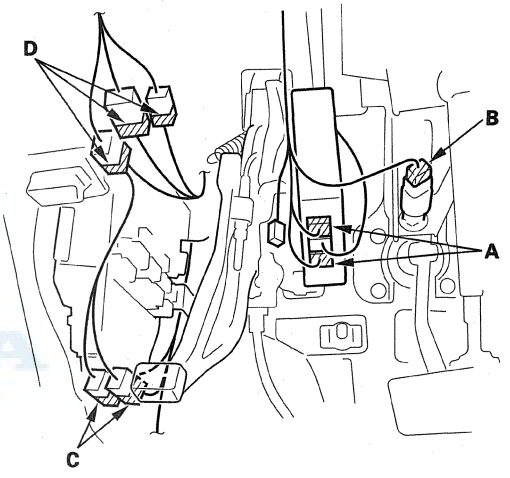

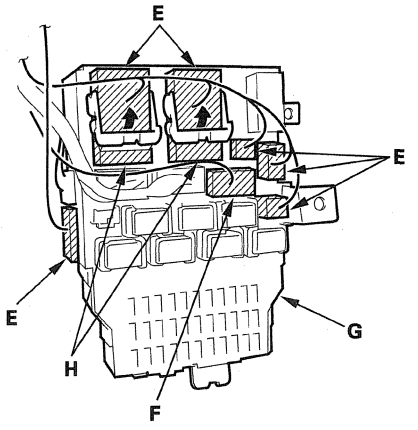

(cont'd)

Dashboard/Steering Hanger Beam Removal/Installation (cont'd)

Middle portion (shift lever portion)

5. Disconnect and detach the left side wire harness connectors (A, B), and release the wire harness clips (C), then remove the rear vent duct A (D). Disconnect the left side wire harness connectors (E), the dashboard wire harness connector (F) from the SRS unit, and the yaw rate-lateral acceleration sensor connector (G). Using a TORX T30 bit, remove the ground bolt (H).

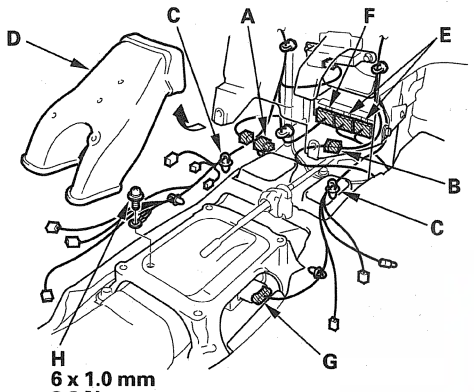

Center (passenger's side)

6. From under the dash, release the clip, and pull the carpet (A) back. Disconnect and detach PCM connectors (B), and the engine wire harness connector (C).

Fastener Location

▷: Clip, 1

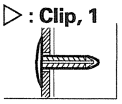

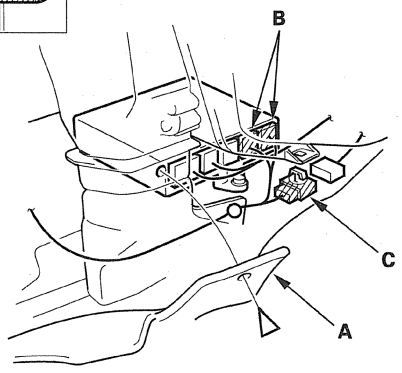

Passenger's side

7. From under the dash, disconnect the front passenger's door subharness connector (A), A/C wire harness connectors (B), the right side wire harness connectors (C), the engine compartment wire harness connector (D), and disconnect the dashboard wire harness connectors (E) from the passenger's under-dash fuse/relay box (F).

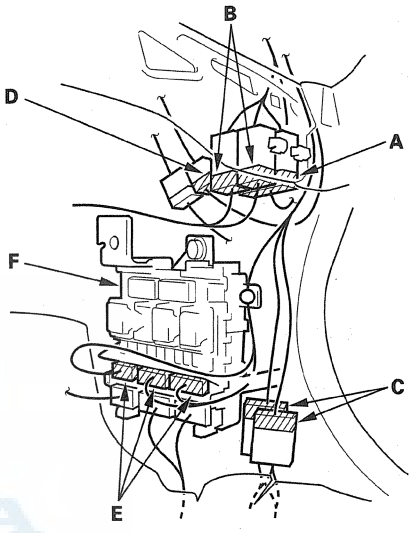

8. Detach all of the harness and connector clips.

9. Open the passenger's door, and gently pull out along the rear edge to release the hooks (A), then remove the passenger's dashboard side lid (B).

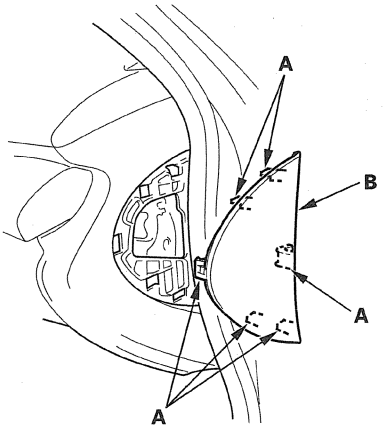

10. Open the driver's door, and remove the caps (A), then remove the bolts (B, C), loosen the two bolts (D), and lift up on the dashboard (E) to release it from the guide pins (F, G).

    NOTE: Before removing the dashboard/steering hanger beam, make sure all the harnesses have been disconnected.

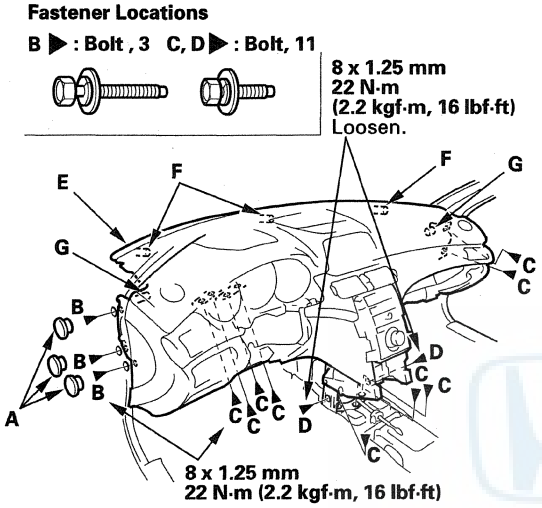

11. Carefully remove the dashboard/steering hanger beam through the front door opening.

    NOTE: Lay the dashboard on its front or back. Do not rest it on the lower console opening or you may damage it.

12. Remove the bolts, then remove the center bracket (A).

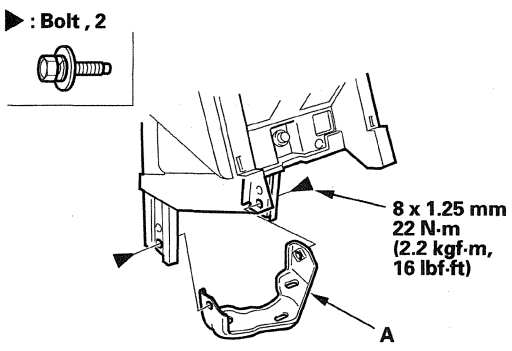

13. Install the dashboard/steering hanger beam in the reverse order of removal, and note these items:

    - Reinstall the center bracket on the center frame, and slightly tighten the mounting bolts. Reinstall the dashboard on the body. After tightening the dashboard mounting bolts and nut, tighten the center bracket mounting bolts and center frame mounting bolts.
    - Make sure the dashboard/steering hanger beam fits onto the guide pins correctly.
    - Apply liquid thread lock to the bolts securing the center bracket and the dashboard before reinstallation.
    - Before tightening the bolts, make sure the wire harnesses are not pinched.
    - Make sure the connectors are plugged in properly.
    - Do the battery terminal reconnection procedure (see page 22-91).
    - If necessary, adjust the shift cable (see page 14-238).
    - Check for any DTCs that may have been set during repairs, and clear them.
    - Reset the power window control unit (see page 22-331).

Component Location Index

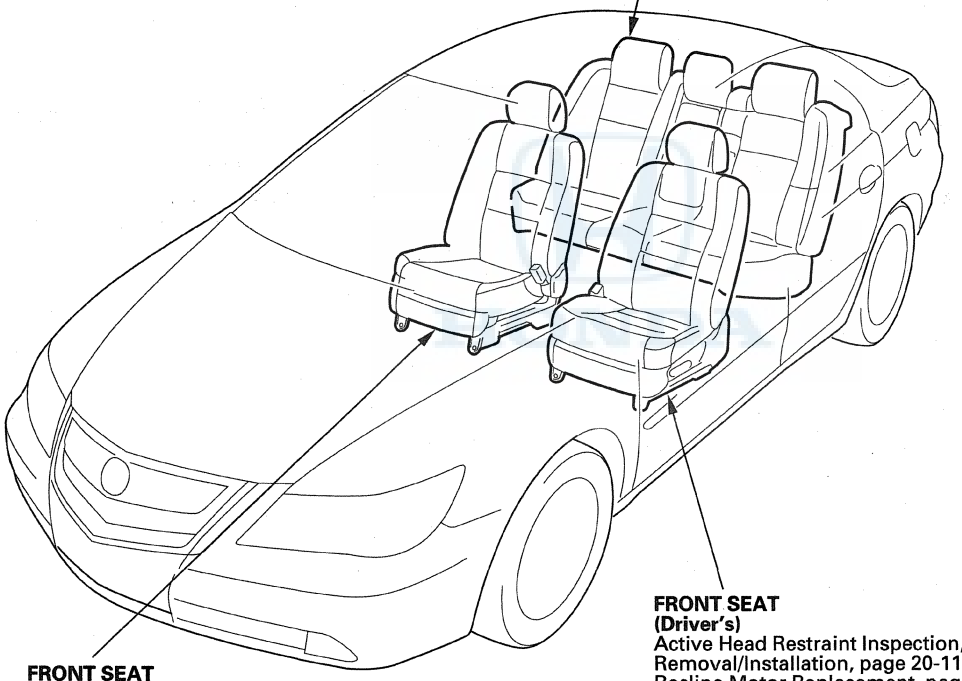

REAR SEAT
Removal/Installation, page 20-140
Armrest Beverage Holder Replacement, page 20-141
Armrest Replacement, page 20-142
Trunk Pass-through Cover Key Cylinder Replacement, page 20-143
Head Restraint Replacement, page 20-144
Head Restraint Actuator/Wire Harness Replacement, page 20-144
Seat-back Upper Flap Replacement, page 20-145
Seat-back Cover Replacement, page 20-146
Seat Cushion Cover Replacement, page 20-147
Head Restraint Cover/Pad Replacement, page 20-148

FRONT SEAT
(Passenger's)
Active Head Restraint Inspection, page 20-113
Removal/Installation, page 20-114
Recline Motor Replacement, page 20-117
Lumbar Support Replacement, page 20-118
Slide Motor Replacement, page 20-120
Up-down Motor Replacement, page 20-122
Seat Frame Removal/Installation, page 20-126
Seat-back Cover Replacement, page 20-128
Seat Cushion Cover Replacement, page 20-133
Ventilation Blower Motor/Duct Replacement, page 20-137

FRONT SEAT
(Driver's)
Active Head Restraint Inspection, page 20-113
Removal/Installation, page 20-114
Recline Motor Replacement, page 20-117
Lumbar Support Replacement, page 20-118
Slide Motor Replacement, page 20-120
Up-down Motor Replacement, page 20-122
Seat Frame Removal/Installation, page 20-126
Seat-back Cover Replacement, page 20-128
Seat Cushion Cover Replacement, page 20-133
Ventilation Blower Motor/Duct Replacement, page 20-137

Front Seat Active Head Restraint Inspection

NOTE: If the vehicle has been in a collision, always inspect the active head restraint, even if they appear reusable, by doing the following procedure.

1. With the recline switch, move the seat-back to the fully upright position.

2. Apply masking tape on the top of the head restraint.

3. Make marks (A) on both sides at 255 mm (10.0 in) upward from the roots of the head restraint frame (B) along the back of the head restraint (C) surface. Use the center point (D) between the two marks for the measurements.

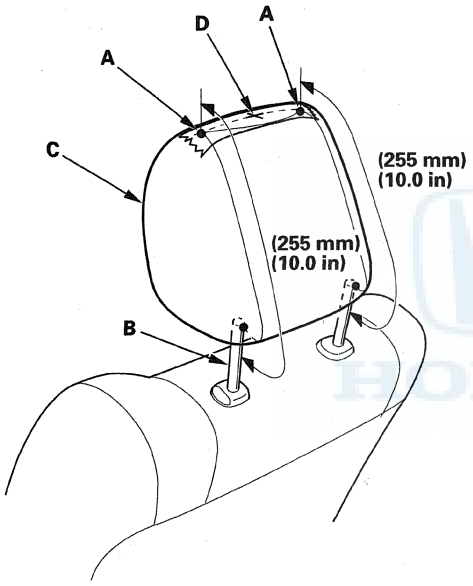

4. Push the head restraint (A) forward, and using a scale, measure the horizontal head restraint movement. The head restraint should move more than 50 mm (2.0 in) without resistance. If it is less than 50 mm (2.0 in), or the head restraint does not move smoothly, replace the seat frame (see page 20-126).

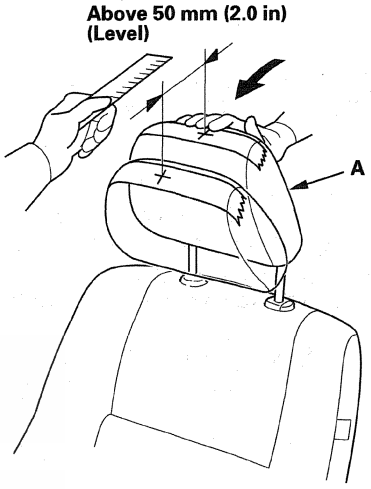

Front Seat Removal/Installation

Special Tools Required
KTC trim tool set SOJATP2014 *
* Available through the Acura Tool and Equipment Program; 888-424-6857

SRS components are located in this area. Review the SRS component locations (see page 24-12) and the precautions and procedures (see page 24-14) before doing repairs or service.

Do the ODS unit initialization (see page 24-26) after front passenger's seat replacement.

NOTE:
- Put on gloves to protect your hands.
- Take care not to tear or damage the seat covers.
- When prying with a flat-tip screwdriver, wrap it with protective to prevent damage.
- Take care not to scratch the body or tear the seat covers.
- Use the appropriate tool from KTC trim tool set to avoid damage when removing components.

1. Tilt the steering wheel all the way up, and move it all the way in.
2. Slide the front seat all the way forward. Carefully pry up on the bottom of the anchor cover (A) to release the hooks (B) and the tab (C), then remove the cover by pulling it upward.

Driver's seat

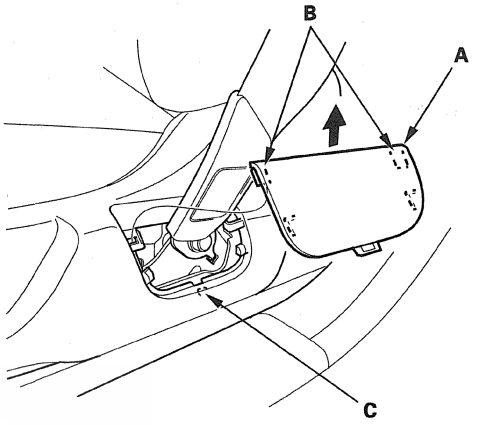

Passenger's seat

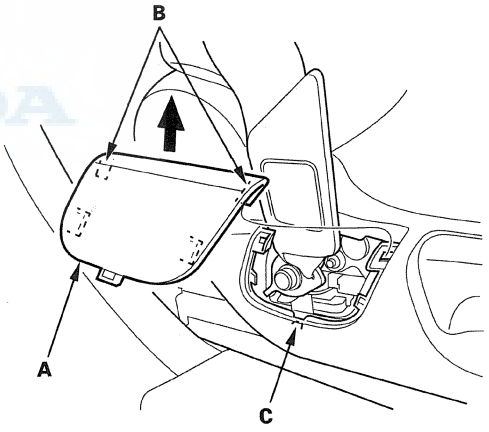

3. Remove the lower anchor bolt (A).

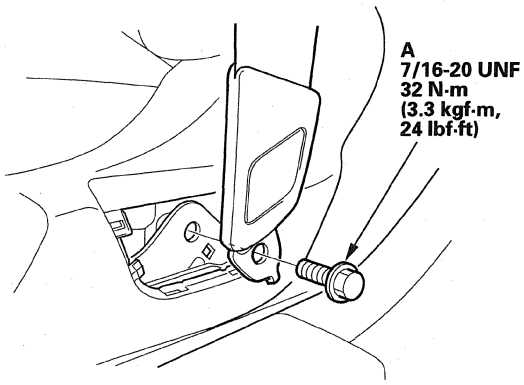

4. Slide the front seat all the way forward, remove the seat track outer end covers (A) and the seat track inner end covers (B) from the back of both seat tracks.

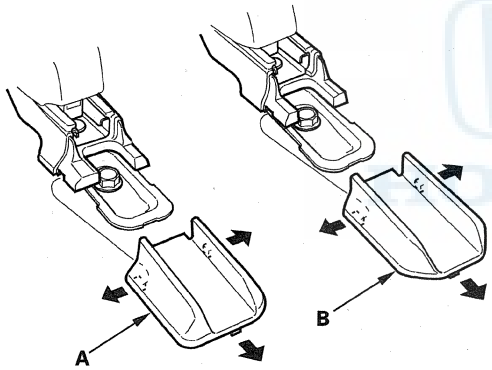

5. Remove the rear bolts.

Fastener Locations
▶: Bolt, 2

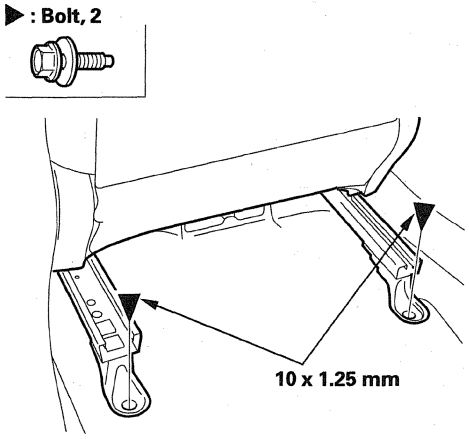

6. Slide the front seat all the way back, and remove the front bolts.

Fastener Locations
▶: Bolt, 2

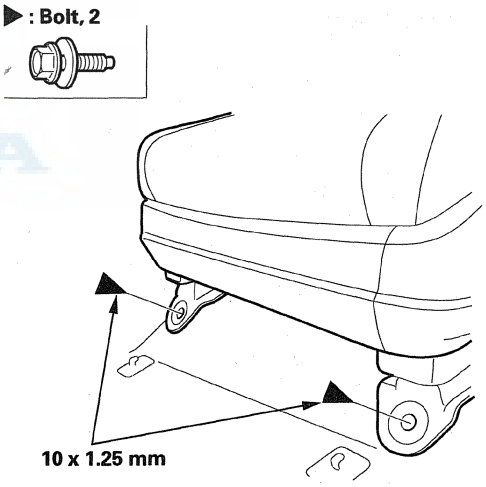

7. Do the battery terminal disconnection procedure (see page 22-91), then wait at least 3 minutes before removing the seat.

(cont'd)

Front Seat Removal/Installation (cont'd)

8. Lift up the front seat, then detach the harness clips (A), and disconnect the seat wire harness connector (B), the side airbag connector (C), the seat position sensor connector (D), and disconnect the ODS unit connector (E) on the passenger's seat.

Driver's seat

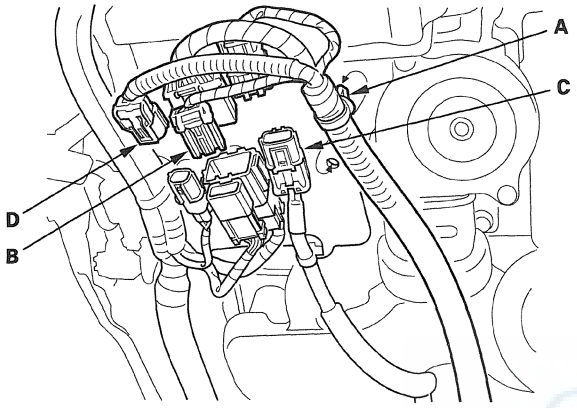

Passenger's seat

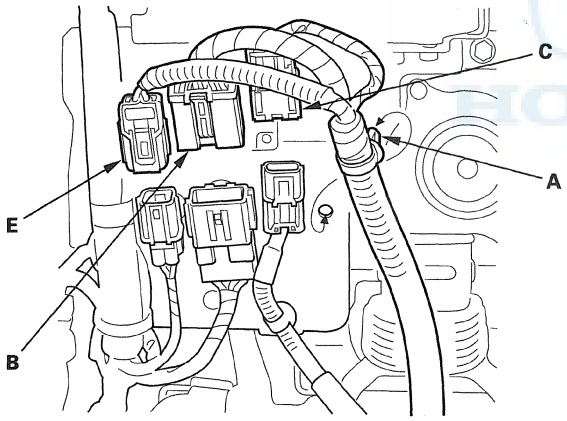

9. Install the seat in the reverse order of removal, and note these items:

- Make sure the seat harness are routed correctly.
- Apply medium strength liquid thread lock to the seat mounting bolts before reinstallation.
- Tighten the seat mounting bolts to the specified torque in the sequence shown. Slide the seat all the way back and tighten ① and ②, then slide it forward and tighten ③ and ④. The driver's seat is shown; the passenger's seat is symmetrical.
- Make sure each connectors are plugged in properly.
- Tighten the bolts by hand first, then tighten them to specification with a torque wrench.
- Do the battery terminal reconnection procedure (see page 22-91).
- Check for any DTCs that may have been set during repairs, and clear them.

Seat mounting bolts tightening sequence

Fastener Locations

▶ : Bolt, 4

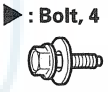



Front Seat Recline Motor Replacement

SRS components are located in this area. Review the SRS component locations (see page 24-12) and the precautions and procedures (see page 24-14) before doing repairs or service.

NOTE: Put on gloves to protect your hands.

1. Remove the front seat (see page 20-114).
2. Remove the seat-back cover and pad (see page 20-128).
3. Disconnect and detach the recline motor connector (A), and detach the harness clip (B).

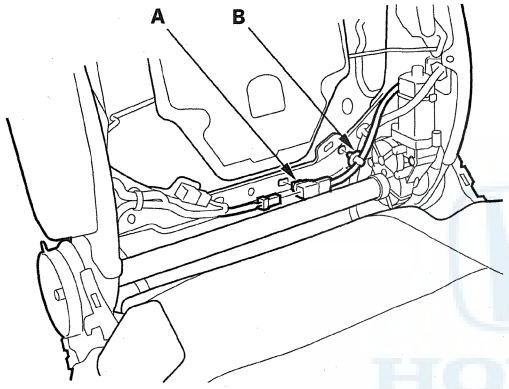

4. Release the push nut (A) from the motor side end of the connecting rod (B), then gently tap on the motor side of the connecting rod to remove it from the recline motor (C) and both recline adjusters (D). The driver's seat is shown; the passenger's seat is similar.

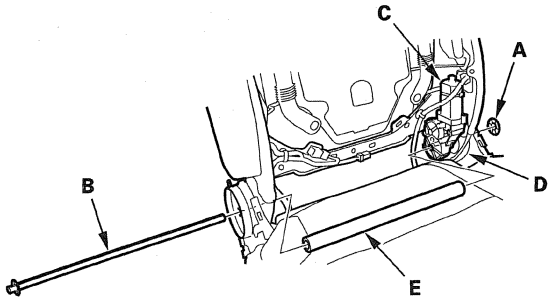

5. Remove the rod cover (E).
6. Remove the bolt, then remove the recline motor (A). The driver's seat is shown; the passenger's seat is similar.

Fastener Location

▶ : Bolt, 1

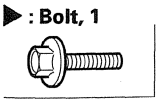

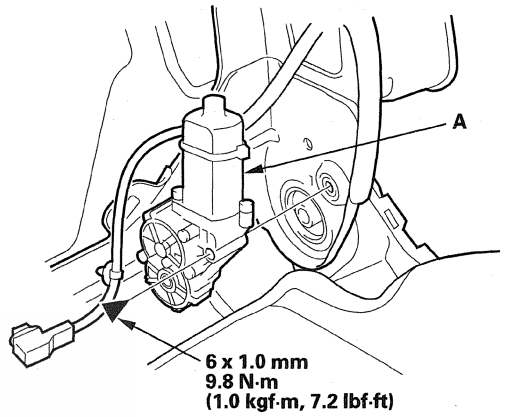

7. Install the motor in the reverse order of removal, and note these items:

- Replace the push nut with a new one. Make sure the push nut is installed correctly.
- Make sure the lumbar support motor connector is plugged in properly, and push the harness clip into place securely.
- Apply medium strength liquid thread lock to the mounting bolt before reinstallation.

Front Seat Lumbar Support Replacement

SRS components are located in this area. Review the SRS component locations (see page 24-12) and the precautions and procedures (see page 24-14) before doing repairs or service.

NOTE:
- Put on gloves to protect your hands.
- Take care not to tear or damage the seat covers.
- Take care not to kink the cable.

1. Remove the front seat (see page 20-114).
2. Remove the seat-back cover/pad (see page 20-128).
3. Release the hook strip as needed, then turn over the seat-back cover (see step 4 on page 20-129).
4. Release the upper wire (A) from both seat-back side frames (B) of inside the seat-back.

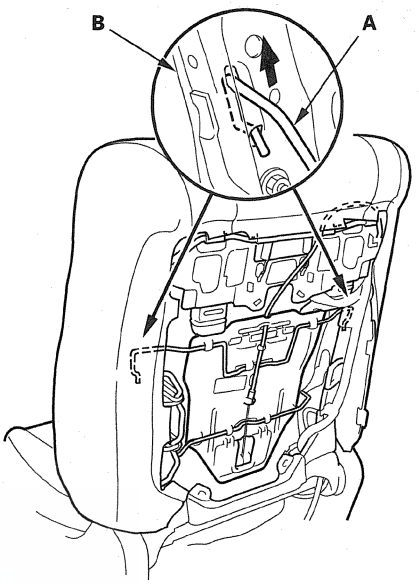

5. Release the lower wire (A) from both active head restraint links (B) of inside the seat-back.

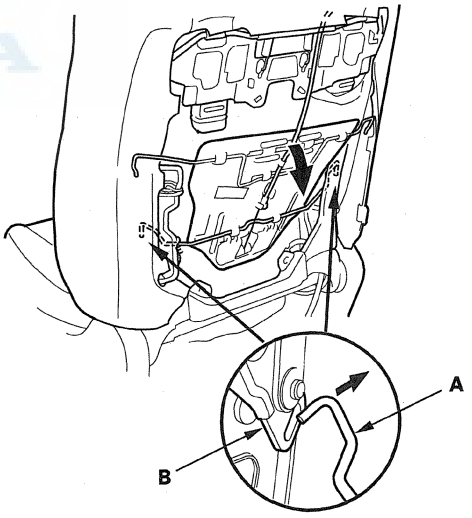

6. Remove the lumbar support motor cover (A).

-1 Release the cover from the lower hooks (B).
-2 Pull the cover upward to release it from the upper hooks (C).

Driver's seat

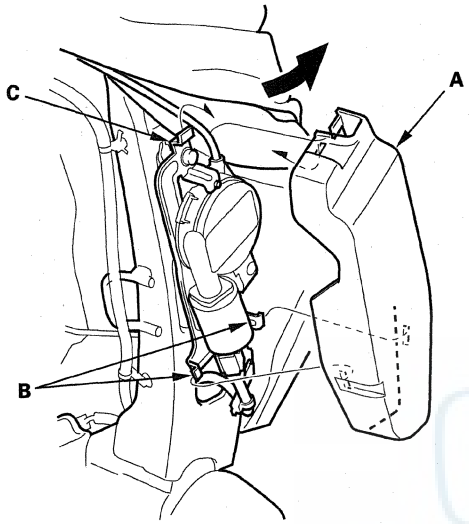

Passenger's seat

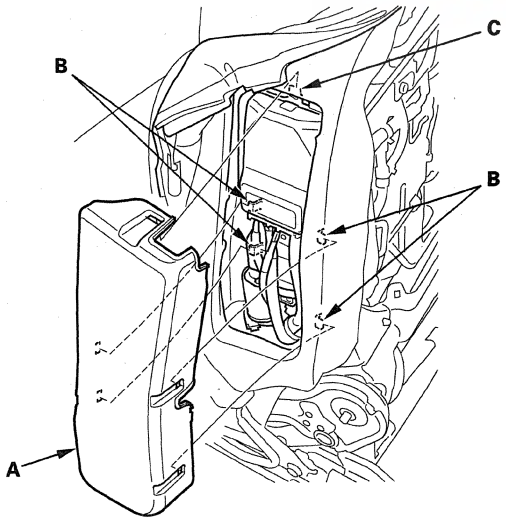

7. Disconnect the lumbar support motor connector (A), and detach the harness clip (B). Remove the bolts (C), nuts (D, E) and disconnect the ODS unit connector (F) (on passenger's seat), then remove the lumbar support motor (G).

Driver's seat

Fastener Locations

C ▶ : Bolt, 2



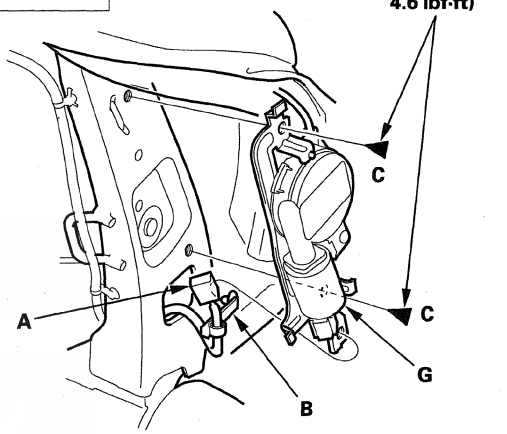

Passenger's seat

Fastener Locations

C ▶ : Bolt, 1 D ● : Nut, 2 E ● : Nut, 1



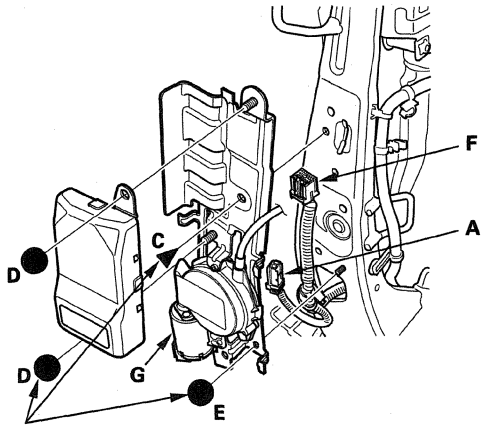

6 x 1.0 mm
6.3 N·m (0.64 kgf·m, 4.6 lbf·ft)

(cont'd)

Front Seat Lumbar Support Replacement (cont'd)

8. Install the lumbar support in the reverse order of removal, and note these items:

   - Make sure the connector is plugged in properly.
   - To prevent wrinkles when installing a seat-back cover, make sure the material is stretched evenly over the pad before securing the hook strips.
   - If the clips are damaged or stress-whitened, replace them with new ones.

Front Seat Slide Motor Replacement

SRS components are located in this area. Review the SRS component locations (see page 24-12) and the precautions and procedures (see page 24-14) before doing repairs or service.

NOTE:
- Put on gloves to protect your hands.
- Take care not to tear or damage the seat covers.

1. Remove the front seat (see page 20-114).

2. Remove the flex cable (A) and the cable housing (B).

   -1 Release the housing from the hooks (C).
   -2 Disconnect the cable from the worm gear (D) in the inner seat track by pulling out the housing.
   -3 Disconnect the cable from the slide motor (E).

   NOTE: Take care not to kink the cable.

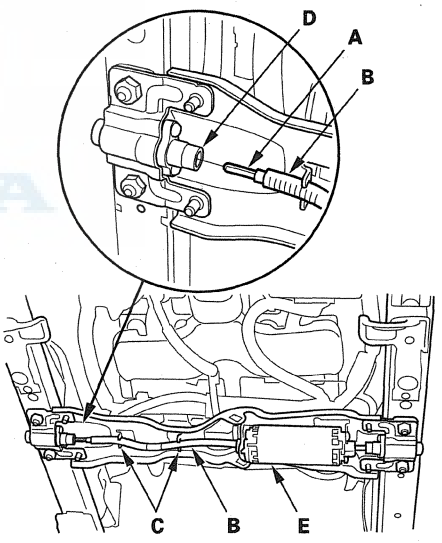

3. Disconnect the slide motor connector (A), and remove the screws, then remove the slide motor (B) from the slide motor bracket (C) while disconnecting the motor from the short flex cable (D).

Fastener Locations

▶ : Screw, 2

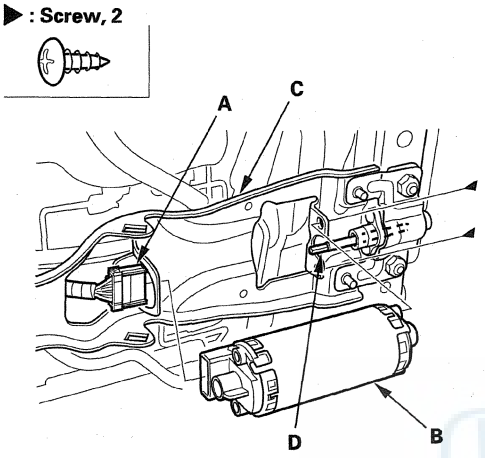

4. Pull out the short flex cable (A) from the worm gear (B) in the outer seat track.

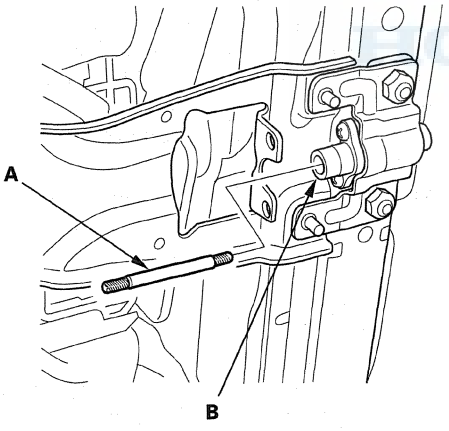

5. Install the motor in the reverse order of removal, and note these items:

- Apply multipurpose grease to the worm gear portions in both seat tracks.
- Before installing the slide motor to the slide motor bracket, install the short flex cable to the slide motor.
- Before installing the slide motor bracket to the seat tracks, make sure both seat tracks are located forward fully.
- Make sure the short flex cable and the flex cable are connected properly.

Front Seat Up-down Motor Replacement

Front Up-down Motor - 8-Way Power Seat

SRS components are located in this area. Review the SRS component locations (see page 24-12) and the precautions and procedures (see page 24-14) before doing repairs or service.

NOTE:
- Put on gloves to protect your hands.
- Take care not to tear or damage the seat covers.

1. Remove the front seat (see page 20-114).

2. Remove the seat cushion cover/pad (see page 20-133).

3. Remove the front up-down motor (A) and the front up-down motor bracket (B) as an assembly:

   1 Disconnect the motor connector (C).
   2 Using a TORX T30 bit, remove the motor bracket mounting bolts (D).
   3 Using a TORX T40 bit, remove the motor bracket mounting bolt (E).

Fastener Locations

D ▶ : TORX Bolt, 3 E ▶ : TORX Bolt, 1

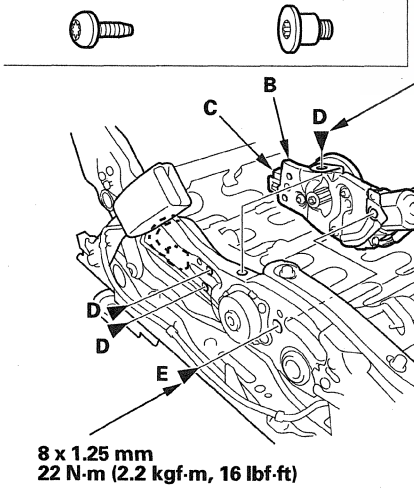

4. Detach the motor connector (A). Using a TORX T30 bit, remove the bolts, then remove the front up-down motor (B) from the front up-down motor bracket (C).

Fastener Locations

▶ : TORX Bolt, 3

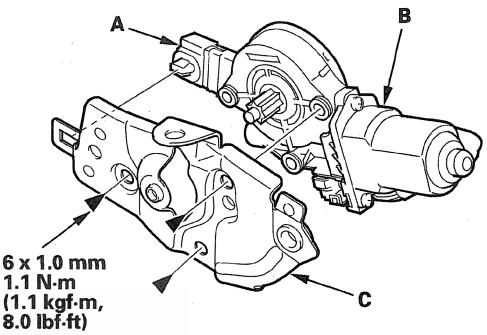

5. Install the motor in the reverse order of removal, and note these items:

   - Apply multipurpose grease to the pivot portions of the up-down adjuster and the motor pinion.
   - When installing the front up-down motor (A), adjust the gear (B) to the motor pinion (C) by slightly rotating the brake (D) with a 8 mm hex wrench.
   - Make sure the motor connector is plugged in properly.
   - Check the front seat up-down operation.

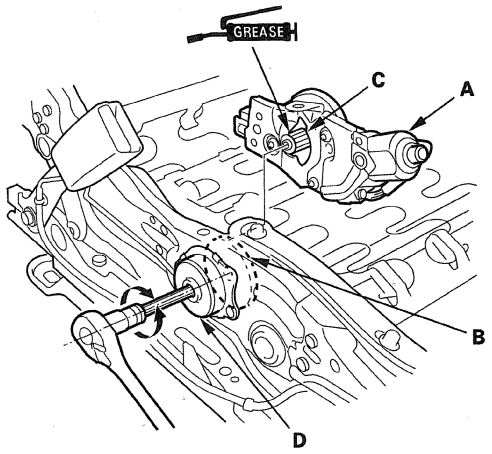

Rear Up-down Motor - 8-Way Power Seat

SRS components are located in this area. Review the SRS component locations (see page 24-12) and the precautions and procedures (see page 24-14) before doing repairs or service.

NOTE:
- Put on gloves to protect your hands.
- Take care not to tear or damage the seat covers.

Removal

1. Remove the front seat (see page 20-114).

2. Remove these items:

   - Seat-back cover/pad (see page 20-128)
   - Seat cushion cover/pad (see page 20-133)

3. Remove the rear brake (A) and the rear brake bracket (B) as an assembly.

   1 Using a TORX T30 bit, remove the brake bracket mounting bolts (C).
   2 Using a TORX T40 bit, remove the brake bracket mounting bolt (D).
   3 Pull the brake bracket back to remove the gear (E) from the brake gear axle.

Fastener Locations

C ▶ : TORX Bolt, 4 D ▶ : TORX Bolt, 1

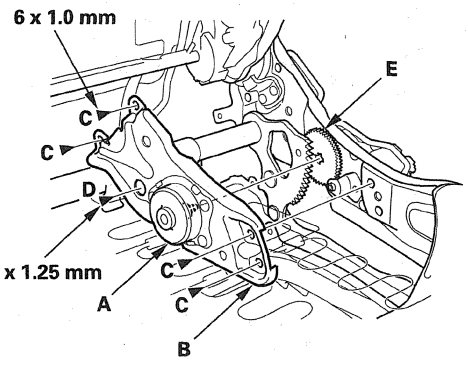

4. Remove the gear (A).

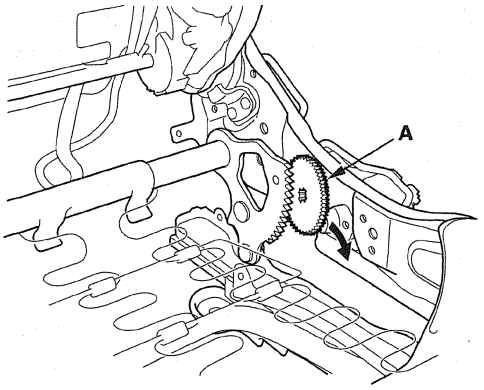

5. Manually lower the seat frame down fully to access the rear bolt securing the rear up-down motor.

6. Disconnect and detach the motor connector (A). Using a TORX T30 bit, remove the bolts, then remove the rear up-down motor (B).

Fastener Locations

▶ : TORX Bolt, 3

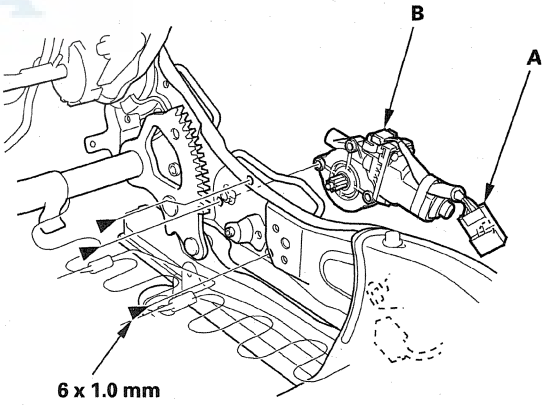

7. Apply multipurpose grease to the pivot portions of the up-down adjuster.

(cont'd)

Front Seat Up-down Motor Replacement (cont'd)

Installation

8. Using a TORX T30 bit, remove the bolts, then remove the rear brake (A) from the rear brake bracket (B).

Fastener Locations
▶ : TORX Bolt, 3



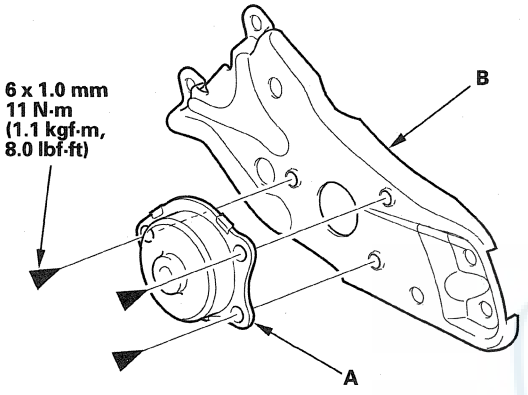

9. Apply multipurpose grease to the motor pinion.

10. Install the rear up-down motor (A). Using a TORX T30 bit, fasten the bolts. Connect the motor connector (B) and fasten the connector clip (C) to the seat frame. Make sure the connector is plugged in properly.

Fastener Locations
▶ : TORX Bolt, 3



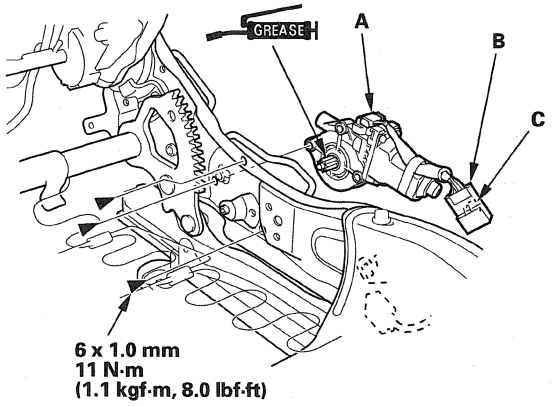

11. Manually raise the seat frame fully upward.

12. Install the gear (A) with its chamfered side faced the seat frame.

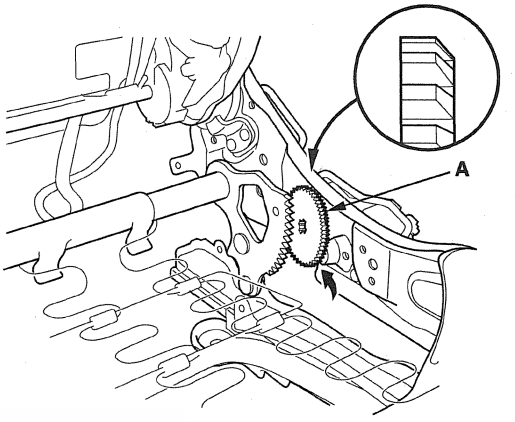

13. Install the rear brake bracket (A) without the rear brake to the seat frame. Using TORX T40 and T30 bits, lightly fasten all of the mounting bolts (B, C)

Fastener Locations
B ▶ : TORX Bolt, 4 C ▶ : TORX Bolt, 1



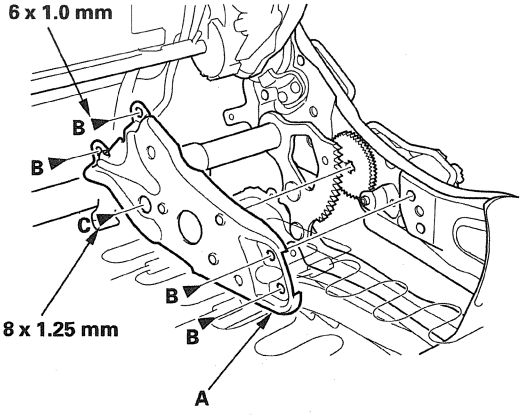

14. Carefully position the seat frame on its rear up-down motor side down.

15. Align the pinion (A) on the rear brake (B).

    1. Engage the gear (C) with the motor pinion by hand, and center it.
    2. Check the positions of the sector gear (D) and the cross-shaped hole (E) in the gear.
    3. Using a 8 mm hex wrench, align the pinion on the rear brake with the sector gear, and align the fingers (F) around the axle with the cross-shaped hole in the gear.

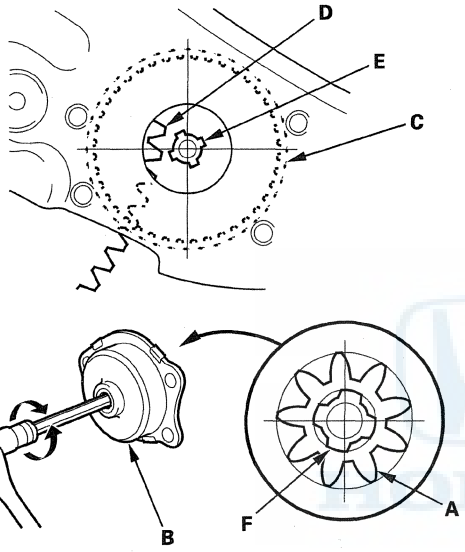

16. While holding the gear (A) perpendicular to the axle of the rear brake (B) by hand, install the rear brake on to the rear brake bracket (C).

    NOTE:
    - If you feel any interference between inside gears, remove the rear brake, and repeat step 15.
    - If the rear brake seats fully on the rear brake bracket with no interference, go to step 17.

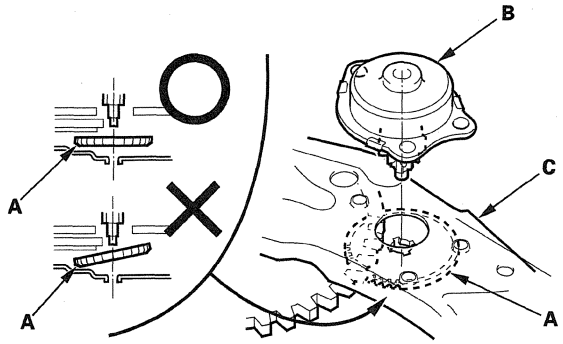

17. Install the rear brake mounting bolts (A), and using a TORX T30 bit, tighten them to their specified torque. Using TORX T40 and T30 bits, install the rear brake bracket mounting bolts (B, C) and tighten them to their specified torque.

Fastener Locations

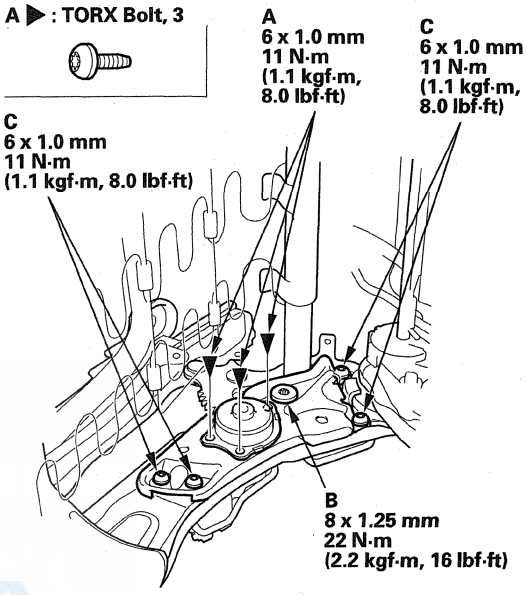

18. Reinstall all of removed parts to the seat frame:

    - Seat-back cover/pad (see page 20-128)
    - Seat cushion cover/pad (see page 20-133)

19. Reinstall the front seat (see page 20-114).

20. Check the front seat up-down operation.

Front Seat Frame Removal/Installation

Special Tools Required
KTC trim tool set SOJATP2014 *
* Available through the Acura Tool and Equipment Program; 888-424-6857

SRS components are located in this area. Review the SRS component locations (see page 24-12) and the precautions and procedures (see page 24-14) before doing repairs or service.

- Check the operation of the driver's seat position sensor after any of these actions (see page 24-30):
  – Driver's seat position sensor replacement
  – Cover plate (front side of driver's seat slide rail) replacement
- Do the seat weight sensor initialization (see page 24-27) after front passenger's seat frame replacement.

NOTE:
- Put on gloves to protect your hands.
- Take care not to tear or damage the seat covers.
- Use the appropriate tool from KTC trim tool set to avoid damage when removing components.
- If the side airbag has deployed, replace the seat frame and related parts with new ones (see page 24-194).

Driver's seat

1. Remove the front seat (see page 20-114).

2. Remove these items:

   - Front seat-back cover/pad (see page 20-128)
   - Front cushion cover/pad (see page 20-133)
   - Seat belt buckle (see page 24-6)
   - Side airbag (see page 24-202)
   - Front seat ventilation blower motor/duct (see page 20-137)

3. Detach the clip and hooks (A), then remove the upper rail outer cover (B).

Fastener Location
▷: **Clip, 1**

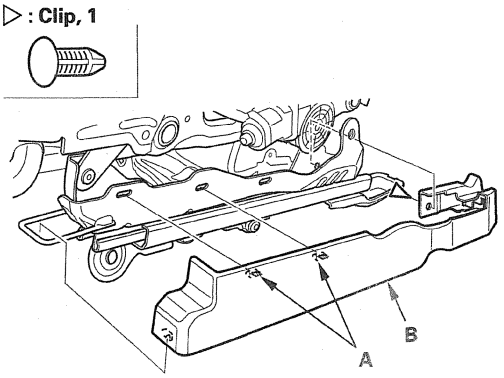

4. Remove the recline inner cover (A) and the center inner cover (B) from the seat frame (C).

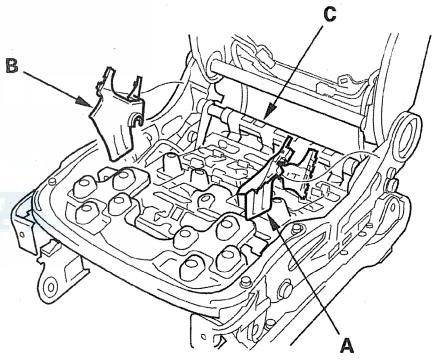

5. Detach the clip, then remove the rear inner cover (A).

Fastener Location

▷: **Clip, 1**

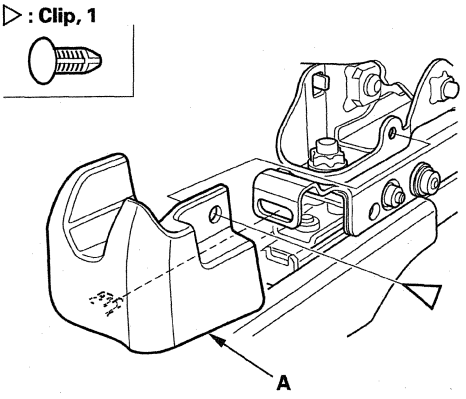

6. Install the new seat frame in the reverse order of removal, and note these items:

   - If the clips are damaged or stress-whitened, replace them with new ones.
   - Push the clips into place securely.

Passenger's seat

1. Remove the front seat (see page 20-114).

2. Remove these items:

   - Front seat-back cover/pad (see page 20-128)
   - Front cushion cover/pad (see page 20-133)
   - Seat belt buckle (see page 24-6)
   - Side airbag (see page 24-202)
   - ODS unit (see page 24-220)

3. Remove the recline inner cover (A) and the center inner cover (B) from the seat frame (C).

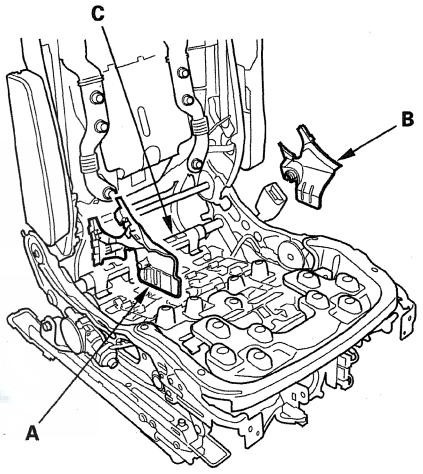

(cont'd)

Front Seat Frame Removal/ Installation (cont'd)

4. Detach the clip, then remove the rear inner cover (A).

Fastener Location

▷ : **Clip, 1**

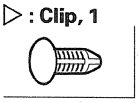

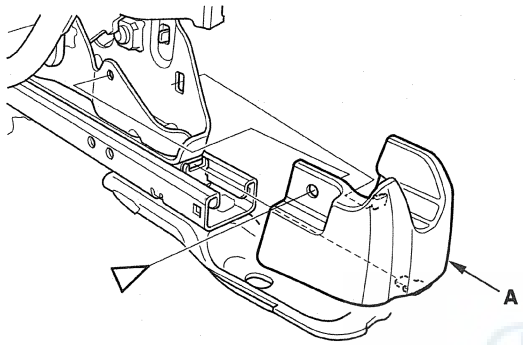

5. Install the new seat frame in the reverse order of removal, and note these items:

   - If the clips are damaged or stress-whitened, replace them with new ones.
   - Push the clips into place securely.

Front Seat-back Cover Replacement

Special Tools Required

- KTC trim tool set SOJATP2014 *
- Trim pad remover, Snap-on A 177A or equivalent, commercially available

* Available through the Acura Tool and Equipment Program; 888-424-6857

SRS components are located in this area. Review the SRS component locations (see page 24-12) and the precautions and procedures (see page 24-14) before doing repairs or service.

- Check the operation of the driver's seat position sensor after any of these actions (see page 24-30):
  - Driver's seat position sensor replacement
  - Cover plate (front side of driver's seat slide rail) replacement
- Do the OPDS sensor initialization (see page 24-26) after front passenger's seat-back cover replacement.

NOTE:

- Put on gloves to protect your hands.
- Take care not to tear or damage the seat covers.
- On the passenger's seat, do not touch the OPDS sensor in the seat-back pad, and keep it away from oil. Oil can corrode the sensor causing it to fail.
- Use the appropriate tool from the KTC trim tool set to avoid damage when removing components.

1. Remove the front seat (see page 20-114).

2. From under the seat cushion, release the hook strap (A) from the seat cushion frame springs (B), then pull the undercover (C) of the back cover.

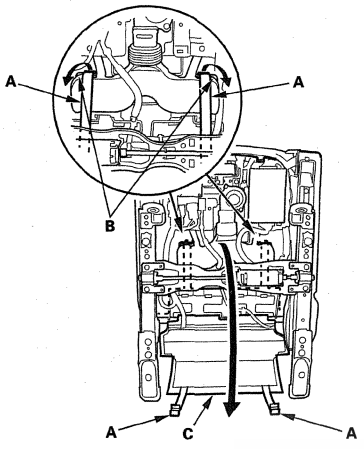

3. Insert a trim pad remover between the bottom of the back cover (A) and the seat frame until it squarely engages one of the clips. Gently pry on the clip until it detaches from the seat frame. Repeat for the other clip. Gently pull the back panel back to release the hooks (B), then pull the panel down to release the hooks (C).

NOTE:
- *The clips usually break during removal. Always replace the clips with new ones.*
- Detach the clips and the hooks in the numbered sequence as shown.
- Take care not to damage the seat-back panel or the clip mounting pads.

Fastener Locations
▷: **Clip, 2**

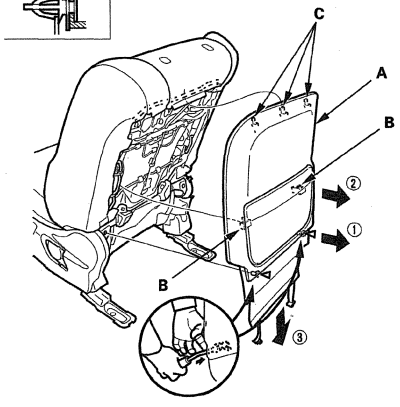

4. Release the Velcro fasteners (A) and the hook strips (B), then loosen the seat-back cover (C).

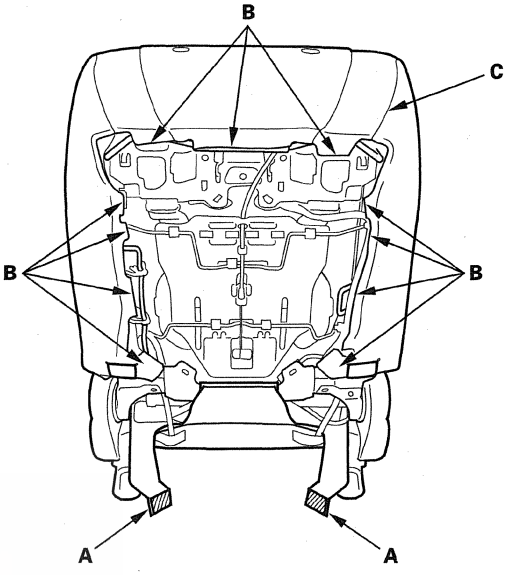

(cont'd)

Front Seat-back Cover Replacement (cont'd)

5. Driver's seat: Disconnect the seat-back heater connector (A), and detach the harness clip (B).

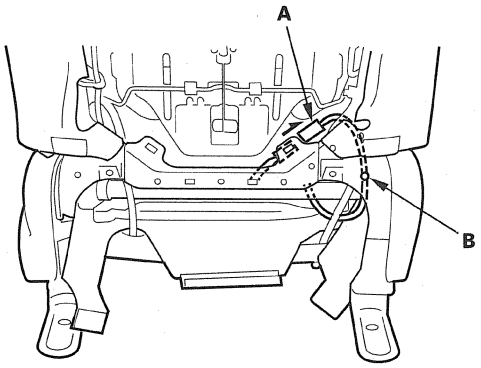

6. Pull out the seat-back ventilation duct (A) from the seat-back cushion (B) both sides.

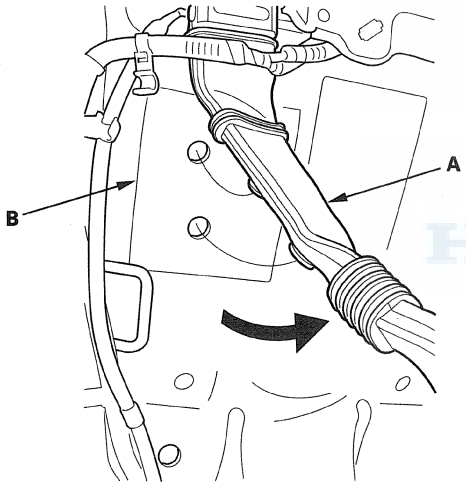

7. Release airbag attachment wire A and airbag attachment wire B from seat-back frame (C).

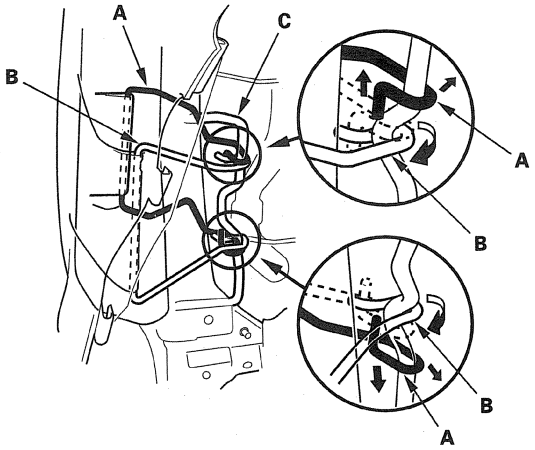

8. Passenger's seat: Remove the ODS unit cover (A).
   1. Turn over the seat-back cover (B) and pad (C) as needed.
   2. Release the cover from the lower hooks (D).
   3. Pull the cover upward to release it from the upper hook (E).

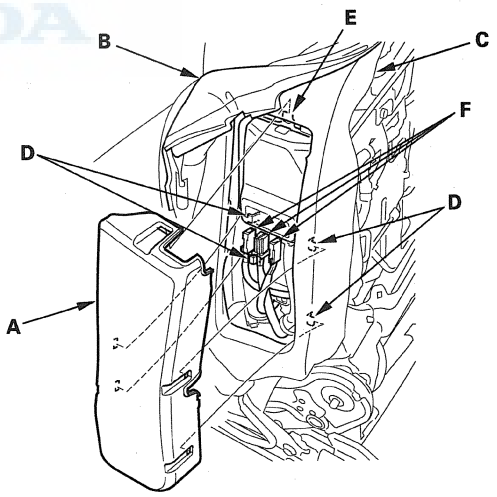

9. Passenger's seat: Disconnect the OPDS sensor connectors (F).

10. Passenger's seat: Detach the harness clips (A) fastening the OPDS sensor harnesses (B), and release the wire harness from the harness holder (C).

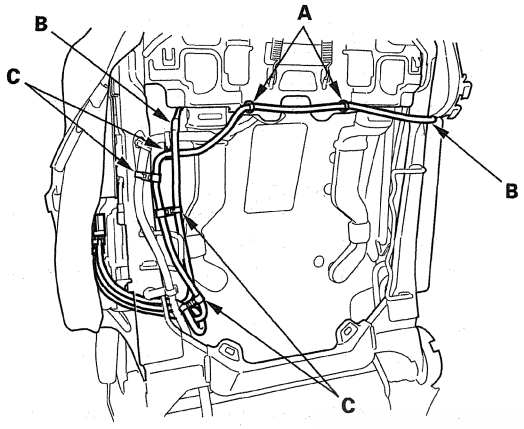

11. Pull out the head restraint guides (A) while pinching the tabs on the end of the guides, and remove them.

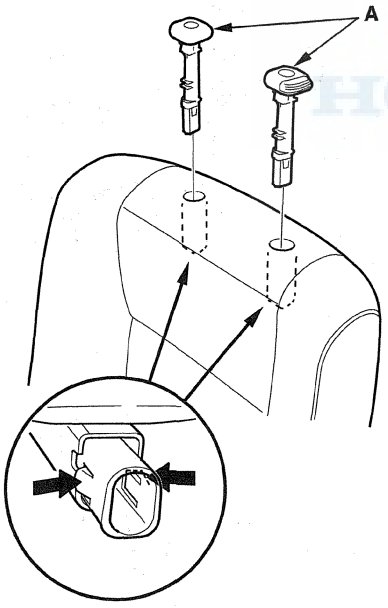

12. Remove the seat-back cover/pad (A) from the seat-back frame (B).

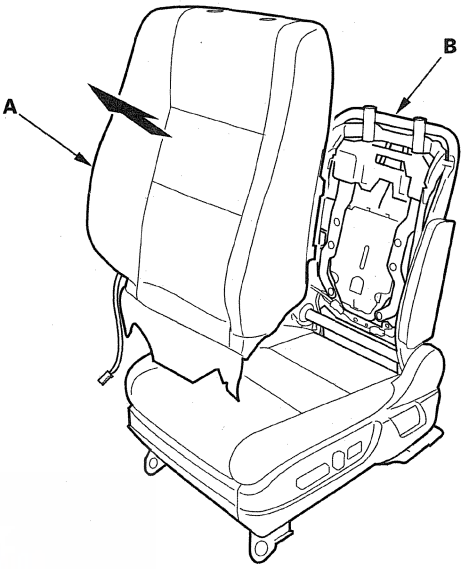

13. Pull back the edge of the seat-back cover all the way around, and release the upholstery rings (A), then remove the seat-back cover (B).

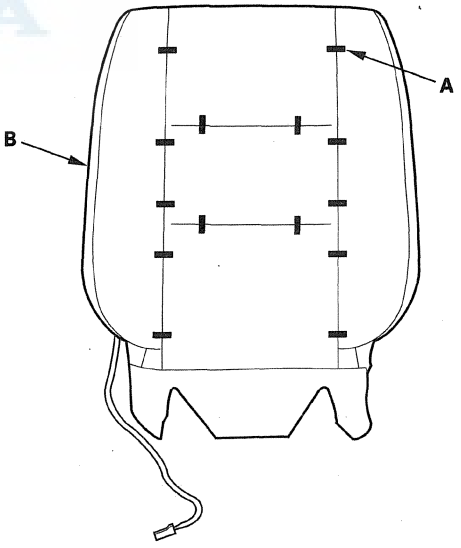

(cont'd)

Front Seat-back Cover Replacement (cont'd)

14. Remove airbag attachment wire B from the outside reinforcing cloths (C). Remove airbag attachment wire A and the inside reinforcing cloths (D), then remove the wires.

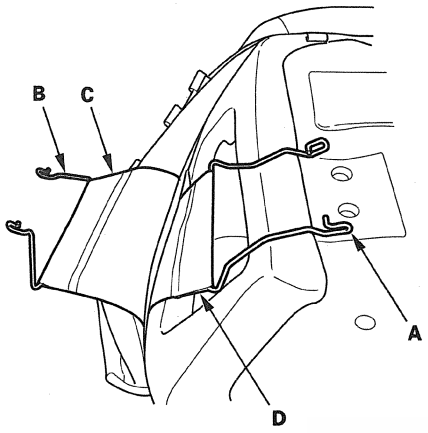

15. Install the cover in the reverse order of removal, and note these items:

- To prevent wrinkles when installing a seat-back cover, make sure the material is stretched evenly over the pad before securing the clips, the hooks, and the hook strips.
- Before installing the seat-back cover, make sure airbag attachment wires (A, B) are installed to the reinforcing cloths (C) correctly, and wires A and B are securely assembled.
- Replace any upholstery rings you removed with new ones (D). Install them with commercially available upholstery ring pliers (E).
- Use only original Honda replacement seat-back covers.
- Make sure the seat-back heater harness, and the OPDS sensor harness (passenger's seat) are routed properly.
- Replace the back cover clips with new ones.

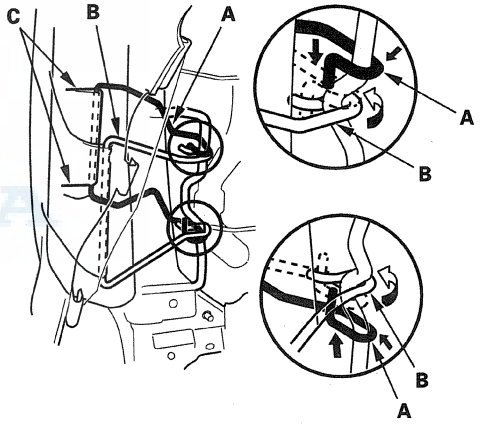

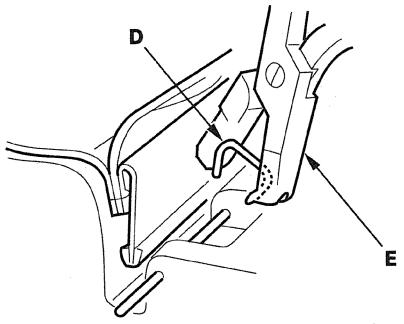

Front Seat Cushion Cover Replacement

Special Tools Required
KTC trim tool set SOJATP2014 *
* Available through the Acura Tool and Equipment Program; 888-424-6857

SRS components are located in this area. Review the SRS component locations (see page 24-12) and the precautions and procedures (see page 24-14) before doing repairs or service.

NOTE:
- Put on gloves to protect your hands.
- Take care not to tear or damage the seat covers.
- Use the appropriate tool from KTC trim tool set to avoid damage when removing components.

1. Remove the front seat (see page 20-114).

2. Remove the screw, and release the hook (A), the tabs (B), and the pin (C), then remove the front cover (D).

Fastener Location
▶ : Screw, 1

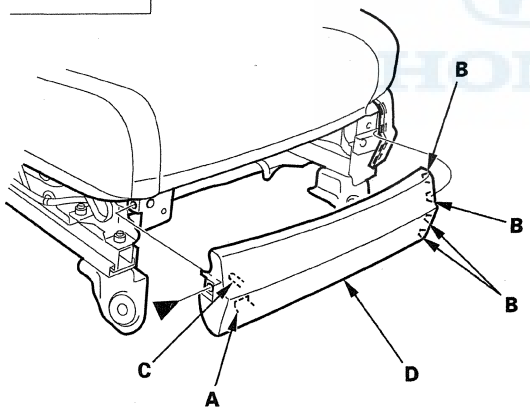

3. Remove the recline cover (A).

-1 Remove the screw, and detach the clip.
-2 Detach the tabs (B).
-3 Pull up the cover, then release the hook (C) and the tab (D).
-4 Remove the upper inner cover (E).
-5 Disconnect the power seat adjustment switch connector (F) and the lumbar support switch connector (G).
-6 Remove the wire harness (H) from the hooks (I).

Fastener Locations
▶ : Screw, 1 ▷ : Clip, 1

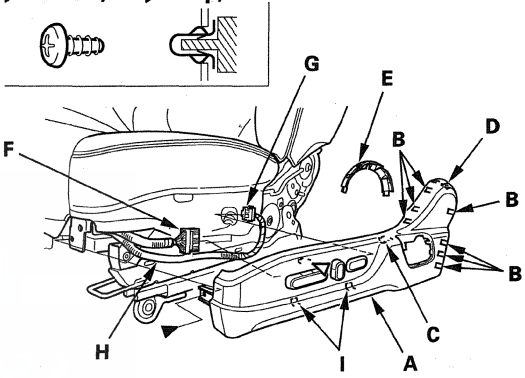

4. Remove the center cover (A).

-1 Remove the screw.
-2 Detach the tabs (B).
-3 Pull up the cover, then release the tab (C).

Fastener Location
▶ : Screw, 1

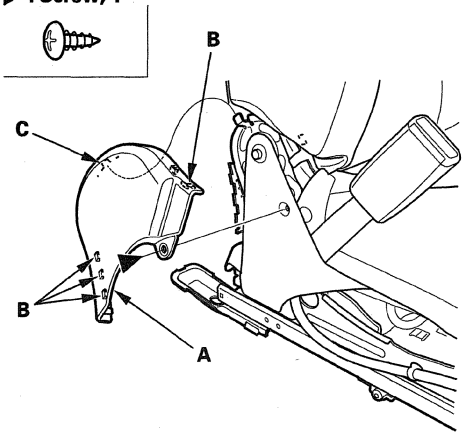

(cont'd)

Front Seat Cushion Cover Replacement (cont'd)

5. From under the seat cushion, release the hook strap (A) from the seat cushion frame springs (B), then pull the undercover (C) of the back cover back.

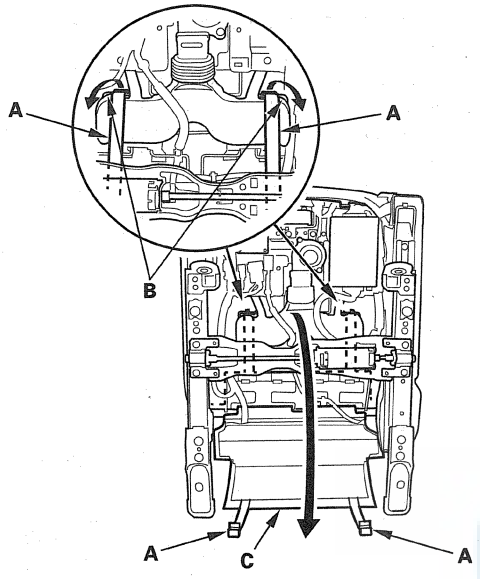

6. Disconnect the seat cushion heater connector (A) and detach the harness clip (B).

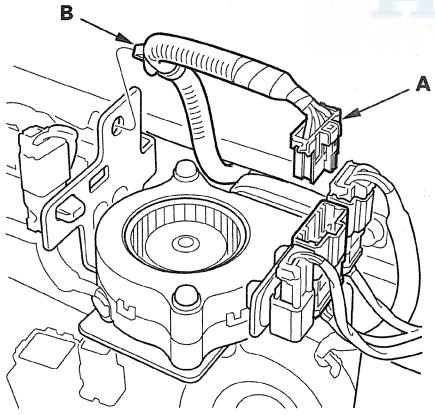

7. Release the Velcro fasteners (A), then pull back the harness holder covers (B) fastening the side airbag harness (C) and the seat wire harness (D).

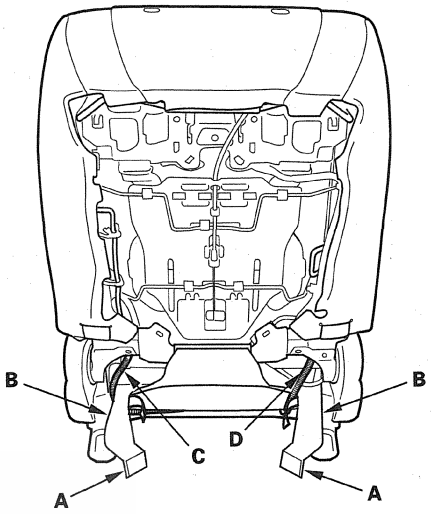

8. Remove the clip, then remove the cloth (A) of the seat cushion cover from the connecting rod (B) and release the hook strips (C) from both sides of the seat cushion frame.

Fastener Location

▷ : **Clip, 1**

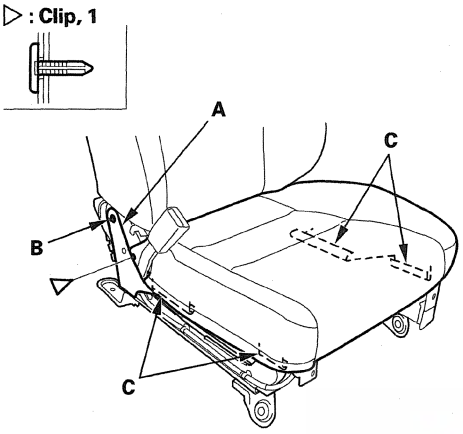

9. Release the hook strips (A) from the under the seat cushion.

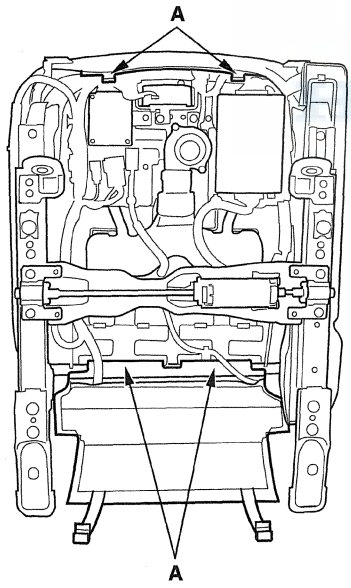

10. Remove the seat cushion cover/pad (A) from the seat frame (B).

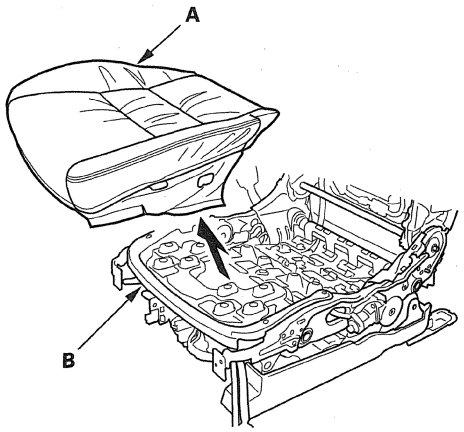

11. Release the hooks (A) from under the seat cushion (B).

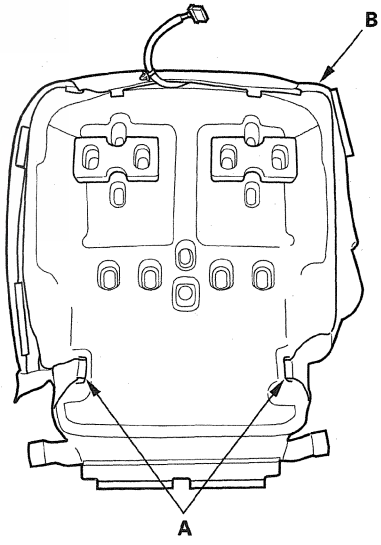

(cont'd)

Front Seat Cushion Cover Replacement (cont'd)

12. Pull back the edge of the seat cushion cover all the way around, and release the upholstery rings (A), then remove the seat cushion cover (B).

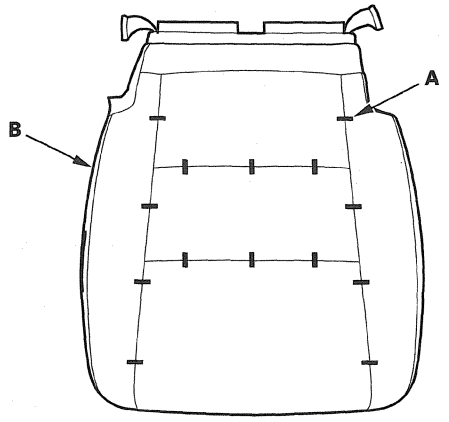

13. Install the cover in the reverse order of removal, and note these items:

    - To prevent wrinkles when installing a seat-back cover, make sure the material is stretched evenly over the pad before securing the clips, the hooks, and the hook strips.
    - Replace any upholstery rings you removed with new ones (A). Install them with commercially available upholstery ring pliers (B).

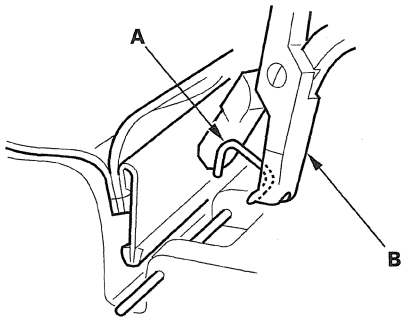

Front Seat Ventilation Blower Motor/Duct Replacement

Seat-back Blower Motor/Duct

SRS components are located in this area. Review the SRS component locations (see page 24-12) and the precautions and procedures (see page 24-14) before doing repairs or service.

NOTE:
- Take care not to tear or damage the seat covers.
- Put on gloves to protect your hands.

1. Remove the front seat (see page 20-114).

2. Remove the seat-back cover and the pad (see page 20-128).

3. Disconnect the connector (A) and remove the screws, then remove the blower motor/duct (B) from the seat-back frame.

Fastener Locations

▶ : Screw, 2

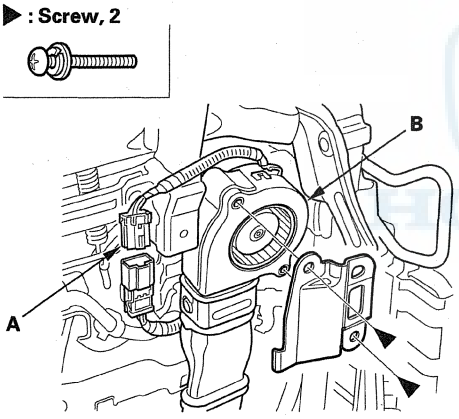

4. Remove the clips, then separate the duct (A, B) and the blower motor (C, D).

Fastener Locations

▷ : Clip, 4

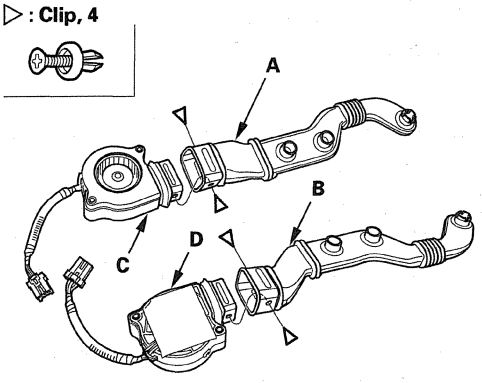

5. Install the blower motor/duct in the reverse order of removal.

NOTE: If the clips are damaged or stress-whitened, replace them with new ones.

(cont'd)

Front Seat Ventilation Blower Motor/Duct Replacement (cont'd)

Seat Cushion Rear Blower Motor/Duct

SRS components are located in this area. Review the SRS component locations (see page 24-12) and the precautions and procedures (see page 24-14) before doing repairs or service.

NOTE:
- Take care not to tear or damage the seat covers.
- Put on gloves to protect your hands.

1. Remove the front seat (see page 20-114).

2. Remove the front seat cushion cover (see page 20-133).

3. Disconnect the blower motor connector (A), then remove the connector from the bracket.

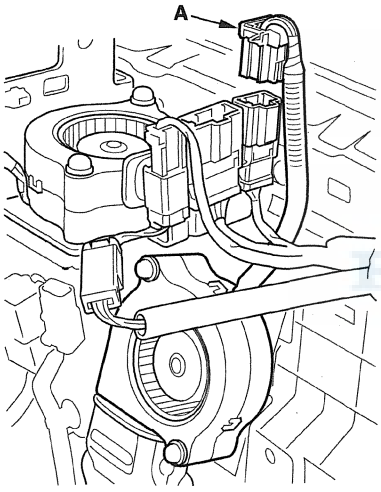

4. Release the wire bands (A) and clips (B) securing the blower duct (C) to the seat cushion springs (D).

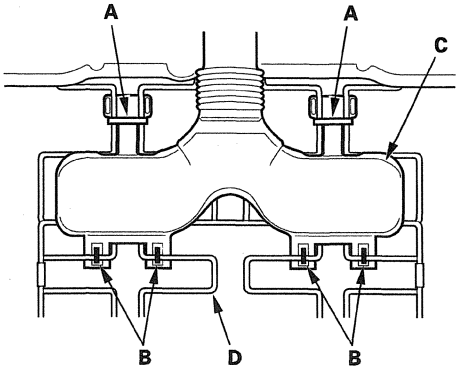

5. Remove the screws, and release the hooks (A) from the cushion frame wire, then remove the blower motor/duct (B).

Fastener Locations

▶ : Screw, 2

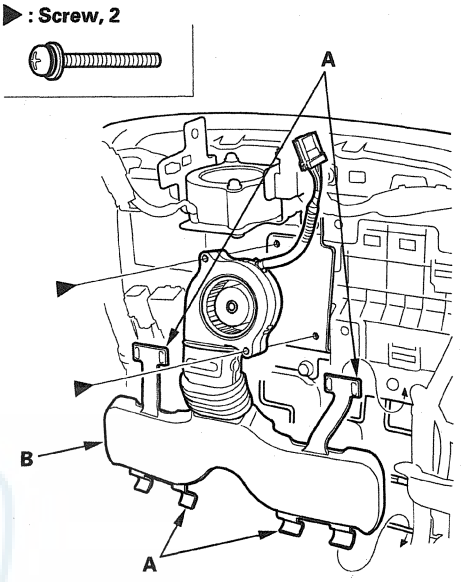

6. Remove the clips, then separate the duct (A) and the blower motor (B).

Fastener Locations

▷ : Clip, 2

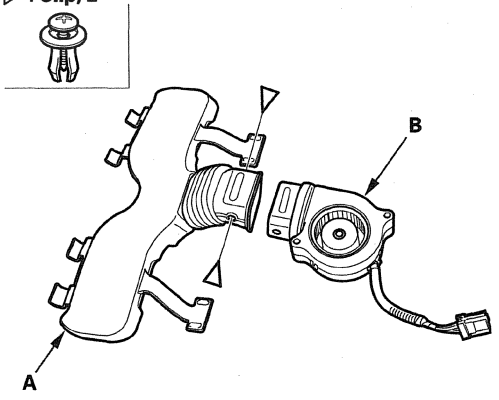

7. Install the blower motor/duct in the reverse order of removal.

NOTE: If the clips are damaged or stress-whitened, replace them with new ones.

Seat Cushion Front Blower Motor

NOTE:
- Take care not to tear or damage the seat covers.
- Put on gloves to protect your hands.

1. Remove the front seat (see page 20-114).
2. Remove the front seat cushion cover (see page 20-133).
3. Disconnect the blower motor connector (A), and remove the screws, then remove the blower motor (B) from the duct.

Fastener Locations

▶ : Screw, 2

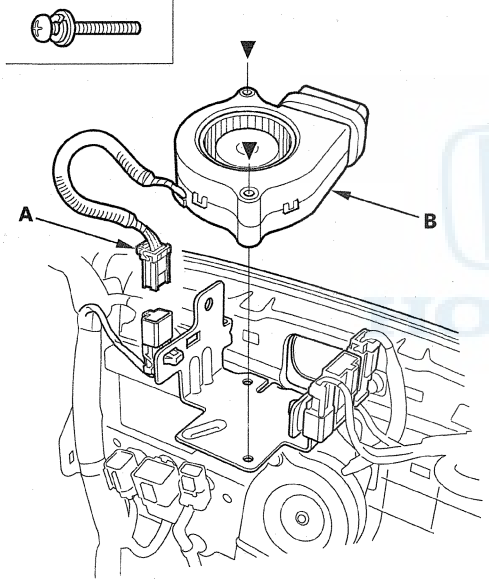

4. Install the blower motor in the reverse order of removal.

Seat Cushion Front Duct

NOTE:
- Take care not to tear or damage the seat covers.
- Put on gloves to protect your hands.

1. Remove the front seat (see page 20-114).
2. Remove the seat-back cover (see page 20-128).
3. Remove the front seat cushion cover/pad (see page 20-133).
4. Remove the screws, then remove the duct (A).

Fastener Locations

▶ : Screw, 2

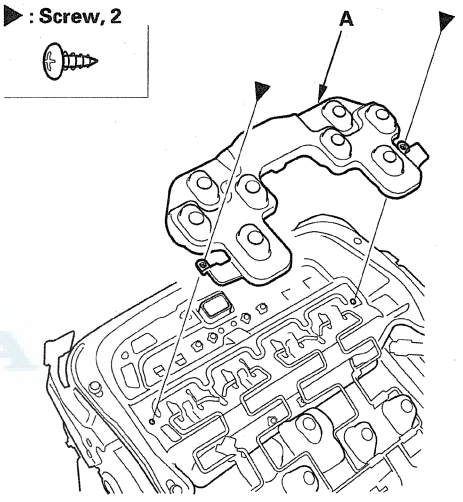

5. Install the duct in the reverse order of removal.

Rear Seat Removal/Installation

NOTE: Take care not to scratch the body or tear the seat covers.

1. While pushing down on the seat cushion (A), pull the seat hook handles (B) to release the hooks (C).

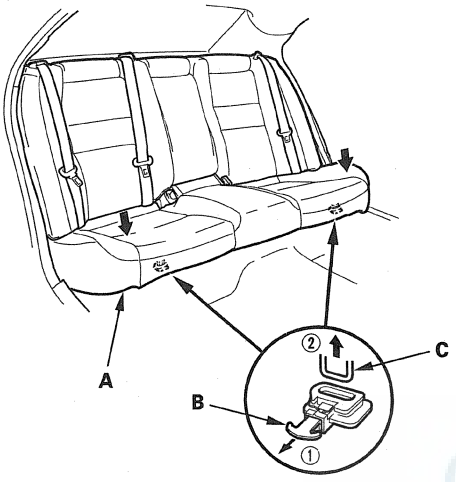

2. Remove the seat cushion (A), and release the center seat belt buckles (B) from their slits (C).

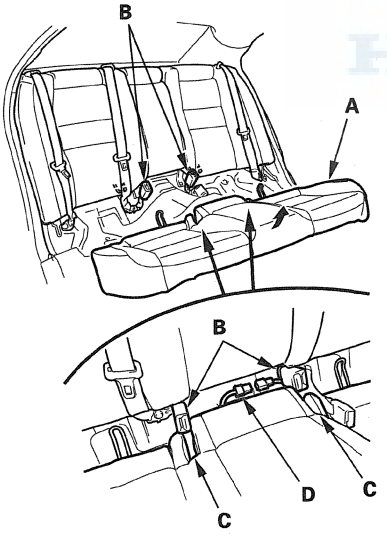

3. Disconnect the seat cushion heater connector (D) (if equipped).

4. Release the seat belt (A) from their guides (B).

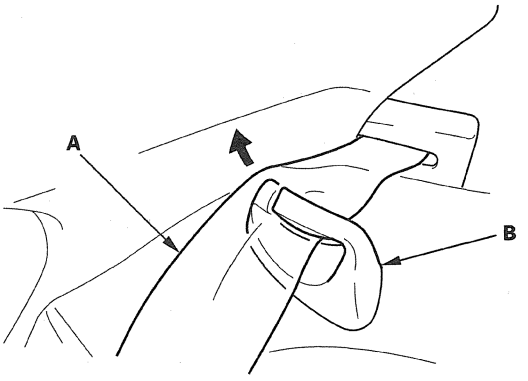

5. Remove the rear center seat belt and the rear seat belt buckles (see step 2 on page 24-9).

6. Remove the bolts from the base of the seat-back (A).

Fastener Locations

▶ : Bolt, 4

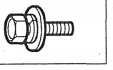

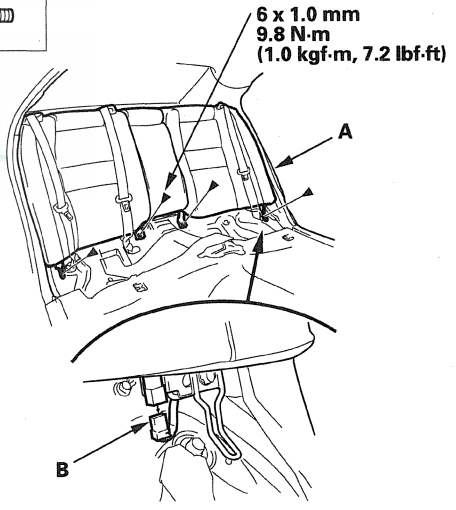

7. Disconnect the power head restraint and the seat-back heater (if equipped) connector (B).

8. Lift the seat-back (A) up to release the wire loops (B) from the hooks (C) on the body, then remove the seat-back.

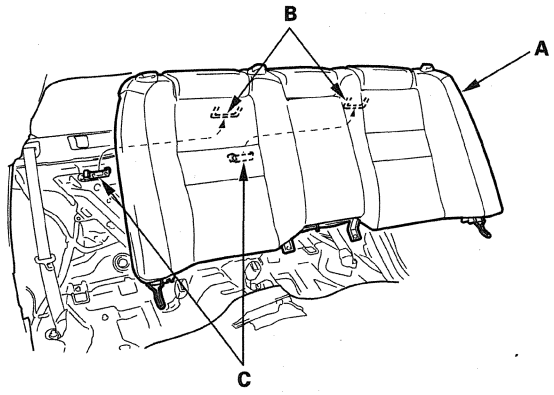

9. Install the seat in the reverse order of removal, and note these items:

- Guide the belts over the front of the seat-back as you install it.
- Before attaching the rear seat-back and the cushion, make sure there are no twists or kinks in the seat belts.
- When installing the seat cushion, slip the seat belt buckles through the slits in the seat cushion.
- Make sure the connector is plugged in properly.

Rear Seat Armrest Beverage Holder Replacement

Special Tools Required
KTC trim tool set SOJATP2014 *
* Available through the Acura Tool and Equipment Program; 888-424-6857

NOTE:
- Take care not to tear or damage the seat covers.
- Use the appropriate tool from the KTC trim tool set to avoid damage when removing components.

1. Detach the hooks (A), then remove the beverage holder cover (B).

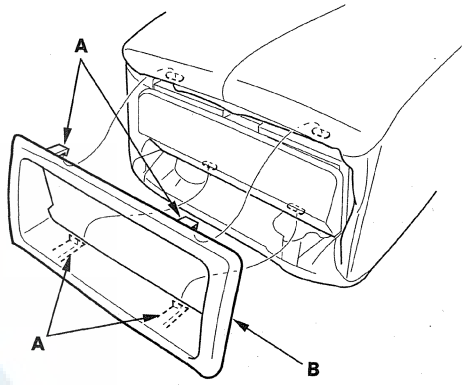

2. Remove the screws, then pull out on the beverage holder (A) to release the hooks (B).

Fastener Locations
▶ : Screw, 2

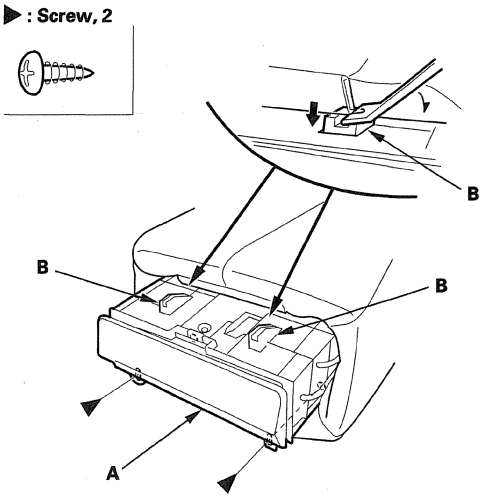

3. Install the beverage holder in the reverse order of removal.

Rear Seat Armrest Replacement

NOTE: Take care not to tear or damage the seat covers.

1. Remove the rear seat-back (see page 20-140).

2. Open the trunk pass-through cover (A), and remove the screws, then separate the armrest cover (B) from the trunk pass-through cover.

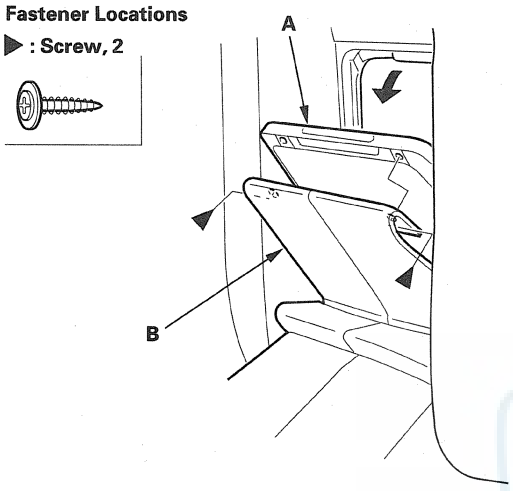

3. Remove the screws, and detach the hooks (A), then remove the upper cover (B). Remove the spring (C).

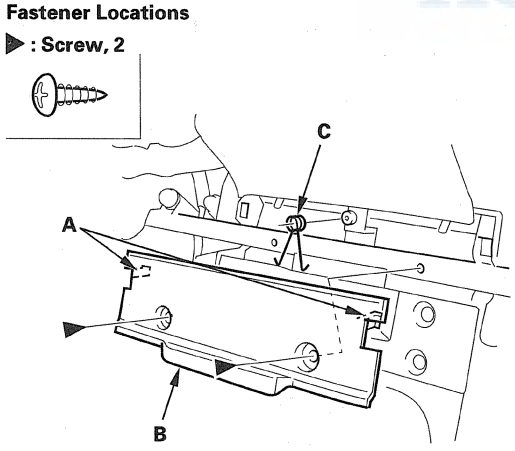

4. Release the Velcro fastener (A), then pull back the upper flap (B). Remove the screws, then remove the trunk pass-through cover (C).

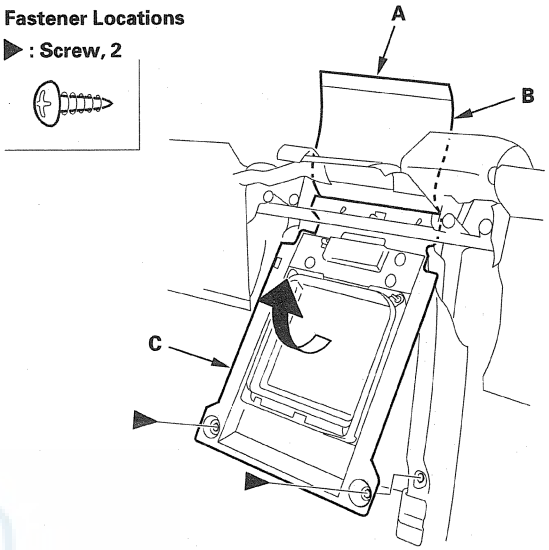

5. Remove the bolts (A) and the screws (B), and remove the armrest (C) from the seat-back frame.

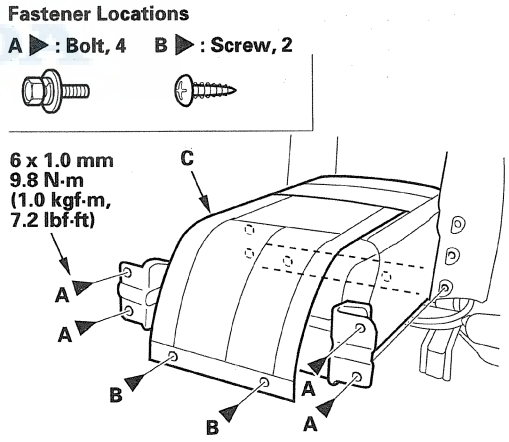

6. Install the armrest in the reverse order of removal.

Trunk Pass-through Cover Key Cylinder Replacement

NOTE: Take care not to tear or damage the seat covers.

1. Remove the rear seat-back (see page 20-140).
2. Remove the screws, and detach the hooks (A), then remove the upper cover (B).

Fastener Locations

▶ : Screw, 2

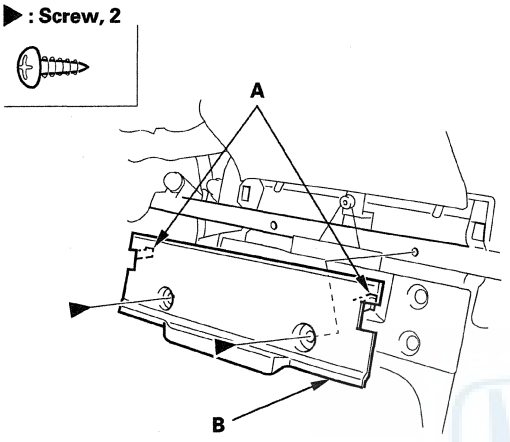

3. Remove the screws, and detach the hook (A), then remove the key cover (B), and release the hook (C).

Fastener Locations

▶ : Screw, 3

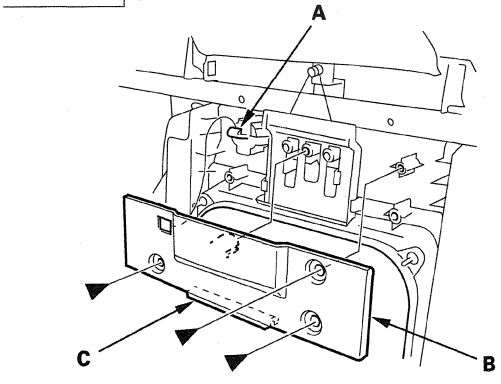

4. Remove the retainer clip (A), then remove the trunk pass-through cover key cylinder (B) from the lid (C).

NOTE: Wear eye protection when doing this step.

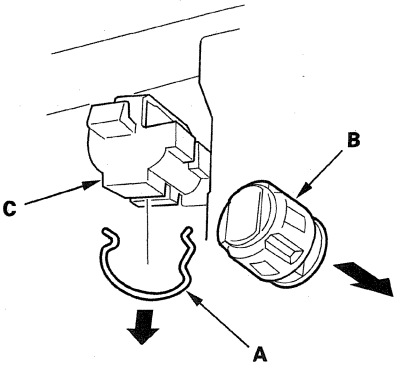

5. Install the key cylinder in the reverse order of removal, and make sure the trunk pass-through cover opens properly, and locks securely.

HONDA

Rear Seat Head Restraint Replacement

NOTE: Take care not to tear or damage the seat covers.

1. Remove the rear seat-back (see page 20-140).
2. Remove the seat-back cover/pad (see page 20-146).
3. Disconnect the connector (A), and detach it from the seat-back frame. Detach the wire harness clip (B), and remove the harness band (C) (right side head restraint only).

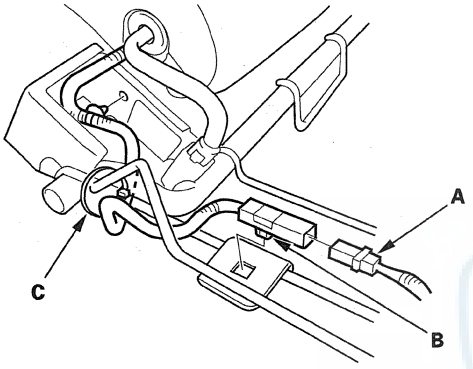

4. Remove the retainers (A) from both head restraint guides (B), then remove the head restraint (C). Remove both head restraint guides.

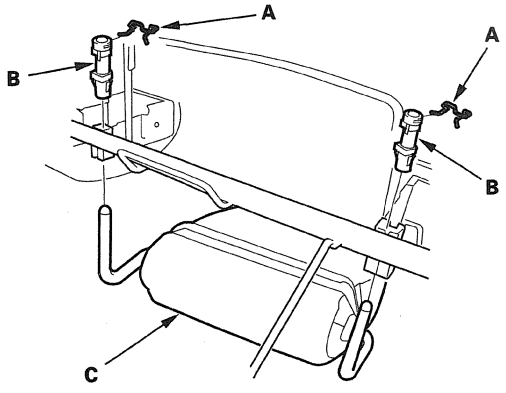

5. Install the head restraint in the reverse order of removal.

Rear Seat Head Restraint Actuator/ Wire Harness Replacement

NOTE: Take care not to tear or damage the seat covers.

1. Remove the rear seat-back (see page 20-140).
2. Detach the hooks (A), and release the hooks (B), then remove the head restraint case (C) from the head restraint (D).

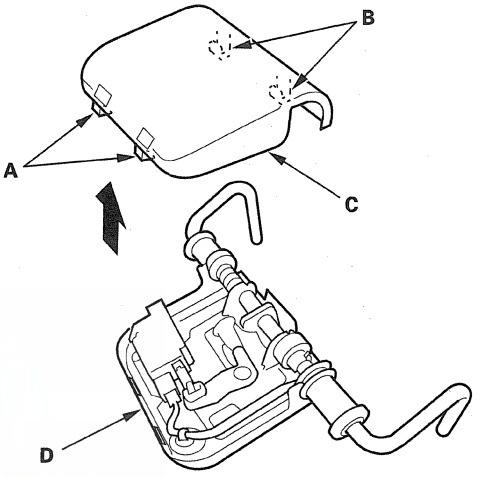

3. Remove the actuator wire harness (A).
   1. Detach the hooks (B), then remove the guide (C).
   2. Remove the connector clip (D) from the connector (E).
   3. Remove the head restraint pillar trim (F).
   4. Disconnect the actuator connector (G), and detach the harness clip (H) from the head restraint base (I).

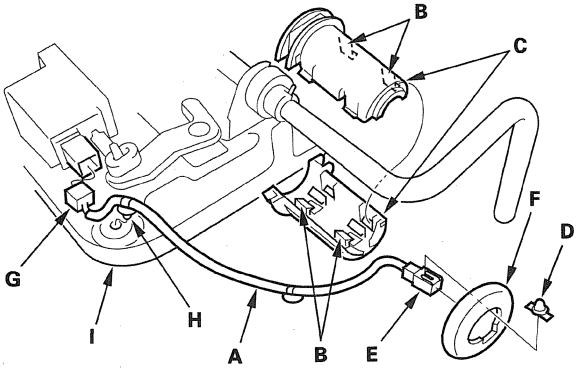

4. Carefully remove the foam as needed from the frame. Remove the screws, and release the arm (A) from the hook (B), then remove the actuator (C).

Fastener Locations

▶ : Screw, 2

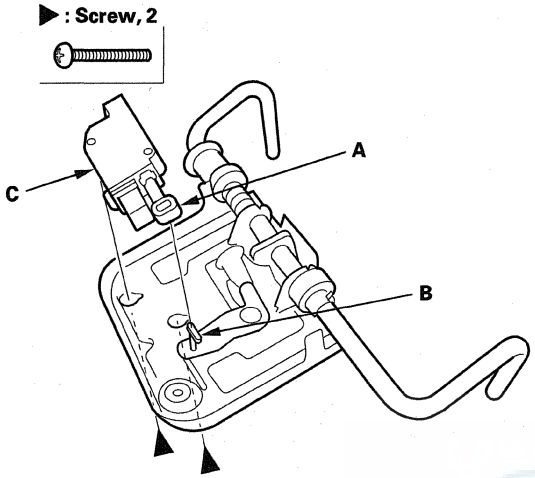

5. Install the actuator and the wire harness in the reverse order of removal.

Rear Seat-back Upper Flap Replacement

NOTE: Take care not to tear or damage the seat covers.

1. Remove the rear seat-back (see page 20-140).

2. Release the Velcro fastener (A), then pull back the upper flap (B). Detach the clips, then remove the upper flap from the head restraint lid.

Fastener Locations

▷ : Clip, 2

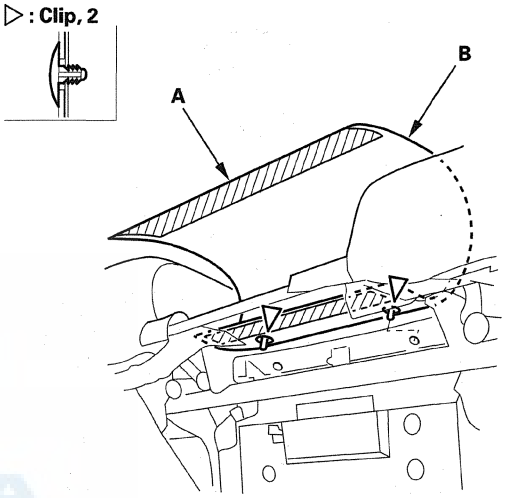

3. Install the upper flap in the reverse order of removal.

Rear Seat-back Cover Replacement

NOTE:
- Take care not to tear or damage the seat covers.
- Put on gloves to protect your hands.

1. Remove the seat-back (see page 20-140).
2. Remove the armrest (see page 20-142).
3. Release the hooks (A), the Velcro fasteners (B), the hooks (C) and the clips (D).

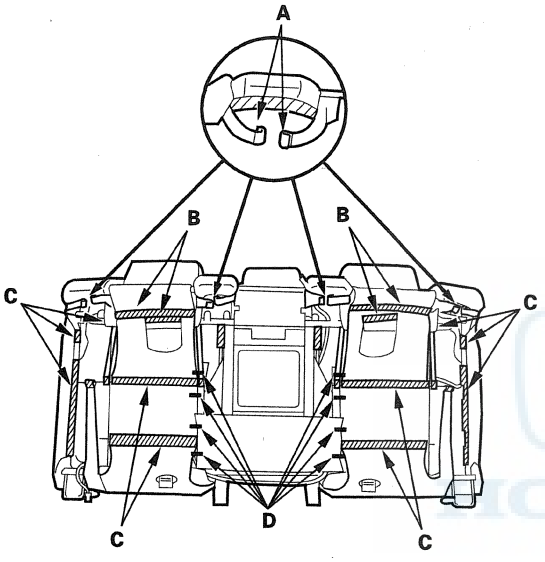

4. Remove the screws, then remove the center belt guide (A).

Fastener Locations
▶ : Screw, 2

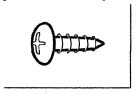

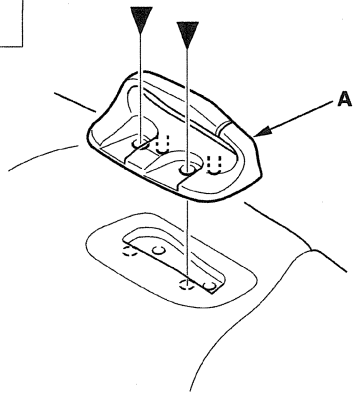

5. Separate the seat-back covers/pads (A) and the seat-back frame (B).

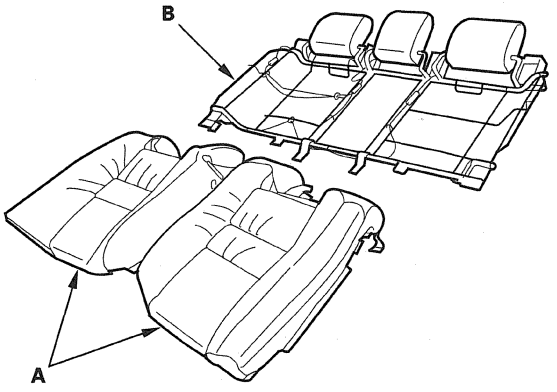

6. Pull back the edge of the seat-back cover (A) all the way around, and release the upholstery rings (B), then remove the seat-back cover.

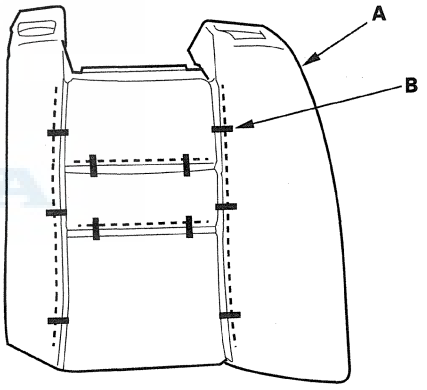

7. Install the cover in the reverse order of removal, and note these items:
   - To prevent wrinkles when installing a seat-back cover, make sure the material is stretched evenly over the pad before securing the hook strips, and the clips.
   - Replace any upholstery rings you removed with new ones. Install them with commercially available upholstery ring pliers.

Rear Seat Cushion Cover Replacement

1. Remove the rear seat cushion (see page 20-140).

2. Release all the upholstery rings (A) from under the seat cushion, and fold back the seat cushion cover.

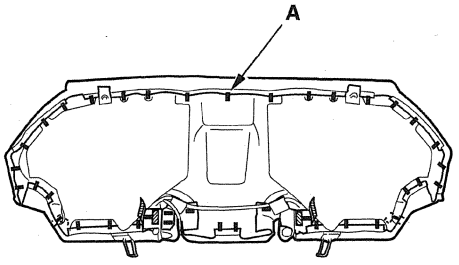

3. Pull back the edge of the seat cushion cover all the way around, and release the upholstery rings (A), then remove the seat cushion cover.

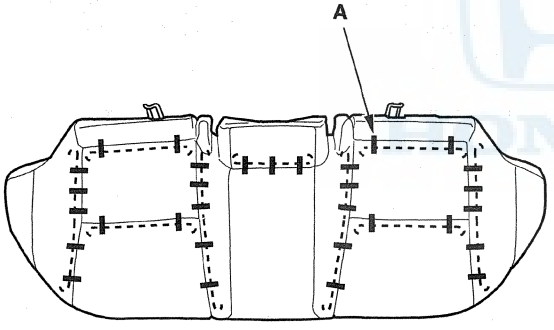

4. Install the cover in the reverse order of removal, and note these items:

   - To prevent wrinkles, make sure the material is stretched evenly over the pad before securing the clips.
   - Replace any upholstery rings (A) you removed with new ones. Install them with commercially available upholstery ring pliers (B).

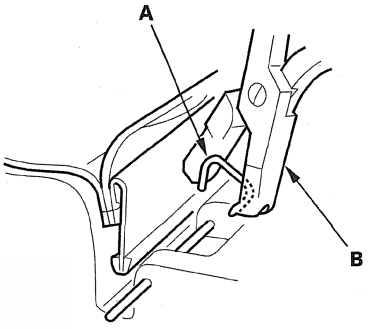

Rear Seat Head Restraint Cover/Pad Replacement

NOTE: Take care not to tear or damage the seat covers.

1. Remove the head restraint (see page 20-144).
2. Unzip the head restraint cover (A), pull it back, and remove it.

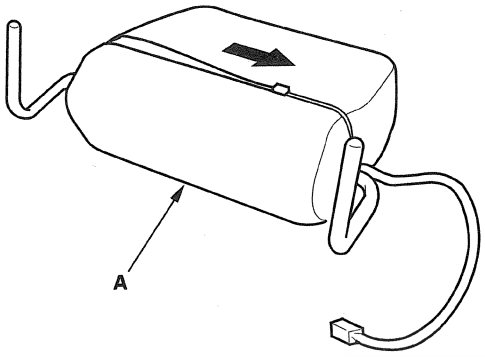

3. Separate the double-sided adhesive tapes (A), then remove the head restraint pad (B) and the head restraint pad molding (C) from the head restraint frame (D).

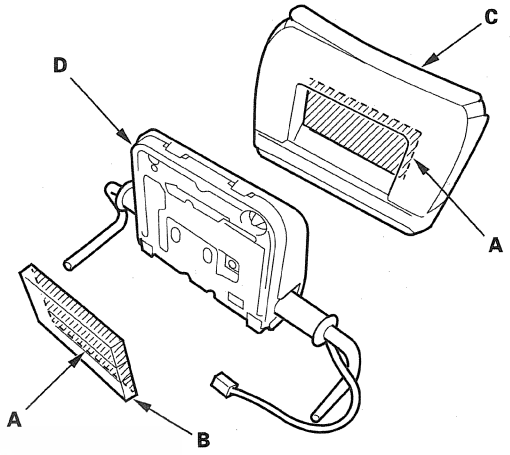

4. Scrape off the remaining double-sided adhesive tape from the head restraint frame, then clean its surface with a shop towel dampened with isopropyl alcohol.
5. Install the cover and pads in the reverse order of removal.

Front Bumper Removal/Installation

Special Tools Required
Push pin puller 07AAC-SJAA100

NOTE:
- Use the special tool to remove the clips.
- Have an assistant help you when removing and installing the front bumper.
- Take care not to scratch the front bumper and the body.
- Put on gloves to protect your hands.

1. Remove these items:
   - Front air spoiler (see page 20-151)
   - Upper grille cover (see page 20-163)

2. Remove the bolts (A, B), screws (C), and the clips (D) securing the front bumper (E).

Fastener Locations

A ▶ : Bolt, 2 B ▶ : Bolt, 4 C ▶ : Screw, 2

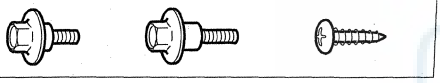

D ▷ : Clip, 2

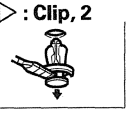

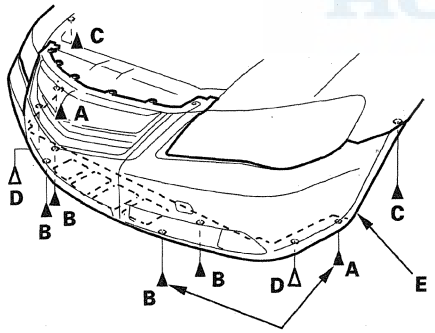

6 x 1.0 mm
9.8 N·m
(1.0 kgf·m, 7.2 lbf·ft)

3. Pull on the front bumper (A) at the wheel arch areas to release it from the hooks (B) on the side spacers (C).

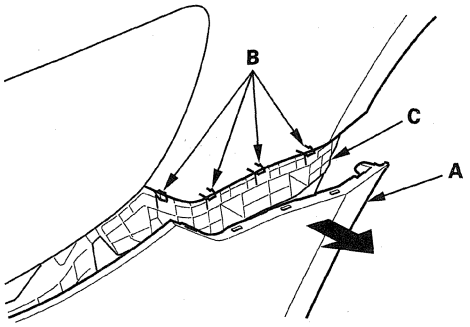

4. With the help of an assistant, pull the wheel arch portion away from the side spacer (A) while pulling the front bumper (B) to release the bumper from the hooks (C) on the corner upper beam (D).

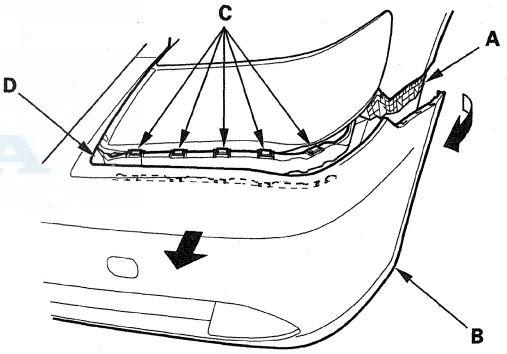

(cont'd)

Front Bumper Removal/Installation (cont'd)

5. Disconnect the front fog light connectors (A), outside temperature sensor connector (B), and the headlight washer tube (C), then remove the front bumper (D).

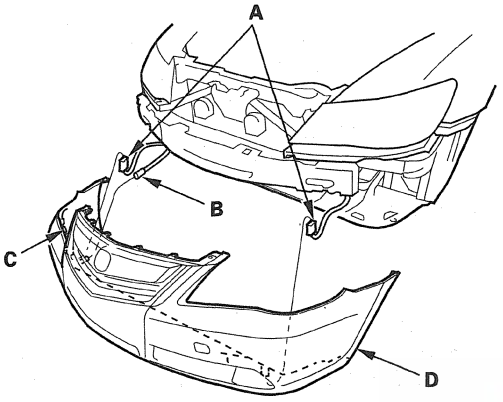

6. Release the hooks, then remove the front bumper absorber (A).

Fastener Locations

▷: **Hook, 6**

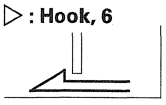

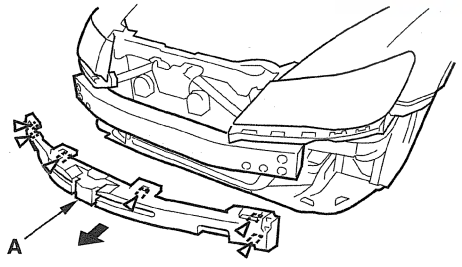

7. Install the bumper in the reverse order of removal, and note these items:

- Make sure the front fog light connectors and the outside temperature sensor connector are plugged in properly, and the headlight washer tube is connected properly.
- Make sure the front bumper engages the hooks (of both corner upper beams and side spacers) on each side securely.
- If the clips are damaged or stress-whitened, replace them with new ones.
- Push the clips and hooks into place securely.

Front Bumper Lower Face Replacement

NOTE:
- Take care not to scratch the front bumper.
- Put on gloves to protect your hands.

1. Remove the front bumper (see page 20-149).

2. Remove the bolts and the clips, then remove the front bumper lower face (A) from the front bumper (B).

Fastener Locations

▶: **Bolt, 4** ▷: **Clip, 2**

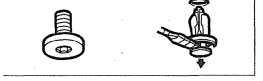

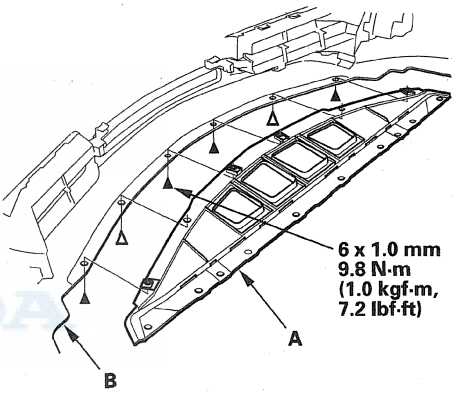

3. Install the plate in the reverse order of removal.

Front Air Spoiler Replacement

Special Tools Required
Push pin puller 07AAC-SJAA100

NOTE:
- Use the special tool to remove the clips.
- Take care not to scratch the front bumper.
- Put on gloves to protect your hands.

1. Remove the clips and the bolts from under the front bumper (A).

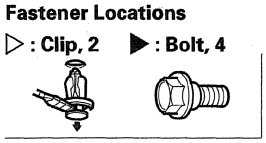

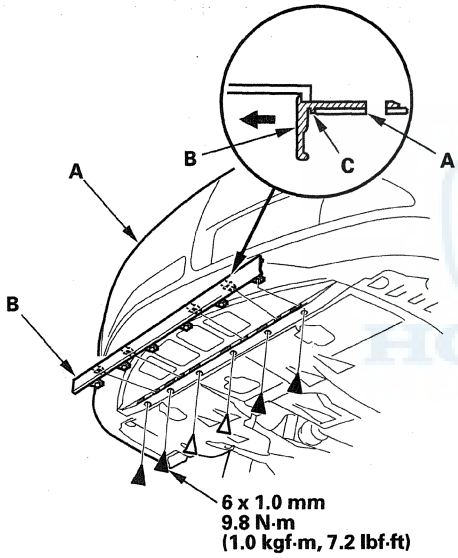

2. Pull the front air spoiler (B) out to release the hooks (C), then remove the spoiler.

3. Install the spoiler in the reverse order of removal.

   NOTE: If the clips are damaged or stress-whitened, replace them with new ones.

Front Bumper Lower Stay Replacement

NOTE:
- Take care not to scratch the front bumper.
- Put on gloves to protect your hands.

1. Remove the front bumper (see page 20-149).

2. Remove the bolts, then remove the front bumper lower stay (A).

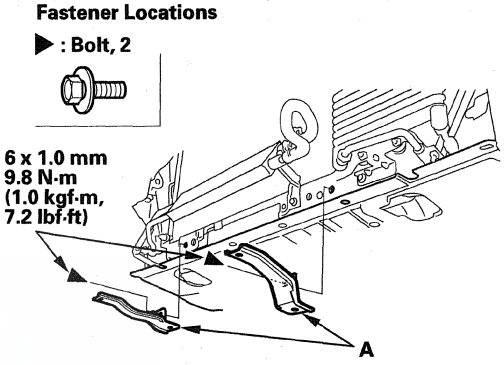

3. Install the lower stay in the reverse order of removal.

Front Bumper Duct Trim Replacement

NOTE:
- Take care not to scratch the front bumper.
- Put on gloves to protect your hands.

1. Remove the front bumper (see page 20-149).

2. Remove the front bumper duct trim (A).

   1 Release the headlight washer tube (B) from the hooks (C) on the front bumper duct trim.
   2 Remove the screw, and then remove the front bumper duct trim from the bumper (D).

Fastener Locations

▶ : Screw, 3

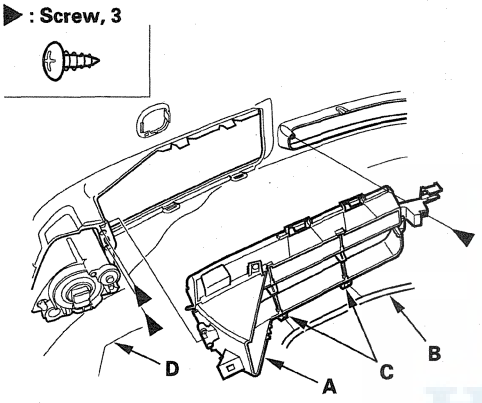

3. If necessary, remove the screws (A, B), and then remove the molding (C).

Left side

Fastener Locations

A ▶ : Screw, 3 B ▶ : Screw, 3

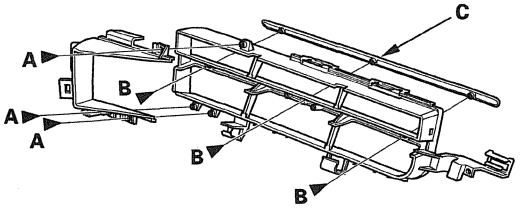

Right side

Fastener Locations

A ▶ : Screw, 4 B ▶ : Screw, 3

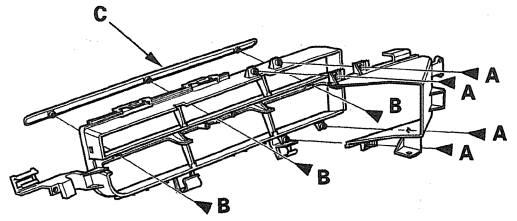

4. Install the front bumper duct trim in the reverse order of removal.

Rear Bumper Removal/Installation

Special Tools Required
- KTC trim tool set SOJATP2014 *
- Push pin puller 07AAC-SJAA100

* Available through the Acura Tool and Equipment Program; 888-424-6857

NOTE:
- Use the special tool to remove the clips.
- Have an assistant help you when removing and installing the rear bumper.
- Take care not to scratch the rear bumper and the body.
- Put on gloves to protect your hands.
- Use the appropriate tool from the KTC trim tool set to avoid damage when removing components.

1. Remove the caps (A), then remove the bolts (B).

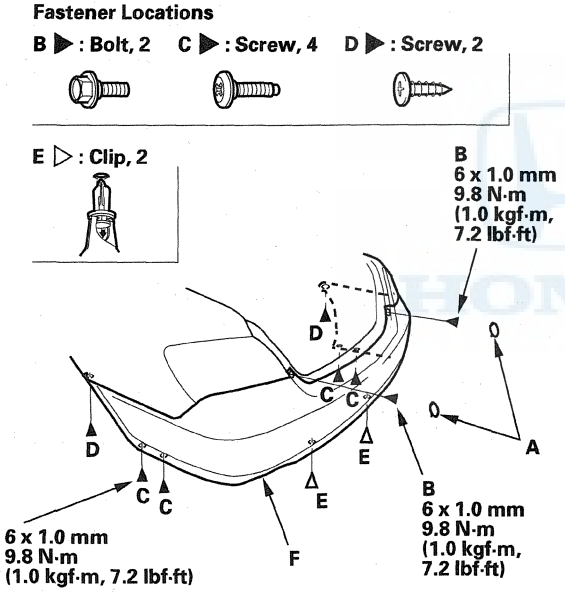

2. Remove the screws (C, D), and the clips (E) securing the rear bumper (F).

3. Pull on the rear bumper (A) at the wheel arch areas to release it from the hooks (B) on the side spacers (C).

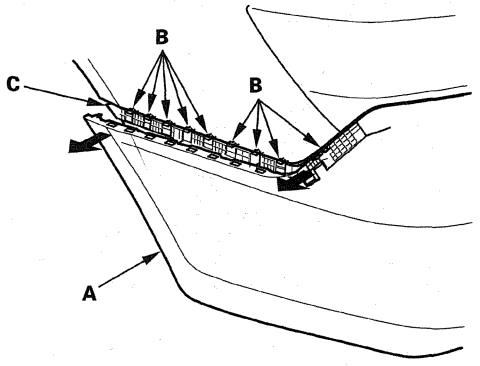

4. With the help of an assistant, pull the wheel arch portion away from the side spacer (A), while pulling the rear bumper (B) to release the bumper from the hooks (C) on the side bracket (D).

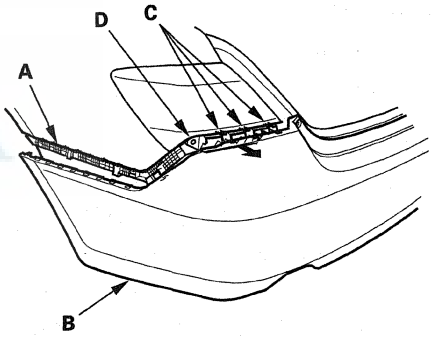

(cont'd)

Rear Bumper Removal/Installation (cont'd)

5. With the help of an assistant, pull the rear bumper (A) to release the bumper from the hooks (B) on both upper brackets (C).

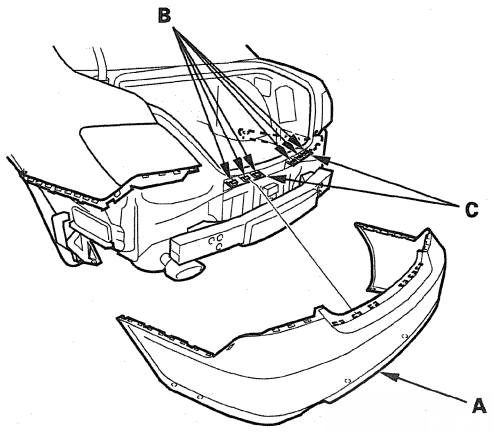

6. Release the hooks, then remove the rear bumper absorber (A).

Fastener Locations

▷ : **Hook, 4**

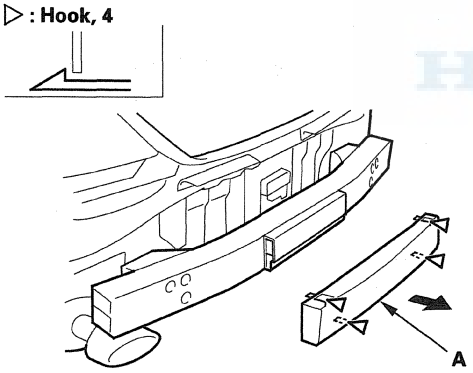

7. Install the bumper in the reverse order of removal, and note these items:

   - Make sure the rear bumper engages the hooks (of both upper bracket, side bracket, and side spacers) on each side securely.
   - If the clips are damaged or stress-whitened, replace them with new ones.
   - Push the clips and the hooks into place securely.

Rear Bumper Lower Grille Replacement

NOTE:
- Take care not to scratch the rear bumper.
- Put on gloves to protect your hands.

1. Remove the rear bumper (see page 20-153).

2. Remove the clips and detach the hooks (A), then remove the rear bumper lower grille (B).

Fastener Locations

▷ : **Clip, 2**

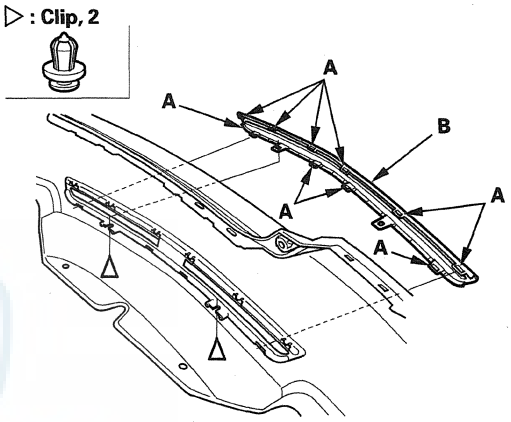

3. Install the rear bumper lower grille in the reverse order of removal, and note these items:

   - If the clips are damaged or stress-whitened, replace them with new ones.
   - Push the hooks and the clips into place securely.

Hood Adjustment

1. Remove these items:

   - Upper grille cover (see page 20-163)
   - Upper grille (see page 20-162)
   - Cowl cover upper trim (see page 20-164)
   - Hood support strut, both sides (see page 20-156)
   - Hood latch cover (see page 20-185)

2. Slightly loosen each hood hinge bolt.

3. Adjust the hood alignment (A) in this sequence.

   - Adjust the hood right and left, as well as forward and rearward, by using the elongated holes in the hood hinges (B).
   - Turn the hood edge cushions (C), in or out as necessary, to make the hood fit flush with the body at the front and side edges.

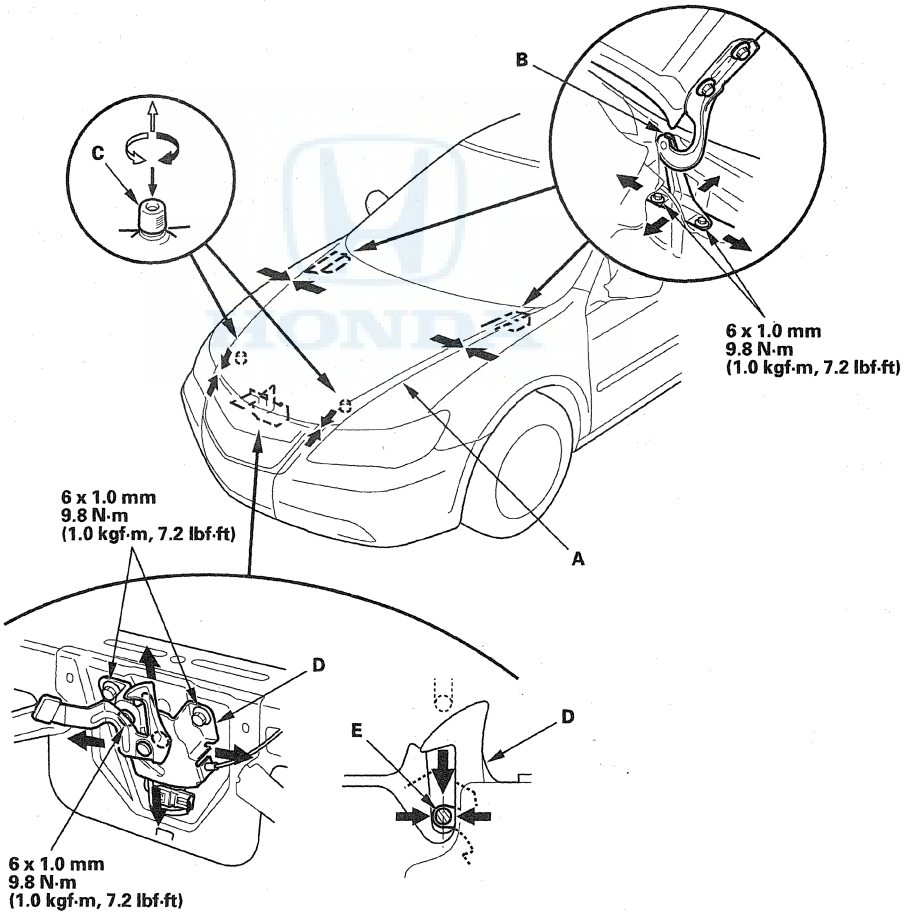

4. Adjust the hood latch (D) to obtain the proper height at the forward edge, and move the hood latch right or left until the striker (E) is centered in the hood latch.

5. Tighten the bolts to the specified torque.

(cont'd)

Hood Adjustment (cont'd)

6. Check that the hood opens properly and closes securely.

7. Apply touch-up paint to the hinge mounting bolts and around the hinges, and let the paint dry.

8. Apply multipurpose grease to the hood latch and hood hinges as indicated by the arrows.

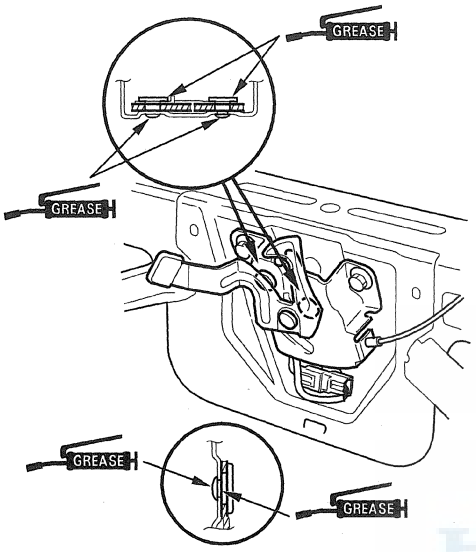

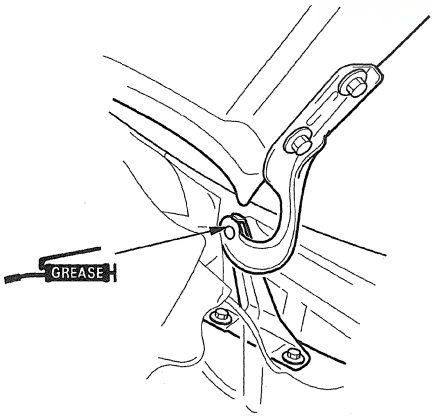

9. Reinstall all of the removed parts.

Hood Support Strut Replacement

NOTE:
- Have an assistant help you when removing and installing the support strut.
- Take care not to scratch the body and the hood.

1. Remove the pivot bolt (A) from the body.

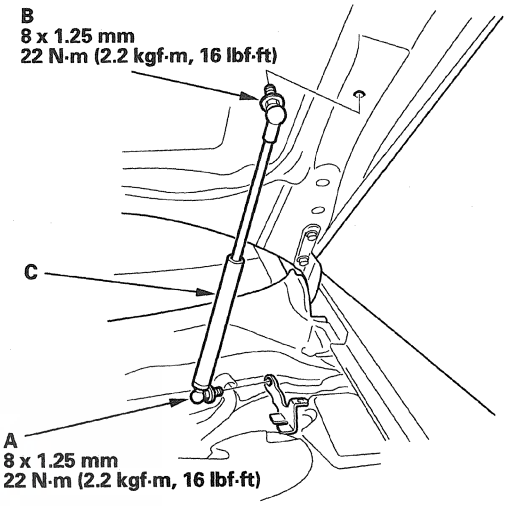

2. Remove the pivot bolt (B) from the hood, then remove the support strut (C).

3. Install the support strut in the reverse order of removal.

Hood Seal Replacement

1. Using a clip remover, detach the clips, then remove the hood seal (A). Take care not to scratch the hood.

Fastener Locations

▷ : **Clip, 9**

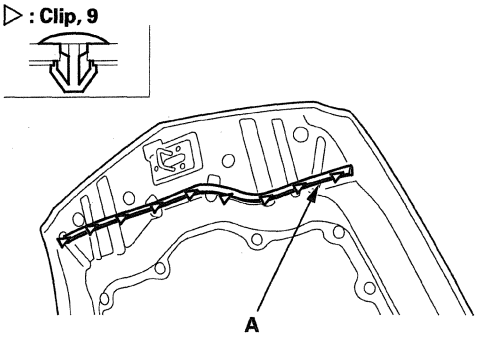

2. Install the seals in the reverse order of removal, and note these items:

- If the clips are damaged or stress-whitened, replace them with new ones.
- Push the clips into place securely.

Hood Insulator Replacement

1. Using a clip remover, detach the clips. Release the hooks (A), then remove the hood insulator (B). Take care not to scratch the hood.

Fastener Locations

▷ : **Clip, 9**

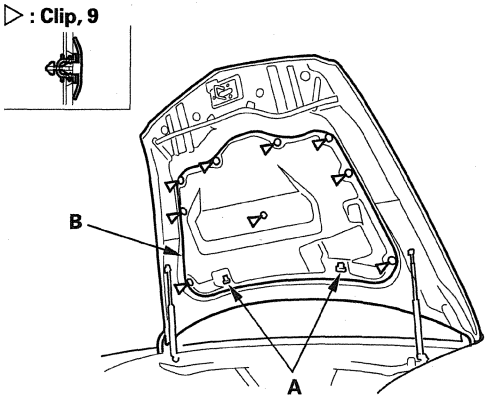

2. Install the insulator in the reverse order of removal, and note these items:

- If the clips are damaged or stress-whitened, replace them with new ones.
- Push the clips into place securely.

HONDA

Trunk Lid Adjustment

1. Remove these items:
   - Trunk side trim panel, both sides (see page 20-83)
   - Rear shelf (see page 20-80)
   - Trunk lid support strut, both sides (see page 20-159)

2. Slightly loosen the trunk hinge bolts (A).

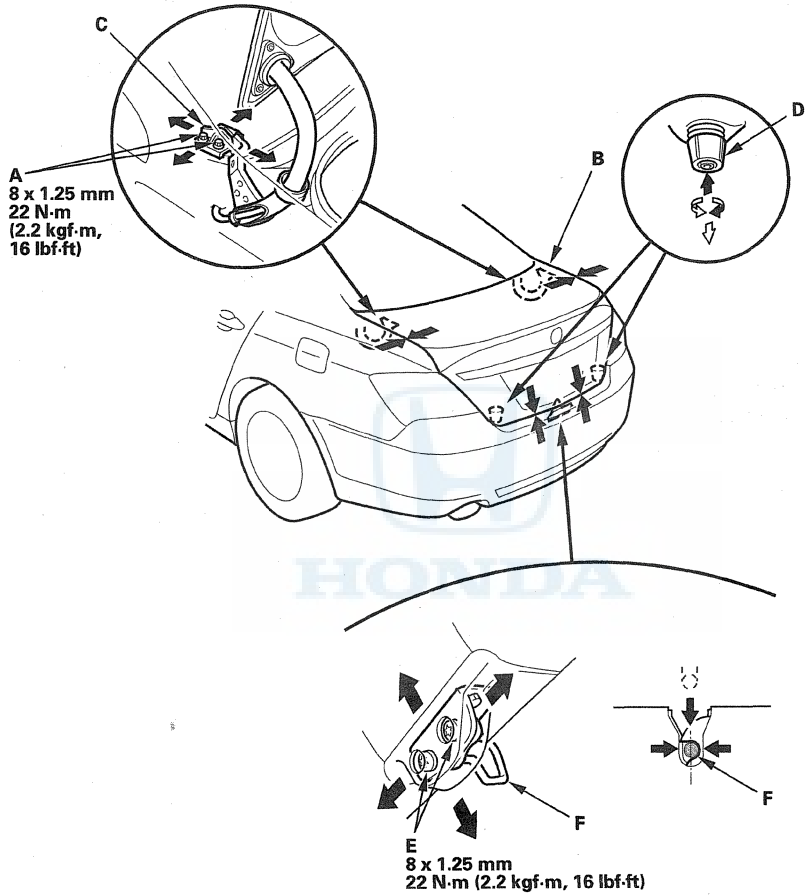

3. Adjust the trunk lid (B) alignment in the following sequence:
   - Adjust the trunk lid hinges (C) right and left, as well as forward and rearward, by using the elongated holes. Take care not to hit the rear window when loosening the bolts.
   - Turn the trunk lid edge cushions (D), in or out as necessary, to make the trunk lid fit flush with the body at the rear and side edges.
   - Using a TORX T30 bit, loosen the striker bolts (E), and adjust the fit between the trunk lid and the trunk lid opening by moving the striker (F).

4. Tighten the bolts to the specified torque.

5. Make sure the trunk lid opens properly and locks securely.

6. Reinstall all remaining removed parts.

Trunk Lid Support Strut Replacement

NOTE:
- Have an assistant help you when removing and installing the support strut.
- Take care not to scratch the body and trunk lid.

1. Remove these items (see page 20-83):
   - Trunk floor lid
   - Trunk rear trim panel
   - Trunk front trim panel
   - Trunk side trim panel, both sides
   - Trunk upper trim panel
2. Remove the bolts from the body.

Fastener Locations
▶ : Bolt, 2

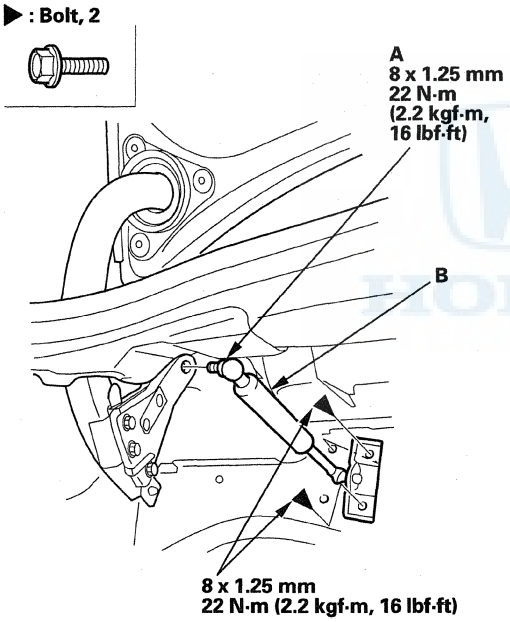

3. Remove the pivot bolt (A) from the trunk lid, then remove the support strut (B).
4. Install the support strut in the reverse order of removal.

Trunk Lid Striker Replacement

NOTE: Take care not to scratch the trunk lid.

1. Remove the bolts (A), from the trunk lid.

Fastener Locations
A ▶ : Bolt, 2 B ▶ : Screw, 1

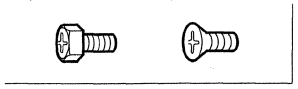

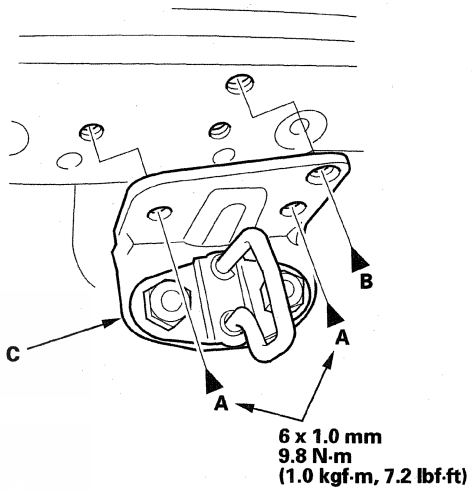

2. Remove the screw (B), then remove the trunk lid striker (C).
3. Install the trunk lid striker in the reverse order of removal.

Trunk Lid Weatherstrip Replacement

1. Remove the trunk lid weatherstrip (A) by pulling it off.

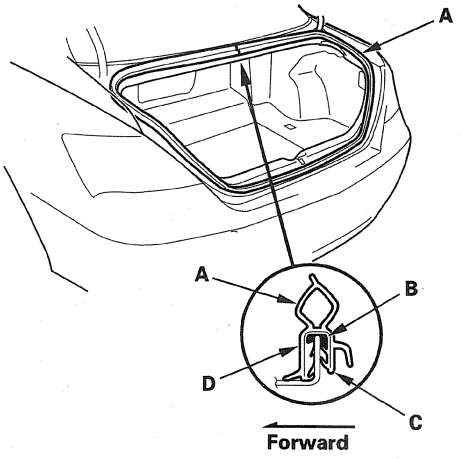

2. Apply clear weatherstrip sealant (B) into the channel of the trunk lid weatherstrip all the way around.

3. Locate the painted alignment mark (C or D) on the trunk lid weatherstrip. Align the painted mark with the center of the trunk lid opening, and install the trunk lid weatherstrip all the way around in the direction shown. Make sure there are no wrinkles in the weatherstrip.

4. Check for water leaks (see step 8 on page 20-34).

Trunk Lid Dynamic Damper Replacement

1. Remove the bolts, then remove the trunk lid dynamic damper (A). Take care not to scratch the trunk lid.

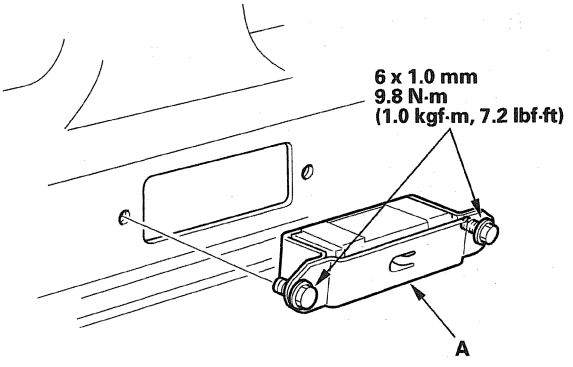

2. Install the damper in the reverse order of removal.

Trunk Lid Hinge Arm Replacement

NOTE:
- Have an assistant help you when removing and installing the trunk lid hinge arms.
- Take care not to scratch the body and the trunk lid.
- Put on gloves to protect your hands.

1. Remove these items:
   - Trunk side trim panel (see page 20-83)
   - Trunk lid trim panel (see page 20-85)

2. Disconnect the trunk lid harness connector (A), then detach the clip (B). Using a TORX T30 bit, remove the bolts, then remove the trunk lid (C), and pull the trunk lid harness out through the trunk lid.

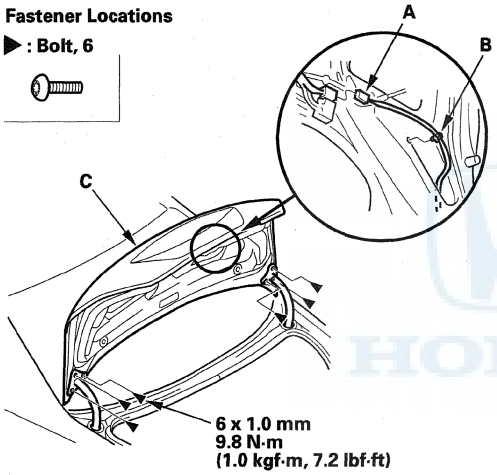

3. Detach the harness clip (A) from the right trunk hinge arm. From both sides, remove the bolts, and release the hook (B), then remove the trunk hinge arm (C) from the trunk lid hinge (D).

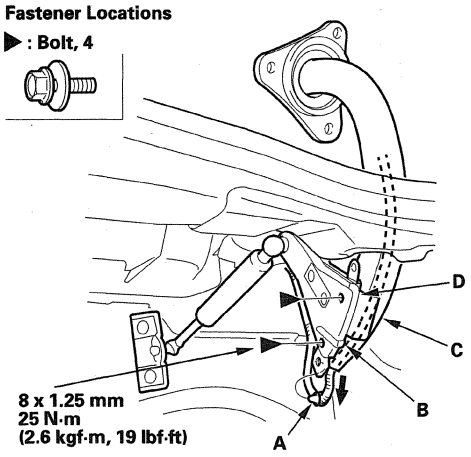

4. Release the double-sided adhesive tapes (A), and using a trim tool, detach the pins (B) of the trunk lid shield (C), then remove the trunk lid shield and the grommet (D).

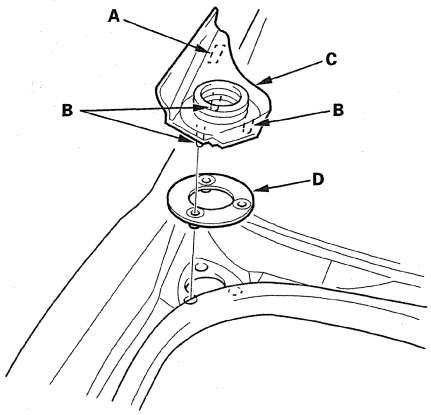

5. Install the hinge in the reverse order of removal, and note these items:
   - Scrape off the remaining double-sided adhesive tape from the shield, then clean the shield surface with a shop towel dampened with isopropyl alcohol.
   - Apply a new adhesive tape (A) to the trunk lid shield (B).
   - Before installing the trunk lid, replace the trunk lid insulation washers (C) and the trunk lid mounting bolts with new ones.
   - Push the adhesive portions into place securely.
   - Make sure the trunk lid harness connector is plugged in properly.

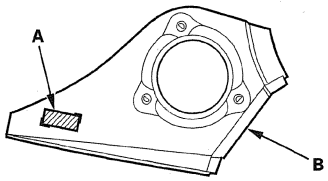

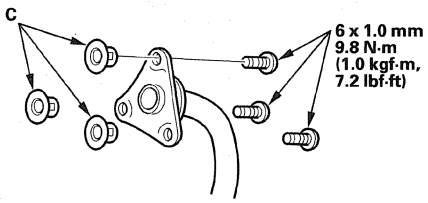

Upper Grille Replacement

Special Tools Required
KTC trim tool set SOJATP2014 *
* Available through the Acura Tool and Equipment Program; 888-424-6857

NOTE:
- Use the appropriate tool from the KTC trim tool set to avoid damage when removing components.
- Take care not to scratch the bumper and the grille.

1. Remove the front bumper (see page 20-149).

2. Detach the clips, then remove the upper grille (A).

Fastener Locations
▷ : Clip, 4

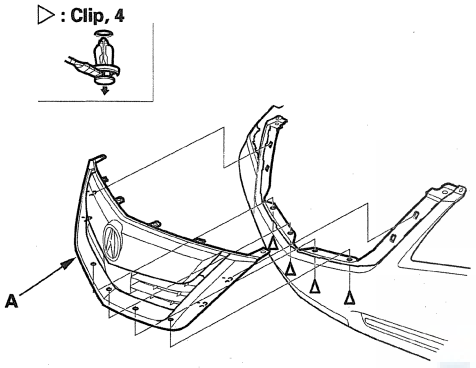

3. If necessary, remove the screws, then remove the emblem base (A) and the grille molding (B) from the upper grille.

Fastener Locations
▶ : Screw, 21

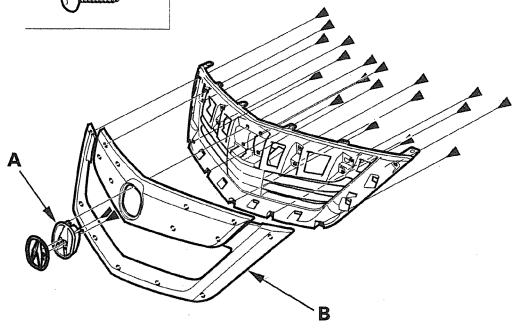

4. Install the grille in the reverse order of removal, and note these items:

   - If the clips are damaged or stress-whitened, replace them with new ones.
   - Push the clips into place securely.

Upper Fender Trim Replacement

Special Tools Required
KTC trim tool set SOJATP2014 *
* Available through the Acura Tool and Equipment Program; 888-424-6857

NOTE:
- Use the appropriate tool from the KTC trim tool set to avoid damage when removing components.
- Take care not to scratch the grille and the body.

1. Disconnect the washer reservoir tubes (A). Detach the clips, then remove the right upper fender trim (B).

Fastener Locations
▷ : Clip, 6

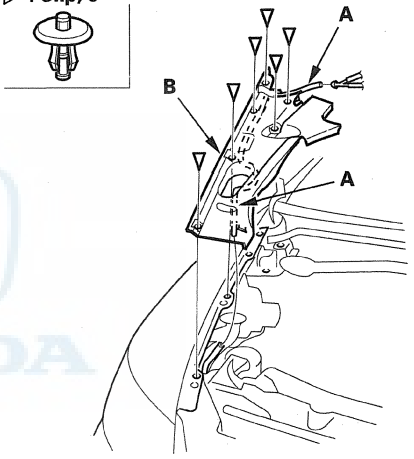

2. Release the hooks (A, B) and remove the clips, then remove the battery trim (C) from the upper grille cover (D).

Fastener Locations
▷ : Clip, 2

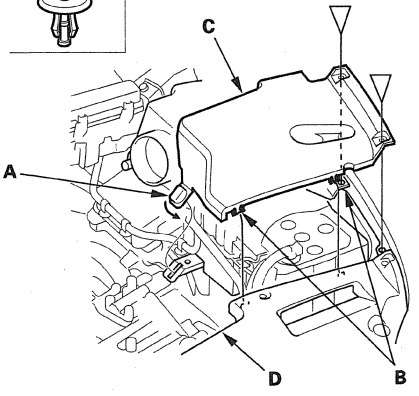

3. Detach the clips, and release the hooks (A), then remove the left upper fender trim (B) and remove the left upper trim (C).

Fastener Locations

▷ : **Clip, 4**

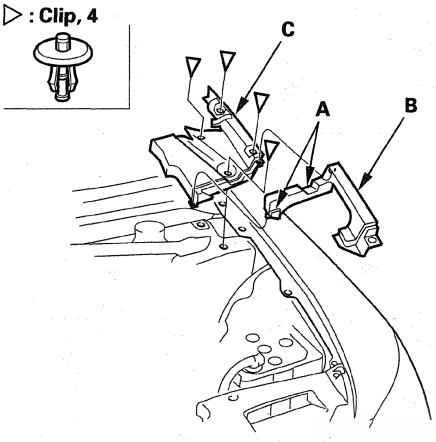

4. Install the upper fender trim in the reverse order of removal, and note these items:

- If the clips are damaged or stress-whitened, replace them with new ones.
- Push the clips into place securely.
- Make sure the windshield washer tubes are connected properly.
- Make sure the rear end of the upper fender trim (A) is installed under the body (B) properly.

NOTE: Right side is shown; left side is similar

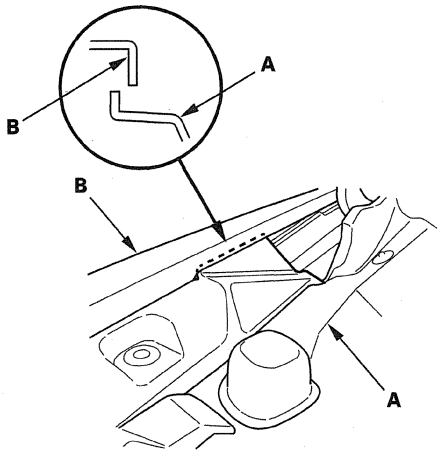

Upper Grille Cover Replacement

Special Tools Required

- KTC trim tool set SOJATP2014 *
- Push pin puller 07AAC-SJAA100

* Available through the Acura Tool and Equipment Program; 888-424-6857

NOTE:

- Use the special tool to remove the clips.
- Use the appropriate tool from the KTC trim tool set to avoid damage when removing components.
- Take care not to scratch the front bulkhead and the body.

1. Pull up the front portion of the upper fender trim, from each side (see page 20-162).

2. Detach the clips (A, B). Using a trim tool, detach the clip (C), then remove the upper grille cover (D).

Fastener Locations

A ▷ : **Clip, 2** B ▷ : **Clip, 6**

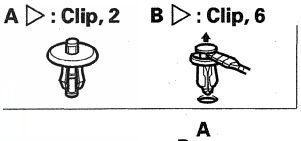

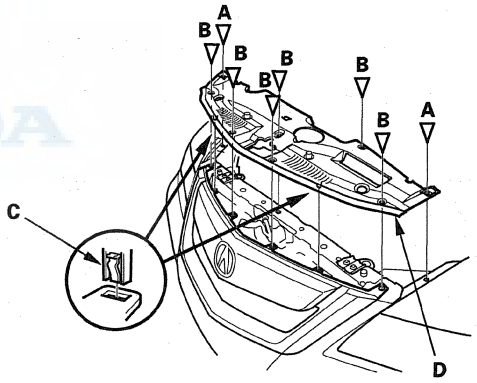

3. Install the upper grille cover in the reverse order of removal, and note these items:

- If the clips are damaged or stress-whitened, replace them with new ones.
- Push the clips into place securely.

Cowl Cover Replacement

NOTE:
- Take care not to scratch the cowl cover and the body.
- Use a clip remover to remove the hood rear seal clips.

1. Detach the clips (A, B), then remove the cowl cover upper trim (C).

Fastener Locations
A ▷ : Clip, 7 B ▷ : Clip, 3

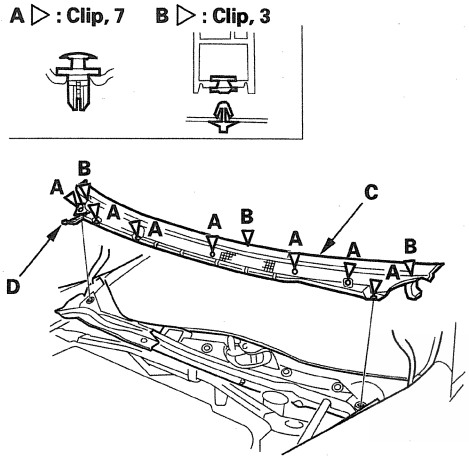

2. Disconnect the windshield washer tubes (D).

3. Remove the windshield wiper arms (see page 22-386).

4. Remove the rear hood seal (A), then detach the clips (B, C, D) by carefully pulling the passenger's cowl cover (E) upward, and release the hook (F) on the passenger's cowl cover from the driver's cowl cover (G), then remove the cover by releasing the hooks (H).

Fastener Locations
B ▷ : Clip, 2 C ▷ : Clip, 3 D ▷ : Clip, 1

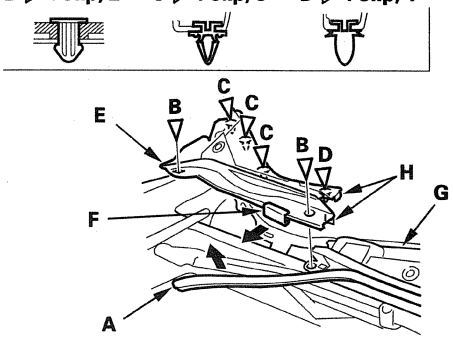

5. Remove the rear hood seal (A), then detach the clips (B, C, D) by carefully pulling the driver's cowl cover (E) upward, then remove the cover by releasing the hooks (F).

Fastener Locations
B ▷ : Clip, 2 C ▷ : Clip, 5 D ▷ : Clip, 1

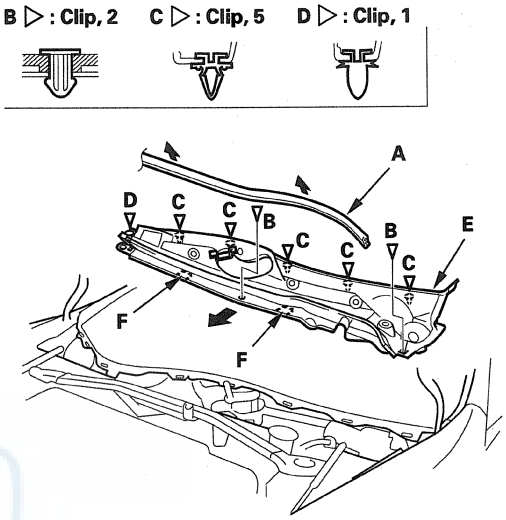

6. Install the covers in the reverse order of removal, and note these items:

- If the clips are damaged or stress-whitened, replace them with new ones.
- Make sure the washer tubes are connected securely.
- Push the clips into place securely.

Windshield Side Trim Replacement

Special Tools Required
KTC trim tool set SOJATP2014 *
* Available through the Acura Tool and Equipment Program; 888-424-6857

NOTE:
- Put on gloves to protect your hands.
- Take care not to damage the windshield.
- Do not use any metal tools to remove the windshield side trim, or you may chip the edge of the windshield and crack the windshield.
- Use the appropriate tool from the KTC trim tool set to avoid damage when removing components.
- Take care not to bend the windshield side trim.

Trim Replacement

1. Remove the cowl cover upper trim (see page 20-164).

2. Remove the windshield side trim (A).

   1 Carefully insert a trim tool (B) under the trim next to the lower clip (C).
   2 While pushing the clip portion of the trim to the pillar side by hand, gently pry up the trim to release the trim from the retainers (D).
   3 Gradually work your way up to release each of the upper clips (E, F, G).

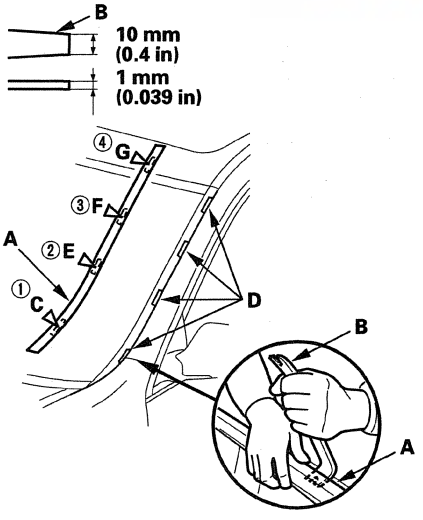

3. Install the trim in the reverse order of removal, and note these items:

   - Make sure the trim is installed securely.
   - Replace any damaged retainer.

(cont'd)

Windshield Side Trim Replacement (cont'd)

Retainer Replacement

1. Gradually separate the adhesive tape (A) under the retainers (B) while heating them with a heat gun to about 212—248 °F (100—120 °C).

   NOTE:
   - Do not overheat the painted surface around the retainers.
   - To keep the exterior plastic parts near the A-pillar from being overheated by a heat gun, wrap them with an aluminum foil.

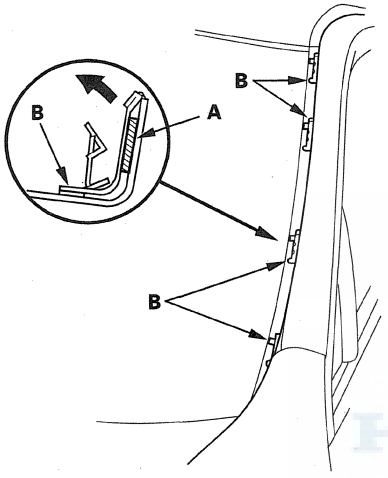

2. Using isopropyl alcohol on a shop towel, clean the body bonding surface. After cleaning, keep oil, grease, and water from getting on the surface.

3. Install the retainers (A).

   1. Peel the adhesive backing away from the retainers.
   2. Line up the retainers with the alignment marks (B) on the body, and attach them with adhesive tape (C).
   3. Apply epoxy two-part adhesive (D) around the edge of the retainers as shown.

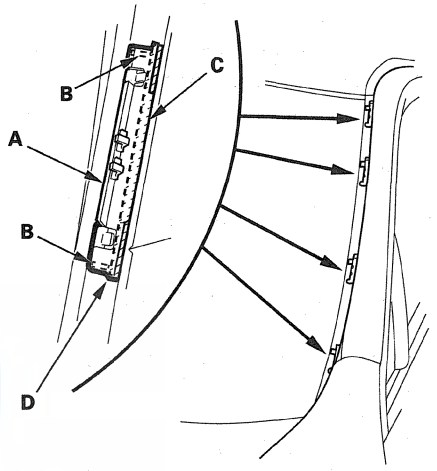

Roof Molding Replacement

Special Tools Required
KTC trim tool set SOJATP2014 *
* Available through the Acura Tool and Equipment Program; 888-424-6857

NOTE:
- Use the appropriate tool from the KTC trim tool set to avoid damage when removing components.
- Take care not to scratch the body.

1. Apply protective tape (A) to the body. Using a trim tool, pry up on the roof molding (B).

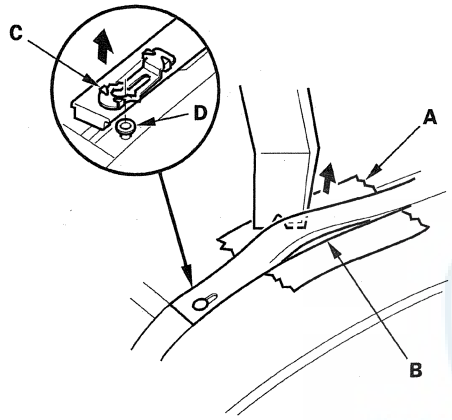

2. Pull up and slide the roof molding to release the front bracket (C) from the pin (D).

3. Pull up the front portion of the roof molding (A).

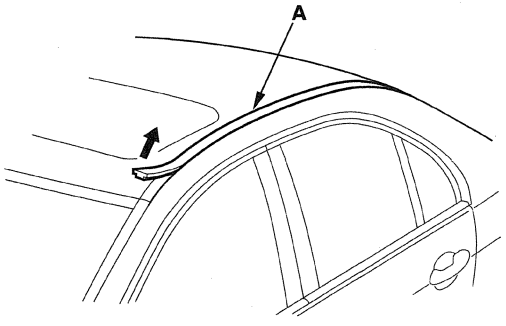

4. Pull up, and release the rear bracket (A) from the pin (B), then remove the roof molding (C).

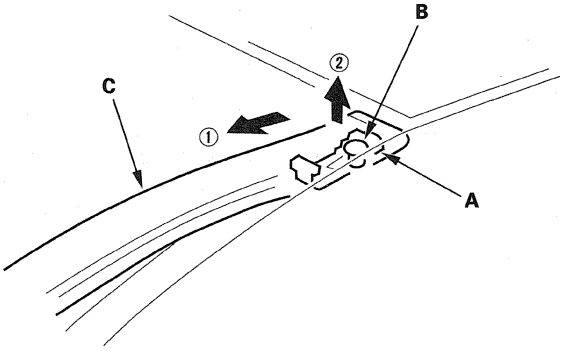

5. Install the molding in the reverse order of removal, and note these items:

- Take care not to damage the windshield molding.
- Make sure the roof molding is installed securely.

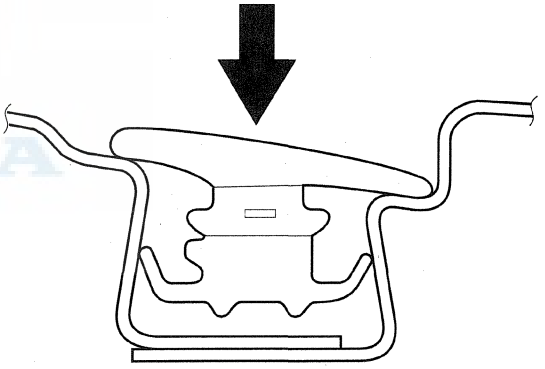

Roof Drip Molding Replacement

Special Tools Required
KTC trim tool set SOJATP2014 *
* Available through the Acura Tool and Equipment Program; 888-424-6857

NOTE:
- Put on gloves to protect your hands.
- Use the appropriate tool from the KTC trim tool set to avoid damage when removing components.
- Take care not to scratch the trim and the panels.
- After removing the roof drip molding, be sure to replace it with a new one.

1. Detach the hooks (A), then remove the rear pillar trim cover (B).

Fastener Locations

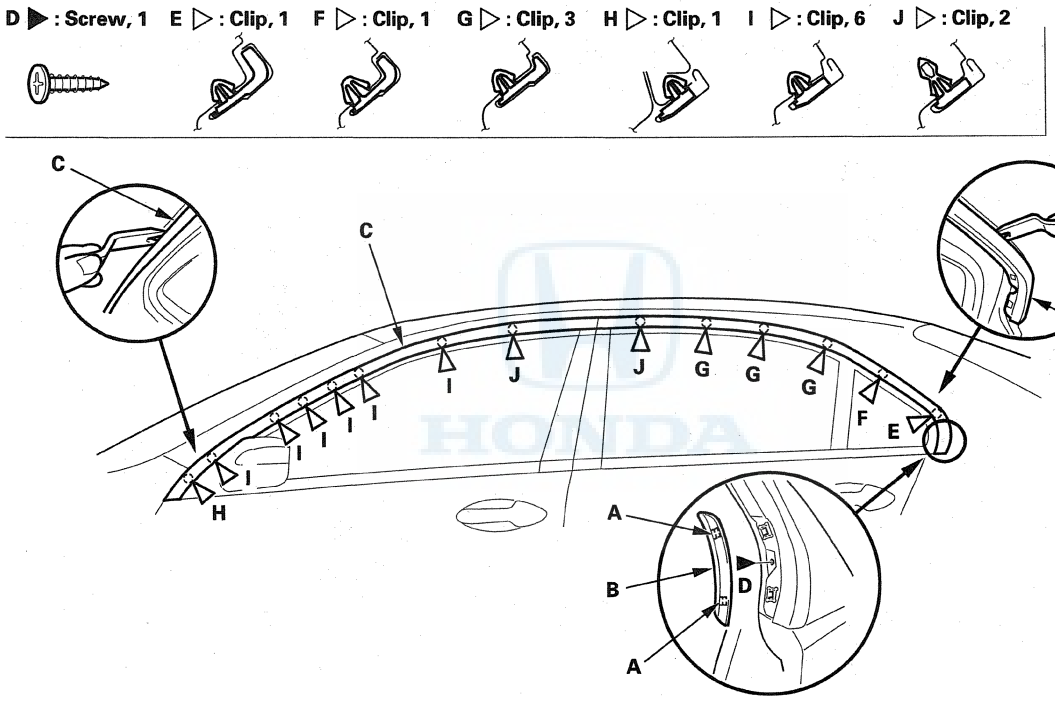

2. Remove the roof drip molding (C).
   1. Remove the screw (D).
   2. Detach the clips (E, F, G, H, I, J) in alphabetical order.
3. Remove the remaining clips from the body, and attach them to the molding.
4. Align the molding with the body, and starting with the middle clips (J), snap the clips into place in reverse alphabetical order.
5. Reinstall the rear pillar trim cover.

Door Molding Replacement

Special Tools Required
KTC trim tool set SOJATP2014 *
* Available through the Acura Tool and Equipment Program; 888-424-6857

NOTE:
- Use the appropriate tool from the KTC trim tool set to avoid damage when removing components.
- Be careful not to pry too far or you may bend the molding.
- Put on gloves to protect your hands.

1. Remove these items:

   - Front door panel (see page 20-9) and plastic cover (see step 3 on page 20-12)
   - Rear door panel (see page 20-21) and plastic cover (see step 2 on page 20-27)

2. Release the clips, and gently pry the front door molding (A) or rear door molding (B) away from the door while separating the adhesive tape (C, D, E).

   Adhesive tape (C, D, E): Thickness 1.2 mm (0.047 in)

Fastener Locations
▷ : **Clip, 10**

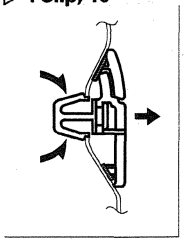

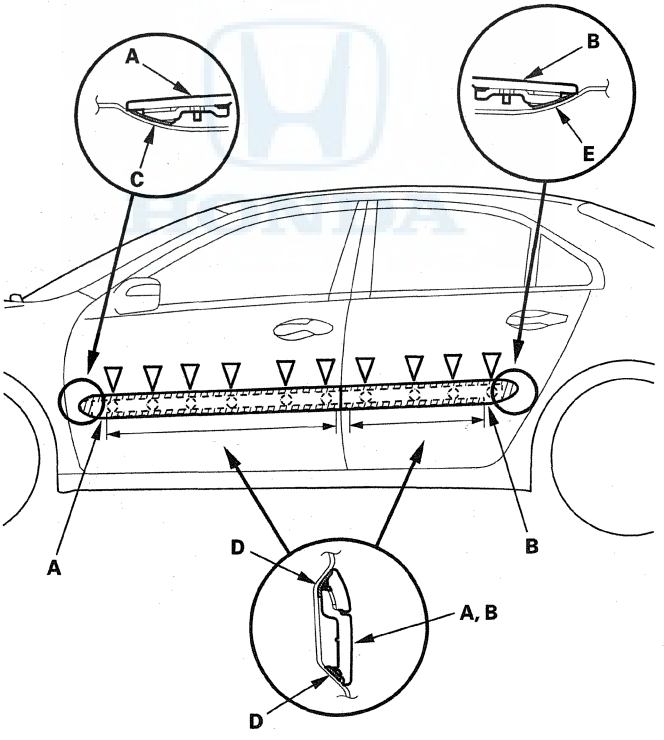

3. Install the moldings in the reverse order of removal.

   NOTE: If the clips are damaged or stress-whitened, replace them with new ones.

Side Sill Panel Replacement

Special Tools Required
Push pin puller 07AAC-SJAA100

NOTE: Use the special tool to remove the clips.

1. Remove the side sill panel (A).
   1. On the front of the rear wheel arch, remove the clips (B).
   2. Remove the expansion clips (C).
   3. Slide the side sill panel rearward and remove it. The side clips (D) will stay in the body.
   4. Remove the side clips (D) by turning the clip 45 ° from the body.
   5. On the back of the front wheel arch, remove two screws (E) and clip (B) and on a Canada model, remove the front splash guard (F).
   6. Turn the side sill inner trim (G) 45 ° to release the side clip (D), then remove the trim.
   7. If necessary, remove the screws (H), then remove the moldings (I).

Fastener Locations

B ▷: Clip
Canada models, 3
USA models, 2
C ▷: Clip, 4 **D ▷: Clip, 11** **E ▶: Screw, 2** **H ▶: Screw, 10**

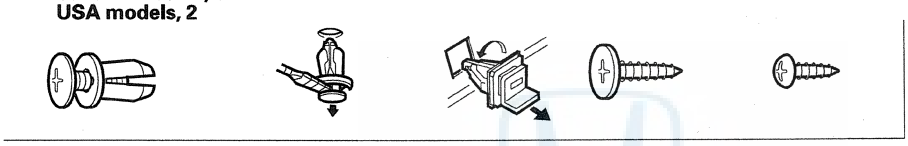

Canada models **USA models**

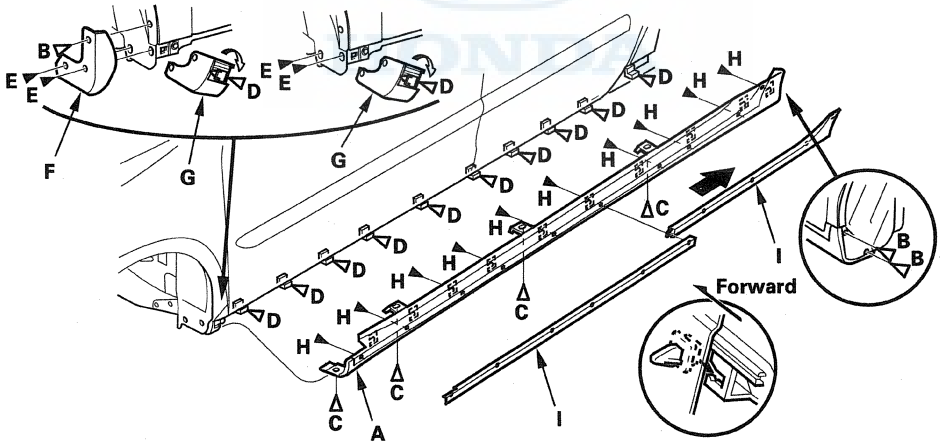

2. If the clips are damaged or stress-whitened, replace them with new ones.

3. Install the side clips (A) on the side sill panel (B).

Fastener Locations

A ▷ : Clip, 11 D ▷ : Clip, 4 F ▶ : Screw, 2 G ▷ : Clip
Canada models, 3
USA models, 2

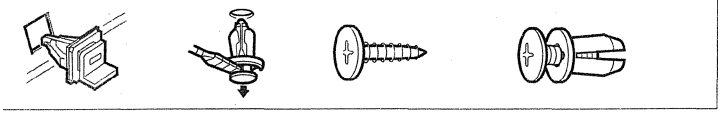

Canada models

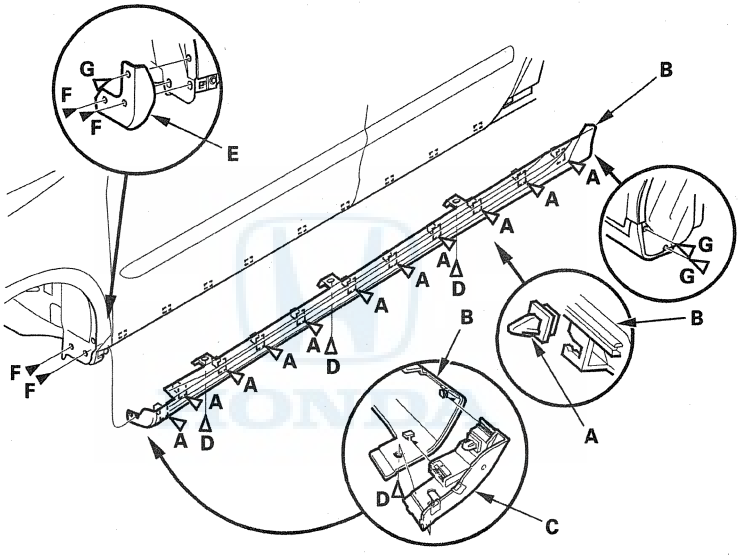

4. Install the side sill inner trim (C) on the side sill panel, and install the clip (D).

5. Hold the panel up, and fit all the side clips into the holes in the body, then push on the panel until the clips snap into place.

6. Install all the expansion clips (D).

7. Install the front splash guard (E) (Canada models), the screws (F), and the clips (G).

Side Sill Protection Tape Replacement

1. Slowly peel off the old side sill protection tape.
2. Using isopropyl alcohol on a shop towel, clean the side sill panel bonding surface. After cleaning, keep oil, grease, and water from getting on the surface.
3. Peel the adhesive backing from the side sill protection tape.
4. Align the side sill protection tape (A) with the edge of the side sill panel (B), then press if into place.

Unit: mm (in)

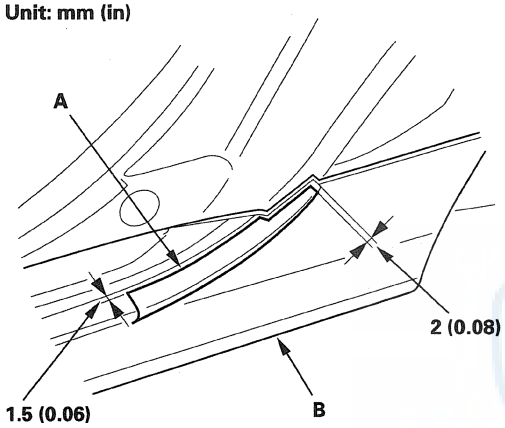

Rear License Trim Replacement

NOTE:
- Put on gloves to protect your hands.
- Take care not to scratch the trunk rid.

1. Remove the trunk lid trim (see page 20-85).

2. Remove the screws from the rear license trim (A).

Fastener Locations

▶ : Screw, 2

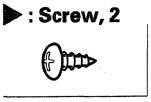

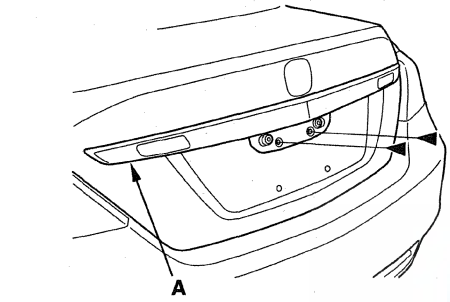

3. From inside the trunk lid, remove the bolts and the nuts securing the rear license trim and both back-up lights (A).

Fastener Locations

▶ : Bolt, 2 **● : Nut, 2**

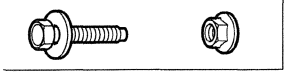

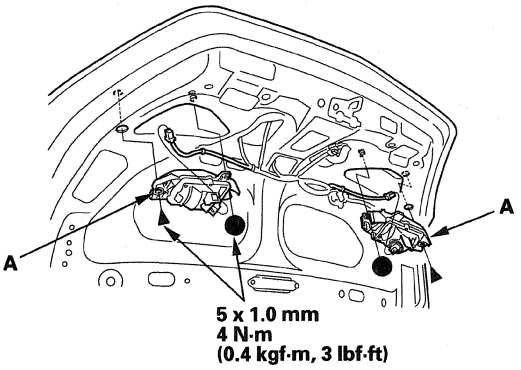

4. Remove the back-up lights from both sides.

5. Gently close the trunk lid, and pull the rear license trim (A) out to detach the clip, then remove the trim. Take care not to scratch the trunk lid.

Fastener Locations

▷ : Clip, 3

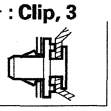

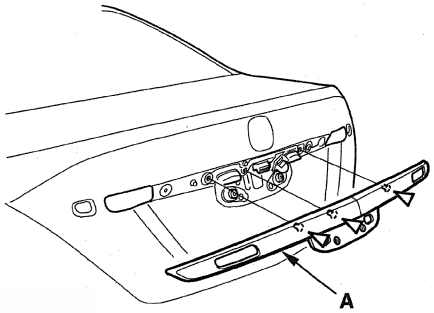

6. Install the trim in the reverse order of removal, and note these items:

- If the clips are damaged or stress-whitened, replace them with new ones.
- Push the clips into place securely.

HONDA

Taillight Trim Replacement

Special Tools Required
KTC trim tool set SOJATP2014 *
* Available through the Acura Tool and Equipment Program; 888-424-6857

NOTE:
- Use the appropriate tool from the KTC trim tool set to avoid damage when removing components.
- Take care not to scratch the body.

1. Detach the clips, then remove the taillight trim (A).

Fastener Locations
▷ : **Clip, 2**

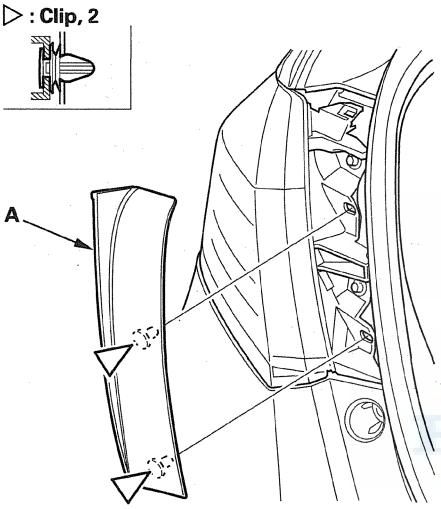

2. Install the trim in the reverse order of removal, and note these items:

   - If the clips are damaged or stress-whitened, replace them with new ones.
   - Push the clips and the hooks into place securely.

Trunk Opening Panel Replacement

Special Tools Required
KTC trim tool set SOJATP2014 *
* Available through the Acura Tool and Equipment Program; 888-424-6857

NOTE:
- Use the appropriate tool from the KTC trim tool set to avoid damage when removing components.
- Take care not to scratch the body.

1. Remove the taillight trim.

2. Separate the double-sided adhesive tape (A), and use a trim tool to detach the pins (B) of the trunk opening panel (C).

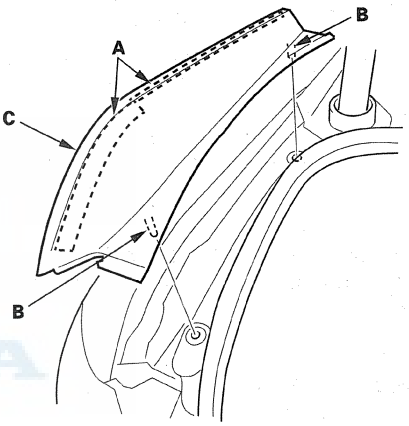

3. Install the trunk opening panel in the reverse order of removal, and note these items:

   - Scrape off the remaining double-sided adhesive tape from the cover and the body, then clean the cover and the body surface with a shop towel dampened with isopropyl alcohol.
   - Apply new adhesive tape (A) to the trunk opening panel (B).
   - Push the adhesive portions and the pins into place securely.

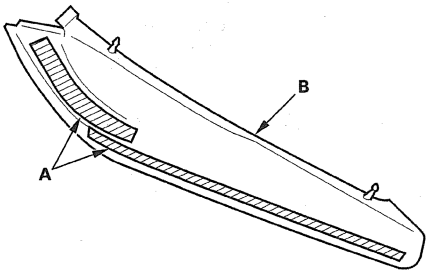

Emblem/Sticker Replacement

NOTE: When removing the emblems/stickers, take care not to scratch the body.

1. Using isopropyl alcohol on a shop towel, clean the body bonding surface. After cleaning, keep oil, grease, and water from getting on the surface.

2. Apply the emblem/sticker where shown. When installing the ULEV sticker on the inside surface of the left rear door quarter glass, align the sticker with the edge of the glass mark and black ceramic as shown, then press the sticker into place, and remove the application tape.

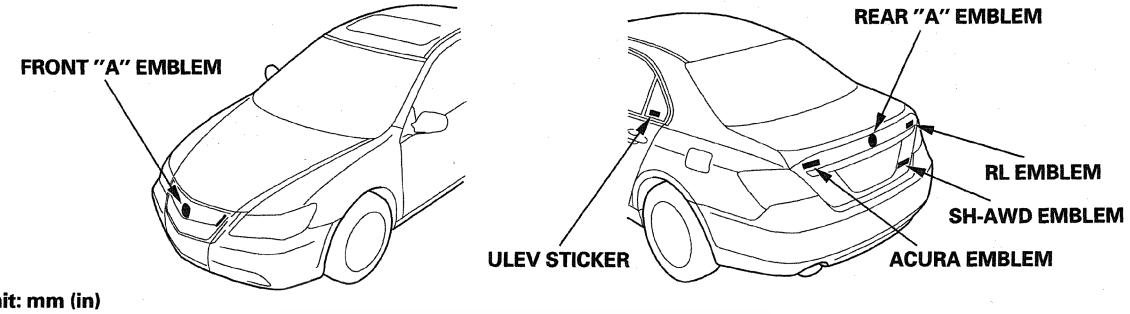

Unit: mm (in)

Adhesive tape: Thickness 0.8 mm (0.03 in)

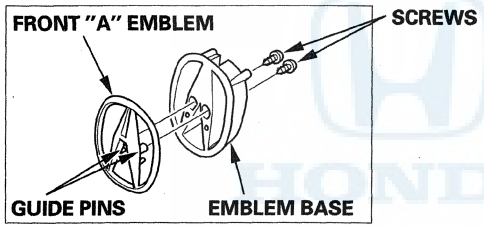

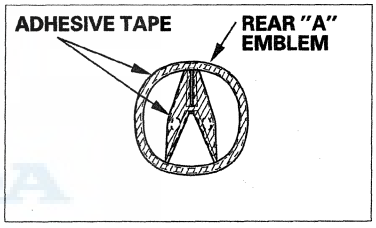

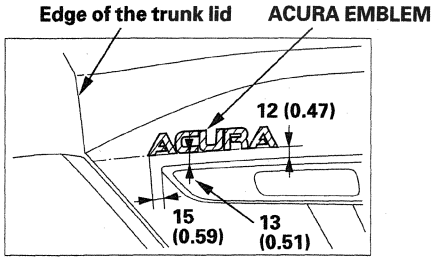

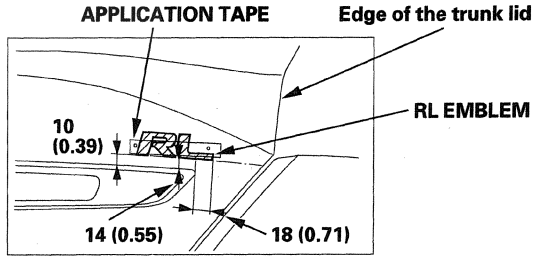

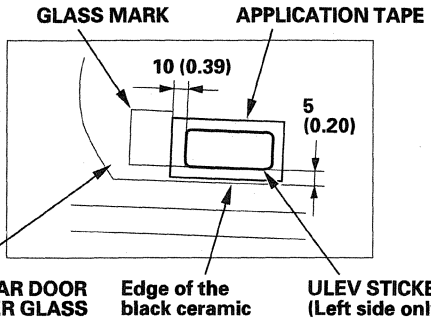

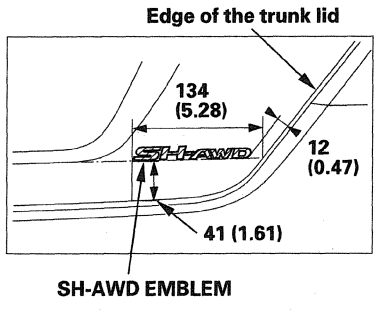

Front Inner Fender Replacement

Special Tools Required
Push pin puller 07AAC-SJAA100

NOTE:
- Use the special tool to remove the clips.
- Take care not to scratch the body.

1. Remove the front inner fender (A).

   1 Remove the screws (B) and clips (C) from the rear of the front wheel arch, then remove the splash guard (D) (Canada models).
   2 From under the front bumper (E), remove the bolts (F) securing the front bumper, splash shield (G), and the front inner fender. Remove the clip (H) securing the front bumper and the front inner fender.
   3 From the wheel arch, remove the clips (I, J) and screw (K) securing the front inner fender (and splash shield) to the body.
   4 Release the hook (L) of the splash shield, then remove the front inner fender.

Fastener Locations

B ▶: Screw, 2 C ▷: Clip, 2 F ▶: Bolt, 2 H, J ▷: Clip, 2 I ▷: Clip, 9 K ▶: Screw, 1

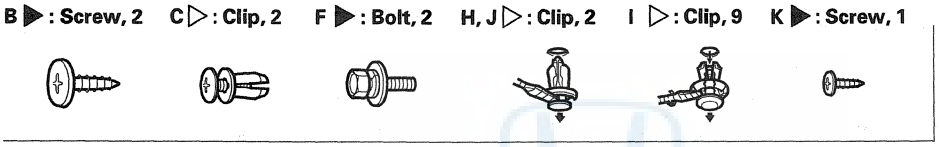

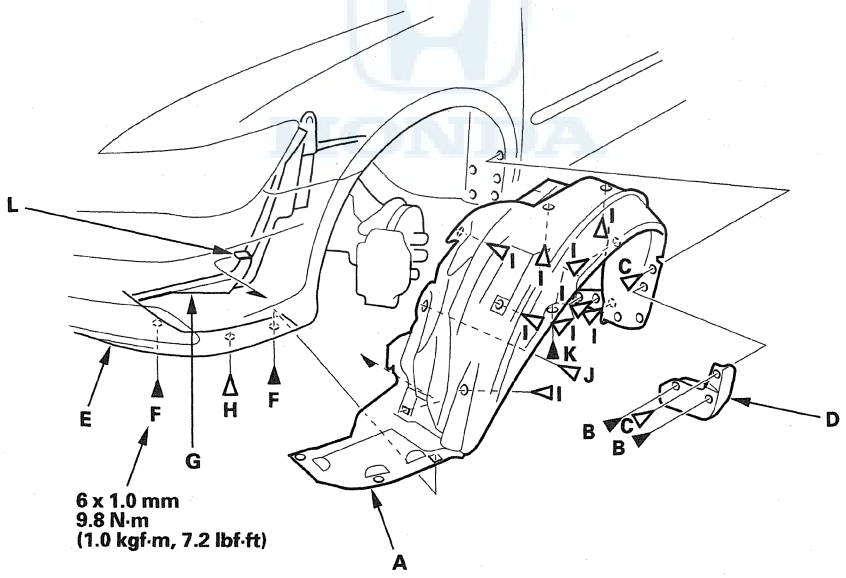

2. Install the inner fender in the reverse order of removal, and note these items:

   - If the clips are damaged or stress-whitened, replace them with new ones.
   - Push the clips into place securely.

Splash Shield Replacement

Special Tools Required
Push pin puller 07AAC-SJAA100

NOTE:
- Use the special tool to remove the clips.
- Take care not to scratch the body.

1. Remove the splash shield (A).

   -1 Remove the clips (B, C) that secure the front inner fender (D) and the splash shield to the body.
   -2 From under the front bumper (E), remove the bolts (F) (with engine undercover).
   -3 From under the body, remove the bolts (G) and the clips (H, I).
   -4 Release the hooks (J) of the splash shield, then pull the splash shield out.

Fastener Locations

B ▷: Clip, 2 C, I ▷: Clip, 4 F, G ▶: Bolt, 5 H ▷: Clip, 3

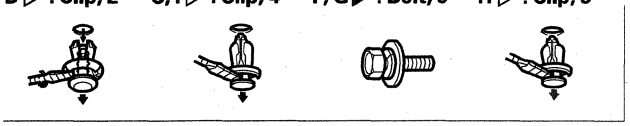

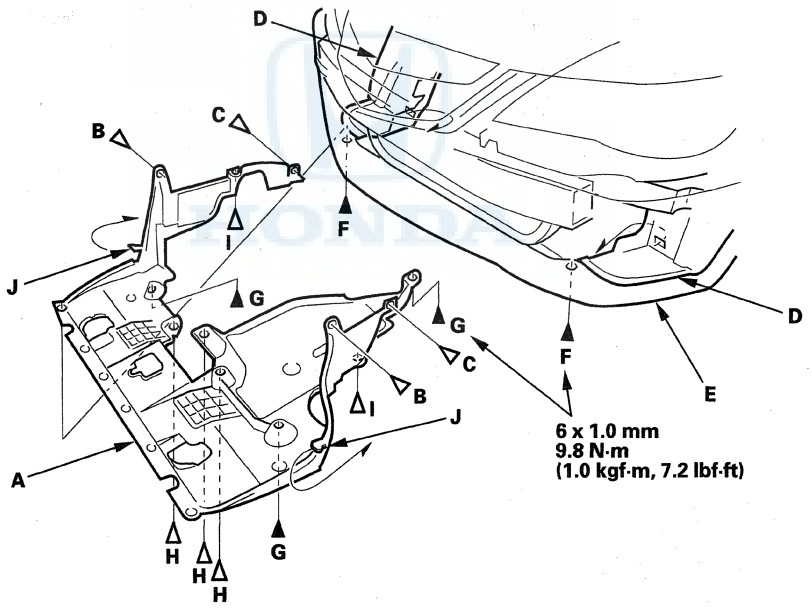

2. Install the splash shield in the reverse order of removal, and note these items:

   - If the clips are damaged or stress-whitened, replace them with new ones.
   - Push the clips into place securely.

Front Fender Fairing Replacement

1. Remove the front inner fender as needed (see page 20-176).

2. Open the door, and remove the clips that secure the front fender fairing (A). Remove the upper clip (B) from outside the door, and the lower clip (C) from inside the door.

Fastener Locations

B ▷ : Clip, 1 **C ▷ : Clip, 1**

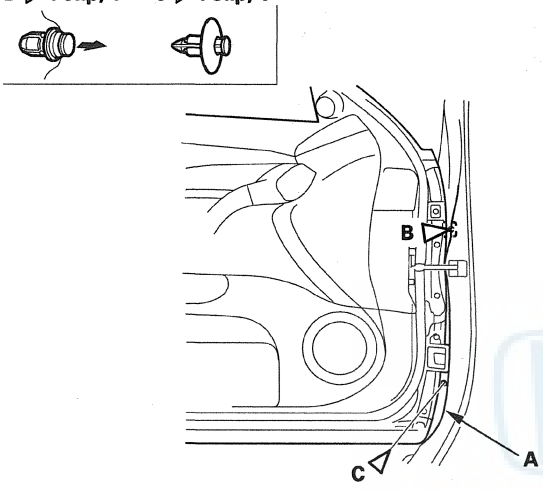

3. Release the clips (A, B) from the wheel arch.

Fastener Locations

A ▷ : Clip, 1 **B ▷ : Clip, 1**

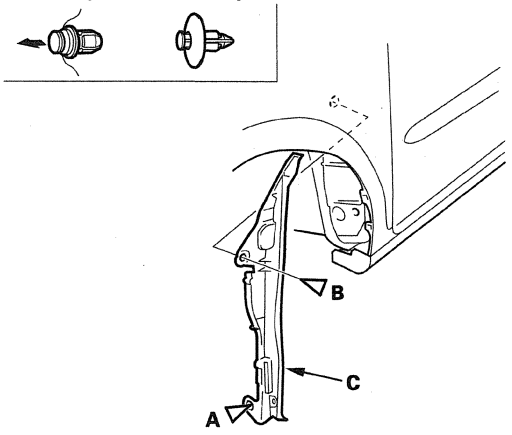

4. Remove the front fender fairing (C).

5. Install the fender fairing in the reverse order of removal, and note these items:

- If the clips are damaged or stress-whitened, replace them with new ones.
- Before installing the clips in the door opening area, install the front fender fairing (A) on the front fender (B) as shown.
- Push the clips into place securely.

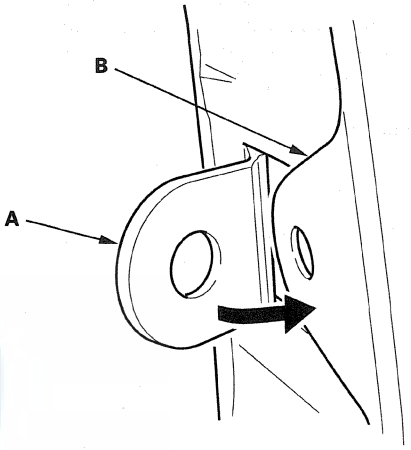

Rear Inner Fender Replacement

Special Tools Required
Push pin puller 07AAC-SJAA100

NOTE:
- Take care not to scratch the body.
- Use the special tool to remove the clips.

1. Remove the rear suspension damper unit (see page 18-38).

2. Remove the rear inner fender (A).

   -1 Remove the screws (B) and the clip (C) from the rear bumper (D) and from the rear inner fender.
   -2 Remove the clips (E, F).
   -3 On the front of the rear wheel arch, remove the clips (G) securing the side sill (H) and rear inner fender.
   -4 Pull out the rear inner fender.

   NOTE: Left side shown, right side is similar.

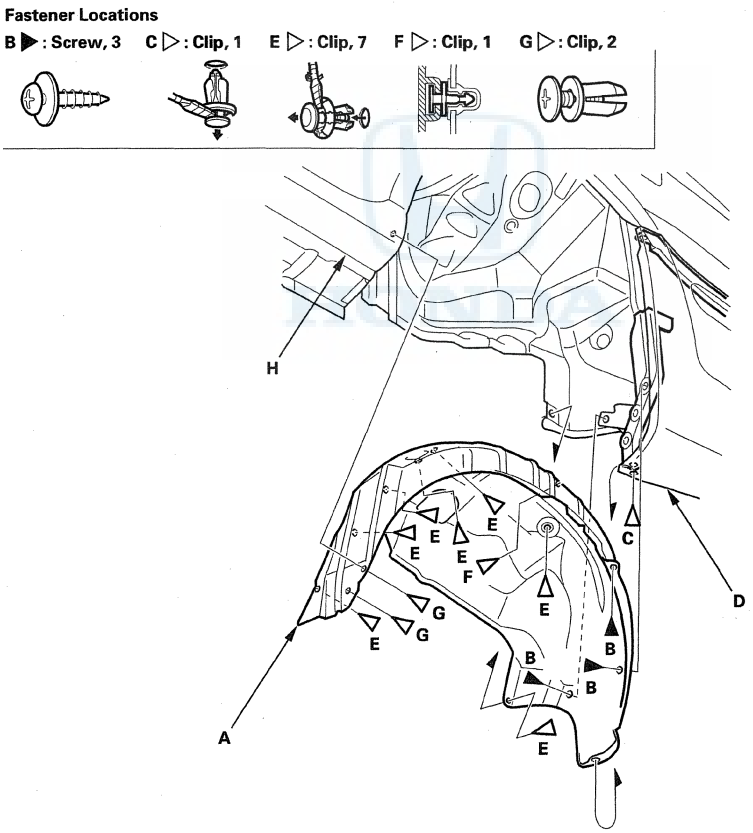

3. Install the inner fender in the reverse order of removal, and note these items:

   - If the clips are damaged or stress-whitened, replace them with new ones.
   - Push the clips into place securely.

Rear Air Outlet Replacement

1. Remove the rear bumper (see page 20-153).
2. Remove the clips and the rear bumper side spacer (A).

Fastener Locations

▷ : Clip, 2

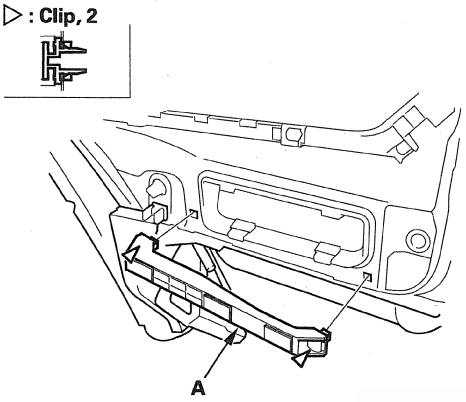

3. Detach the hooks (A), then remove the rear air outlet (B). Take care not to scratch the body.

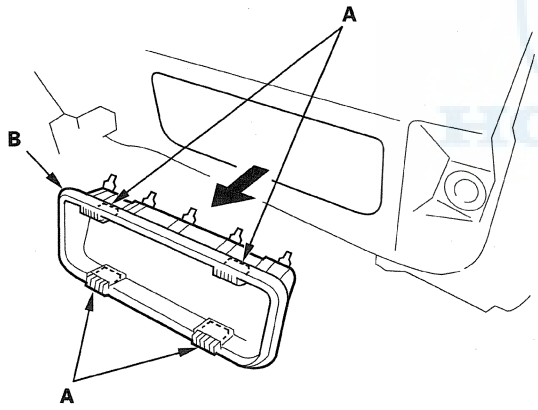

4. Install the air outlet by pushing on the hook portions until the hooks snap into place.

Rear Wheel Arch Protector Replacement

1. Remove the rear wheel arch protector (A) by pulling it away from the wheel arch.

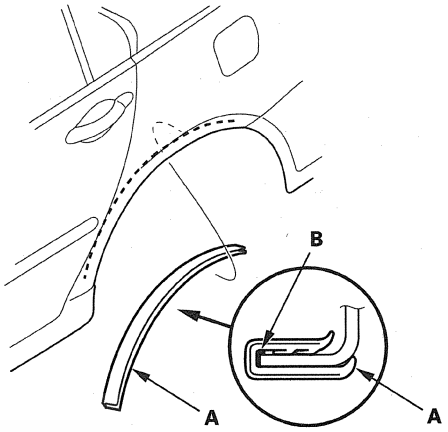

2. Apply clear weatherstrip sealant (B) into the channel of the wheel arch protector all the way around.
3. To reinstall the rear wheel arch protector, align it with the rear of the wheel arch, and then push it into place securely.

Side Undercarriage Cover Replacement

Special Tools Required
Push pin puller 07AAC-SJAA100

NOTE: Use the special tool to remove the clips.

1. Remove the side undercarriage covers (A).
   -1 Remove the clips (B) and the bolts (C).
   -2 Remove the bolts (D) securing the side undercarriage cover and the fuel tank cover (E).

Fastener Locations
B ▷ : Clip, 5 C ▶ : Bolt, 3 D ▶ : Bolt, 2

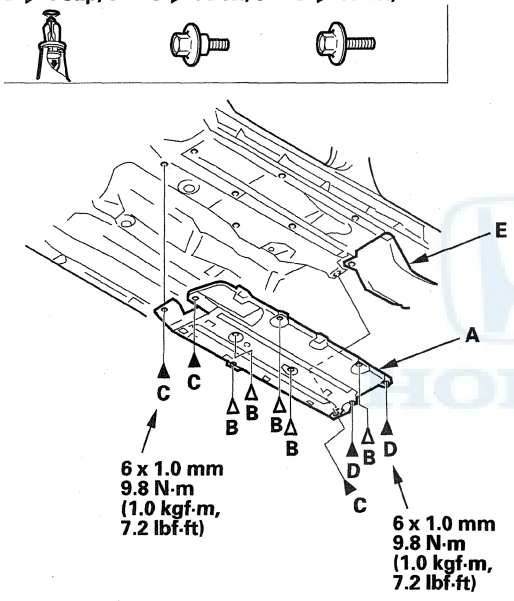

2. Install the cover in the reverse order of removal, and note these items:
   - If the clips are damaged or stress-whitened, replace them with new ones.
   - Push the clips into place securely.

Rear Undercarriage Cover Replacement

Special Tools Required
Push pin puller 07AAC-SJAA100

NOTE: Use the special tool to remove the clips.

1. Remove the clips (A) and the bolts (B), then remove the rear undercarriage cover (C). Take care not to scratch the rear bumper.

Fastener Locations
A ▷ : Clip, 3 B ▶ : Bolt, 2

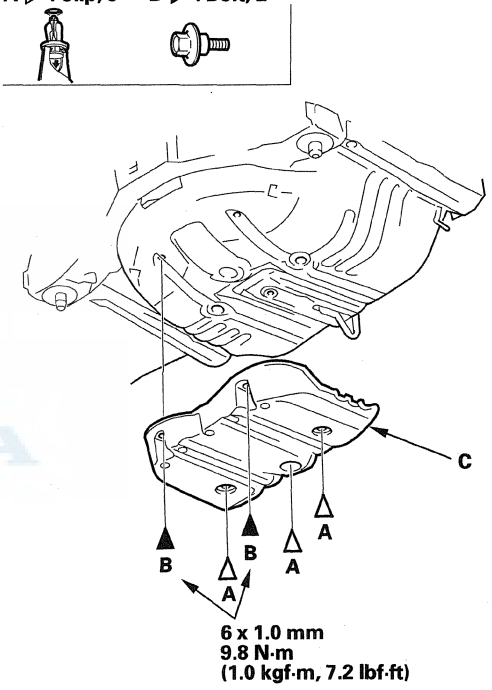

2. Install the cover in the reverse order of removal, and note these items:
   - If the clips are damaged or stress-whitened, replace them with new ones.
   - Push the clips into place securely.

Component Location Index

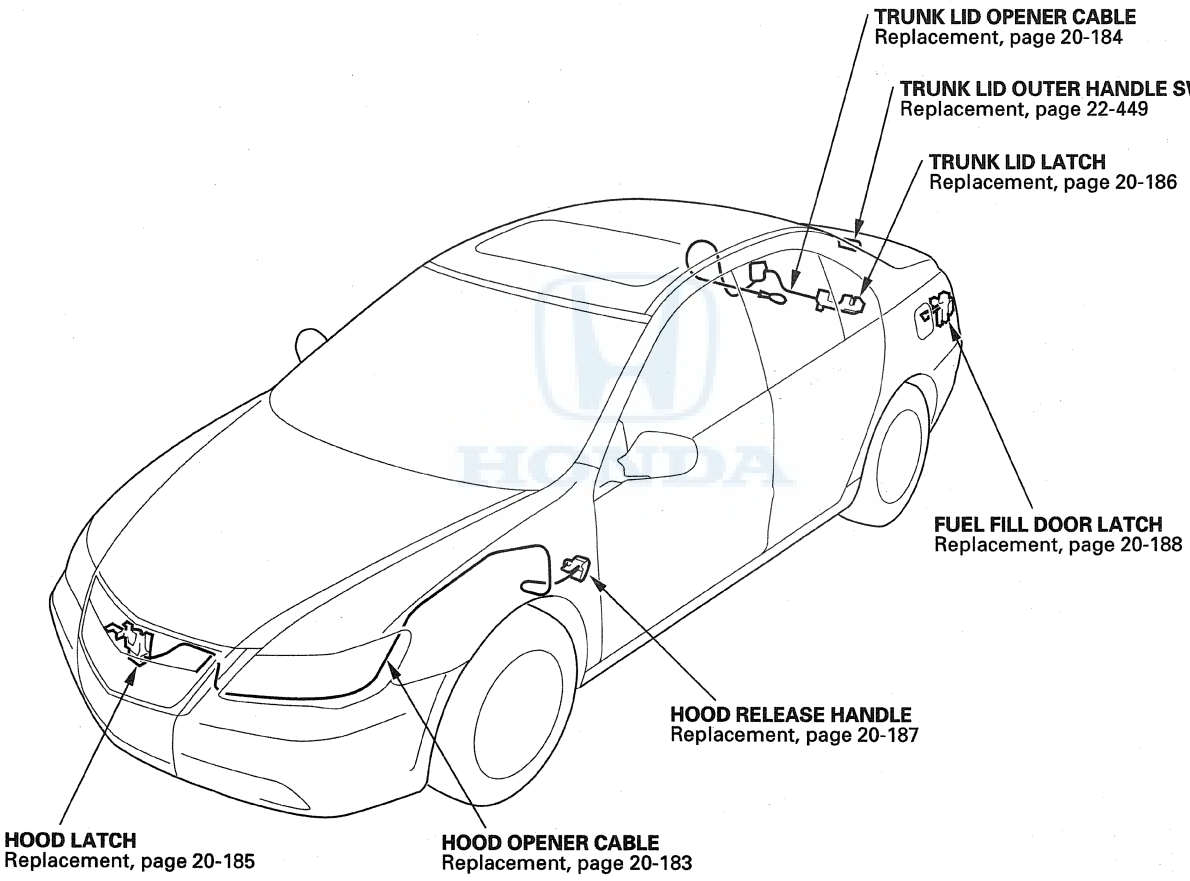

Hood Opener Cable Replacement

NOTE:
- Put on gloves to protect your hands.
- Take care not to scratch the body and related parts.

1. Remove these items:

   - Upper grille cover (see page 20-163)
   - Headlight, left side (see page 22-220)
   - Radiator tank, as needed
   - Front inner fender, left side as necessary (see page 20-176)
   - Kick panel, left side (see page 20-67)

2. Disconnect the hood opener cable (A) from the hood latch (B) (see page 20-185).

Fastener Locations
▷ : **Clip, 5**

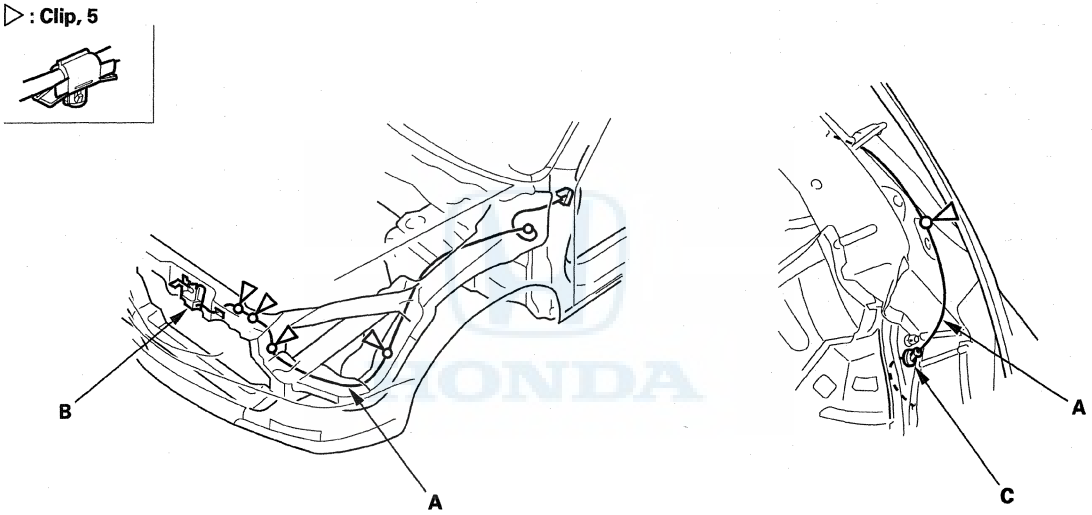

3. Using a clip remover, detach the clips, and remove the grommet (C) from the body, then remove the hood opener cable from the vehicle. Take care not to kink the cable.

4. Install the cable in the reverse order of removal.

   NOTE: If the clips are damaged or stress-whitened, replace them with new ones.

Trunk Lid Opener Cable Replacement

NOTE:
- Put on gloves to protect your hands.
- Take care not to scratch the body and related parts.

1. Remove these items (see page 20-83):
   - Trunk floor lid
   - Trunk rear trim panel
   - Trunk front trim panel
   - Trunk side trim panel, right side
   - Trunk upper trim panel

2. Disconnect the trunk lid opener cable from the trunk inside lever (see page 20-186).

3. Remove the trunk lid opener cable (A) and the clip (B) from the opener cable bracket (C).

Fastener Locations
B, D▷ : Clip, 2

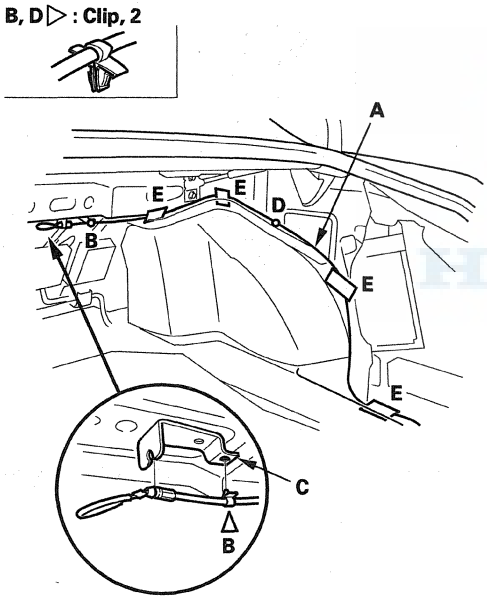

4. Use a clip remover to release the clip (D). Remove the cushion tapes (E).

5. Remove the trunk lid opener cable from the vehicle. Take care not to kink the cable.

6. Install the opener cable in the reverse order of removal, and note these items:
   - Align the marks (A) on the opener cable (B) with the cable clips (C) as shown.
   - If the clips are damaged or stress-whitened, replace them with new ones.
   - Push the clips into place securely.

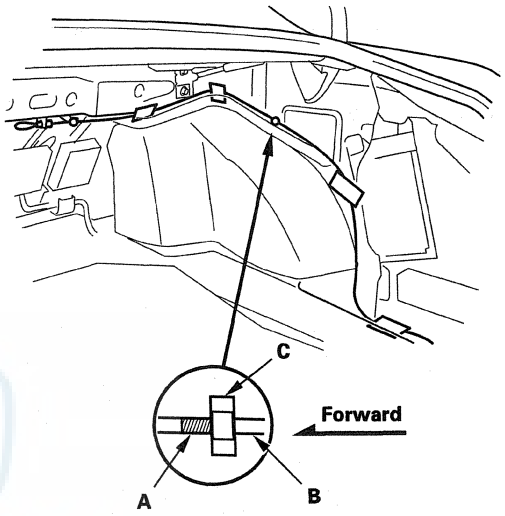

Hood Latch Replacement

1. Remove the upper grille (see page 20-162).

2. Remove the bolts, then remove the hood latch cover (A).

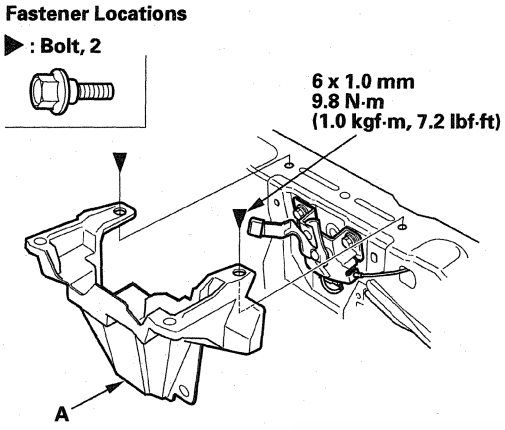

3. Disconnect the hood latch switch connector (A), then remove the connector clip from the body.

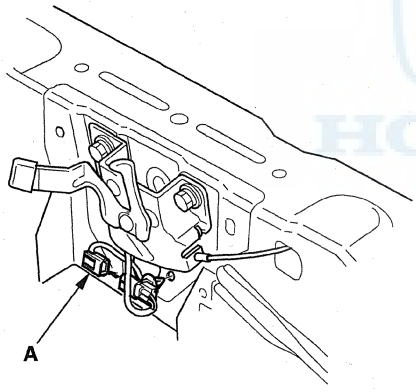

4. Remove the bolts, then remove the hood latch (A) from the body.

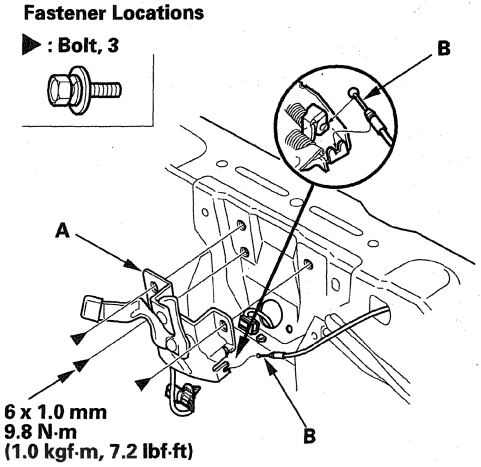

5. Disconnect the hood opener cable (B) from the hood latch. Take care not to kink the cable.

6. Install the latch in the reverse order of removal, and note these items:

   - Apply multipurpose grease to the hood latch as indicated by the arrows.
   - Make sure the hood opener cable is connected properly and the hood latch switch connector is plugged in properly.
   - Make sure the cable actuates the latch before you close the hood.
   - Adjust the hood latch alignment (see step 4 on page 20-155).
   - Make sure the hood opens properly and locks securely.

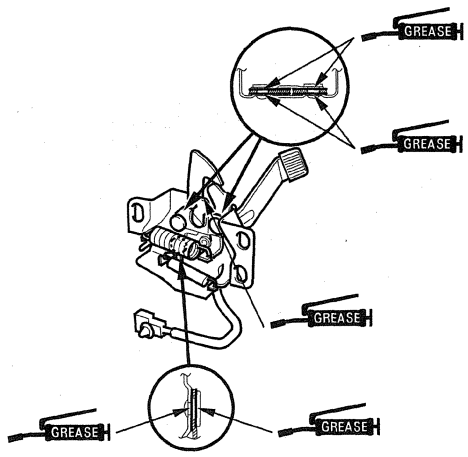

Trunk Lid Latch Replacement

NOTE: Put on gloves to protect your hands.

1. Remove these items (see page 20-83):
   - Trunk rear trim panel
   - Trunk side trim panel, right side
2. Remove the bolts, then remove the trunk inside lever (A) from the body. Take care not to kink the opener cable.

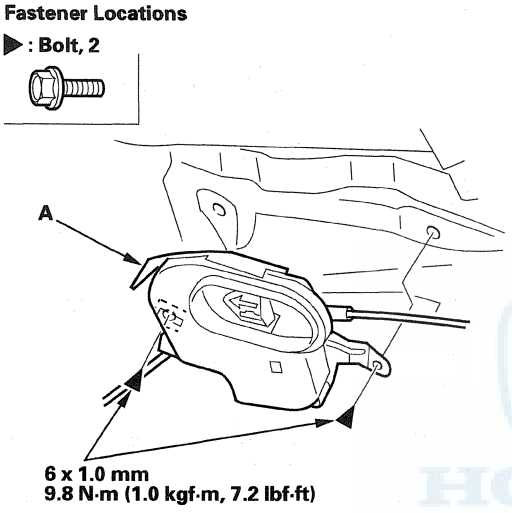

3. Disconnect the trunk lid opener cables (A, B) from the joint bushings (C). Take care not to kink the opener cables.

   NOTE: If the joint bushings are damaged or stress-whitened, replace them with new ones.

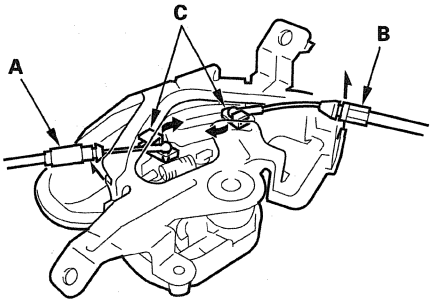

4. Disconnect the actuator connector (A), then remove the connector clip (B). Remove the trunk lid opener cable (C) from the clip (D) on the body. Take care not to kink the opener cable.

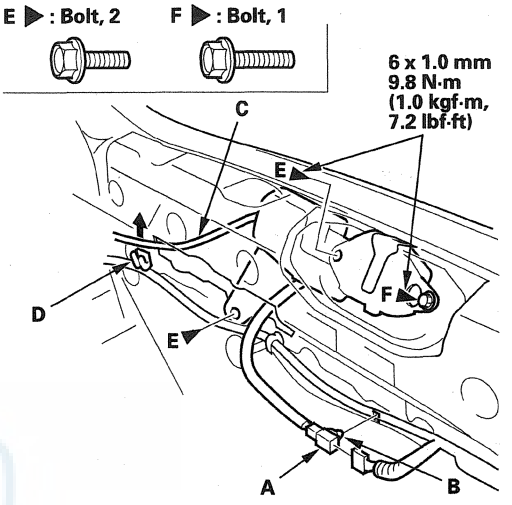

5. Remove the bolts (E) and loosen the bolt (F), then remove the latch.
6. Pull the trunk lid latch (A) away to release the bolt (B) from the hole (C) in the body.

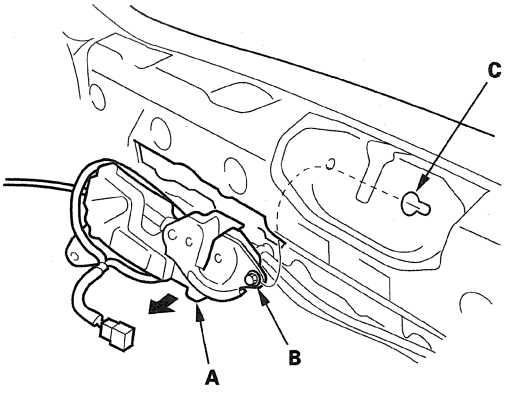

7. Disconnect the trunk lid opener cable (A) from the joint bushing (B).

   NOTE: If the joint bushing is damaged or stress-whitened, replace it with a new one.

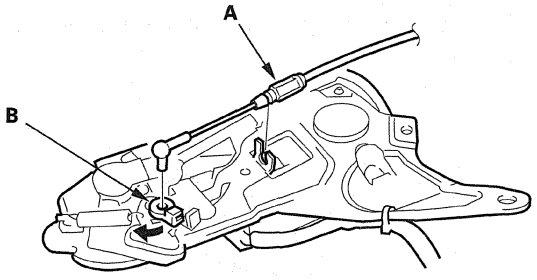

8. Install the latch in the reverse order of removal, and note these items:

   - Make sure the actuator connector is plugged in properly and the opener cable is connected properly.
   - Make sure the trunk lid opens properly, and locks securely.

Hood Release Handle Replacement

1. Remove the bolt, and release the hook (A), then remove the hood release handle (B) from the dashboard.

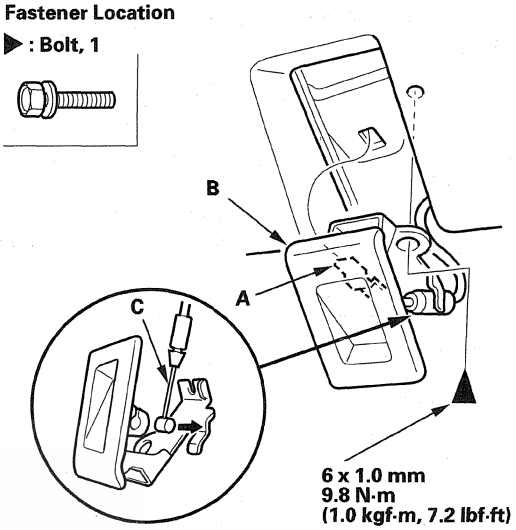

2. Disconnect the hood opener cable (C) from the hood release handle. Take care not to kink the cable.

3. Install the hood release handle in the reverse order of removal, and note these items:

   - Make sure the hood opener cable is connected properly.
   - Make sure the hood opens properly.

Fuel Fill Door Latch/Actuator Replacement

NOTE:
- Put on gloves to protect your hands.
- Take care not to scratch the body.

1. Remove the left trunk side trim panel (see page 20-83).

2. Remove the fuel fill door latch/actuator (A).

   1 Remove the fuel fill door latch (B) by turning it 90 ° from the body.
   2 Disconnect the actuator connector (C).
   3 Loosen the screws, then remove the actuator by sliding it forward.

Fastener Locations

▶ : Screw, 2

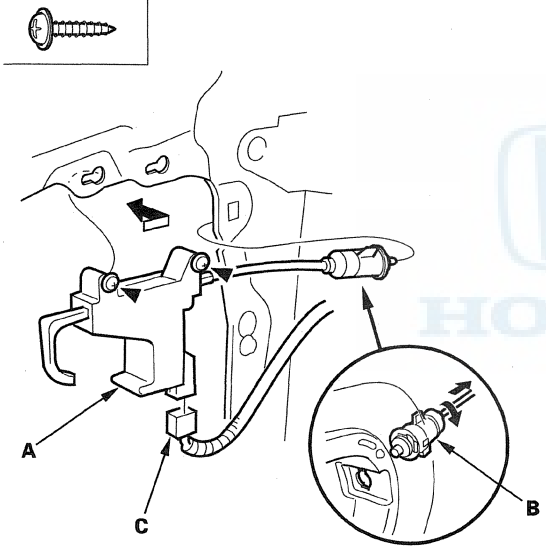

3. Install the fuel fill door latch/actuator in the reverse order of removal, and note these items:

   - Apply multipurpose grease to the hood latch as indicated by the arrows.
   - Make sure the door opens properly, and locks securely.
   - Make sure the actuator connector is plugged in properly.

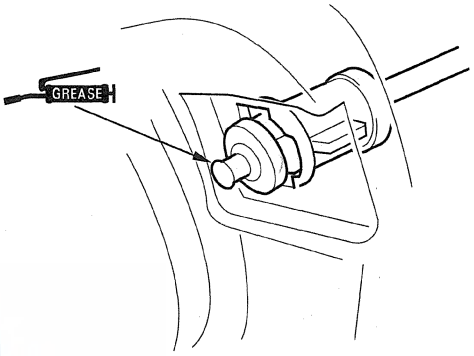

Frame Brace Replacement

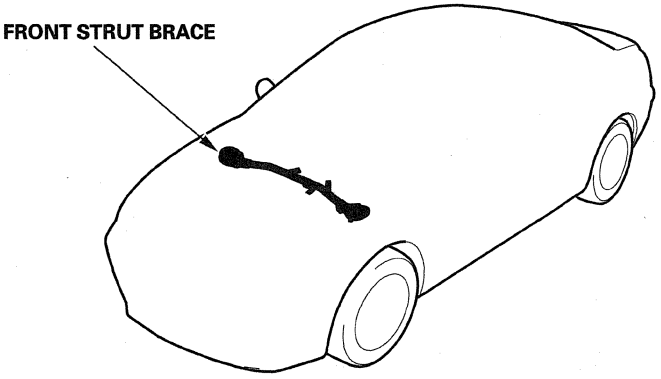

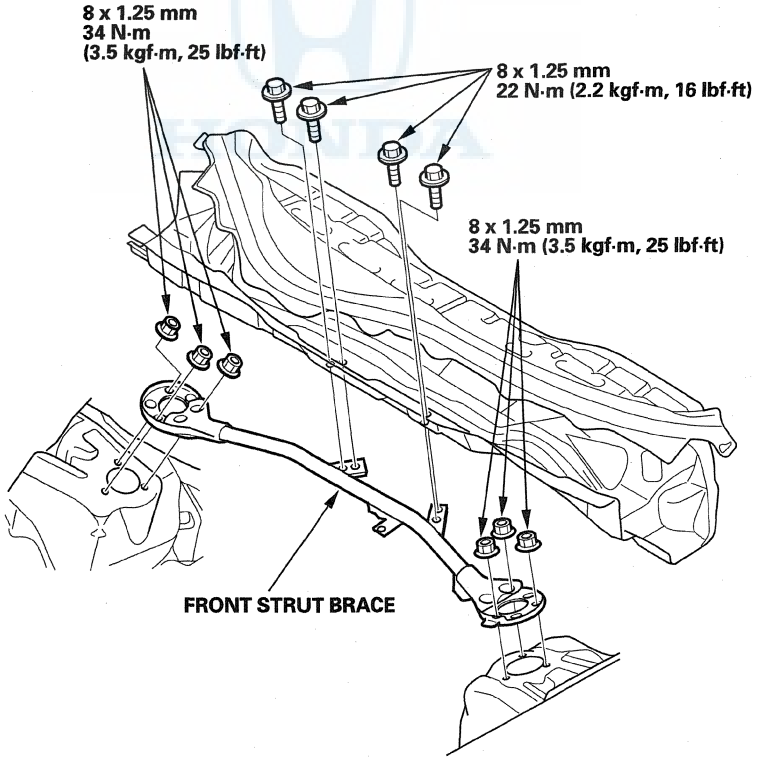

Subframe Replacement

Special Tools Required
Subframe alignment pin 070AG-SJAA10S

Front Subframe Torque

After removing the subframe mounting bolts and front suspension subframe rear bracket mounting bolts, be sure to replace them with new ones.

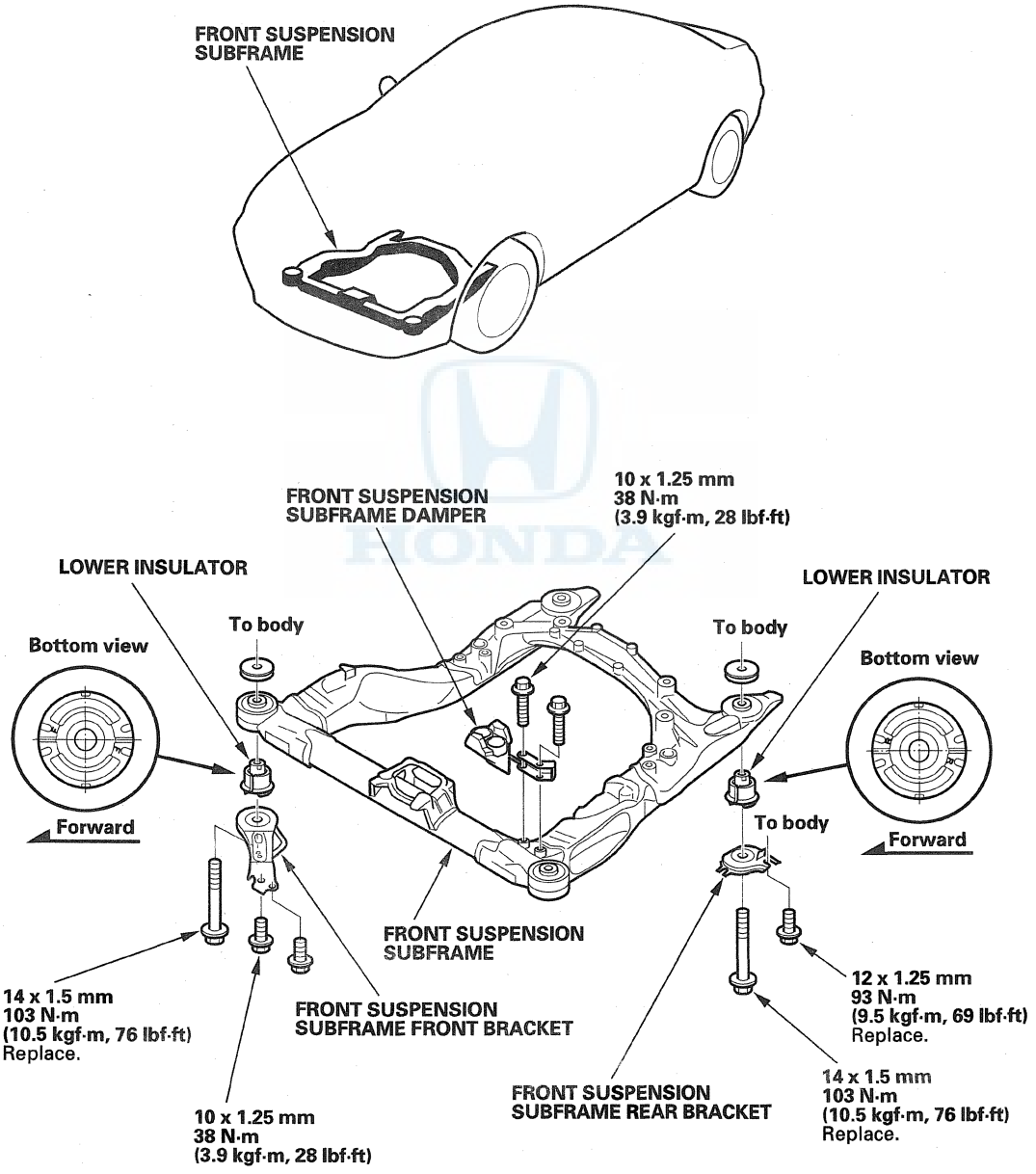

Front Subframe Alignment

NOTE: Using the special tool, align the suspension subframe using the following sequence.

1. Align the front suspension subframe (A).

   -1 Lift the front suspension subframe up to the body, and loosely install new subframe mounting bolts and the brackets (B).
   -2 Insert the alignment pin (C) into the alignment hole in the right rear of the subframe, then align the subframe with the body.
   -3 Loosely tighten the subframe mounting bolt (D) at the right rear.
   -4 Insert the alignment pin into the positioning hole in the left rear of the subframe, and then align the subframe with the body.
   -5 Loosely tighten the subframe mounting bolt (E) at the left rear.
   -6 Loosely tighten both front subframe mounting bolts (F).
   -7 Insert the alignment pin into the positioning hole in the right rear of the subframe.
   -8 Loosen the subframe mounting bolt at the right rear, and fit the lower insulator (G), in the subframe, then tighten the mounting bolt to the specified torque.
   -9 Tighten the remaining subframe mounting bolts and the bracket mounting bolts (H) to the specified torque.

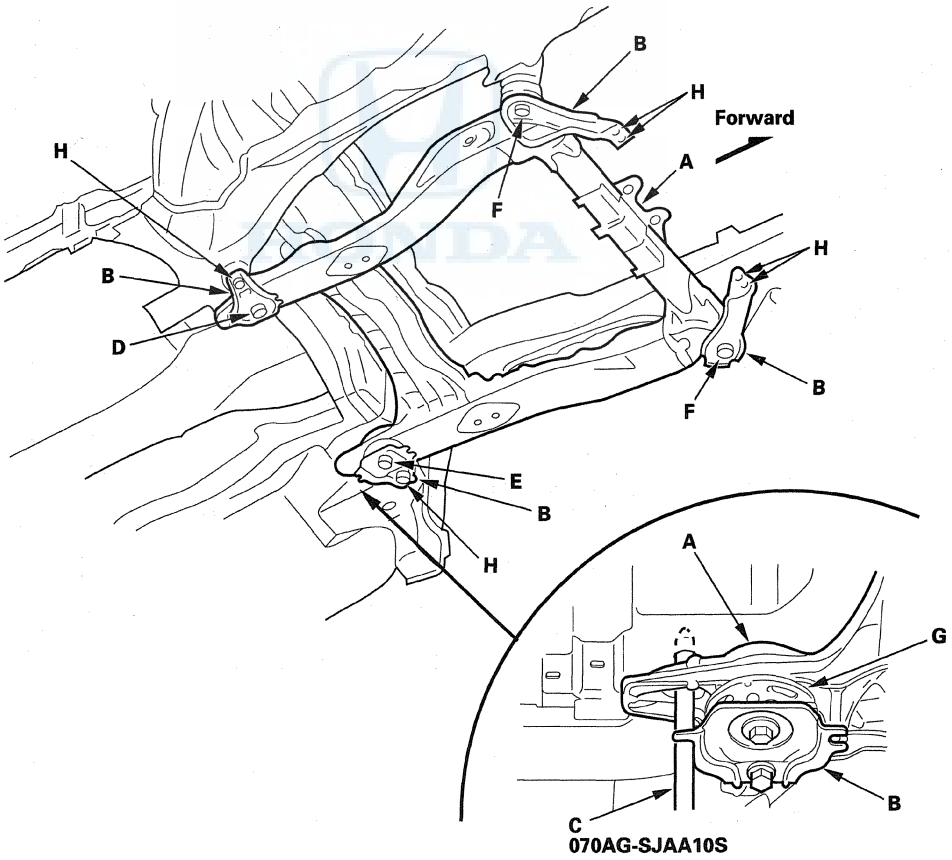

2. After reinstalling all removed parts, check and adjust the front wheel alignment (see page 18-5).

(cont'd)

Subframe Replacement (cont'd)

Rear Subframe Torque

After removing the subframe mounting bolts, be sure to replace them with new ones.

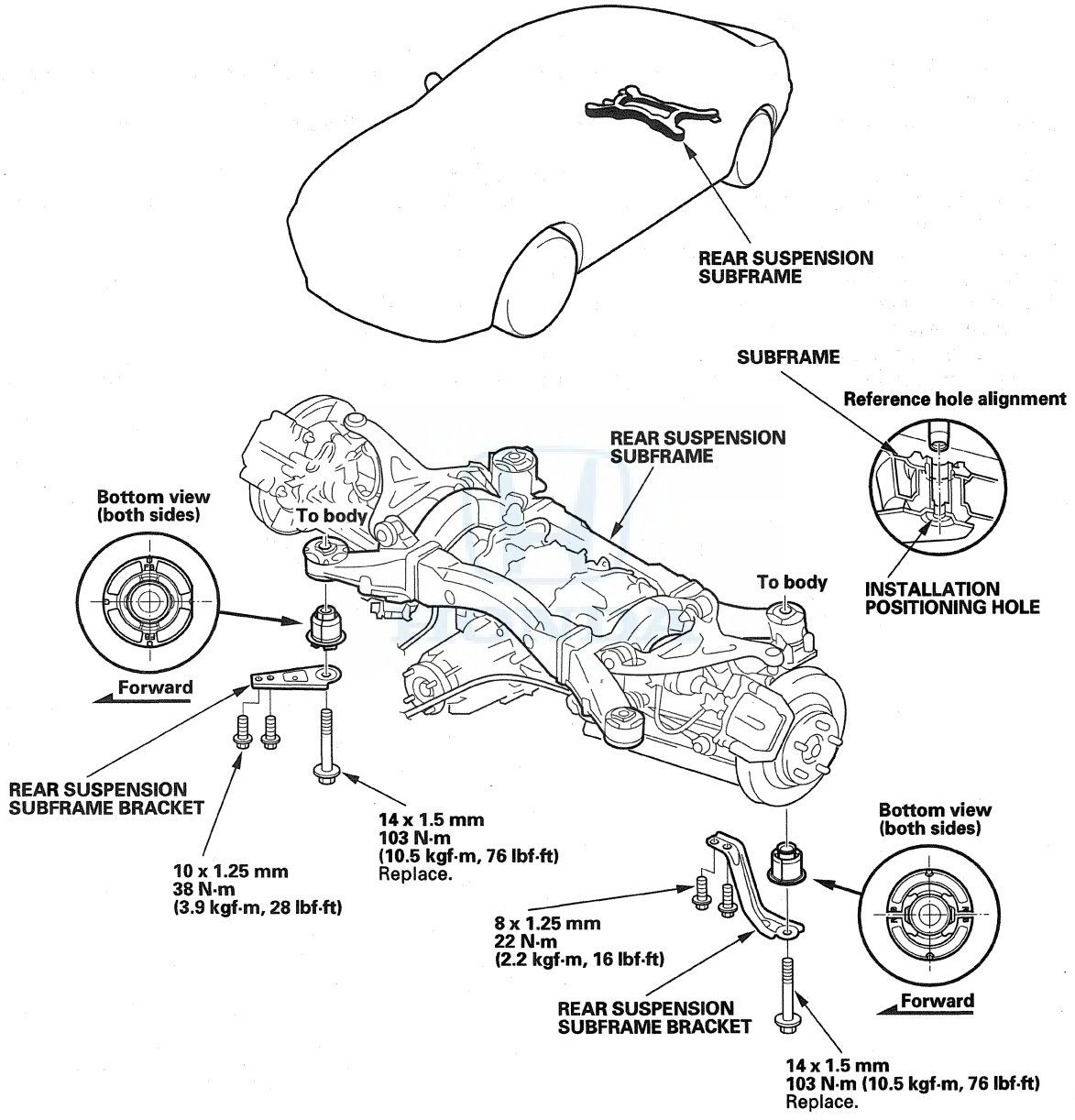

Frame Repair Chart

Top View

Unit: mm (in)
ø: Inner diameter

a	For front subframe ø16 (0.63)		g	Locating hole ø15 (0.59)	
b	Locating hole ø25 (0.98)		h	For front subframe ø16 (0.63)	
c1	For engine side mount ø13 (0.51) right side		i	Locating hole ø25 (0.98)	
c2	For engine side mount ø15 (0.59) right side		j	Locating hole ø25 (0.98)	
c3	For engine side mount ø15 (0.59) right side		k1	Locating hole ø15 (0.59) left side	
d	Front damper center ø50 (1.97)		k2	Locating hole ø15 (0.59) right side	
e	For upper arm ø11 (0.43)		t	For CBS mount ø11 (0.43)	
f	For upper arm ø11 (0.43)				

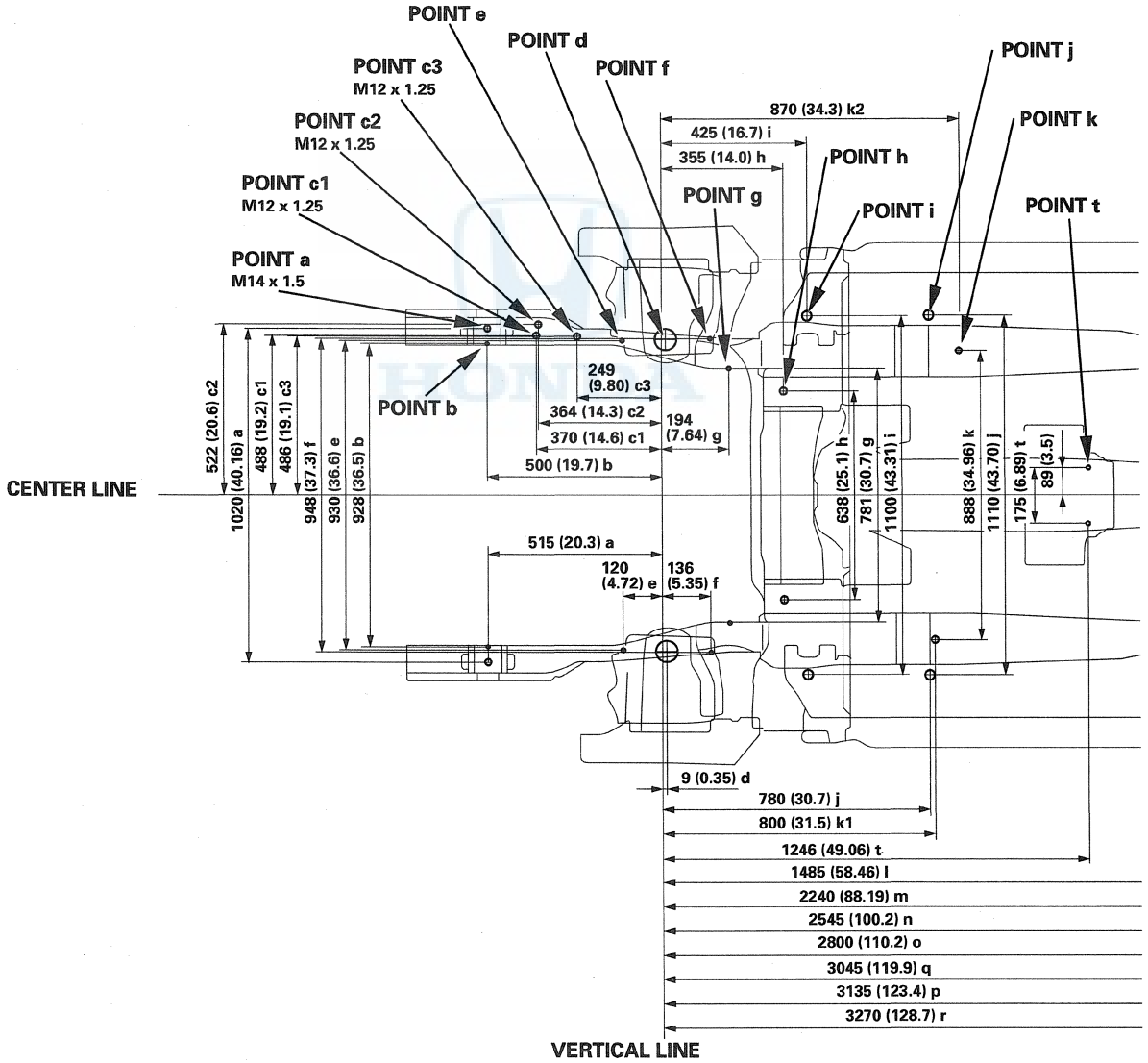

l Locating hole ø25 (0.98)
m Locating hole ø20 (0.79)
n For rear subframe ø26.1 (1.03)
o Rear damper center ø59.5 (2.34)
p For rear subframe ø26.1 (1.03)
q Locating hole ø20 (0.79)
r Locating hole ø25 (0.98)

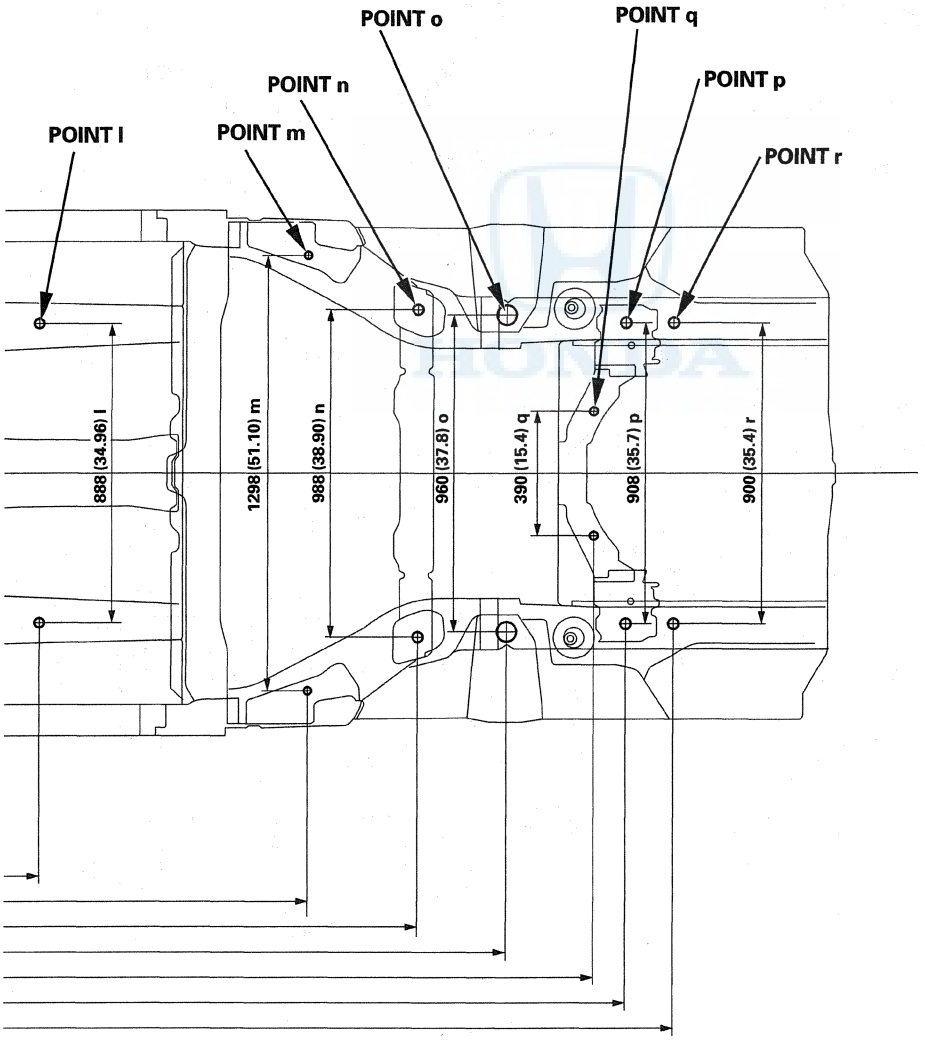

(cont'd)

Frame Repair Chart (cont'd)

Side View

Unit: mm (in)
ø: Inner diameter

a	For front subframe ø16 (0.63)		g	Locating hole ø15 (0.59)	
b	Locating hole ø25 (0.98)		h	For front subframe ø16 (0.63)	
c1	For engine side mount ø13 (0.51) right side		i	Locating hole ø25 (0.98)	
c2	For engine side mount ø15 (0.59) right side		j	Locating hole ø25 (0.98)	
c3	For engine side mount ø15 (0.59) right side		k1	Locating hole ø15 (0.59) left side	
d	Front damper center ø50 (1.97)		k2	Locating hole ø15 (0.59) right side	
e	For upper arm ø11 (0.43)		t	For CBS mount ø11 (0.43)	
f	For upper arm ø11 (0.43)				

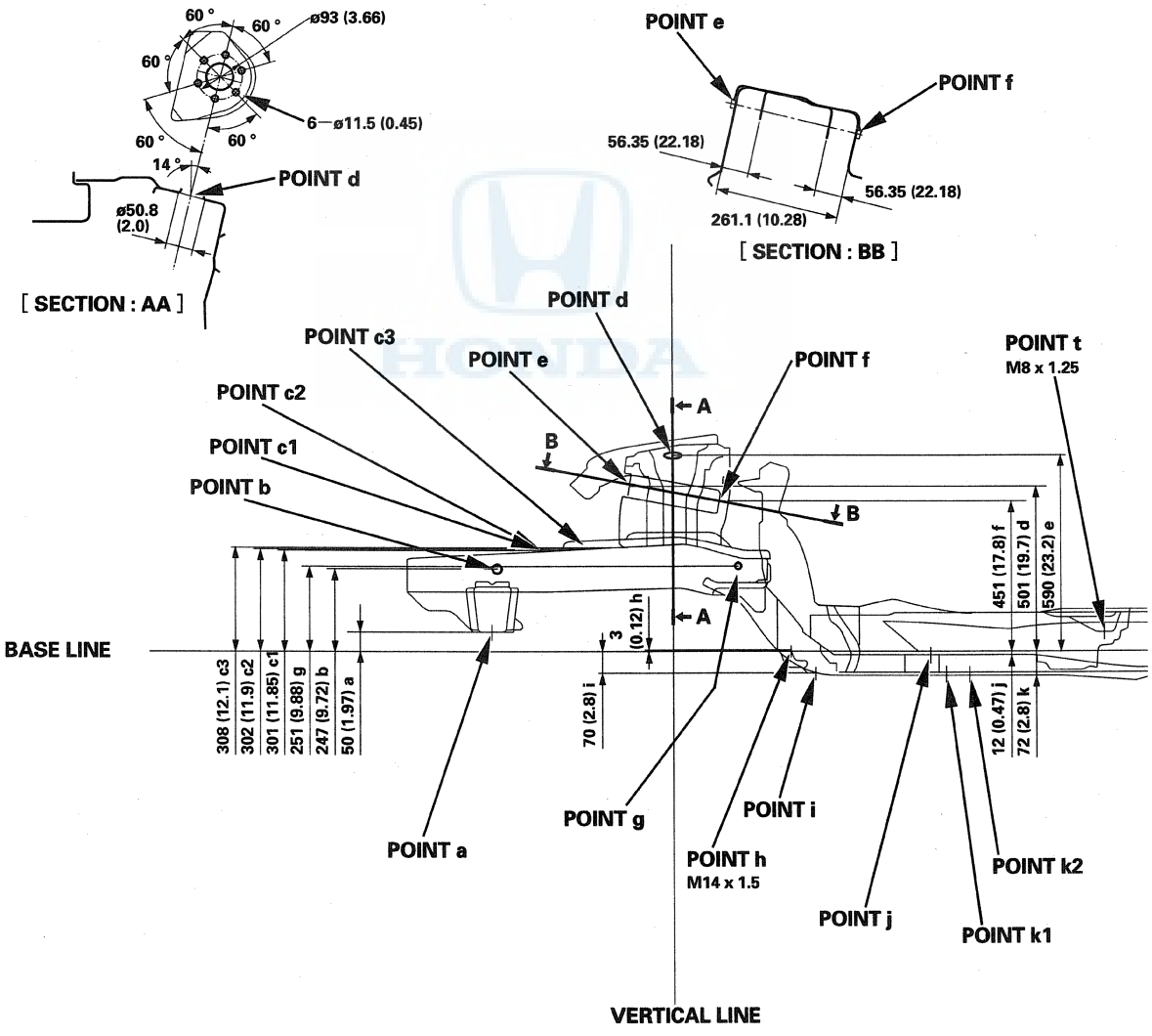

l Locating hole ø25 (0.98)
m Locating hole ø20 (0.79)
n For rear subframe ø26.1 (1.03)
o Rear damper center ø59.5 (2.34)
p For rear subframe ø26.1 (1.03)
q Locating hole ø20 (0.79)
r Locating hole ø25 (0.98)

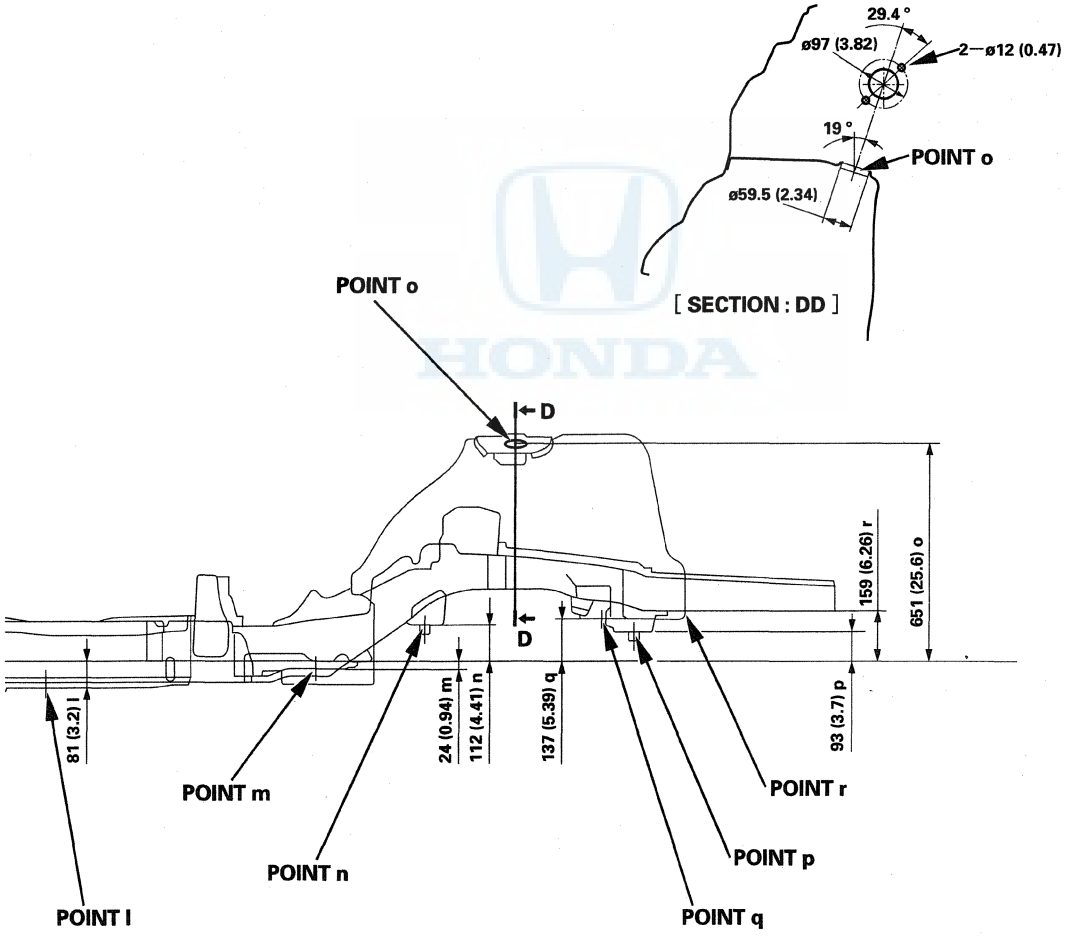

SUPPLEMENTAL RESTRAINT SYSTEM (SRS) (If HVAC maintenance is required)

The Acura RL SRS includes a driver's airbag in the steering wheel hub, a passenger's airbag in the dashboard above the glove box, seat belt tensioners in the front seat belt retractors, side curtain airbags in the sides of the roof, and side airbags in the front seat-backs. Information necessary to safely service the SRS is included in this Service Manual. Items marked with an asterisk (*) on the contents page include or are located near SRS components. Servicing, disassembling, or replacing these items require special precautions and tools, and should be done by an authorized Acura dealer.

- To avoid rendering the SRS inoperative, which could lead to personal injury or death in the event of a severe frontal or side collision, all SRS service work should be done by an authorized Acura dealer.
- Improper service procedures, including incorrect removal and installation of the SRS, could lead to personal injury caused by unintentional deployment of the airbags, side airbags, and/or side curtain airbags.
- Do not bump or impact the SRS unit, front impact sensors, side impact sensors, or rear safing sensor, especially when the ignition switch is in ON (II), or for at least 3 minutes after the ignition switch is turned to LOCK (0); otherwise, the system may fail in a collision, or the airbags may deploy.
- SRS electrical connectors are identified by yellow color coding. Related components are located in the steering column, center console, dashboard, driver's dashboard lower cover, in the dashboard above the glove box, in the front seats, in the roof side, and around the floor. Do not use electrical test equipment on these circuits.

HVAC (Heating, Ventilation, and Air Conditioning)

HVAC (Heating, Ventilation, and Air Conditioning)

Special Tools 21-2

Climate Control

Component Location Index 21-3
A/C Service Tips and Precautions 21-6
A/C Refrigerant Oil Replacement 21-6
A/C Line Replacement 21-8
A/C System Inspection 21-9
General Troubleshooting Information 21-10
DTC Troubleshooting Index 21-17
Symptom Troubleshooting Index 21-19
System Description 21-22
Circuit Diagram 21-30
DTC Troubleshooting 21-33
Control Motor Power Supply Circuit Troubleshooting 21-64
Aspirator Fan Circuit Troubleshooting 21-65
Climate Control Power and Ground Circuit Troubleshooting 21-66
A/C Compressor Clutch Circuit Troubleshooting 21-67
In-car Temperature Sensor Test 21-71
In-car Temperature Sensor Replacement 21-71
Vent Air Temperature Sensor Test 21-72
Driver's Vent Air Temperature Sensor Replacement 21-72
Passenger's Vent Air Temperature Sensor Replacement 21-73
Outside Air Temperature Sensor Test 21-73
Outside Air Temperature Sensor Replacement 21-74
Sunlight Sensor Test 21-74
Sunlight Sensor Replacement 21-75
Evaporator Temperature Sensor Test 21-75
Evaporator Temperature Sensor Replacement 21-76
Power Transistor Test 21-76
Driver's Air Mix Control Motor Test 21-77
Driver's Air Mix Control Motor Replacement 21-78
Passenger's Air Mix Control Motor Test 21-78
Passenger's Air Mix Control Motor Replacement 21-79
Driver's Cool Vent Control Motor Test 21-79
Driver's Cool Vent Control Motor Replacement 21-80
Passenger's Cool Vent Control Motor Test 21-80
Passenger's Cool Vent Control Motor Replacement 21-81
Mode Control Motor Test 21-81
Mode Control Motor Replacement 21-82
Recirculation Control Motor Test 21-82
Recirculation Control Motor Replacement 21-83
Rear Vent Control Motor Test 21-83
Rear Vent Control Motor Replacement 21-84
Climate Control Unit Removal/Installation 21-84
Dust and Pollen Filter Replacement 21-85
Blower Unit Removal/Installation 21-85
Blower Unit Component Replacement 21-86
Evaporator Core Replacement 21-87
Expansion Valve Replacement 21-88
* Heater Unit/Core Replacement 21-89
Heater Valve Cable Adjustment 21-92
A/C Compressor Replacement 21-93
A/C Compressor Clutch Check 21-94
A/C Compressor Clutch Overhaul 21-95
A/C Compressor Relief Valve Replacement 21-97
A/C Condenser Replacement 21-97
Receiver/Dryer Desiccant Replacement 21-99
Refrigerant Recovery 21-100
System Evacuation 21-101
System Charging 21-102
Refrigerant Leak Check 21-103
A/C System Noise Check 21-107
A/C System Test 21-109

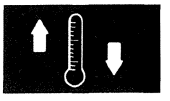

Special Tools

Ref. No.	Tool Number	Description	Qty
①	07SAZ-001000A	Backprobe Set	2

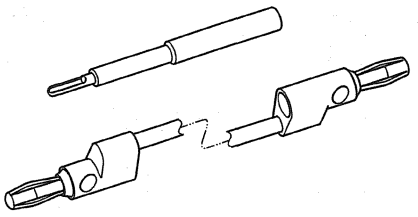

①

Component Location Index

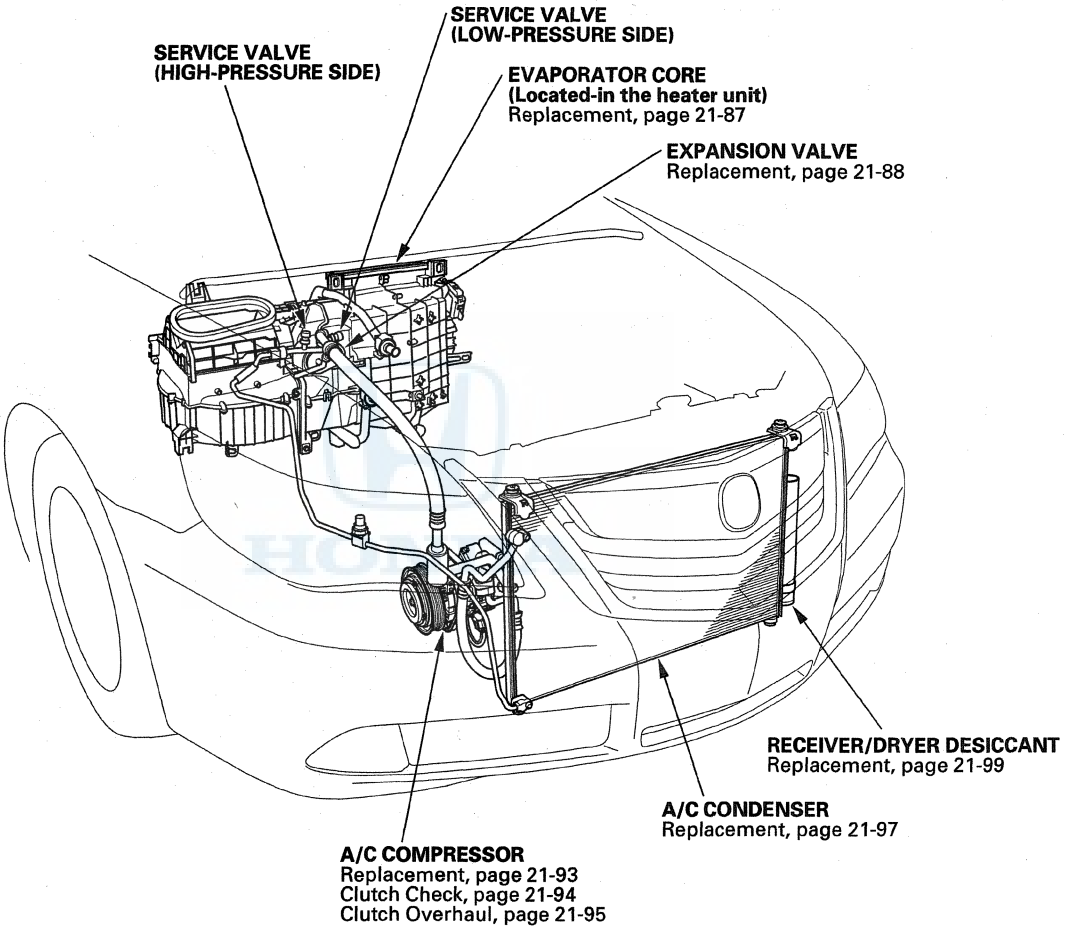

(cont'd)

Component Location Index (cont'd)

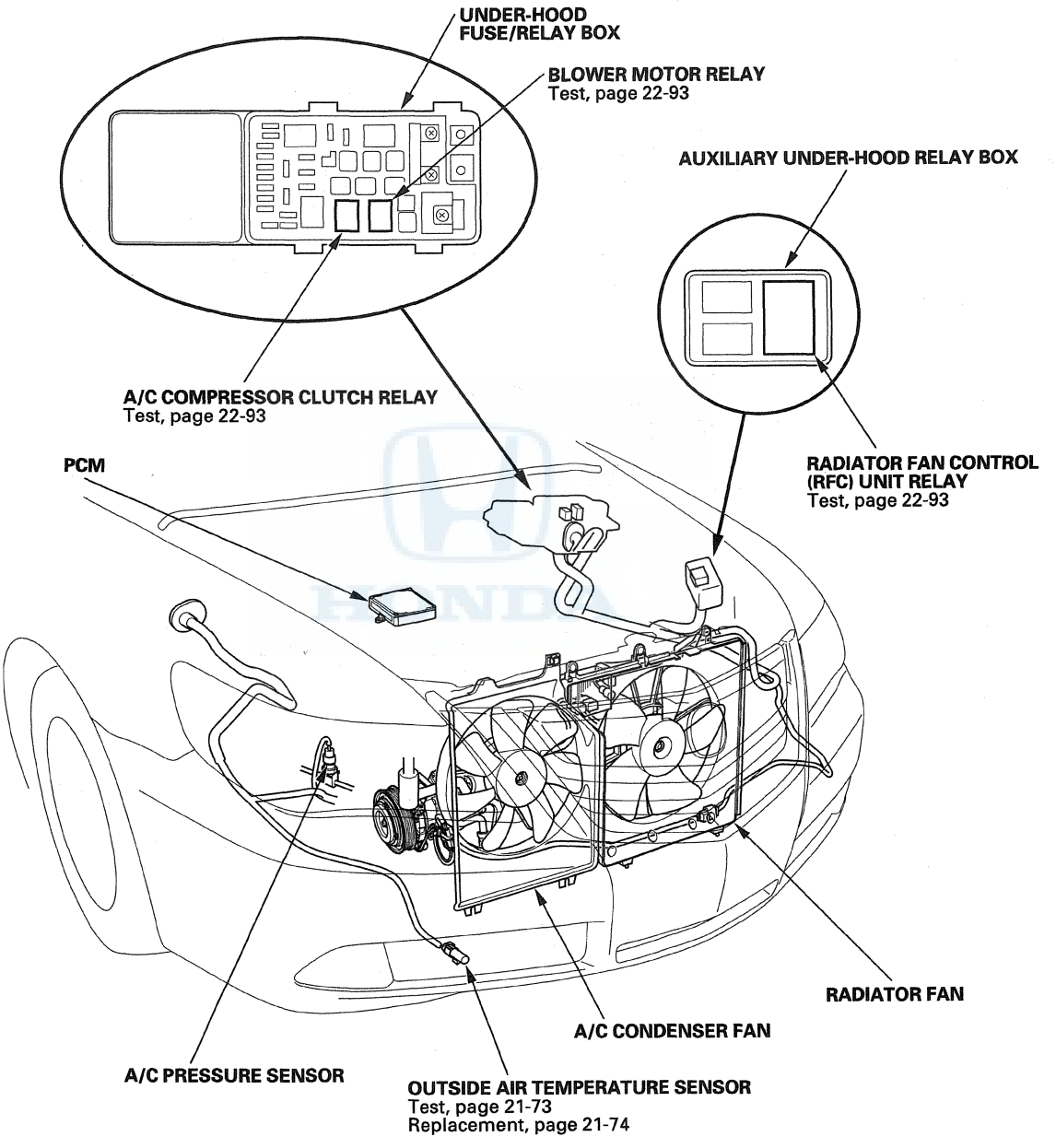

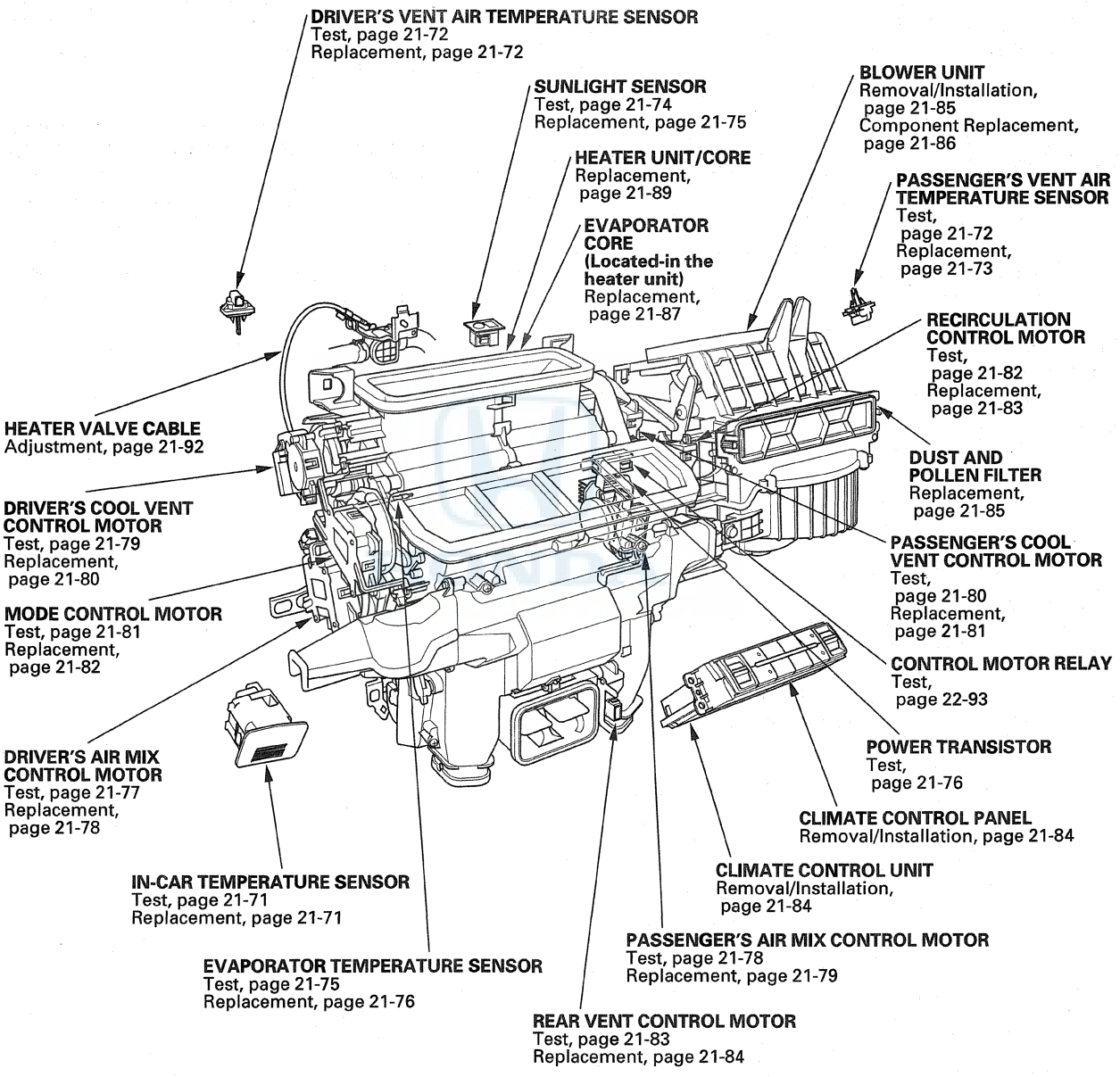
DRIVER'S VENT AIR TEMPERATURE SENSOR
Test, page 21-72
Replacement, page 21-72
SUNLIGHT SENSOR
Test, page 21-74
Replacement, page 21-75
BLOWER UNIT
Removal/Installation, page 21-85
Component Replacement, page 21-86
HEATER UNIT/CORE
Replacement, page 21-89
PASSENGER'S VENT AIR TEMPERATURE SENSOR
Test, page 21-72
Replacement, page 21-73
EVAPORATOR CORE (Located-in the heater unit)
Replacement, page 21-87
RECIRCULATION CONTROL MOTOR
Test, page 21-82
Replacement, page 21-83
HEATER VALVE CABLE
Adjustment, page 21-92
DUST AND POLLEN FILTER
Replacement, page 21-85
DRIVER'S COOL VENT CONTROL MOTOR
Test, page 21-79
Replacement, page 21-80
PASSENGER'S COOL VENT CONTROL MOTOR
Test, page 21-80
Replacement, page 21-81
MODE CONTROL MOTOR
Test, page 21-81
Replacement, page 21-82
CONTROL MOTOR RELAY
Test, page 22-93
POWER TRANSISTOR
Test, page 21-76
DRIVER'S AIR MIX CONTROL MOTOR
Test, page 21-77
Replacement, page 21-78
CLIMATE CONTROL PANEL
Removal/Installation, page 21-84
IN-CAR TEMPERATURE SENSOR
Test, page 21-71
Replacement, page 21-71
CLIMATE CONTROL UNIT
Removal/Installation, page 21-84
PASSENGER'S AIR MIX CONTROL MOTOR
Test, page 21-78
Replacement, page 21-79
EVAPORATOR TEMPERATURE SENSOR
Test, page 21-75
Replacement, page 21-76
REAR VENT CONTROL MOTOR
Test, page 21-83
Replacement, page 21-84

A/C Service Tips and Precautions

⚠ WARNING

- Compressed air mixed with the R-134a forms a combustible vapor.
- The vapor can burn or explode causing serious injury.
- Never use compressed air to pressure test R-134a service equipment or vehicle air conditioning systems.

⚠ CAUTION

- Air conditioning refrigerant or lubricant vapor can irritate your eyes, nose, or throat.
- Be careful when connecting service equipment.
- Do not breathe refrigerant or vapor.

The air conditioning system uses HFC-134a (R-134a) refrigerant and polyalkyleneglycol (PAG) refrigerant oil, which are not compatible with CFC-12 (R-12) refrigerant or mineral oil. Do not use R-12 refrigerant or mineral oil in this system, and do not attempt to use R-12 servicing equipment; damage to the air conditioning system or your servicing equipment will result.
Use only service equipment that is U.L.-listed and is certified to meet the requirements of SAE J2210 to remove R-134a from the air conditioning system.

If accidental system discharge occurs, ventilate the work area before resuming service.

R-134a service equipment or vehicle air conditioning systems should not be pressure tested or leak tested with compressed air.

Additional health and safety information may be obtained from the refrigerant and lubricant manufacturers.

- Always disconnect the negative cable from the battery whenever replacing air conditioning parts.
- Keep moisture and dirt out of the system. When disconnecting any lines, plug or cap the fittings immediately; don't remove the caps or plugs until just before you reconnect each line.
- Before connecting any hose or line, apply a few drops of refrigerant oil to the O-ring.
- When tightening or loosening a fitting, use a second wrench to support the matching fitting.
- When discharging the system, use an R-134a refrigerant recovery/recycling/charging station; don't release refrigerant into the atmosphere.

A/C Refrigerant Oil Replacement

Recommended PAG oil: DENSO ND-OIL 8

P/N 38897-PR7-A01AH: 120 mL (4 fl·oz)

It is important to have the correct amount of refrigerant oil in the A/C system to ensure proper lubrication of the compressor. Too little oil damages the compressor; too much oil reduces the cooling capacity of the system, and can produce high vent temperatures.

- To avoid contamination, do not return the oil to the container once dispensed, and never mix it with other refrigerant oils.
- Immediately after using the oil, reinstall the cap on the container, and seal it to avoid moisture absorption.
- Do not spill the refrigerant oil on the vehicle; it may damage the paint; if it gets on the paint, wash it off immediately.

Add the recommended refrigerant oil in the amount listed if you replace any of the following parts:

A/C condenser
(including Dryer
Desiccant) .....35 mL (1 1/5 fl·oz)
Evaporator .....45 mL (1 1/2 fl·oz)
Line or hose .....10 mL (1/3 fl·oz)
Receiver/Dryer
Desiccant .....10 mL (1/3 fl·oz)
Leakage repair .....25 mL (5/6 fl·oz)
A/C compressor .....For A/C compressor replacement, subtract the volume of oil drained from the removed A/C compressor from 127.5 mL (4 1/3 fl·oz), and drain the calculated volume of oil from the new A/C compressor: 127.5 mL (4 1/3 fl·oz) — Volume of removed A/C compressor = Volume to drain from new A/C compressor.

NOTE: Even if no oil is drained from the removed A/C compressor, don't drain more than 50 mL (1 2/3 fl·oz) from the new A/C compressor.

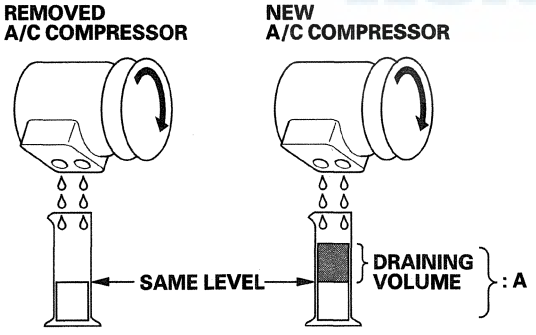

A: 127.5 mL (4 1/3 fl·oz)

A/C Line Replacement

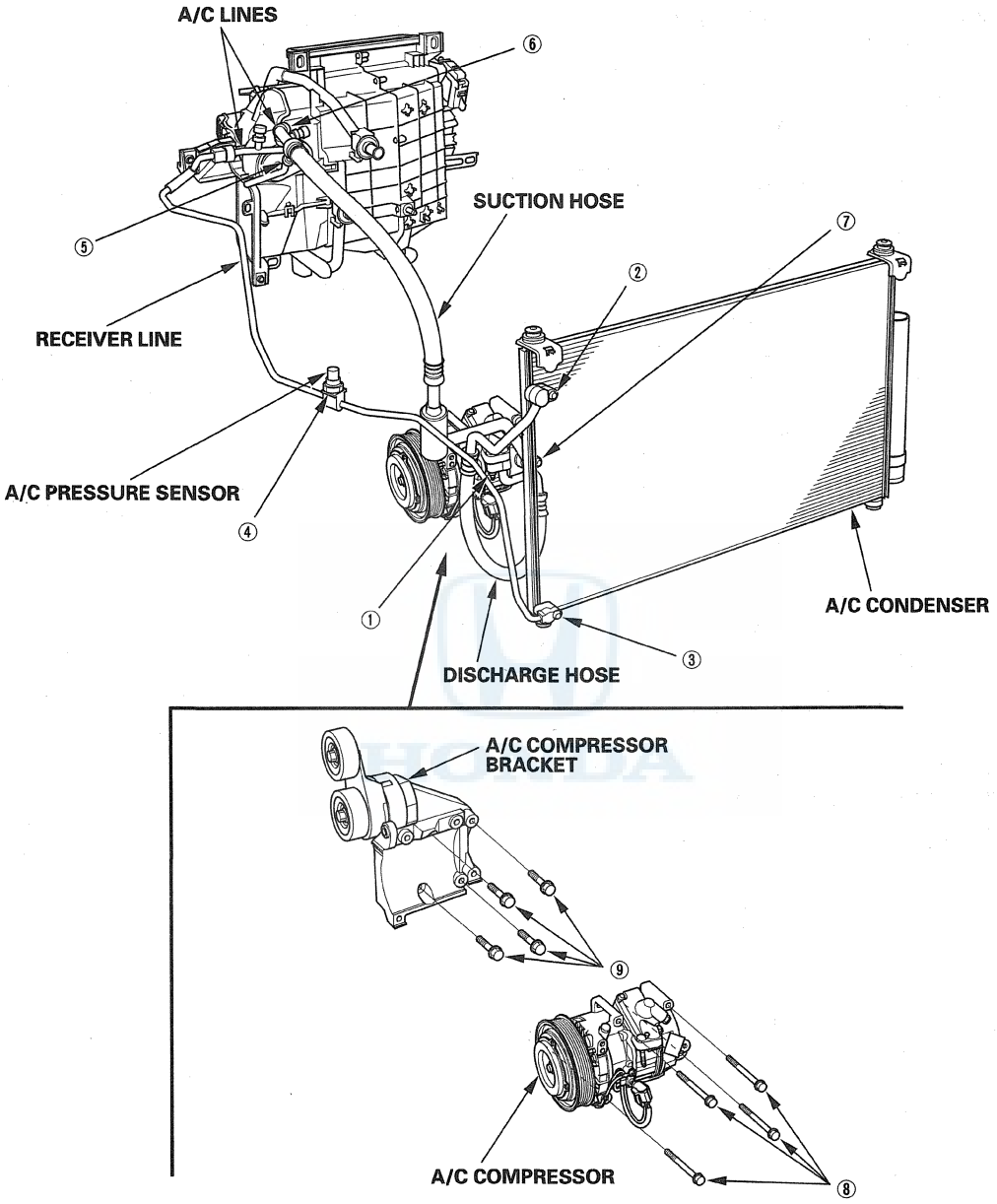

① Discharge hose to the A/C compressor (6 x 1.0 mm): 9.8 N·m (1.0 kgf·m, 7.2 lbf·ft)
② Discharge hose to the A/C condenser (6 x 1.0 mm): 9.8 N·m (1.0 kgf·m, 7.2 lbf·ft)
③ Receiver line to the A/C condenser (6 x 1.0 mm): 9.8 N·m (1.0 kgf·m, 7.2 lbf·ft)
④ Receiver line to the A/C pressure sensor (11 x 1.0 mm): 10.8 N·m (1.1 kgf·m, 8.0 lbf·ft)
⑤ A/C lines to the evaporator (6 x 1.0 mm): 9.8 N·m (1.0 kgf·m, 7.2 lbf·ft)
⑥ A/C lines to the suction hose (6 x 1.0 mm): 9.8 N·m (1.0 kgf·m, 7.2 lbf·ft)
⑦ Suction hose to the A/C compressor (6 x 1.0 mm): 9.8 N·m (1.0 kgf·m, 7.2 lbf·ft)
⑧ A/C compressor to the A/C compressor bracket (8 x 1.25 mm): 21.5 N·m (2.2 kgf·m, 16 lbf·ft)
⑨ A/C compressor bracket to the engine block (10 x 1.25 mm): 44 N·m (4.5 kgf·m, 33 lbf·ft)

A/C System Inspection

Before troubleshooting any problem with the air conditioning system, do the following:

1. Check for collision damage or body shop work.
2. Make sure the ignition switch is in LOCK (0). Inspect the A/C components, the pressure lines, and the hoses for stains that may indicate a refrigerant or a compressor oil leak.

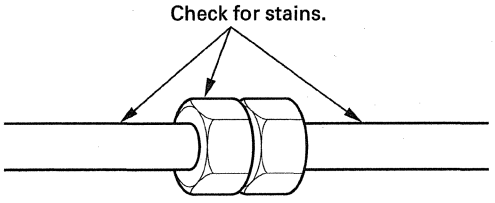

3. Check the A/C condenser for material clogging the fins or for damage to the fins:
   - Carefully clean any material from the A/C condenser fins with water and detergent. If deeper cleaning is required, clean the fins with Honda Brite cleaner (P/N 08732-0020B).
   - Be sure to dry the A/C condenser (A) completely.
   - Refer to the refrigerant leak check (see page 21-103) to confirm leaks if there is visible damage to the A/C condenser.

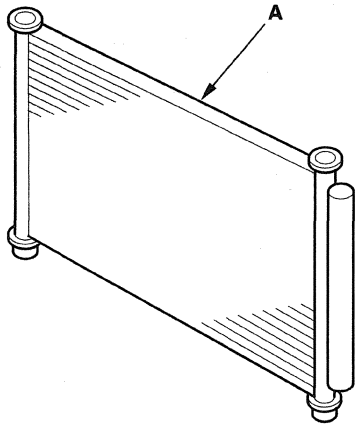

4. Inspect the drive belt (see page 4-33).
5. Make sure no material is blocking the airflow to the A/C condenser.
6. Check the dust and pollen filter, and replace it if it is clogged (see page 21-85).
7. Check for kinks or sharp bends in the A/C lines and hoses, which can greatly reduce system performance. Replace A/C lines and hoses if they are kinked or damaged (see page 21-8).
8. Start the engine, turn the air conditioning system on, and allow it to run for a few minutes and reach stable operation.
9. Check that the A/C operates at each position of the blower fan switch (except OFF). If the A/C does not operate, refer to the symptom troubleshooting.
10. Check that the A/C compressor clutch (A) is engaged. The pressure plate should be rotating at the same speed as the pulley. If the pressure plate does not engage, or fails to disengage, refer to the symptom troubleshooting.

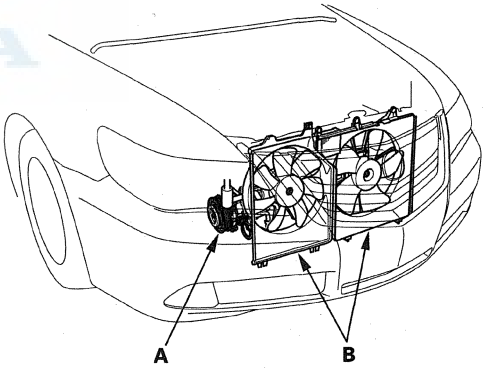

11. Check that the cooling fans (B) operate when the A/C compressor clutch is engaged. If either fan fails to operate when the A/C compressor clutch is engaged, refer to the symptom troubleshooting.
12. Check that the engine idle speed is correctly maintained when the A/C is switched on and off, and when the A/C compressor clutch is engaged and disengaged.

General Troubleshooting Information

How to Check for DTCs with the HDS

1. Make sure the ignition switch is in LOCK (0).
2. Connect the HDS to the data link connector (DLC) (A) located under the driver's side of the dashboard.

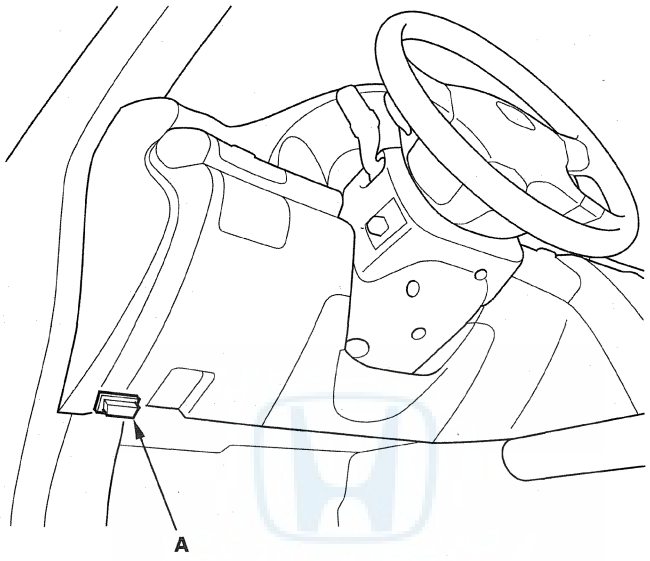

3. Turn the ignition switch to ON (II).
4. Make sure the HDS communicates with the vehicle and the climate control unit. If it doesn't, troubleshoot the DLC circuit (see page 11-211).
5. Select HVAC/CLIMATE CONTROL in the BODY ELECTRICAL menu.
6. Select DTCs in the HVAC/CLIMATE CONTROL menu.
7. Check for DTCs. If any DTCs are indicated, write down the DTCs, then go to the indicated DTC troubleshooting. If no DTCs are indicated, refer to symptom troubleshooting.

   NOTE:
   - After troubleshooting, clear the DTCs with the HDS.
   - For specific operations, refer to the user's manual that came with the HDS.

How to Use the Self-diagnostic Function with the HDS

1. Make sure the ignition switch is in LOCK (0).
2. Connect the HDS to the data link connector (DLC).
3. Turn the ignition switch to ON (II).
4. Make sure the HDS communicates with the vehicle and the climate control unit. If it doesn't, troubleshoot the DLC circuit (see page 11-211).
5. Select HVAC/CLIMATE CONTROL in the BODY ELECTRICAL menu.
6. Select INSPECTION in the HVAC/CLIMATE CONTROL menu.
7. Select CLIMATE CONTROL SELF TEST in the INSPECTION menu.
8. Check for DTCs. If any DTCs are indicated, write down the DTCs, then go to the indicated DTC troubleshooting.

   NOTE:
   - After troubleshooting, clear the DTCs with the HDS.
   - For specific operations, refer to the user's manual that came with the HDS.

(cont'd)

General Troubleshooting Information (cont'd)

How to Use the Self-diagnostic Function without HDS

The climate control unit has a self-diagnostic function. To run the self-diagnostic function, do the following:

NOTE: Before troubleshooting the climate control system, refer to B-CAN System Diagnosis Test Mode A Troubleshooting (see page 22-131).

1. Turn the ignition switch to ON (II).
2. Press and hold the three buttons (Menu, Map/Guide, and Cancel), and keep them pressed for about 5 seconds. The display screen will go directly to the "Select Diagnosis Items" menu.
3. Use the interface dial to select Self-Diagnosis, then select A/C. The screen will go to Aircon, then select Aircon Diag.

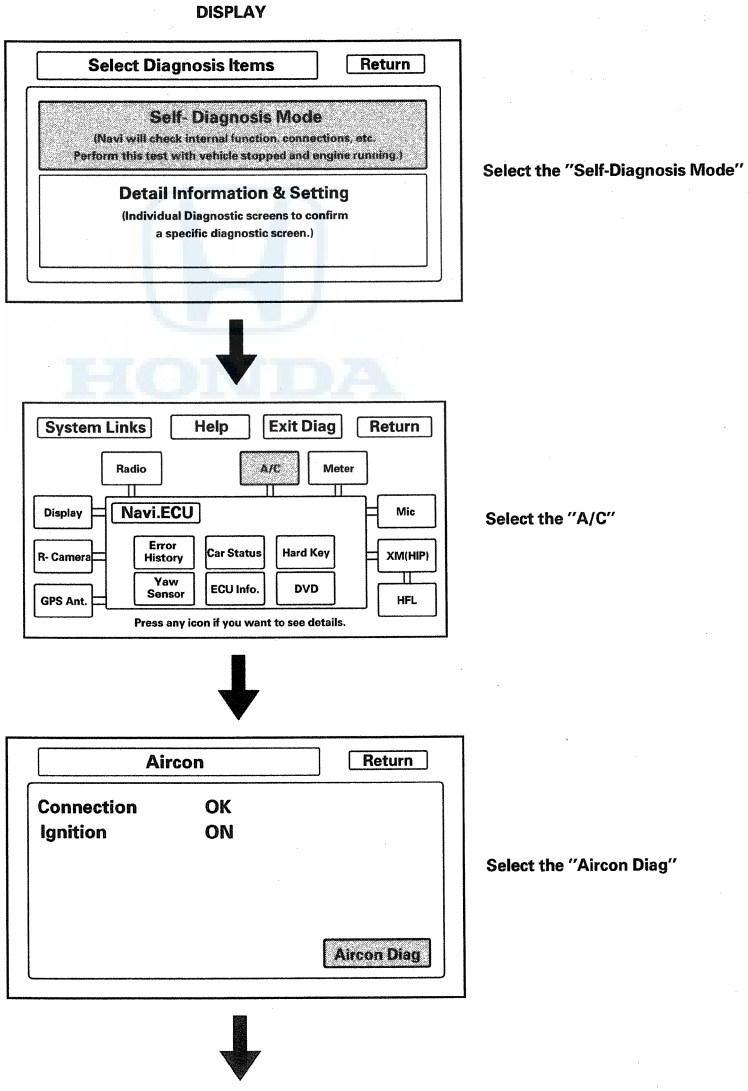

DISPLAY

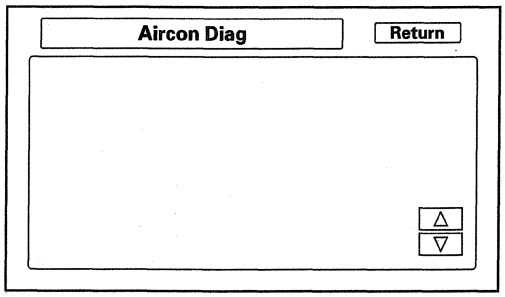

4. Press and hold the OFF button, then press the rear window defogger button five times within 10 seconds. Release the buttons. All the LEDs blink for 2 seconds, then the self-diagnostic function begins.

   NOTE: The blower motor should run at various speeds when in the self-diagnostic mode.

   - If there is any problem in the system, the display will indicate it. To determine the meaning of the indication, refer to the table that follows.
   - If there are no problems detected, the display will show normal.

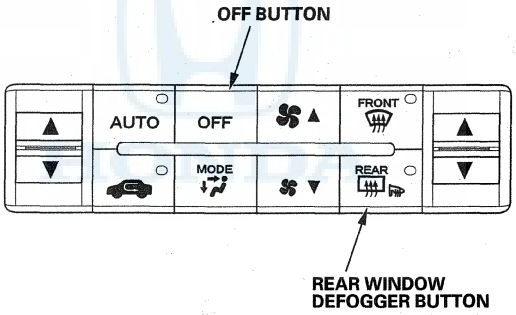

DISPLAY

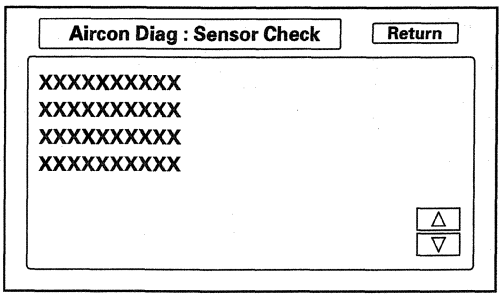

Canceling the Self-diagnostic Function

5. Turn the ignition switch to LOCK (0) to cancel the self-diagnostic function. After completing repair work, run the self-diagnostic function again to make sure that there are no other malfunctions.

(cont'd)

General Troubleshooting Information (cont'd)

Checking for DTCs

NOTE: In the case of multiple problems, the display panel will indicate them all. If the navigation display indicates TR sensor open, TAM sensor open, TS sensor open, TE sensor open, DrVENT sensor open, PaVENT sensor open, and PRE sensor open at the same time, there may be an open in the common ground wire.

DISPLAY

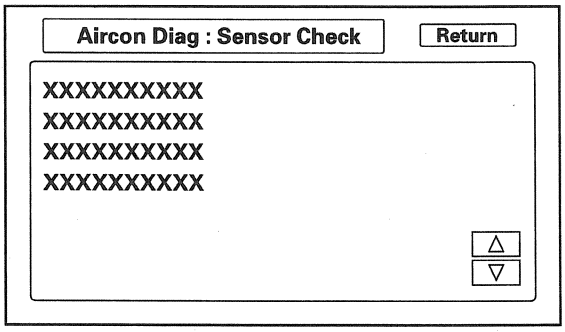

Display	Item
TR sensor open	An open in the in-car temperature sensor circuit (see page 21-34)
TR sensor short	A short in the in-car temperature sensor circuit (see page 21-35)
TAM sensor open	An open in the outside air temperature sensor circuit (see page 21-37)
TAM sensor short	A short in the outside air temperature sensor circuit (see page 21-38)
TS sensor open	An open in the sunlight sensor circuit (see page 21-39)
TS sensor short	A short in the sunlight sensor circuit (see page 21-40)
TE sensor open	An open in the evaporator temperature sensor circuit (see page 21-41)
TE sensor short	A short in the evaporator temperature sensor circuit (see page 21-43)
DrVENT sensor open	An open in the driver's vent air temperature sensor circuit (see page 21-49)
DrVENT sensor short	A short in the driver's vent air temperature sensor circuit (see page 21-50)
PaVENT sensor open	An open in the passenger's vent air temperature sensor circuit (see page 21-51)
PaVENT sensor short	A short in the passenger's vent air temperature sensor circuit (see page 21-53)
PRE sensor open	An open in the A/C pressure sensor circuit (see page 21-54)
PRE sensor short	A short in the A/C pressure sensor circuit (see page 21-55)
Blower motor lock	A problem in the blower motor circuit (see page 21-45)
NAVI communication error	Climate control unit lost communication with navigation unit (see page 21-56)
Audio communication error	Climate control unit lost communication with audio unit (see page 21-60)
BUS communication error	Climate control unit lost communication with each control motor (see page 21-57)
DrA/M motor lock	A problem in the driver's air mix control linkage, door, or motor (see page 21-44)
PaA/M motor lock	A problem in the passenger's air mix control linkage, door, or motor (see page 21-44)
Mode motor lock	A problem in the mode control linkage, doors, or motor (see page 21-45)
R/F motor lock	A problem in the recirculation control linkage, door, or motor (see page 21-58)
DrC/V motor lock	A problem in the driver's cool vent control linkage, door, or motor (see page 21-58)
PaC/V motor lock	A problem in the passenger's cool vent control linkage, door, or motor (see page 21-59)
RrVENT motor lock	A problem in the rear vent control linkage, door, or motor (see page 21-59)
COMP Solenoid error	A problem in the variable capacity control solenoid valve circuit (see page 21-62)
EEPROM error	Climate control unit internal error (see page 21-33)
TW sensor error	Climate control unit lost communication with gauge control module (ECT message) (see page 21-33)
Vehicle speed error	Climate control unit lost communication with gauge control module (VSP/NE message) (see page 21-33)
ENGNe error	

Displaying Sensor Inputs at the Climate Control Unit

The climate control unit has a mode that displays sensor inputs it receives. This mode shows you what the climate control unit is receiving from each of the sensors, one at a time, and it can help you determine if a sensor is faulty.

Check these items before using the sensor input display mode

1. Turn the ignition switch to ON (II), then select AUTO and check the recirculation door function; press the recirculation button to switch from FRESH to RECIRC. The air volume and sound should change slightly.

2. Adjust the temperature control knob to the desired test temperature. When selecting the test temperature, note these items:

   - "Lo" temperature setting will default to MAX COOL, VENT, and RECIRC.
   - "Hi" temperature setting will default to MAX HOT, FLOOR, and FRESH.
   - 58 through 86 ℉ settings will use the automatic climate control logic (USA models).
   - 16 through 28 ℃ settings will use the automatic climate control logic (Canada models).

3. Turn the ignition switch to LOCK (0).

To run the sensor input display mode, follow these steps

4. Press and hold both the AUTO and recirculation buttons while starting the engine. Release the buttons.

5. Turn the ignition switch to ON (II).

6. Press and hold the three buttons (Menu, Map/Guide, and Cancel), and keep them pressed for about 5 seconds. The display screen will go directly to the "Select Diagnosis Items" menu.

7. Use the interface dial to select Self-Diagnosis Mode, then select A/C. The screen will go to Aircon, then select Aircon Diag. The display will show the sensor inputs.

Display Panel	Item	Displayed Value
TR sensor	In-car Temperature	℃
TAM sensor	Outside Air Temperature	℃
TS sensor	Solar Radiation Sensor Value: Dark=00, Flashlight=04, Cloudy=10, Sunny=65	kcal/m^2·min
TW sensor	Engine Coolant Temperature	℃
TE sensor	Evaporator Outlet Air Temperature	℃
DrVENT sensor	Driver's Vent Air Temperature	℃
PaVENT sensor	Passenger's Vent Air Temperature	℃
DrA/M motor	Driver's Air Mix Opening (Low value indicates cooler air distribution, higher value indicates warmer air distribution)	% of opening
PaA/M motor	Passenger's Air Mix Opening (Low value indicates cooler air distribution, higher value indicates warmer air distribution)	% of opening
Mode motor	Mode Opening	% of opening
R/F motor	Recirculation Opening	% of opening
DrC/V sensor	Driver's Cool Vent Opening	% of opening
PaC/V sensor	Passenger's Cool Vent Opening	% of opening
RrVENT motor	Rear Vent Opening	% of opening
TAO	Vent Temperature Air Out (TAO)	℃
VSP	Vehicle Speed (Vehicle must be driven to display speed)	km/h
Pd sensor	A/C pressure	MPa

NOTE:
- The sensor values will be displayed in degrees Celsius (℃). Use the chart to convert the value to degrees Fahrenheit (℉).
- If the sensor value displays "Er" this indicates there is an open or short in the circuit or sensor. Check for DTCs using the HDS, or refer to checking DTCs by DTC indication.
- If necessary, compare the sensor input display to a known-good vehicle under the same test conditions.
- If the sensor is out of the normal range, refer to the sensor test or substitute a known-good sensor, and recheck.

8. To cancel the sensor input display mode, press the AUTO button or turn the ignition switch to LOCK (0).

(cont'd)

General Troubleshooting Information (cont'd)

Celsius to Fahrenheit Conversion Table

℃	℉	℃	℉	℃	℉	℃	℉	℃	℉
0	32	10	50	20	68	30	86	40	104
1	34	11	52	21	70	31	88	41	106
2	36	12	54	22	72	32	90	42	108
3	37	13	55	23	73	33	91	43	109
4	39	14	57	24	75	34	93	44	111
5	41	15	59	25	77	35	95	45	113
6	43	16	61	26	79	36	97	46	115
7	45	17	63	27	81	37	99	47	117
8	46	18	64	28	82	38	100	48	118
9	48	19	66	29	84	39	102	49	120

℃	℉	℃	℉	℃	℉	℃	℉	℃	℉
50	122	60	140	70	158	80	176	90	194
51	124	61	142	71	160	81	178	91	196
52	126	62	144	72	162	82	180	92	198
53	127	63	145	73	163	83	181	93	199
54	128	64	147	74	165	84	183	94	201
55	131	65	149	75	167	85	185	95	203
56	133	66	151	76	169	86	187	96	205
57	135	67	152	77	170	87	188	97	207
58	136	68	154	78	172	88	190	98	208
59	139	69	158	79	174	89	192	99	210

DTC Troubleshooting Index

Checking the DTCs by HDS

DTC	Detection Item or Symptom	ECU	DTC type	Page
B1200	Communication bus line error	Climate control unit	Loss of communication	(see page 22-148)
B1202	Climate control unit internal error	Climate control unit	Internal error	(see page 21-33)
B1205	Climate control unit lost communication with gauge control module (VSP/NE message)	Climate control unit	Loss of communication	(see page 21-33)
B1206	Climate control unit lost communication with gauge control module (ECT message)	Climate control unit	Loss of communication	(see page 21-33)
B1207	Climate control unit lost communication with gauge control module (ILLUMI message)	Climate control unit	Loss of communication	(see page 21-33)
B1208	Climate control unit lost communication with keyless access control unit (FOB ID message)	Climate control unit	Loss of communication	(see page 21-33)
B1225	An open in the in-car temperature sensor circuit	Climate control unit	Signal error	(see page 21-34)
B1226	A short in the in-car temperature sensor circuit	Climate control unit	Signal error	(see page 21-35)
B1227	An open in the outside air temperature sensor circuit	Climate control unit	Signal error	(see page 21-37)
B1228	A short in the outside air temperature sensor circuit	Climate control unit	Signal error	(see page 21-38)
B1229	An open in the sunlight sensor circuit	Climate control unit	Signal error	(see page 21-39)
B1230	A short in the sunlight sensor circuit	Climate control unit	Signal error	(see page 21-40)
B1231	An open in the evaporator temperature sensor circuit	Climate control unit	Signal error	(see page 21-41)
B1232	A short in the evaporator temperature sensor circuit	Climate control unit	Signal error	(see page 21-43)
B1235	A problem in the driver's air mix control linkage, door, or motor	Climate control unit	Signal error	(see page 21-44)
B1238	A problem in the passenger's air mix control linkage, door, or motor	Climate control unit	Signal error	(see page 21-44)
B1240	A problem in the mode control linkage, doors, or motor	Climate control unit	Signal error	(see page 21-45)
B1241	A problem in the blower motor circuit	Climate control unit	Signal error	(see page 21-45)
B2975	An open in the driver's vent air temperature sensor circuit	Climate control unit	Signal error	(see page 21-49)
B2976	A short in the driver's vent air temperature sensor circuit	Climate control unit	Signal error	(see page 21-50)
B2977	An open in the passenger's vent air temperature sensor circuit	Climate control unit	Signal error	(see page 21-51)
B2978	A short in the passenger's vent air temperature sensor circuit	Climate control unit	Signal error	(see page 21-53)
B2979	An open in the A/C pressure sensor circuit	Climate control unit	Signal error	(see page 21-54)

(cont'd)

DTC Troubleshooting Index (cont'd)

Checking the DTCs by HDS

DTC	Detection Item or Symptom	ECU	DTC type	Page
B2980	A short in the A/C pressure sensor circuit	Climate control unit	Signal error	(see page 21-55)
B2981	Climate control unit lost communication with navigation unit	Climate control unit	Loss of communication	(see page 21-56)
B2982	Climate control unit lost communication with each control motor	Climate control unit	Loss of communication	(see page 21-57)
B2983	A problem in the recirculation control linkage, door, or motor	Climate control unit	Signal error	(see page 21-58)
B2984	A problem in the driver's cool vent control linkage, door, or motor	Climate control unit	Signal error	(see page 21-58)
B2985	A problem in the passenger's cool vent control linkage, door, or motor	Climate control unit	Signal error	(see page 21-59)
B2987	A problem in the rear vent control linkage, door, or motor	Climate control unit	Signal error	(see page 21-59)
B2991	Climate control unit lost communication with audio unit	Climate control unit	Loss of communication	(see page 21-60)

Symptom Troubleshooting Index

Symptom	Diagnostic procedure	Also check for
All the control motors do not run	• Probable cause: The control motor circuit malfunction • Do the control motor power supply circuit troubleshooting (see page 21-64)	• HVAC DTCs (see page 21-10) • Blown fuse No. 9 (7.5 A) in the passenger's under-dash fuse/relay box • Poor or loose connections at the terminals
The aspirator fan does not run	• Probable cause: The aspirator fan circuit malfunction • Do the aspirator fan circuit troubleshooting (see page 21-65)	• HVAC DTCs (see page 21-10) • Blown fuse No. 30 (7.5 A) in the driver's under-dash fuse/relay box • Poor ground at G501 (see page 22-32) • Poor or loose connections at the terminals
The blower and heater controls and the A/C system do not work	• Probable cause: The climate control unit has malfunctioned, or has lost power or ground • Do the climate control power and ground circuit troubleshooting (see page 21-66)	• HVAC DTCs (see page 21-10) • Blown fuse No. 30 (7.5 A) in the driver's under-dash fuse/relay box • Poor ground at G503 (see page 22-36) • Poor or loose connections at the terminals
The A/C condenser fan and/or the radiator fan do not run with the A/C on	Do the radiator and A/C condenser fans common circuit troubleshooting (see page 10-20)	• Powertrain DTCs (see page 11-3) • Blown fuse No. 23 (7.5 A) in the driver's under-dash fuse/relay box • Faulty radiator fan control (RFC) unit relay • Faulty radiator fan control (RFC) unit • Poor ground at G301 (see page 22-26) • Poor or loose connections at the terminals
The A/C condenser fan does not run at all (but the radiator fan and the A/C compressor run with the A/C on)	Do the A/C condenser fan circuit troubleshooting (see page 10-21)	• Powertrain DTCs (see page 11-3) • Faulty A/C condenser fan motor • Faulty radiator fan control (RFC) unit • Poor or loose connections at the terminals
The radiator fan does not run at all (but the A/C condenser fan and the A/C compressor run with the A/C on)	Do the radiator fan circuit troubleshooting (see page 10-20)	• Powertrain DTCs (see page 11-3) • Faulty radiator fan motor • Faulty radiator fan control (RFC) unit • Poor or loose connections at the terminals

(cont'd)

Symptom Troubleshooting Index (cont'd)

Symptom	Diagnostic procedure	Also check for
The blower fan runs slower than expected in cold weather (when in AUTO mode) NOTE: It is normal for the blower fan to run slowly until the coolant temperature rises when in AUTO mode	• Probable cause: Engine coolant temperature (ECT) circuit malfunction • Troubleshoot ECT 2 circuit performance problem (see page 11-162)	• HVAC DTCs (see page 21-10) • Powertrain DTCs (see page 11-3) • Manual blower motor operation
The A/C compressor clutch cycles rapidly on and off	• Probable cause: A/C system is very low on refrigerant, indicating a possible leak • Do the refrigerant leak check (see page 21-103) and repair any leaks. Replace the receiver/dryer (see page 21-99), then recharge the system to specifications (see page 21-102)	• HVAC DTCs (see page 21-10) • If there is no leak and the refrigerant level is normal, do the A/C compressor clutch circuit troubleshooting (see page 21-67), and look for an intermittent problem.
The A/C compressor clutch does not disengage when the A/C switch is off	• Probable cause: The A/C compressor clutch circuit is on (energized) continuously, shorted to ground, or the compressor clutch is mechanically jammed – Do the A/C compressor clutch circuit troubleshooting (see page 21-67), and repair any circuit problems – If the A/C compressor clutch circuit is OK, then do the A/C compressor clutch check (see page 21-94), and repair any problems with the compressor clutch	The A/C compressor relief valve. If it has vented refrigerant to the atmosphere, correct the problem with the compressor clutch or clutch circuit, then replace the relief valve (see page 21-97).
The A/C compressor relief valve has vented refrigerant NOTE: This indicates the A/C system pressure was very high	• Probable cause: A high-side restriction, the A/C condenser/radiator fans are inoperative, or the A/C compressor clutch is not disengaging – If the fans and compressor clutch operate normally, recover refrigerant (see page 21-100), and check for restrictions – If the compressor clutch will not disengage, troubleshoot the clutch circuit (see page 21-67), and check for mechanical problems (see page 21-94) – If the fans are inoperative, troubleshoot the fan circuits (see page 10-21)	Powertrain DTCs (see page 11-3)
Warm air comes out of the vents, and the high pressure liquid line is very hot	• Probable cause: The A/C system is overcharged (too much refrigerant), or the condenser is malfunctioning • Recover A/C refrigerant (see page 21-100), then check the condenser for restrictions or poor airflow. Repair as needed. Recharge the system to specifications (see page 21-102)	• Incorrect tension or abnormal wear on the drive belt. Replace the belt and/or the belt tensioner as needed. • Proper operation of the condenser/radiator fans. Repair as needed. • Signs of an overheated engine. Repair as needed.
Warm air comes out of the vents. The suction line is cool to warm, and the discharge line is warm to hot	• Probable cause: The A/C system is low on refrigerant, indicating a possible leak • Do the refrigerant leak check (see page 21-103) and repair any leaks. Recharge the system to specifications (see page 21-102)	• HVAC DTCs (see page 21-10) • Add refrigerant oil depending on the part you replaced (see page 21-6)
Warm air comes out of the vents. The suction line is cool to warm, the discharge line is warm to hot, and there is no frost on the expansion valve	• Probable cause: Excessive air and/or moisture in the system, indicating a possible leak • Do the refrigerant leak check (see page 21-103) and repair any leaks. Replace the receiver/dryer (see page 21-99), then recharge the system to specifications (see page 21-102)	• HVAC DTCs (see page 21-10) • Check the amount of refrigerant oil in the system. Adjust the oil level as needed.

Symptom	Diagnostic procedure	Also check for
Warm air comes out of the vents. The liquid line or the condenser outlet is abnormally cool, or there is frost or condensation on the receiver/dryer	• Probable cause: A restriction in the high-pressure side of the system • Recover A/C refrigerant (see page 21-100), then check the liquid line, the receiver/dryer, and the condenser for restrictions. Repair as needed. Recharge the system to specifications (see page 21-102)	HVAC DTCs (see page 21-10)
There is heavy frost or condensation on the expansion valve, and frost on the suction line	• Probable cause: A restriction in the low-pressure side of the system • Recover A/C refrigerant (see page 21-100), then check the suction line and the expansion valve for restrictions. Repair as needed. Recharge the system to specifications (see page 21-102)	HVAC DTCs (see page 21-10)
Warm air comes out of the vents, and there is frost on the expansion valve	• Probable cause: The expansion valve is stuck closed • Replace the expansion valve (see page 21-88)	• HVAC DTCs (see page 21-10) • Check the old expansion valve for contamination. If contaminants are found, replace the A/C system component that caused the contamination.
The temperature of the liquid line is the same on both sides of the expansion valve, and the evaporator coil or suction line has heavy condensation	• Probable cause: The expansion valve is stuck open • Replace the expansion valve (see page 21-88)	• HVAC DTCs (see page 21-10) • Check the old expansion valve for contamination. If contaminants are found, replace the A/C system component that caused the contamination.
Warm air comes out of the vents, but A/C command is normal (A/C switch and clutch are on)	• Probable cause: Compressor failure • Do the A/C system test (see page 21-109), and correct any problems. If necessary, replace the compressor (see page 21-93)	• HVAC DTCs (see page 21-10) • Add refrigerant oil depending on the part you replaced (see page 21-6)
HDS does not communicate with the climate control unit or the vehicle	Troubleshoot the DLC circuit (see page 11-211)	
Insufficient heating	1. Check the coolant level (see page 10-6) 2. Check the radiator cap (see page 10-3) 3. Check the coolant temperature during normal operation 4. Check the heater core inlet hose temperature: • If it is COLD, check for restrictions in the hose, a damaged or leaking thermostat, or a damaged or leaking water pump, an operation of the heater valve • If it is HOT, check for restrictions in the heater core. Back flush or replace the heater core 5. Check the operation of the air mix doors: • Driver's (see page 21-77) • Passenger's (see page 21-78) 6. Check the blower motor unit for obstructions 7. Check for air leaks around the ducts and vents	• HVAC DTCs (see page 21-10) • Damaged cylinder head gasket

System Description

The air conditioning (A/C) system removes heat from the passenger compartment by transferring heat from the ambient air to the evaporator. The A/C refrigerant expands in the evaporator, and the evaporator becomes very cold and absorbs the heat from the ambient air. The blower fan pushes air across the evaporator where the heat is absorbed, and then it blows the cool air into the passenger compartment.

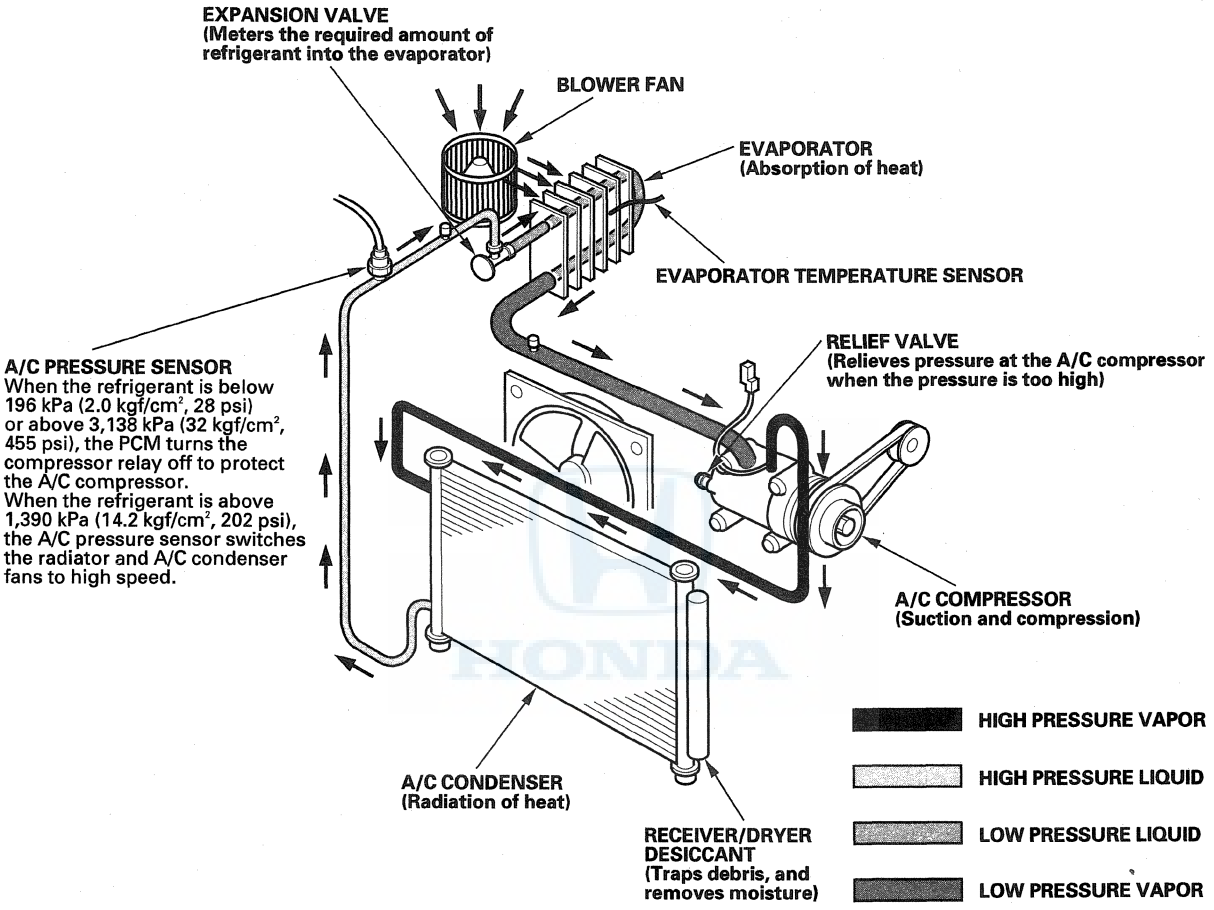

This vehicle uses HFC-134a (R-134a) refrigerant, which does not contain chlorofluorocarbons. Pay attention to the following service items:

- Do not mix refrigerants CFC-12 (R-12) and HFC-134a (R-134a). They are not compatible.
- Use only the recommended polyalkyleneglycol (PAG) refrigerant oil (DENSO ND-OIL 8) designed for the R-134a A/C compressor. Intermixing the recommended (PAG) refrigerant oil with any other refrigerant oil will result in A/C compressor failure.
- All A/C system parts (A/C compressor, discharge line, suction line, evaporator, A/C condenser, receiver/dryer, expansion valve, O-rings for joints) are designed for refrigerant R-134a. Do not exchange with R-12 parts.
- Use a halogen gas leak detector designed for refrigerant R-134a.
- R-12 and R-134a refrigerant servicing equipment are not interchangeable. Use only a recovery/recycling/charging station that is U.L.-listed and is certified to meet the requirements of SAE J2210 to service the R-134a air conditioning systems.
- Always recover refrigerant R-134a with an approved recovery/recycling/charging station before disconnecting any A/C fitting.

A/C Pressure Sensor

The A/C pressure sensor converts A/C pressure into electrical signals to the PCM.

A/C System Pressure*	Sensor Output Voltage (V out)	System Operation
Abnormally low pressure: Below 196 kPa (2.0 kgf/cm², 28 psi)	Below 0.685 V	The PCM disengages the compressor clutch. The radiator and condenser fans operate based on engine coolant temperature.
Normal operating pressure: • Above 196 kPa (2.0 kgf/cm², 28 psi) • Below 1,470 kPa (15.0 kgf/cm², 213 psi)	0.686 V to 1.944 V	The PCM cycles the compressor clutch based on cooling demand. The radiator and condenser fans operate at low speed unless the engine coolant temperature exceeds 206 °F (97 °C)
High operating pressure: • Above 1,470 kPa (15.0 kgf/cm², 213 psi) • Below 3,138 kPa (32 kgf/cm², 455 psi)	1.945 V to 4.575 V	The PCM cycles the compressor clutch based on cooling demand. The radiator and condenser fans operate at high speed.
Abnormally high pressure: More than 3,138 kPa (32 kgf/cm², 455 psi)	Above 4.575 V	The PCM disengages the compressor clutch. The radiator and condenser fans operate based on engine coolant temperature.

*: The A/C system pressure can be monitored through the climate control sensor input display function (see page 21-15).

The response of the A/C pressure sensor is shown in the graph.

NOTE: When the refrigerant is below 196 kPa (2.0 kgf/cm², 28 psi) or above 3,138 kPa (32 kgf/cm², 455 psi), the PCM turns the compressor relay off to protect the A/C compressor. When the refrigerant pressure is above 1,390 kPa (14.2 kgf/cm², 202 psi), the PCM switches the radiator and A/C condenser fans to high speed.

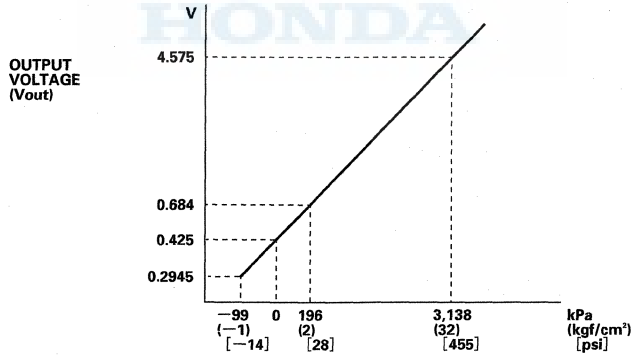

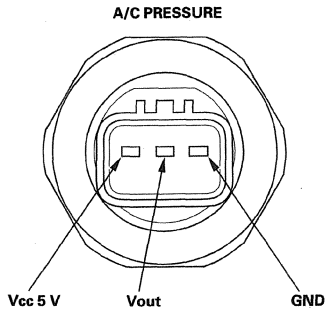

(cont'd)

System Description (cont'd)

Continuously Variable Capacity Compressor

When the shaft rotates, the slope plate rotates by means of the lug plate which is attached to the shaft. The rotational movement of the slope plate is converted through the use of shoes to the reciprocal movement of the pistons, which in turn take in, compress, and discharge the refrigerant.

The inner pressure of the slope plate chamber is controlled between low to mid range, and the pressure determines the slope angle, determining the piston stroke as well and further controlling the discharge amount, resulting in the continuously variable capacity.

The amperage to the variable capacity control solenoid valve is controlled to obtain continuously variable low pressure, further achieving the continuous control of variable compressor capacity resulting in the continuous control of the cooling capacity.

On/Off of the compressor clutch is eliminated in the system, hence no shock of the clutch engaging/disengaging, and the idle speed becomes stable.

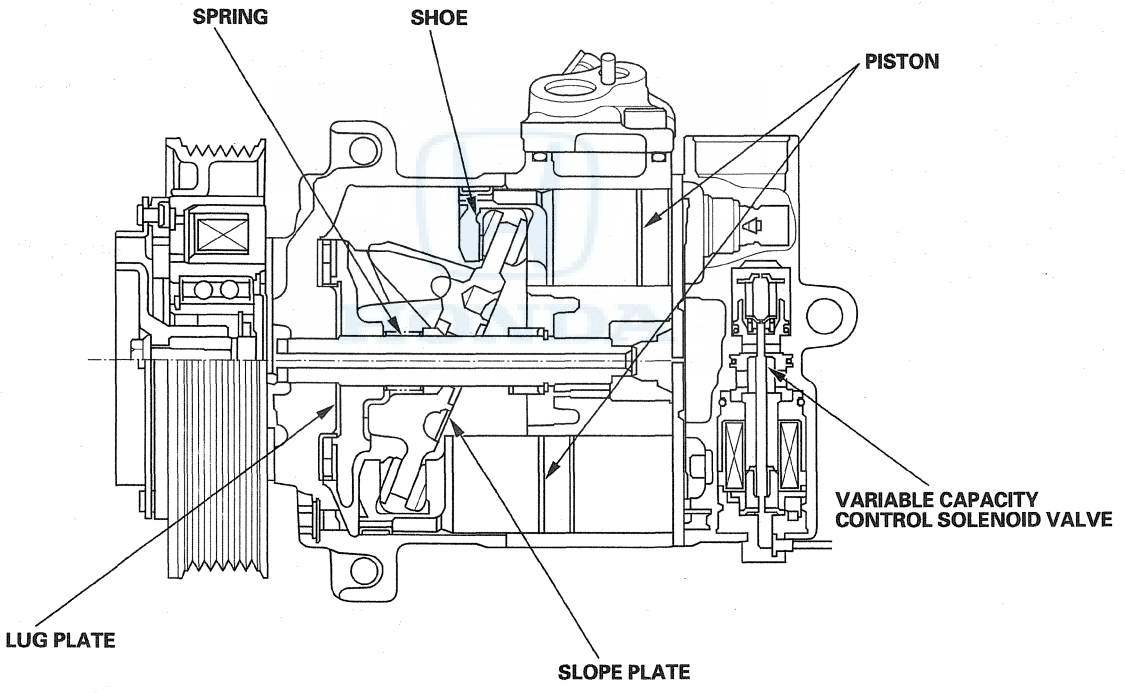

Climate Control Door Positions

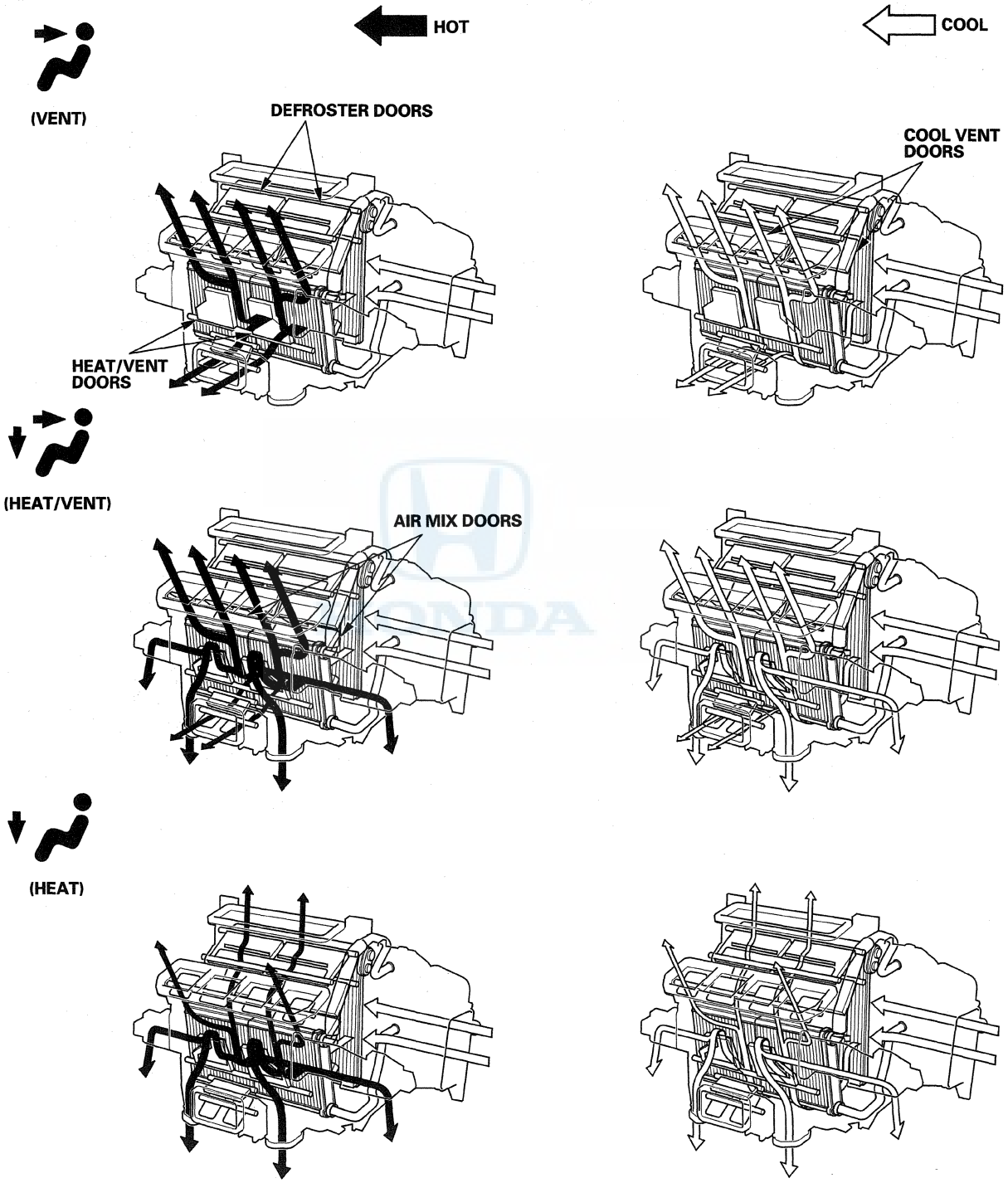

(cont'd)

System Description (cont'd)

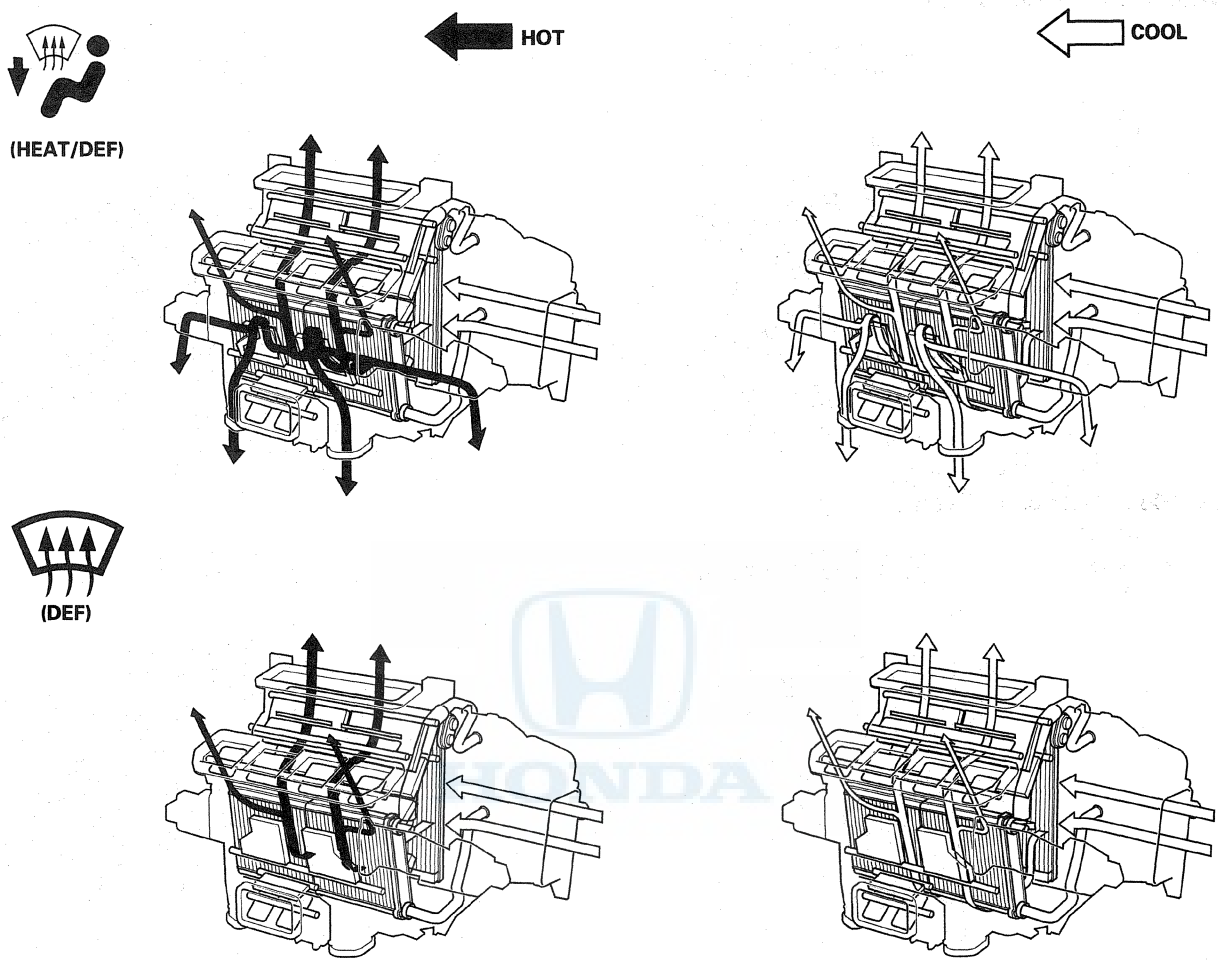

Dual Air Mix Control System

Driver's side: HOT
Passenger's side: COOL

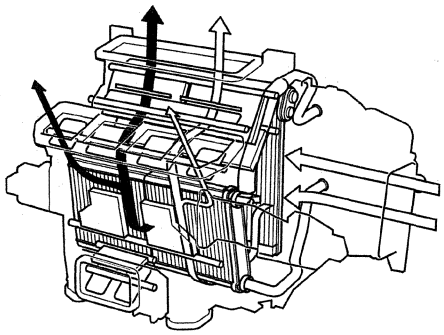

Driver's side: COOL
Passenger's side: HOT

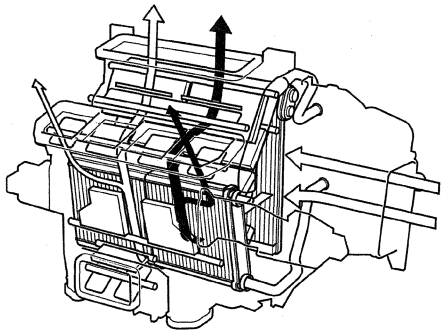

Dual Cool Vent Control System

Driver's side:
VENT/COOL, HEAT/HOT

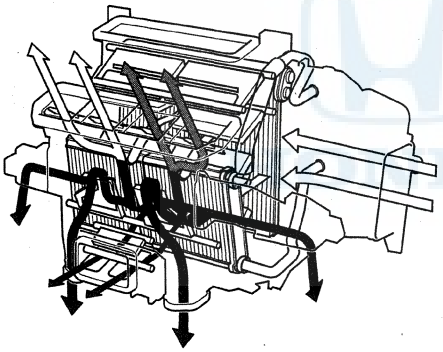

Passenger's side:
VENT/COOL, HEAT/HOT

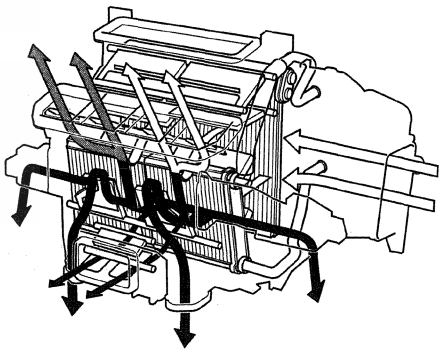

(cont'd)

System Description (cont'd)

i-Dual Climate Control System

This system automatically controls the temperature and the vent mode of the air direction to the driver and passenger's side depending on the angle of the sun and the direction of the vehicle. It calculates information such as date, time, longitude, and latitude from the navigation system, as well as the radiant strength of the sun from the sunlight sensor, to determine the appropriate mode position and temperature to be directed to each side.

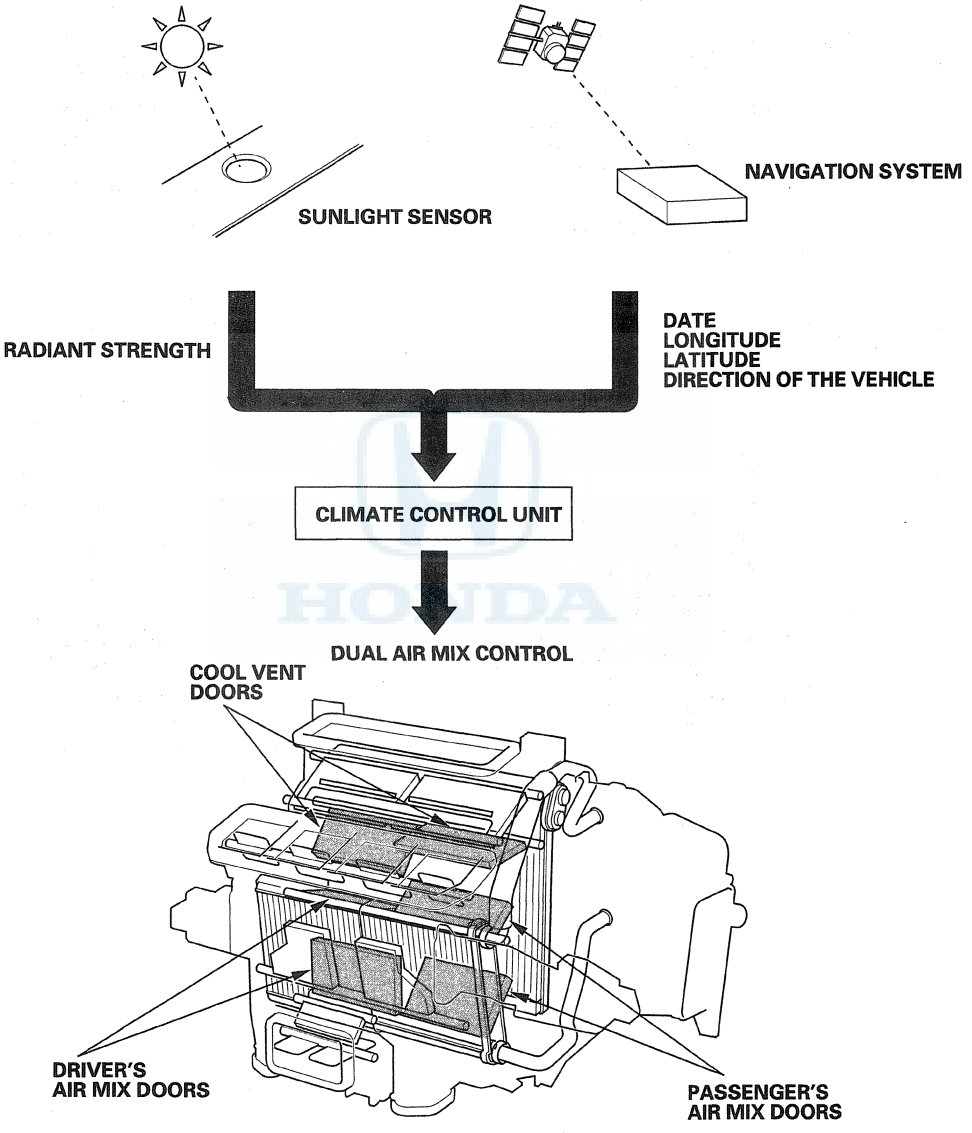

In the event that the navigation system malfunctions, or when driving in areas where the navigation cannot determine the vehicle position (non-coverage areas, tunnels, etc.), the climate control system will operate the same as a vehicle without navigation.

Climate Control Unit Inputs and Outputs

CLIMATE CONTROL UNIT 40P CONNECTOR

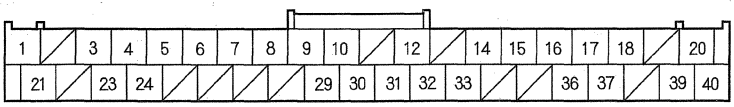

Wire side of female terminals

Cavity	Wire color	Terminal name	Description	Signal
1	LT BLU	Illumination (+)	Input voltage for illumination	With headlight switch ON: battery voltage
3	WHT	Variable Capacity Control Solenoid Valve In	Ground for variable capacity control solenoid valve	Less than 0.5 V at all times
4	GRN	Variable Capacity Control Solenoid Valve Out	Outputs 12 V to variable capacity control solenoid valve	Variable voltage based on cooling load. Battery voltage with compressor at maximum
5	GRY	Control Motor Relay	Switches control motor relay	With control motor relay OFF: battery voltage With control motor relay switched ON: Less than 0.5 V
6	PUR	Navigation Unit (SO)	Communication signal from navigation	With ignition switch ON (II): pulses (about 2.5 V)
7	ORN	Navigation Unit (SI)	Communication signal from navigation	With ignition switch ON (II): pulses (about 2.5 V)
8	BRN	Navigation Unit (CLK)	Communication signal from navigation	With ignition switch ON (II): pulses (about 2.5 V)
9	BLU	Blower Feedback	Feedback signal from blower power resistor	With ignition switch ON (II) and blower ON: between 5 V and 12 V. Voltage decreases as blower speed increases
10	RED	Blower Transistor Control	Outputs blower power resistor gate voltage	With ignition switch ON (II) and blower OFF: 0 V. Voltage increases as blower speed increases
12	GRY	A/C Pressure Sensor 5 V	Outputs 5 V to pressure sensor	With climate control unit ON: about 5.0 V
14	LT GRN	A/C Pressure Sensor	Detects A/C pressure sensor signal	With climate control unit ON: about 0.4—4.6 V, depending upon refrigerant pressure
15	LT BLU	In-car Temperature Sensor	Detects in-car temperature sensor signal	With ignition switch ON (II): about 1.0—4.0 V (depending on in-car temperature).
16	PNK	Outside Air Temperature Sensor	Detects outside air temperature sensor signal	With ignition switch ON (II): about 1.0—4.0 V (depending on outside air temperature).
17	BRN	Evaporator Temperature Sensor	Detects evaporator temperature sensor signal	With ignition switch ON (II): about 1.0—4.0 V (depending on evaporator temperature).
18	PUR	Sunlight Sensor	Detects sunlight sensor signal	With ignition switch ON (II) and sensor out of direct sunlight: 3.6 V or more With ignition switch ON (II) and sensor in direct sunlight: 3.5 V or less
20	YEL	IG2	IG2 Power supply	With ignition switch ON (II): battery voltage
21	GRN	Illumination (−)	Detects illumination control signal	With headlight switch ON: voltage varies as dash lights brightness varies
23	LT GRN	M-COM	Communication signal from climate control motors	With ignition switch ON (II): pulses (about 2.5 V)
24	LT GRN	B-CAN	B-CAN communication signal	With ignition switch ON (II): pulses (about 2.5 V)
29	YEL	Audio Unit (SO)	Communication signal from audio unit	With ignition switch ON (II): pulses (about 2.5 V)
30	RED	Audio Unit (Clock)	Communication signal from audio unit	With ignition switch ON (II): pulses (about 2.5 V)
31	BLK	Ground for climate control unit (G503)	Ground for control unit	Less than 0.5 V at all times
32	PNK	Control motor ground	Common ground for climate control motors	Less than 0.5 V at all times
33	ORN	Sensor ground	Common ground for sensors	Less than 0.5 V at all times
36	WHT	Driver's Air Vent Temperature Sensor	Detects driver's air vent temperature sensor signal	With ignition switch ON (II): about 1.0—4.0 V (depending driver's air vent temperature).
37	LT BLU	Passenger's Air Vent Temperature Sensor	Detects passenger's air vent temperature sensor signal	With ignition switch ON (II): about 1.0—4.0 V (depending passenger's air vent temperature).
39	PUR	Control Motor Relay	Inputs 12 V from control motor relay	With control motor relay OFF: about 0 V With control motor relay ON: battery voltage
40	GRN	Control Motor Power	Outputs 12 V to climate control motors	With control motor relay OFF: about 0 V With control motor relay ON: battery voltage

Circuit Diagram

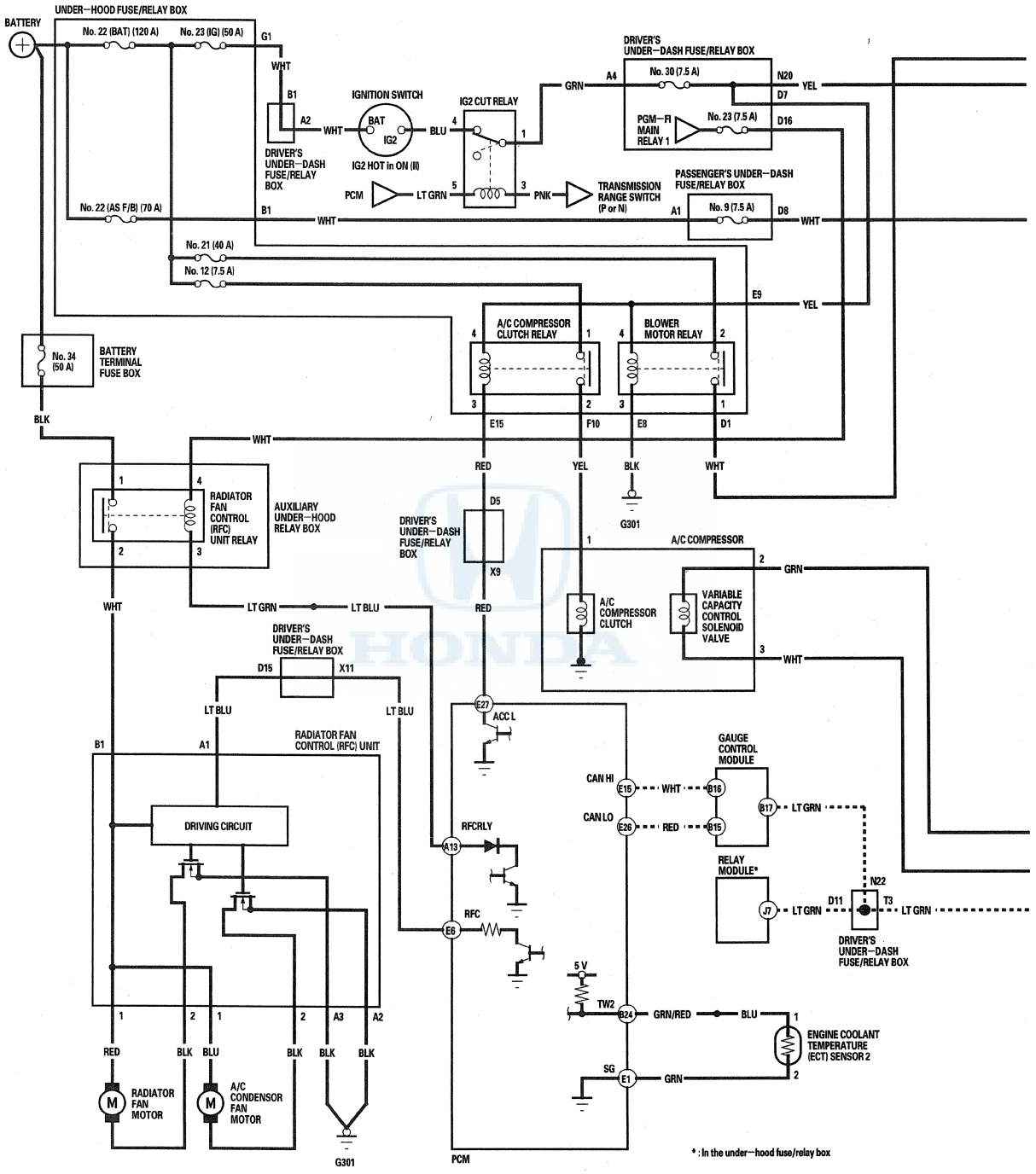

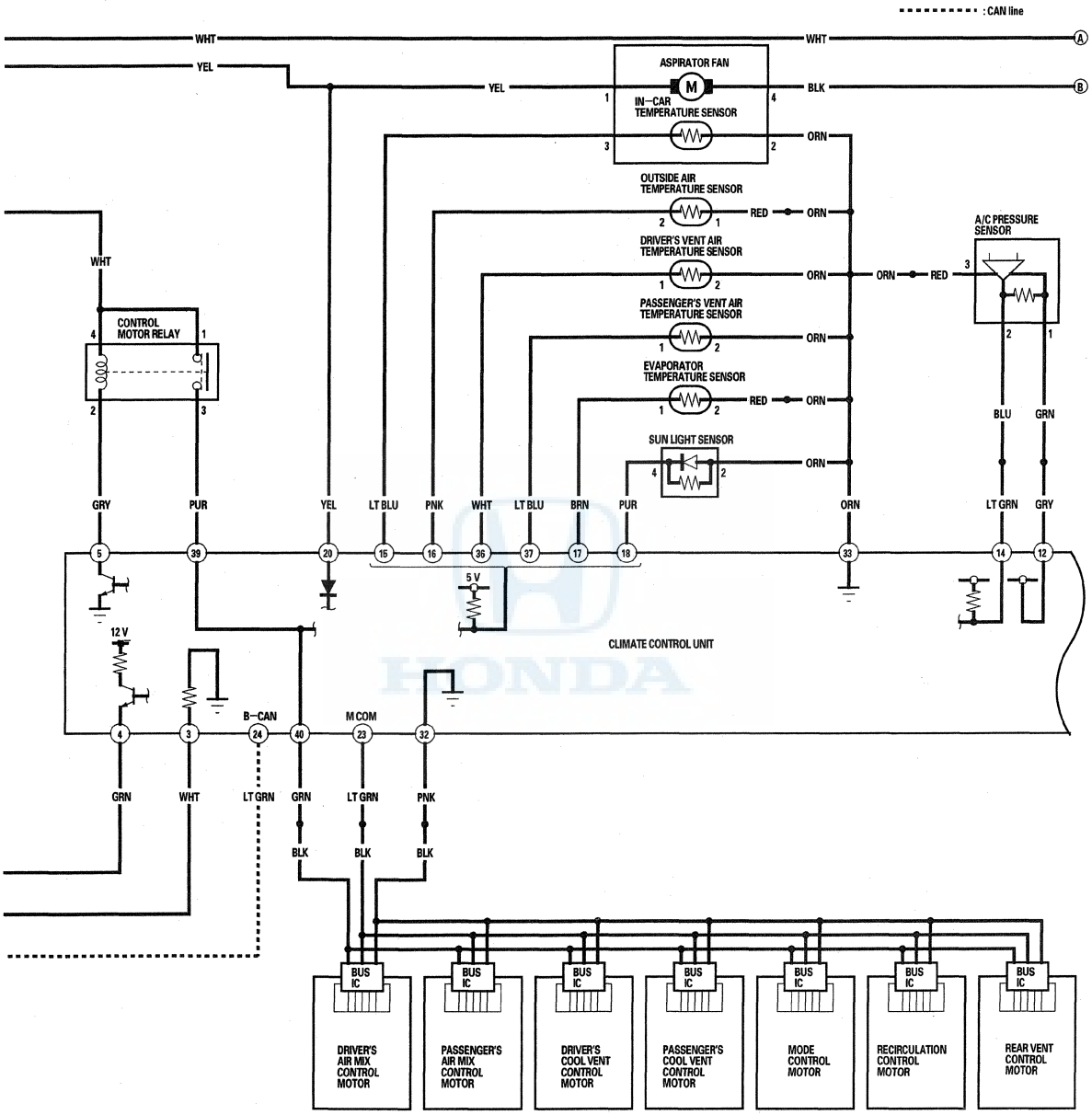
: CAN line
WHT
YEL
ASPIRATOR FAN
M
IN–CAR TEMPERATURE SENSOR
BLK
ORN
OUTSIDE AIR TEMPERATURE SENSOR
RED
DRIVER'S VENT AIR TEMPERATURE SENSOR
PASSENGER'S VENT AIR TEMPERATURE SENSOR
EVAPORATOR TEMPERATURE SENSOR
SUN LIGHT SENSOR
A/C PRESSURE SENSOR
CONTROL MOTOR RELAY
BLU
GRN
GRY
PUR
LT BLU
PNK
BRN
LT GRN
5 V
12 V
CLIMATE CONTROL UNIT
B–CAN
M COM
BUS IC
DRIVER'S AIR MIX CONTROL MOTOR
PASSENGER'S AIR MIX CONTROL MOTOR
DRIVER'S COOL VENT CONTROL MOTOR
PASSENGER'S COOL VENT CONTROL MOTOR
MODE CONTROL MOTOR
RECIRCULATION CONTROL MOTOR
REAR VENT CONTROL MOTOR

(cont'd)

Circuit Diagram (cont'd)

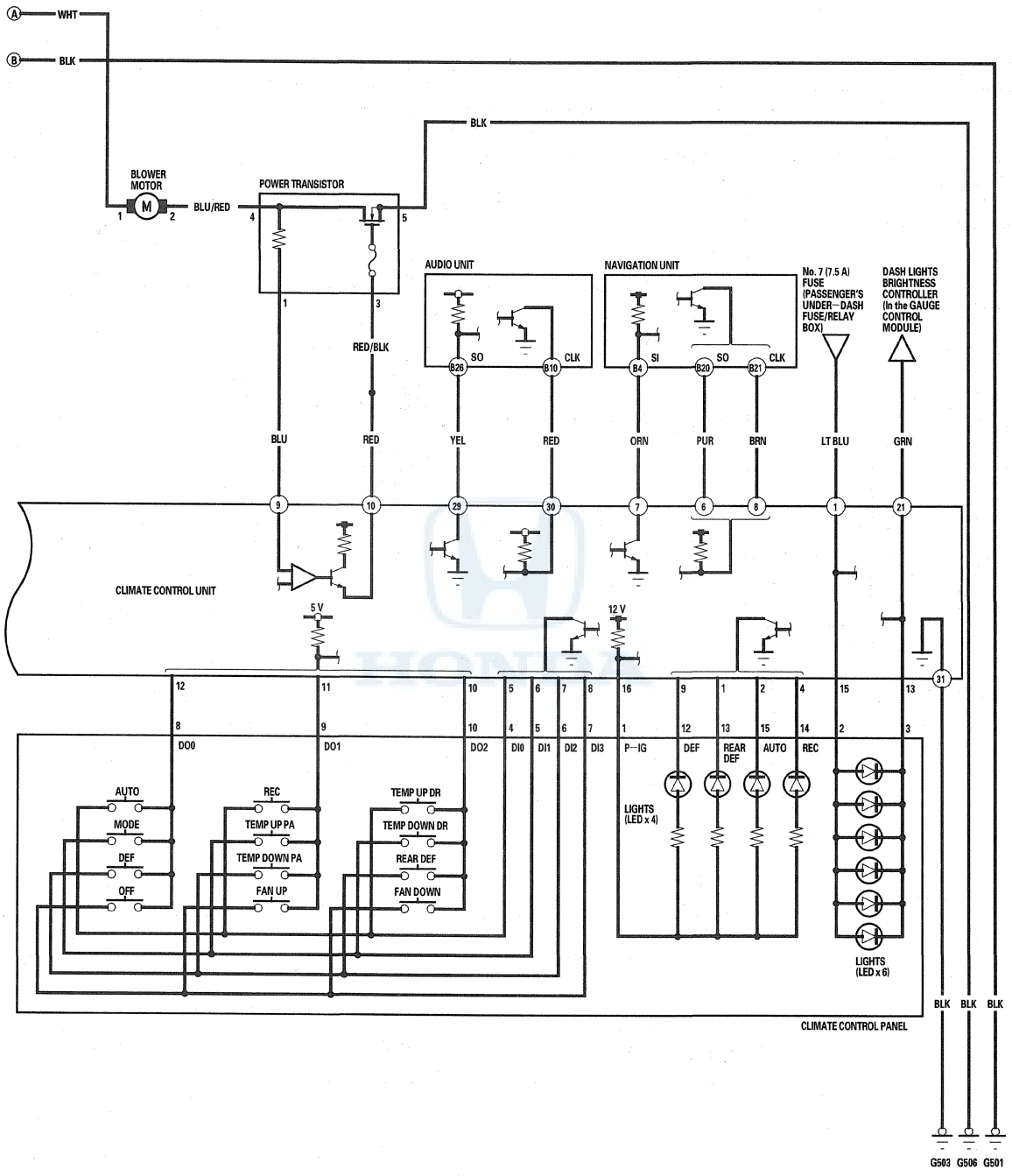

DTC Troubleshooting

DTC B1202 or EEPROM error is indicated: Climate Control Unit Internal Error

NOTE:
- Check the battery condition (see page 22-90) and the charging system (see page 4-30).
- If you are troubleshooting multiple DTCs, be sure to follow the instructions in B-CAN system diagnosis test mode A (see page 22-131).

1. Clear the DTC with the HDS.
2. Turn the ignition switch to LOCK (0), and then back to ON (II).
3. Wait for 6 seconds or more.
4. Do the self-diagnostic with the HDS (see page 21-11) or the climate control unit (see page 21-12).
5. Check for DTCs.

   Is DTC B1202 or EEPROM error indicated?

   YES—The climate control unit is faulty, replace the climate control unit. ■

   NO—Intermittent failure. The climate control unit is OK at this time. Check for loose connections at the climate control unit 40P connector. ■

DTC B1205 or Vehicle speed error or ENGNe error is indicated: Climate Control Unit Lost Communication with Gauge Control Module (VSP/NE message)

DTC B1206 or TW sensor error is indicated: Climate Control Unit Lost Communication with Gauge Control Module (ECT message)

DTC B1207: Climate Control Unit Lost Communication with Gauge Control Module (ILLUMI message)

DTC B1208: Climate Control Unit Lost Communication with Keyless Access Control Unit (FOB ID message)

NOTE: If you are troubleshooting multiple DTCs, be sure to follow the instructions in B-CAN system diagnosis test mode A (see page 22-131).

1. Clear the DTC with the HDS.
2. Turn the ignition switch to LOCK (0), and then back to ON (II).
3. Wait for 6 seconds or more.
4. Do the self-diagnostic with the HDS (see page 21-11) or the climate control unit (see page 21-12).
5. Check for DTCs.

   Is DTC B1205 or Vehicle speed error/ENGNe error, and/or B1206 or TW sensor error, and/or B1207, and/or B1208 indicated?

   YES—Go to step 6.

   NO—Intermittent failure. Check for loose wires or poor connections on the B-CAN lines between the gauge control module circuit. ■

6. Clear for DTC using the HDS.

   Is DTC B1011, B1060, B1408, B1610, B1805 and/or B2160, and/or B1207 indicated?

   YES—Go to the gauge control module input test (see page 22-155). ■

   NO—The climate control unit is faulty, replace the climate control unit. ■

DTC Troubleshooting (cont'd)

DTC B1225 or TR sensor open is indicated:
An Open in the In-car Temperature Sensor Circuit

1. Clear the DTC with the HDS.
2. Turn the ignition switch to LOCK (0), and then back to ON (II).
3. Do the self-diagnostic with the HDS (see page 21-11) or the climate control unit (see page 21-12).
4. Check for DTCs.

   Is DTC B1225 or TR sensor open indicated?

   YES—Go to step 5.

   NO—Intermittent failure. Check for loose wires or poor connections on the in-car temperature sensor circuit. ■
5. Turn the ignition switch to LOCK (0).
6. Remove the in-car temperature sensor (see page 21-71) and test it (see page 21-71).

   Is the in-car temperature sensor OK?

   YES—Go to step 7.

   NO—Replace the in-car temperature sensor. ■
7. Disconnect the climate control unit 40P connector.
8. Check for continuity between climate control unit 40P connector terminal No. 15 and in-car temperature sensor 4P connector terminal No. 3.

CLIMATE CONTROL UNIT 40P CONNECTOR
Wire side of female terminals

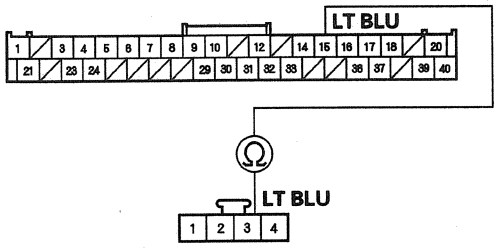

IN-CAR TEMPERATURE SENSOR 4P CONNECTOR
Wire side of female terminals

Is there continuity?

YES—Go to step 9.

NO—Repair an open in the wire between the climate control unit and the in-car temperature sensor. ■

9. Check for continuity between climate control unit 40P connector terminal No. 33 and in-car temperature sensor 4P connector terminal No. 2.

CLIMATE CONTROL UNIT 40P CONNECTOR
Wire side of female terminals

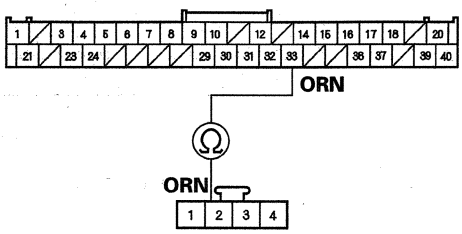

IN-CAR TEMPERATURE SENSOR 4P CONNECTOR
Wire side of female terminals

Is there continuity?

YES—Check for loose wires or poor connections at the climate control unit 40P connector and at the in-car temperature sensor 4P connector. If the connections are good, substitute a known-good climate control unit, and recheck. If the symptom/indication goes away, replace the original climate control unit. ■

NO—Repair an open in the wire between the climate control unit and the in-car temperature sensor. ■

DTC B1226 or TR sensor short is indicated: A Short in the In-car Temperature Sensor Circuit

1. Clear the DTC with the HDS.
2. Turn the ignition switch to LOCK (0), and then back to ON (II).
3. Do the self-diagnostic with the HDS (see page 21-11) or the climate control unit (see page 21-12).
4. Check for DTCs.

   Is DTC B1226 or TR sensor short indicated?

   YES—Go to step 5.

   NO—Intermittent failure. Check for loose wires or poor connections on the in-car temperature sensor circuit. ■
5. Turn the ignition switch to LOCK (0).
6. Remove the in-car temperature sensor (see page 21-71) and test it (see page 21-71).

   Is the in-car temperature sensor OK?

   YES—Go to step 7.

   NO—Replace the in-car temperature sensor. ■
7. Disconnect the climate control unit 40P connector.

(cont'd)

DTC Troubleshooting (cont'd)

8. Check for continuity between body ground and climate control unit 40P connector terminal No. 15.

CLIMATE CONTROL UNIT 40P CONNECTOR

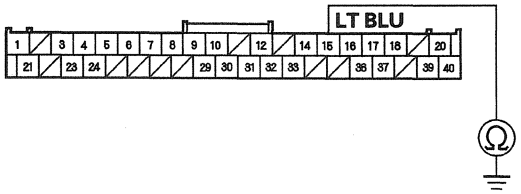

Wire side of female terminals

Is there continuity?

YES—Repair a short to body ground in the wire between the climate control unit and the in-car temperature sensor. ■

NO—Go to step 9.

9. Check for continuity between climate control unit 40P connector terminals No. 15 and No. 33.

CLIMATE CONTROL UNIT 40P CONNECTOR

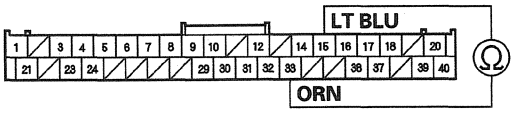

Wire side of female terminals

Is there continuity?

YES—Repair a short in the wires between the climate control unit and the in-car temperature sensor. ■

NO—Substitute a known-good climate control unit, and recheck. If the symptom/indication goes away, replace the original climate control unit. ■

DTC B1227 or TAM sensor open is indicated:
An Open in the Outside Air Temperature Sensor Circuit

1. Clear the DTC with the HDS.
2. Turn the ignition switch to LOCK (0), and then back to ON (II).
3. Do the self-diagnostic with the HDS (see page 21-11) or the climate control unit (see page 21-12).
4. Check for DTCs.

   Is DTC B1227 or TAM sensor open indicated?

   YES—Go to step 5.

   NO—Intermittent failure. Check for loose wires or poor connections on the outside air temperature sensor circuit. ■
5. Turn the ignition switch to LOCK (0).
6. Remove the outside air temperature sensor (see page 21-74) and test it (see page 21-73).

   Is the outside air temperature sensor OK?

   YES—Go to step 7.

   NO—Replace the outside air temperature sensor. ■
7. Disconnect the climate control unit 40P connector.
8. Check for continuity between climate control unit 40P connector terminal No. 16 and outside air temperature sensor 2P connector terminal No. 2.

CLIMATE CONTROL UNIT 40P CONNECTOR
Wire side of female terminals

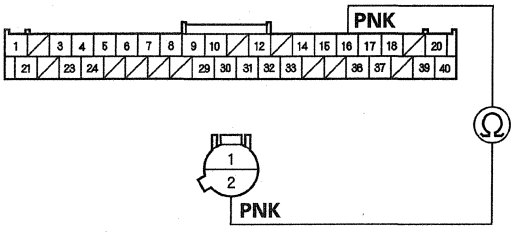

OUTSIDE AIR TEMPERATURE SENSOR 2P CONNECTOR
Wire side of female terminals

Is there continuity?

YES—Go to step 9.

NO—Repair an open in the wire between the climate control unit and the outside air temperature sensor. ■

(cont'd)

DTC Troubleshooting (cont'd)

9. Check for continuity between climate control unit 40P connector terminal No. 33 and outside air temperature sensor 2P connector terminal No. 1.

CLIMATE CONTROL UNIT 40P CONNECTOR
Wire side of female terminals

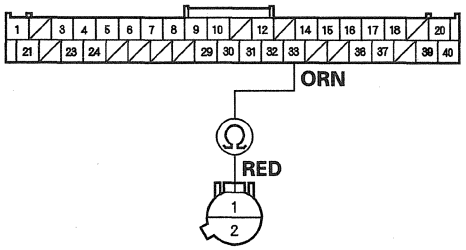

OUTSIDE AIR TEMPERATURE SENSOR 2P CONNECTOR
Wire side of female terminals

Is there continuity?

YES—Check for loose wires or poor connections at the climate control unit 40P connector and at the outside air temperature sensor 2P connector. If the connections are good, substitute a known-good climate control unit, and recheck. If the symptom/indication goes away, replace the original climate control unit. ■

NO—Repair an open in the wire between the climate control unit and the outside air temperature sensor. ■

DTC B1228 or TAM sensor short is indicated: A Short in the Outside Air Temperature Sensor Circuit

1. Clear the DTC with the HDS.
2. Turn the ignition switch to LOCK (0), and then back to ON (II).
3. Do the self-diagnostic with the HDS (see page 21-11) or the climate control unit (see page 21-12).
4. Check for DTCs.

   Is DTC B1228 or TAM sensor short indicated?

   YES—Go to step 5.

   NO—Intermittent failure. Check for loose wires or poor connections on the outside air temperature sensor circuit. ■
5. Turn the ignition switch to LOCK (0).
6. Remove the outside air temperature sensor (see page 21-74) and test it (see page 21-73).

   Is the outside air temperature sensor OK?

   YES—Go to step 7.

   NO—Replace the outside air temperature sensor. ■
7. Disconnect the climate control unit 40P connector.

8. Check for continuity between body ground and climate control unit 40P connector terminal No. 16.

CLIMATE CONTROL UNIT 40P CONNECTOR

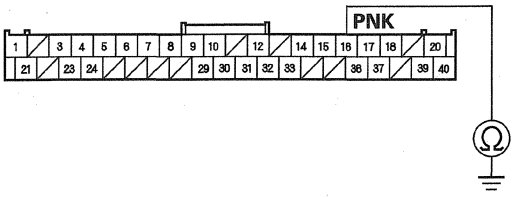

Wire side of female terminals

Is there continuity?

YES—Repair a short to body ground in the wire between the climate control unit and the outside air temperature sensor. ■

NO—Go to step 9.

9. Check for continuity between climate control unit 40P connector terminals No. 16 and No. 33.

CLIMATE CONTROL UNIT 40P CONNECTOR

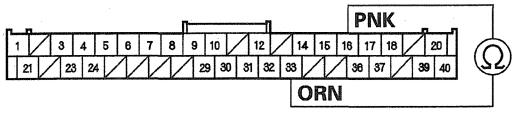

Wire side of female terminals

Is there continuity?

YES—Repair a short in the wires between the climate control unit and the outside air temperature sensor. ■

NO—Substitute a known-good climate control unit, and recheck. If the symptom/indication goes away, replace the original climate control unit. ■

DTC B1229 or TS sensor open is indicated: An Open in the Sunlight Sensor Circuit

1. Clear the DTC with the HDS.
2. Turn the ignition switch to LOCK (0), and then back to ON (II).
3. Do the self-diagnostic with the HDS (see page 21-11) or the climate control unit (see page 21-12).
4. Check for DTCs.

   Is DTC B1229 or TS sensor open indicated?

   YES—Go to step 5.

   NO—Intermittent failure. Check for loose wires or poor connections on the sunlight sensor circuit. ■
5. Turn the ignition switch to LOCK (0).
6. Disconnect the sunlight sensor 5P connector.
7. Disconnect the climate control unit 40P connector.
8. Check for continuity between climate control unit 40P connector terminal No. 18 and sunlight sensor 5P connector terminal No. 4.

CLIMATE CONTROL UNIT 40P CONNECTOR
Wire side of female terminals

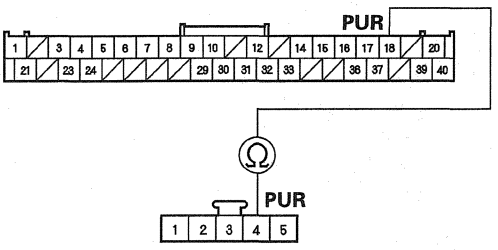

SUNLIGHT SENSOR 5P CONNECTOR
Wire side of female terminals

Is there continuity?

YES—Go to step 9.

NO—Repair an open in the wire between the climate control unit and the sunlight sensor. ■

(cont'd)

DTC Troubleshooting (cont'd)

9. Check for continuity between climate control unit 40P connector terminal No. **33** and sunlight sensor 5P connector terminal No. **2**.

CLIMATE CONTROL UNIT 40P CONNECTOR
Wire side of female terminals

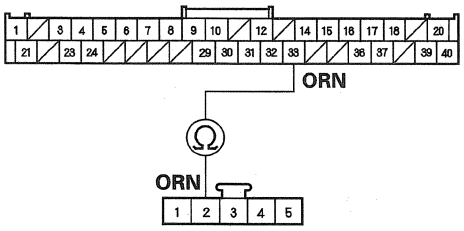

SUNLIGHT SENSOR 5P CONNECTOR
Wire side of female terminals

Is there continuity?

YES—Go to step 10.

NO—Repair a open in the wire between the climate control unit and the sunlight sensor. ■

10. Reconnect the sunlight sensor 5P connector.
11. Reconnect the climate control unit 40P connector.
12. Test the sunlight sensor (see page 21-74).

Is the sunlight sensor OK?

YES—Check for loose wires or poor connections at the climate control unit 40P connector and at the sunlight sensor 5P connector. If the connections are good, substitute a known-good climate control unit, and recheck. If the symptom/indication goes away, replace the original climate control unit. ■

NO—Replace the sunlight sensor (see page 21-75). ■

DTC B1230 or TS sensor short is indicated:
A Short in the Sunlight Sensor Circuit

1. Clear the DTC with the HDS.
2. Turn the ignition switch to LOCK (0), and then back to ON (II).
3. Do the self-diagnostic with the HDS (see page 21-11) or the climate control unit (see page 21-12).
4. Check for DTCs.

Is DTC B1230 or TS sensor short indicated?

YES—Go to step 5.

NO—Intermittent failure. Check for loose wires or poor connections on the sunlight sensor circuit. ■

5. Turn the ignition switch to LOCK (0).
6. Disconnect the sunlight sensor 5P connector.
7. Disconnect the climate control unit 40P connector.
8. Check for continuity between body ground and climate control unit 40P connector terminal No. **18**.

CLIMATE CONTROL UNIT 40P CONNECTOR

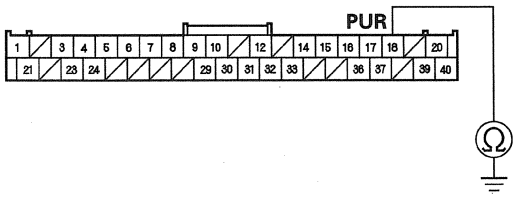

Wire side of female terminals

Is there continuity?

YES—Repair a short to body ground in the wire between the climate control unit and the sunlight sensor. ■

NO—Go to step 9.

9. Check for continuity between climate control unit 40P connector terminals No. 18 and No. 33.

CLIMATE CONTROL UNIT 40P CONNECTOR

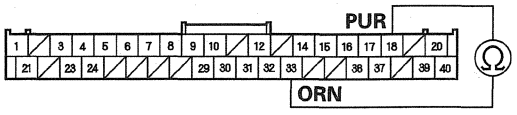

Wire side of female terminals

Is there continuity?

YES—Repair a short in the wires between the climate control unit and the sunlight sensor. ■

NO—Go to step 10.

10. Reconnect the sunlight sensor 5P connector.
11. Reconnect the climate control unit 40P connector.
12. Test the sunlight sensor (see page 21-74).

Is the sunlight sensor OK?

YES—Substitute a known-good climate control unit, and recheck. If the symptom/indication goes away, replace the original climate control unit. ■

NO—Replace the sunlight sensor (see page 21-75). ■

DTC B1231 or TE sensor open is indicated: An Open in the Evaporator Temperature Sensor Circuit

1. Clear the DTC with the HDS.
2. Turn the ignition switch to LOCK (0), and then back to ON (II).
3. Do the self-diagnostic with the HDS (see page 21-11) or the climate control unit (see page 21-12).
4. Check for DTCs.

Is DTC B1231 or TE sensor open indicated?

YES—Go to step 5.

NO—Intermittent failure. Check for loose wires or poor connections on the evaporator temperature sensor circuit. ■

5. Turn the ignition switch to LOCK (0).
6. Remove the evaporator temperature sensor (see page 21-76) and test it (see page 21-75).

Is the evaporator temperature sensor OK?

YES—Go to step 7.

NO—Replace the evaporator temperature sensor. ■

7. Disconnect the climate control unit 40P connector.

(cont'd)

DTC Troubleshooting (cont'd)

8. Check for continuity between climate control unit 40P connector terminal No. 17 and evaporator temperature sensor 2P connector terminal No. 1.

CLIMATE CONTROL UNIT 40P CONNECTOR
Wire side of female terminals

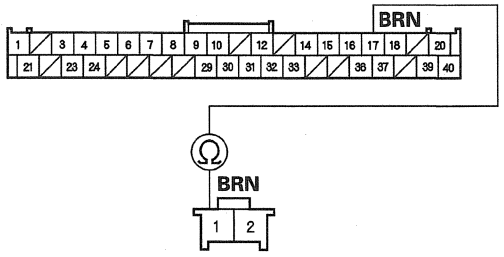

EVAPORATOR TEMPERATURE SENSOR 2P CONNECTOR
Wire side of female terminals

Is there continuity?

YES—Go to step 9.

NO—Repair an open in the wire between the climate control unit and the evaporator temperature sensor. ■

9. Check for continuity between climate control unit 40P connector terminal No. 33 and evaporator temperature sensor 2P connector terminal No. 2.

CLIMATE CONTROL UNIT 40P CONNECTOR
Wire side of female terminals

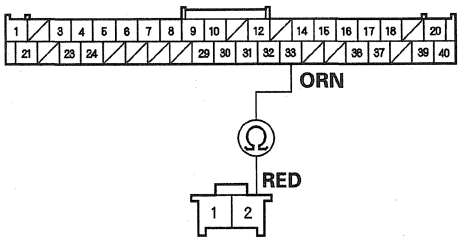

EVAPORATOR TEMPERATURE SENSOR 2P CONNECTOR
Wire side of female terminals

Is there continuity?

YES—Check for loose wires or poor connections at the climate control unit 40P connector and at the evaporator temperature sensor 2P connector. If the connections are good, substitute a known-good climate control unit, and recheck. If the symptom/indication goes away, replace the original climate control unit. ■

NO—Repair an open in the wire between the climate control unit and the evaporator temperature sensor. ■

DTC B1232 or TE sensor short is indicated:
A Short in the Evaporator Temperature Sensor Circuit

1. Clear the DTC with the HDS.
2. Turn the ignition switch to LOCK (0), and then back to ON (II).
3. Do the self-diagnostic with the HDS (see page 21-11) or the climate control unit (see page 21-12).
4. Check for DTCs.

   Is DTC B1232 or TE sensor short indicated?

   YES—Go to step 5.

   NO—Intermittent failure. Check for loose wires or poor connections on the evaporator temperature sensor circuit. ■
5. Turn the ignition switch to LOCK (0).
6. Remove the evaporator temperature sensor (see page 21-76) and test it (see page 21-75).

   Is the evaporator temperature sensor OK?

   YES—Go to step 7.

   NO—Replace the evaporator temperature sensor. ■
7. Disconnect the climate control unit 40P connector.
8. Check for continuity between body ground and climate control unit 40P connector terminal No. 17.

CLIMATE CONTROL UNIT 40P CONNECTOR

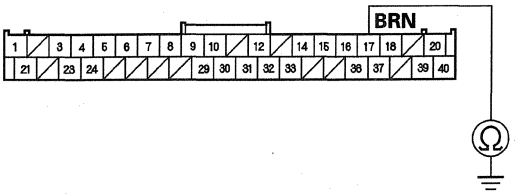

Wire side of female terminals

Is there continuity?

YES—Repair a short to body ground in the wire between the climate control unit and the evaporator temperature sensor. ■

NO—Go to step 9.

9. Check for continuity between climate control unit 40P connector terminals No. 17 and No. 33.

CLIMATE CONTROL UNIT 40P CONNECTOR

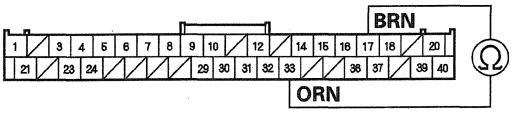

Wire side of female terminals

Is there continuity?

YES—Repair a short in the wires between the climate control unit and the evaporator temperature sensor. ■

NO—Substitute a known-good climate control unit, and recheck. If the symptom/indication goes away, replace the original climate control unit. ■

HONDA

DTC Troubleshooting (cont'd)

DTC B1235 or DrA/M motor lock is indicated:
A Problem in the Driver's Air Mix Control Linkage, Door, or Motor

1. Clear the DTC with the HDS.
2. Turn the ignition switch to LOCK (0), and then back to ON (II).
3. Do the self-diagnostic with the HDS (see page 21-11) or the climate control unit (see page 21-12).
4. Check for DTCs.

   Is DTC B1235 or DrA/M motor lock indicated?

   YES—Go to step 5.

   NO—Intermittent failure. ■
5. Turn the ignition switch to LOCK (0).
6. Test the driver's air mix control motor (see page 21-77).

   Is the driver's air mix control motor OK?

   YES—Substitute a known-good climate control unit, and recheck. If the symptom/indication goes away, replace the original climate control unit. ■

   NO—Replace the driver's air mix control motor (see page 21-78), or repair the driver's air mix control linkage or door. ■

DTC B1238 or PaA/M motor lock is indicated:
A Problem in the Passenger's Air Mix Control Linkage, Door, or Motor

1. Clear the DTC with the HDS.
2. Turn the ignition switch to LOCK (0), and then back to ON (II).
3. Do the self-diagnostic with the HDS (see page 21-11) or the climate control unit (see page 21-12).
4. Check for DTCs.

   Is DTC B1238 or PaA/M motor lock indicated?

   YES—Go to step 5.

   NO—Intermittent failure. ■
5. Turn the ignition switch to LOCK (0).
6. Test the passenger's air mix control motor (see page 21-78).

   Is the passenger's air mix control motor OK?

   YES—Substitute a known-good climate control unit, and recheck. If the symptom/indication goes away, replace the original climate control unit. ■

   NO—Replace the passenger's air mix control motor (see page 21-79), or repair the passenger's air mix control linkage or door. ■

DTC B1240 or Mode motor lock is indicated:
A Problem in the Mode Control Linkage, Doors, or Motor

1. Clear the DTC with the HDS.
2. Turn the ignition switch to LOCK (0), and then back to ON (II).
3. Do the self-diagnostic with the HDS (see page 21-11) or the climate control unit (see page 21-12).
4. Check for DTCs.

   Is DTC B1240 or Mode motor lock indicated?

   YES—Go to step 5.

   NO—Intermittent failure. ■
5. Turn the ignition switch to LOCK (0).
6. Test the mode control motor (see page 21-81).

   Is the mode control motor OK?

   YES—Substitute a known-good climate control unit, and recheck. If the symptom/indication goes away, replace the original climate control unit. ■

   NO—Replace the mode control motor (see page 21-82), or repair the mode control linkage or doors. ■

DTC B1241 or Blower motor lock is indicated:
A Problem in the Blower Motor Circuit

1. Clear the DTC with the HDS.
2. Turn the ignition switch to LOCK (0), and then back to ON (II).
3. Do the self-diagnostic with the HDS (see page 21-11) or the climate control unit (see page 21-12).
4. Check for DTCs.

   Is DTC B1241 or Blower motor lock indicated?

   YES—Go to step 5.

   NO—Intermittent failure. Check for loose wires or poor connections on the blower motor circuit. ■
5. Turn the ignition switch to LOCK (0).
6. Check the No. 21 (40 A) fuse in the under-hood fuse/relay box, and the No. 30 (7.5 A) fuse in the driver's under-dash fuse/relay box.

   Are the fuses OK?

   YES—Go to step 7.

   NO—Check for a short in the No. 21 (40 A) and No. 30 (7.5 A) fuses circuit. ■
7. Connect blower motor 2P connector terminal No. 2 to body ground with a jumper wire.

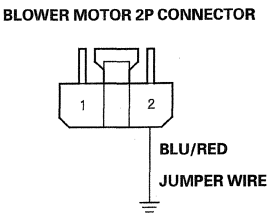

Wire side of female terminals

8. Turn the ignition switch to ON (II).

   Does the blower motor run?

   YES—Go to step 9.

   NO—Go to step 25.

(cont'd)

DTC Troubleshooting (cont'd)

9. Turn the ignition switch to LOCK (0).
10. Disconnect the jumper wire.
11. Disconnect the power transistor 5P connector.
12. Check for continuity between power transistor 5P connector terminal No. 5 and body ground.

POWER TRANSISTOR 5P CONNECTOR

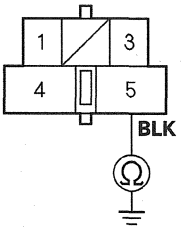

Wire side of female terminals

Is there continuity?

YES—Go to step 13.

NO—Check for an open in the wire between the power transistor and body ground. If the wire is OK, check for poor ground at G506 (see page 22-38). ■

13. Connect power transistor 5P connector terminals No. 4 and No. 5 with a jumper wire.

POWER TRANSISTOR 5P CONNECTOR

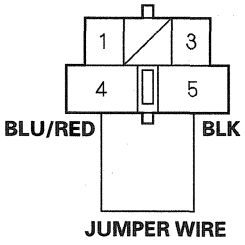

Wire side of female terminals

14. Turn the ignition switch to ON (II).

Does the blower motor run at high speed?

YES—Go to step 15.

NO—Repair open in the BLU/RED wire between the power transistor and the blower motor. ■

15. Turn the ignition switch to LOCK (0).
16. Disconnect the jumper wire.
17. Disconnect the climate control unit 40P connector.
18. Check for continuity between body ground and climate control unit 40P connector terminals No. 9 and No. 10 individually.

CLIMATE CONTROL UNIT 40P CONNECTOR

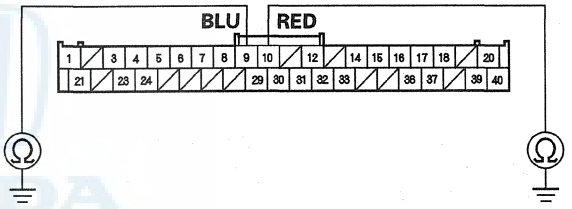

Wire side of female terminals

Is there continuity?

YES—Repair a short to body ground in the wire(s) between the climate control unit and the power transistor. ■

NO—Go to step 19.

19. Check for continuity between the following terminals of the climate control unit 40P connector and the power transistor 5P connector.

40P:	5P:
No. 9	No. 1
No. 10	No. 3

CLIMATE CONTROL UNIT 40P CONNECTOR
Wire side of female terminals

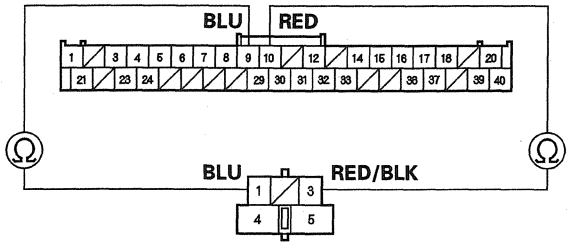

POWER TRANSISTOR 5P CONNECTOR
Wire side of female terminals

Is there continuity?

YES—Go to step 20.

NO—Repair an open in the wire(s) between the climate control unit and the power transistor. ■

20. Turn the ignition switch to ON (II).

21. Measure the voltage between body ground and climate control unit 40P connector terminals No. 9 and No. 10 individually.

CLIMATE CONTROL UNIT 40P CONNECTOR

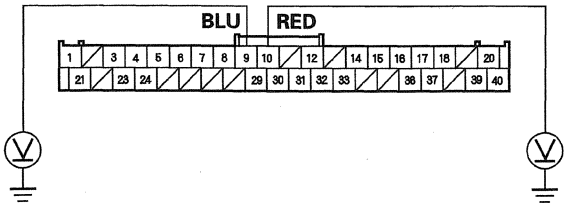

Wire side of female terminals

Is there voltage?

YES—Repair short to power in the wire(s). ■

NO—Go to step 22.

22. Turn the ignition switch to LOCK (0).

23. Reconnect the climate control unit 40P connector.

24. Test the power transistor (see page 21-76).

Is the power transistor OK?

YES—Check for loose wires or poor connections at the climate control unit 40P connector and at the power transistor 5P connector. If the connections are good, substitute a known-good climate control unit, and recheck. If the symptom/indication goes away, replace the original climate control unit. ■

NO—Replace the power transistor. ■

25. Disconnect the jumper wire.

26. Disconnect the blower motor 2P connector.

27. Measure the voltage between blower motor 2P connector terminal No. 1 and body ground.

BLOWER MOTOR 2P CONNECTOR

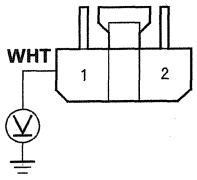

Wire side of female terminals

Is there battery voltage?

YES—Replace the blower motor (see page 21-86). ■

NO—Go to step 28.

28. Turn the ignition switch to LOCK (0).

29. Remove the blower motor relay from the under-hood fuse/relay box, and test it (see page 22-93).

Is the relay OK?

YES—Go to step 30.

NO—Replace the blower motor relay. ■

(cont'd)

DTC Troubleshooting (cont'd)

30. Measure the voltage between blower motor relay 4P socket terminal No. 2 and body ground.

BLOWER MOTOR RELAY 4P SOCKET

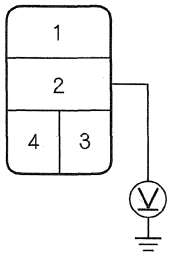

Terminal side of female terminals

Is there battery voltage?

YES—Go to step 31.

NO—Replace the under-hood fuse/relay box (see page 22-84). ■

31. Turn the ignition switch to ON (II).

32. Measure the voltage between blower motor relay 4P socket terminal No. 4 and body ground.

BLOWER MOTOR RELAY 4P SOCKET

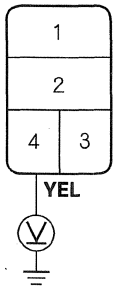

Terminal side of female terminals

Is there battery voltage?

YES—Go to step 33.

NO—Repair an open in the wire between the No. 30 (7.5 A) fuse in the driver's under-dash fuse/relay box and the blower motor relay. ■

33. Turn the ignition switch to LOCK (0).

34. Check for continuity between blower motor relay 4P socket terminal No. 3 and body ground.

BLOWER MOTOR RELAY 4P SOCKET

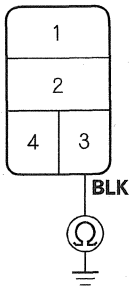

Terminal side of female terminals

Is there continuity?

YES—Repair an open in the BLK wire between the blower motor relay and the blower motor. ■

NO—Check for an open in the wire between the blower motor relay and body ground. If the wire is OK, check for poor ground at G301 (see page 22-26). ■

DTC B2975 or DrVENT sensor open is indicated: An Open in the Driver's Vent Air Temperature Sensor Circuit

1. Clear the DTC with the HDS.
2. Turn the ignition switch to LOCK (0), and then back to ON (II).
3. Do the self-diagnostic with the HDS (see page 21-11) or the climate control unit (see page 21-12).
4. Check for DTCs.

   Is DTC B2975 or DrVENT sensor open indicated?

   YES—Go to step 5.

   NO—Intermittent failure. Check for loose wires or poor connections on the driver's vent air temperature sensor circuit. ■
5. Turn the ignition switch to LOCK (0).
6. Remove the driver's vent air temperature sensor (see page 21-72) and test it (see page 21-72).

   Is the driver's vent air temperature sensor OK?

   YES—Go to step 7.

   NO—Replace the driver's vent air temperature sensor. ■
7. Disconnect the climate control unit 40P connector.
8. Check for continuity between climate control unit 40P connector terminal No. 36 and driver's vent air temperature sensor 2P connector terminal No. 1.

CLIMATE CONTROL UNIT 40P CONNECTOR
Wire side of female terminals

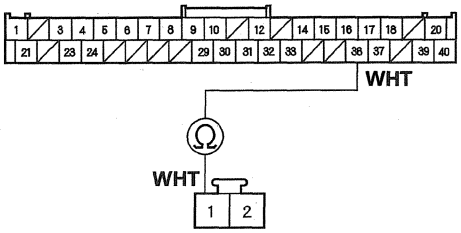

DRIVER'S VENT AIR TEMPERATURE SENSOR 2P CONNECTOR
Wire side of female terminals

Is there continuity?

YES—Go to step 9.

NO—Repair an open in the wire between the climate control unit and the driver's vent air temperature sensor. ■

(cont'd)

DTC Troubleshooting (cont'd)

9. Check for continuity between climate control unit 40P connector terminal No. 33 and driver's vent air temperature sensor 2P connector terminal No. 2.

CLIMATE CONTROL UNIT 40P CONNECTOR
Wire side of female terminals

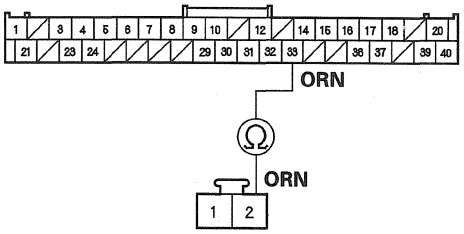

DRIVER'S VENT AIR TEMPERATURE SENSOR 2P CONNECTOR
Wire side of female terminals

Is there continuity?

YES—Check for loose wires or poor connections at the climate control unit 40P connector and at the driver's vent air temperature sensor 2P connector. If the connections are good, substitute a known-good climate control unit, and recheck. If the symptom/indication goes away, replace the original climate control unit. ■

NO—Repair an open in the wire between the climate control unit and the driver's vent air temperature sensor. ■

DTC B2976 or DrVENT sensor short is indicated: A Short in the Driver's Vent Air Temperature Sensor Circuit

1. Clear the DTC with the HDS.
2. Turn the ignition switch to LOCK (0), and then back to ON (II).
3. Do the self-diagnostic with the HDS (see page 21-11) or the climate control unit (see page 21-12).
4. Check for DTCs.

   Is DTC B2976 or DrVENT sensor short indicated?

   YES—Go to step 5.

   NO—Intermittent failure. Check for loose wires or poor connections on the driver's vent air temperature sensor circuit. ■
5. Turn the ignition switch to LOCK (0).
6. Remove the driver's vent air temperature sensor (see page 21-72) and test it (see page 21-72).

   Is the driver's vent air temperature sensor OK?

   YES—Go to step 7.

   NO—Replace the driver's vent air temperature sensor. ■
7. Disconnect the climate control unit 40P connector.

8. Check for continuity between body ground and climate control unit 40P connector terminal No. 36.

CLIMATE CONTROL UNIT 40P CONNECTOR

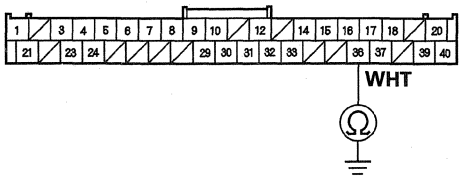

Wire side of female terminals

Is there continuity?

YES—Repair a short to body ground in the wire between the climate control unit and the driver's vent air temperature sensor. ■

NO—Go to step 9.

9. Check for continuity between climate control unit 40P connector terminals No. 33 and No. 36.

CLIMATE CONTROL UNIT 40P CONNECTOR

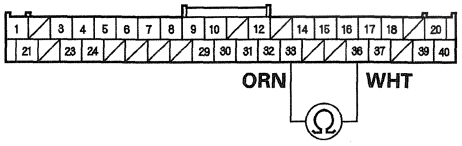

Wire side of female terminals

Is there continuity?

YES—Repair a short in the wires between the climate control unit and the driver's vent air temperature sensor. ■

NO—Substitute a known-good climate control unit, and recheck. If the symptom/indication goes away, replace the original climate control unit. ■

DTC B2977 or PaVENT sensor open is indicated: An Open in the Passenger's Vent Air Temperature Sensor Circuit

1. Clear the DTC with the HDS.
2. Turn the ignition switch to LOCK (0), and then back to ON (II).
3. Do the self-diagnostic with the HDS (see page 21-11) or the climate control unit (see page 21-12).
4. Check for DTCs.

   Is DTC B2977 or PaVENT sensor open indicated?

   YES—Go to step 5.

   NO—Intermittent failure. Check for loose wires or poor connections on the passenger's vent air temperature sensor circuit. ■
5. Turn the ignition switch to LOCK (0).
6. Remove the passenger's vent air temperature sensor (see page 21-73) and test it (see page 21-72).

   Is the passenger's vent air temperature sensor OK?

   YES—Go to step 7.

   NO—Replace the passenger's vent air temperature sensor. ■
7. Disconnect the climate control unit 40P connector.

(cont'd)

DTC Troubleshooting (cont'd)

8. Check for continuity between climate control unit 40P connector terminal No. 37 and passenger's vent air temperature sensor 2P connector terminal No. 1.

CLIMATE CONTROL UNIT 40P CONNECTOR
Wire side of female terminals

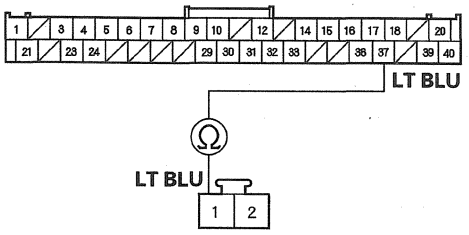

PASSENGER'S VENT AIR TEMPERATURE SENSOR 2P CONNECTOR
Wire side of female terminals

Is there continuity?

YES—Go to step 9.

NO—Repair an open in the wire between the climate control unit and the passenger's vent air temperature sensor. ■

9. Check for continuity between climate control unit 40P connector terminal No. 33 and passenger's vent air temperature sensor 2P connector terminal No. 2.

CLIMATE CONTROL UNIT 40P CONNECTOR
Wire side of female terminals

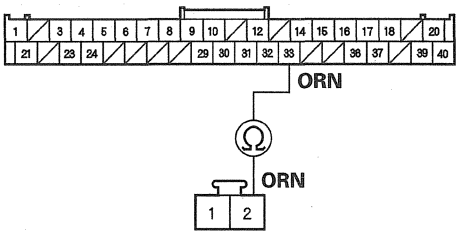

PASSENGER'S VENT AIR TEMPERATURE SENSOR 2P CONNECTOR
Wire side of female terminals

Is there continuity?

YES—Check for loose wires or poor connections at the climate control unit 40P connector and at the passenger's vent air temperature sensor 2P connector. If the connections are good, substitute a known-good climate control unit, and recheck. If the symptom/indication goes away, replace the original climate control unit. ■

NO—Repair an open in the wire between the climate control unit and the passenger's vent air temperature sensor. ■

DTC B2978 or PaVENT sensor short is indicated: A Short in the Passenger's Vent Air Temperature Sensor Circuit

1. Clear the DTC with the HDS.
2. Turn the ignition switch to LOCK (0), and then back to ON (II).
3. Do the self-diagnostic with the HDS (see page 21-11) or the climate control unit (see page 21-12).
4. Check for DTCs.

   Is DTC B2978 or PaVENT sensor short indicated?

   YES—Go to step 5.

   NO—Intermittent failure. Check for loose wires or poor connections on the passenger's vent air temperature sensor circuit. ■
5. Turn the ignition switch to LOCK (0).
6. Remove the passenger's vent air temperature sensor (see page 21-73) and test it (see page 21-72).

   Is the passenger's vent air temperature sensor OK?

   YES—Go to step 7.

   NO—Replace the passenger's vent air temperature sensor. ■
7. Disconnect the climate control unit 40P connector.
8. Check for continuity between body ground and climate control unit 40P connector terminal No. 37.

CLIMATE CONTROL UNIT 40P CONNECTOR

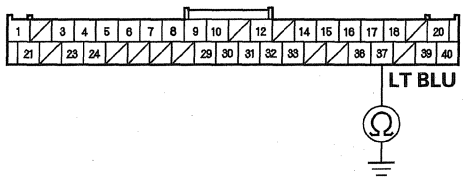

Wire side of female terminals

Is there continuity?

YES—Repair a short to body ground in the wire between the climate control unit and the passenger's vent air temperature sensor. ■

NO—Go to step 9.

9. Check for continuity between climate control unit 40P connector terminals No. 33 and No. 37.

CLIMATE CONTROL UNIT 40P CONNECTOR

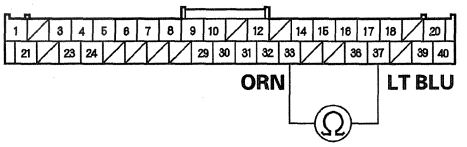

Wire side of female terminals

Is there continuity?

YES—Repair a short in the wires between the climate control unit and the passenger's vent air temperature sensor. ■

NO—Substitute a known-good climate control unit, and recheck. If the symptom/indication goes away, replace the original climate control unit. ■

DTC Troubleshooting (cont'd)

DTC B2979 or PRE sensor open is indicated:
An Open in the A/C Pressure Sensor Circuit

1. Clear the DTC with the HDS.
2. Turn the ignition switch to LOCK (0), and then back to ON (II).
3. Do the self-diagnostic with the HDS (see page 21-11) or the climate control unit (see page 21-12).
4. Check for DTCs.

   Is DTC B2979 or PRE sensor open indicated?

   YES—Go to step 5.

   NO—Intermittent failure. Check for loose wires or poor connections on the A/C pressure sensor circuit. ■
5. Turn the ignition switch to LOCK (0).
6. Disconnect the A/C pressure sensor 3P connector.
7. Disconnect the climate control unit 40P connector.
8. Check for continuity between the following terminals of the climate control unit 40P connector and the A/C pressure sensor 3P connector.

40P:	3P:
No. 12	No. 1
No. 14	No. 2
No. 33	No. 3

CLIMATE CONTROL UNIT 40P CONNECTOR
Wire side of female terminals

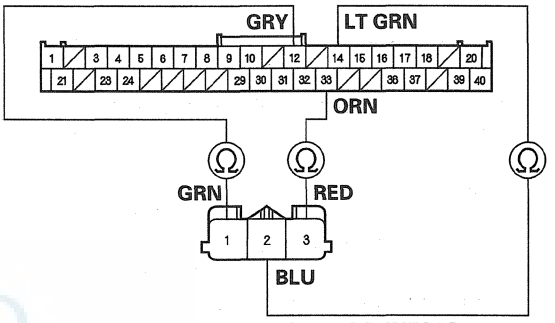

A/C PRESSURE SENSOR 3P CONNECTOR
Wire side of female terminals

Is there continuity?

YES—Go to step 9.

NO—Repair an open in the wire(s) between the climate control unit and the A/C pressure sensor. ■

9. Check for proper A/C system pressure.

   Is the pressure within specifications?

   YES—Check for loose wires or poor connections at the climate control unit 40P connector and at the A/C pressure sensor 3P connector. If the connections are good, replace the A/C pressure sensor. If the symptom/indication continues, substitute a known-good climate control unit, and recheck. If the symptom/indication goes away, replace the original climate control unit. ■

   NO—Repair the A/C pressure problem. ■

DTC B2980 or PRE sensor short is indicated:
A short in the A/C Pressure Sensor Circuit

1. Clear the DTC with the HDS.
2. Turn the ignition switch to LOCK (0), and then back to ON (II).
3. Do the self-diagnostic with the HDS (see page 21-11) or the climate control unit (see page 21-12).
4. Check for DTCs.

   Is DTC B2980 or PRE sensor short indicated?

   YES—Go to step 5.

   NO—Intermittent failure. Check for loose wires or poor connections on the A/C pressure sensor circuit. ■
5. Turn the ignition switch to LOCK (0).
6. Disconnect the A/C pressure sensor 3P connector.
7. Disconnect the climate control unit 40P connector.
8. Check for continuity between body ground and climate control unit 40P connector terminals No. 12 and No. 14 individually.

CLIMATE CONTROL UNIT 40P CONNECTOR

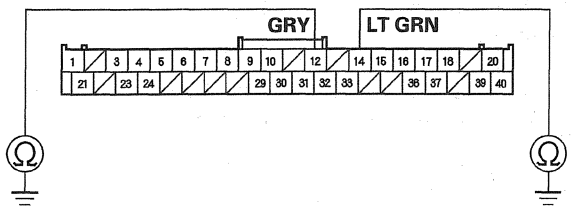

Wire side of female terminals

   Is there continuity?

   YES—Repair a short to body ground in the wire(s) between the climate control unit and the A/C pressure sensor. ■

   NO—Go to step 9.
9. Check for continuity between the climate control unit 40P connector terminals as follows.

From terminal	To terminals
12	14, 33
14	33

   Is there continuity between any of the terminals?

   YES—Repair a short in the wires. ■

   NO—Go to step 10.
10. Check for proper A/C system pressure.

    Is the pressure within specifications?

    YES—Replace the A/C pressure sensor. If the symptom/indication continues, substitute a known-good climate control unit, and recheck. If the symptom/indication goes away, replace the original climate control unit. ■

    NO—Repair the A/C pressure problem. ■

DTC Troubleshooting (cont'd)

DTC B2981 or NAVI communication error is indicated: Climate Control Unit Lost Communication with Navigation Unit

1. Clear the DTC with the HDS.
2. Turn the ignition switch to LOCK (0), and then back to ON (II).
3. Do the self-diagnostic with the HDS (see page 21-11) or the climate control unit (see page 21-12).
4. Check for DTCs.

   Is DTC B2981 or NAVI communication error indicated?

   YES—Go to step 5.

   NO—Intermittent failure. Check for loose wires or poor connections on the navigation unit and climate control unit circuit. ■
5. Turn the ignition switch to LOCK (0).
6. Disconnect navigation unit connector B (32P).
7. Disconnect the climate control unit 40P connector.
8. Check for continuity between the following terminals of the climate control unit 40P connector and navigation unit connector B (32P).

40P:	32P:
No. 6	No. 20
No. 7	No. 4
No. 8	No. 21

CLIMATE CONTROL UNIT 40P CONNECTOR
Wire side of female terminals

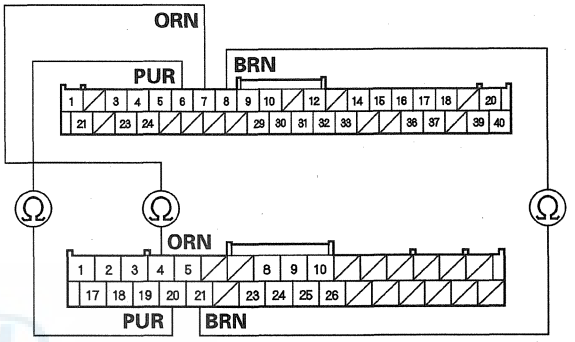

NAVIGATION UNIT CONNECTOR B (32P)
Wire side of female terminals

Is there continuity?

YES—Go to step 9.

NO—Repair an open in the wire(s) between the climate control unit and the navigation unit. ■

9. Check for continuity between body ground and climate control unit 40P connector terminals No. 6, 7, and 8 individually.

CLIMATE CONTROL UNIT 40P CONNECTOR

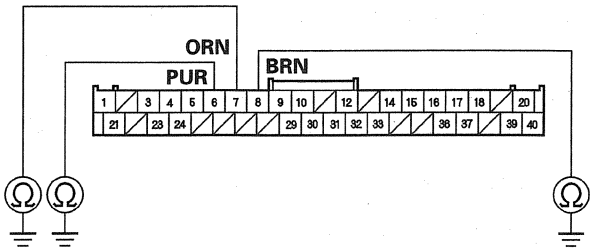

Wire side of female terminals

Is there continuity?

YES—Repair a short to body ground in the wire(s) between the climate control unit and the navigation unit. ■

NO—Go to step 10.

10. Check for continuity between the climate control unit 40P connector terminals as follows.

From terminal	To terminals
6	7, 8
7	8

Is there continuity between any of the terminals?

YES—Repair a short in the wires. ■

NO—Check for loose wires or poor connections at the climate control unit 40P connector and at navigation unit connector B (32P). If the connections are good, substitute a known-good climate control unit, and recheck. If the symptom/indication goes away, replace the original climate control unit. If the symptom/indication continues, substitute a known-good navigation unit, and recheck. If the symptom/indication goes away, replace the original navigation unit. ■

DTC B2982 or BUS communication error is indicated: Climate Control Unit Lost Communication with Each Control Motor

1. Clear the DTC with the HDS.
2. Turn the ignition switch to LOCK (0), and then back to ON (II).
3. Do the self-diagnostic with the HDS (see page 21-11) or the climate control unit (see page 21-12).
4. Check for DTCs.

   Is DTC B2982 or BUS communication error indicated?

   YES—Go to step 5.

   NO—Intermittent failure. Check for loose wires or poor connections on the each control motor circuit. ■
5. Turn the ignition switch to LOCK (0).
6. Test the driver's air mix control motor (see page 21-77), the passenger's air mix control motor (see page 21-78), the driver's cool vent control motor (see page 21-79), the passenger's cool vent control motor (see page 21-80), the mode control motor (see page 21-81), the recirculation control motor (see page 21-82), and the rear vent control motor (see page 21-83).

   Is each control motor OK?

   YES—Check for loose wires or poor connections at the climate control unit 40P connector and at the each control motor 5P connector. If the connections are good, substitute a known-good climate control unit, and recheck. If the symptom/indication goes away, replace the original climate control unit. If the symptom/indication continues, replace the A/C wire harness. ■

   NO—Replace the control motor with a problem. ■

DTC Troubleshooting (cont'd)

DTC B2983 or R/F motor lock is indicated: A Problem in the Recirculation Control Linkage, Door, or Motor

1. Clear the DTC with the HDS.
2. Turn the ignition switch to LOCK (0), and then back to ON (II).
3. Do the self-diagnostic with the HDS (see page 21-11) or the climate control unit (see page 21-12).
4. Check for DTCs.

   Is DTC B2983 or R/F motor lock indicated?

   YES—Go to step 5.

   NO—Intermittent failure. Check for loose wires or poor connections on the recirculation control motor circuit. ■
5. Turn the ignition switch to LOCK (0).
6. Test the recirculation control motor (see page 21-82).

   Is the recirculation control motor OK?

   YES—Substitute a known-good climate control unit, and recheck. If the symptom/indication goes away, replace the original climate control unit. ■

   NO—Replace the recirculation control motor (see page 21-83), or repair the recirculation control linkage or door. ■

DTC B2984 or DrC/V motor lock is indicated: A Problem in the Driver's Cool Vent Control Linkage, Door, or Motor

1. Clear the DTC with the HDS.
2. Turn the ignition switch to LOCK (0), and then back to ON (II).
3. Do the self-diagnostic with the HDS (see page 21-11) or the climate control unit (see page 21-12).
4. Check for DTCs.

   Is DTC B2984 or DrC/V motor lock indicated?

   YES—Go to step 5.

   NO—Intermittent failure. Check for loose wires or poor connections on the driver's cool vent control motor circuit. ■
5. Turn the ignition switch to LOCK (0).
6. Test the driver's cool vent control motor (see page 21-79).

   Is the driver's cool vent control motor OK?

   YES—Substitute a known-good climate control unit, and recheck. If the symptom/indication goes away, replace the original climate control unit. ■

   NO—Replace the driver's cool vent control motor (see page 21-80), or repair the driver's cool vent control linkage or door. ■

DTC B2985 or PaC/V motor lock is indicated: A Problem in the Passenger's Cool Vent Control Linkage, Door, or Motor

1. Clear the DTC with the HDS.
2. Turn the ignition switch to LOCK (0), and then back to ON (II).
3. Do the self-diagnostic with the HDS (see page 21-11) or the climate control unit (see page 21-12).
4. Check for DTCs.

   Is DTC B2985 or PaC/V motor lock indicated?

   YES—Go to step 5.

   NO—Intermittent failure. Check for loose wires or poor connections on the passenger's cool vent motor circuit. ■
5. Turn the ignition switch to LOCK (0).
6. Test the passenger's cool vent control motor (see page 21-80).

   Is the passenger's cool vent control motor OK?

   YES—Substitute a known-good climate control unit, and recheck. If the symptom/indication goes away, replace the original climate control unit. ■

   NO—Replace the passenger's cool vent control motor (see page 21-81), or repair the passenger's cool vent control linkage or door. ■

DTC B2987 or RrVENT motor lock is indicated: A Problem in the Rear Vent Control Linkage, Door, or Motor

1. Clear the DTC with the HDS.
2. Turn the ignition switch to LOCK (0), and then back to ON (II).
3. Do the self-diagnostic with the HDS (see page 21-11) or the climate control unit (see page 21-12).
4. Check for DTCs.

   Is DTC B2987 or RrVENT motor lock indicated?

   YES—Go to step 5.

   NO—Intermittent failure. Check for loose wires or poor connections on the rear vent control motor circuit. ■
5. Turn the ignition switch to LOCK (0).
6. Test the rear vent control motor (see page 21-83).

   Is the rear vent control motor OK?

   YES—Substitute a known-good climate control unit, and recheck. If the symptom/indication goes away, replace the original climate control unit. ■

   NO—Replace the rear vent control motor (see page 21-84), or repair the rear vent control linkage or door. ■

DTC Troubleshooting (cont'd)

DTC B2991 or Audio communication error is indicated: Climate Control Unit Lost Communication with Audio Unit

1. Clear the DTC with the HDS.
2. Turn the ignition switch to LOCK (0), and then back to ON (II).
3. Do the self-diagnostic with the HDS (see page 21-11) or the climate control unit (see page 21-12).
4. Check for DTCs.

   Is DTC B2991 or Audio communication error indicated?

   YES—Go to step 5.

   NO—Intermittent failure. Check for loose wires or poor connections on the audio unit circuit. ■
5. Turn the ignition switch to LOCK (0).
6. Disconnect audio unit connector B (32P).
7. Disconnect the climate control unit 40P connector.
8. Check for continuity between the following terminals of the climate control unit 40P connector and audio unit connector B (32P).

40P:	32P:
No. 29	No. 26
No. 30	No. 10

CLIMATE CONTROL UNIT 40P CONNECTOR
Wire side of female terminals

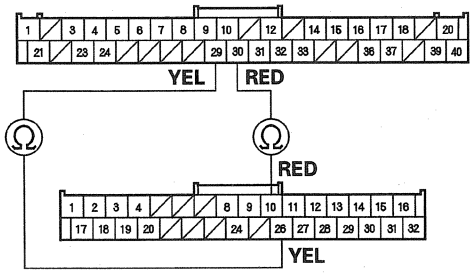

AUDIO UNIT CONNECTOR B (32P)
Wire side of female terminals

Is there continuity?

YES—Go to step 9.

NO—Repair an open in the wire(s) between the climate control unit and the audio unit. ■

9. Check for continuity between body ground and climate control unit 40P connector terminals No. 29 and No. 30 individually.

CLIMATE CONTROL UNIT 40P CONNECTOR

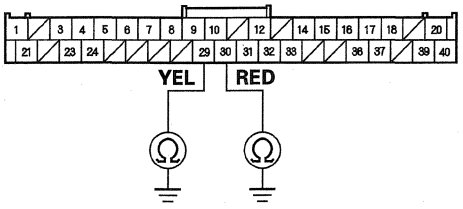

Wire side of female terminals

Is there continuity?

YES—Repair a short to body ground in the wire(s) between the climate control unit and the audio unit. ■

NO—Go to step 10.

10. Check for continuity between climate control unit 40P connector terminals No. 29 and No. 30.

CLIMATE CONTROL UNIT 40P CONNECTOR

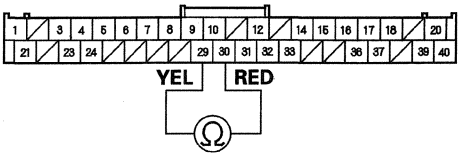

Wire side of female terminals

Is there continuity?

YES—Repair a short in the wires between the climate control unit and the audio unit. ■

NO—Check for loose wires or poor connections at the climate control unit 40P connector and at audio unit connector B (32P). If the connections are good, substitute a known-good climate control unit, and recheck. If the symptom/indication goes away, replace the original climate control unit. If the symptom/indication continues, substitute a known-good audio unit, and recheck. If the symptom/indication goes away, replace the original audio unit. ■

DTC Troubleshooting (cont'd)

COMP Solenoid error is indicated: A Problem in the Variable Capacity Control Solenoid Valve Circuit

1. Clear the DTC by turning the ignition switch to LOCK (0), and then back to ON (II).
2. Start the engine, and turn on the A/C.
3. Measure the voltage of the battery.

   Is there 11.5 V or more?

   YES—Go to step 4.

   NO—Check the battery condition (see page 22-90) and the charging system (see page 4-30). Correct any problems and recheck. ■
4. Turn off the A/C, and stop the engine.
5. Clear the DTC by turning the ignition switch to LOCK (0), and then back to ON (II).
6. Operate the climate control system in several modes.
7. Check for DTCs using the self-diagnostic.

   Is DTC COMP solenoid error indicated?

   YES—Go to step 8.

   NO—Intermittent failure, check for loose wires or poor connections on the variable capacity control solenoid valve circuit. ■
8. Turn the ignition switch to LOCK (0).
9. Disconnect the climate control unit 40P connector.
10. Measure the resistance between climate control unit 40P connector terminals No. 3 and No. 4.

CLIMATE CONTROL UNIT 40P CONNECTOR

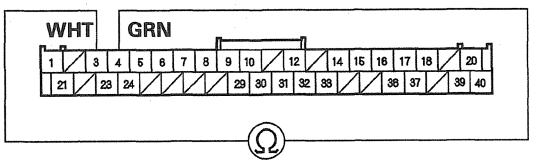

Wire side of female terminals

Is there about 5.2 Ω ?

YES—Go to step 11.

NO—Go to step 14.

11. Check for continuity between body ground and climate control unit 40P connector terminals No. 3 and No. 4 individually.

CLIMATE CONTROL UNIT 40P CONNECTOR

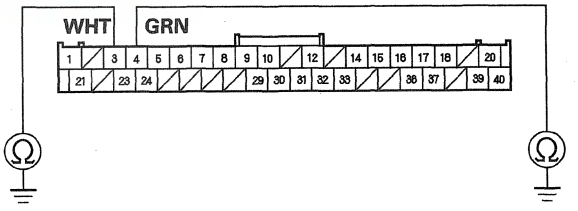

Wire side of female terminals

Is there continuity?

YES—Go to step 12.

NO—Substitute a known-good climate control unit, and recheck. If the symptom/indication goes away, replace the original climate control unit. ■

12. Disconnect the A/C compressor clutch 3P connector.

13. Check for continuity between body ground and climate control unit 40P connector terminals No. 3 and No. 4 individually.

CLIMATE CONTROL UNIT 40P CONNECTOR

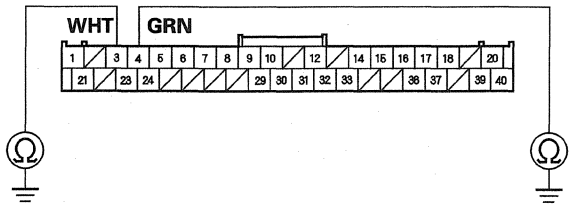

Wire side of female terminals

Is there continuity?

YES—Repair a short to body ground in the wire(s) between the climate control unit and the variable capacity control solenoid valve. ■

NO—The variable capacity control solenoid valve is faulty, replace the A/C compressor. ■

14. Disconnect the A/C compressor clutch 3P connector.

15. Check for continuity between climate control unit 40P connector terminals No. 3 and No. 4.

CLIMATE CONTROL UNIT 40P CONNECTOR

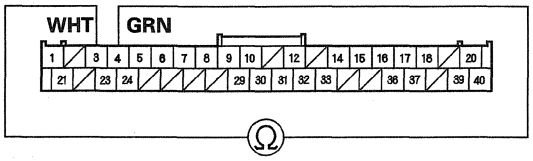

Wire side of female terminals

Is there continuity?

YES—Repair a short in the wires between the climate control unit and the variable capacity control solenoid valve. ■

NO—Go to step 16.

16. Check for continuity between the following terminals of the climate control unit 40P connector and the A/C compressor clutch 3P connector.

40P:	3P:
No. 3	No. 3
No. 4	No. 2

CLIMATE CONTROL UNIT 40P CONNECTOR
Wire side of female terminals

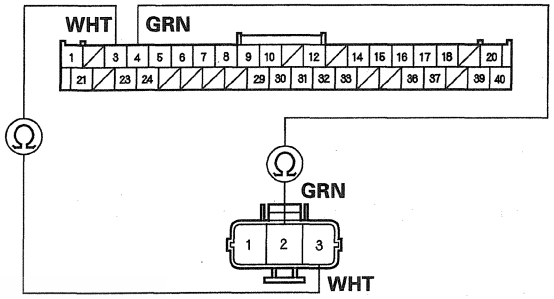

A/C COMPRESSOR CLUTCH 3P CONNECTOR
Terminal side of male terminals

Is there continuity?

YES—The variable capacity control solenoid valve is faulty, replace the A/C compressor. ■

NO—Repair an open in the wire(s) between the climate control unit and the variable capacity control solenoid valve. ■

Control Motor Power Supply Circuit Troubleshooting

1. Check the No. 9 (7.5 A) fuse in the passenger's under-dash fuse/relay box.

   Is the fuse OK?

   YES—Go to step 2.

   NO—Check for a short in the No. 9 (7.5 A) fuse circuit. ■

2. Remove the control motor relay, and test it (see page 22-93).

   Is the relay OK?

   YES—Go to step 3.

   NO—Replace the control motor relay. ■

3. Measure the voltage between body ground and the control motor relay 4P connector terminals No. 1 and No. 4 individually.

CONTROL MOTOR RELAY 4P CONNECTOR

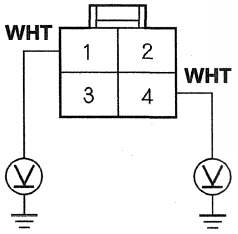

Wire side of female terminals

Is there battery voltage?

YES—Go to step 4.

NO—Repair an open in the wire(s) between the No. 9 (7.5 A) fuse in the passenger's under-dash fuse/relay box and the control motor relay. ■

4. Disconnect the climate control unit 40P connector.

5. Check for continuity between the following terminals of the climate control unit 40P connector and the control motor relay 4P connector.

40P:	4P:
No. 5	No. 2
No. 39	No. 3

CLIMATE CONTROL UNIT 40P CONNECTOR
Wire side of female terminals

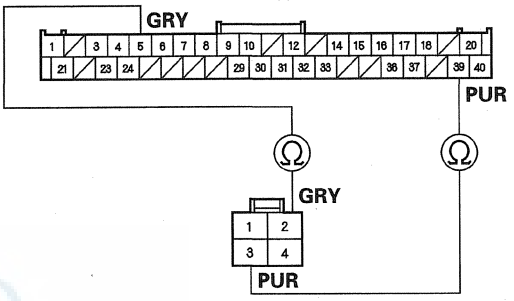

CONTROL MOTOR RELAY 4P CONNECTOR
Wire side of female terminals

Is there continuity?

YES—Check for loose wires or poor connections at the climate control unit 40P connector and at the control motor relay. If the connections are good, substitute a known-good climate control unit, and recheck. If the symptom/indication goes away, replace the original climate control unit. ■

NO—Repair an open in the wire(s) between the control motor relay and the climate control unit. ■

Aspirator Fan Circuit Troubleshooting

1. Check the No. 30 (7.5 A) fuse in the driver's under-dash fuse/relay box.

   Is the fuse OK?

   YES—Go to step 2.

   NO—Check for a short in the No. 30 (7.5 A) fuse circuit. ■

2. Disconnect the in-car temperature sensor 4P connector.

3. Turn the ignition switch to ON (II).

4. Measure the voltage between in-car temperature sensor 4P connector terminal No. 1 and body ground.

IN-CAR TEMPERATURE SENSOR 4P CONNECTOR

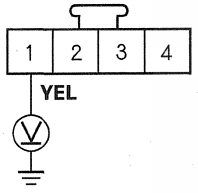

Wire side of female terminals

Is there battery voltage?

YES—Go to step 5.

NO—Repair an open in the wire between the No. 30 (7.5 A) fuse in the driver's under-dash fuse/relay box and the aspirator fan. ■

5. Reconnect the in-car temperature sensor 4P connector.

6. Connect in-car temperature sensor 4P connector terminal No. 4 to body ground with a jumper wire.

IN-CAR TEMPERATURE SENSOR 4P CONNECTOR

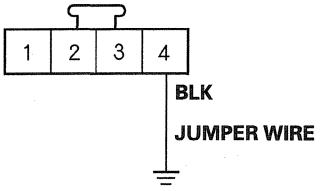

Wire side of female terminals

Does the aspirator fan run?

YES—Check for an open in the wire between the aspirator fan and body ground. If the wire is OK, check for poor ground at G501 (see page 22-32). ■

NO—Replace the aspirator fan. ■

HONDA

Climate Control Power and Ground Circuit Troubleshooting

1. Check the No. 30 (7.5 A) fuse in the driver's under-dash fuse/relay box.

   Is the fuse OK?

   YES—Go to step 2.

   NO—Check for a short in the No. 30 (7.5 A) fuse circuit. ■

2. Disconnect the climate control unit 40P connector.

3. Turn the ignition switch to ON (II).

4. Measure the voltage between climate control unit 40P connector terminal No. 20 and body ground.

CLIMATE CONTROL UNIT 40P CONNECTOR

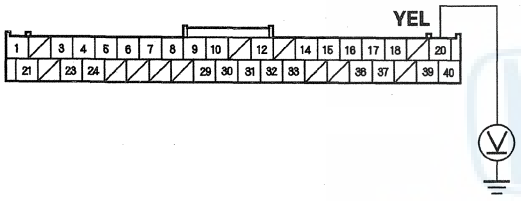

Wire side of female terminals

Is there battery voltage?

YES—Go to step 5.

NO—Repair an open in the wire between the No. 30 (7.5 A) fuse in the driver's under-dash fuse/relay box and the climate control unit. ■

5. Turn the ignition switch to LOCK (0).

6. Check for continuity between climate control unit connector terminal No. 31 and body ground.

CLIMATE CONTROL UNIT 40P CONNECTOR

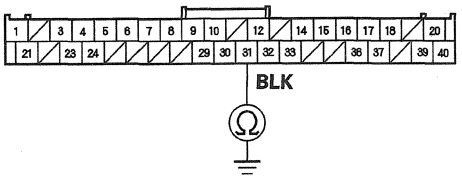

Wire side of female terminals

Is there continuity?

YES—Check for loose wires or poor connections at the climate control unit 40P connector. If the connections are good, substitute a known-good climate control unit, and recheck. If the symptom/indication goes away, replace the original climate control unit. ■

NO—Check for an open in the wires between the climate control unit and body ground. If the wire is OK, check for poor ground at G503 (see page 22-36). ■

A/C Compressor Clutch Circuit Troubleshooting

NOTE:
- It is normal for the A/C compressor to turn off under certain conditions, such as low idle, high engine coolant temperature, hard acceleration, or high/low pressure.
- Do not use this troubleshooting procedure if the fans are also inoperative with the A/C on. Refer to the symptom troubleshooting index.
- Before doing symptom troubleshooting, check for powertrain DTCs (see page 11-3).

1. Check the No. 12 (7.5 A) fuse in the under-hood fuse/relay box, and the No. 30 (7.5 A) fuse in the driver's under-dash fuse/relay box.

   Are the fuses OK?

   YES—Go to step 2.

   NO—Check for a short in the No. 12 (7.5 A) and No. 30 (7.5 A) fuses circuit. ■

2. Connect the HDS to the DLC.
3. Start the engine.
4. Turn on the A/C.
5. Check the A/C CLUTCH in the PGM-FI Date List with the HDS.

   Is the A/C CLUTCH on?

   YES—Go to step 7.

   NO—Go to step 6.

6. Using the HDS, confirm the following values in the PGM-FI Date List at idle.

ECT SENSOR 2	169—194 °F (76—90 °C)
TP SENSOR A	About 0.5 V
RPM	630—730
A/C PRESSURE SENSOR	196—3,138 kPa (2—32 kgf/cm^3) [28—455 psi]

   Are all the values within specifications?

   YES—Go to step 7.

   NO—Troubleshoot the value that is not within the specifications. ■

7. Remove the A/C compressor clutch relay from the under-hood fuse/relay box, and test it (see page 22-93).

   Is the relay OK?

   YES—Go to step 8.

   NO—Replace the A/C compressor clutch relay. ■

(cont'd)

A/C Compressor Clutch Circuit Troubleshooting (cont'd)

8. Measure the voltage between A/C compressor clutch relay 4P socket terminal No. 1 and body ground.

A/C COMPRESSOR CLUTCH RELAY 4P SOCKET

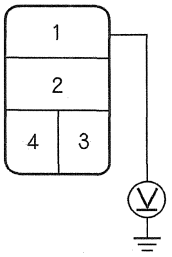

Terminal side of female terminals

Is there battery voltage?

YES—Go to step 9.

NO—Replace the under-hood fuse/relay box (see page 22-84). ■

9. Connect A/C compressor clutch relay 4P socket terminals No. 1 and No. 2 with a jumper wire.

A/C COMPRESSOR CLUTCH RELAY 4P SOCKET

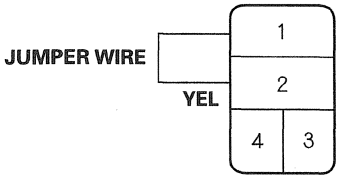

Terminal side of female terminals

Does the A/C compressor clutch click?

YES—Go to step 10.

NO—Go to step 20.

10. Disconnect the jumper wire.

11. Turn the ignition switch to ON (II).

12. Measure the voltage between A/C compressor clutch relay 4P socket terminal No. 4 and body ground.

A/C COMPRESSOR CLUTCH RELAY 4P SOCKET

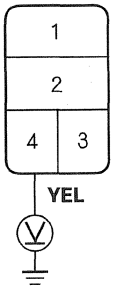

Terminal side of female terminals

Is there battery voltage?

YES—Go to step 13.

NO—Repair an open in the wire between the No. 30 (7.5 A) fuse in the driver's under-dash fuse/relay box and the A/C compressor clutch relay. ■

13. Turn the ignition switch to LOCK (0).

14. Reinstall the A/C compressor clutch relay.

15. Turn the ignition switch to ON (II).

16. Make sure the A/C switch is OFF.

17. Measure the voltage between driver's under-dash fuse/relay box connector D (17P) terminal No. 5 and body ground.

DRIVER'S UNDER-DASH FUSE/RELAY BOX CONNECTOR D (17P)

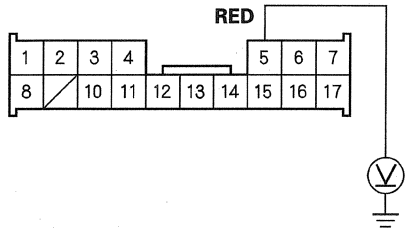

Wire side of female terminals

Is there battery voltage?

YES—Go to step 18.

NO—Repair an open in the wire between the A/C compressor clutch relay and the driver's under-dash fuse/relay box. ■

18. Measure the voltage between driver's under-dash fuse/relay box connector X (39P) terminal No. 9 and body ground.

DRIVER'S UNDER-DASH FUSE/RELAY BOX CONNECTOR X (39P)

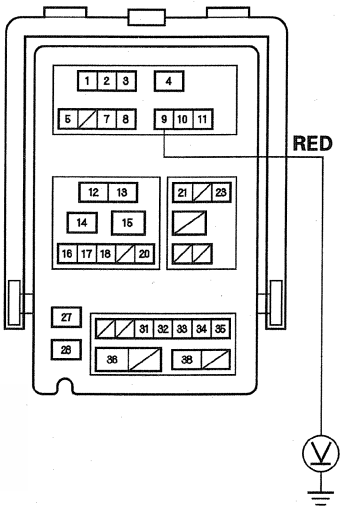

Wire side of female terminals

Is there battery voltage?

YES—Go to step 19.

NO—Replace the driver's under-dash fuse/relay box (see page 22-88). ■

(cont'd)

A/C Compressor Clutch Circuit Troubleshooting (cont'd)

19. Using the backprobe set, measure the voltage between PCM connector E (31P) terminal No. 27 and body ground with the PCM connectors connected.

PCM CONNECTOR E (31P)

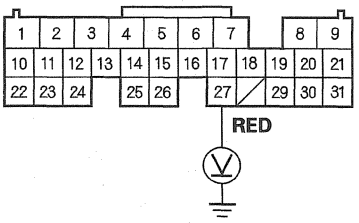

Wire side of female terminals

Is there battery voltage?

YES—Check for loose wires or poor connections at PCM connector E (31P). If the connections are good, check the PCM grounds. If the grounds are good, substitute a known-good PCM, and recheck. If the symptom/indication goes away, replace the original PCM (see page 11-232). ■

NO—Repair an open in the wire between the driver's under-dash fuse/relay box and the PCM. ■

20. Disconnect the jumper wire.

21. Disconnect the A/C compressor clutch 3P connector.

22. Check for continuity between A/C compressor clutch relay 4P socket terminal No. 2 and A/C compressor clutch 3P connector terminal No. 1.

A/C COMPRESSOR CLUTCH RELAY 4P SOCKET
Terminal side of female terminals

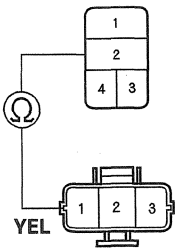

A/C COMPRESSOR CLUTCH 3P CONNECTOR
Terminal side of male terminals

Is there continuity?

YES—Check the A/C compressor clutch clearance, and the A/C compressor clutch field coil (see page 21-95). Repair as needed. ■

NO—Repair an open in the wire between the A/C compressor clutch relay and the A/C compressor clutch. ■

In-car Temperature Sensor Test

1. Remove the in-car temperature sensor (see page 21-71).

2. Compare the resistance reading between terminals No. 2 and No. 3 of the in-car temperature sensor with the specifications shown in the graph; the resistance should be within the specifications.

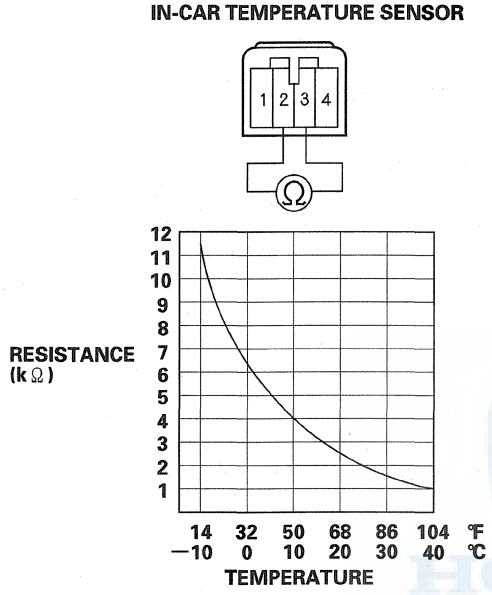

3. If the resistance is not as specified, replace the in-car temperature sensor (see page 21-71).

NOTICE

Incorrectly applying power and ground to the in-car temperature sensor will damage it. Follow the instructions carefully.

4. Connect battery power to terminal No. 1 of the in-car temperature sensor, and ground terminal No. 4; the aspirator fan should run.

5. If the aspirator fan did not run in step 4, replace the in-car temperature sensor (see page 21-71).

In-car Temperature Sensor Replacement

1. Remove the in-car temperature sensor (A) from the driver's dashboard lower cover, then disconnect the 4P connector (B).

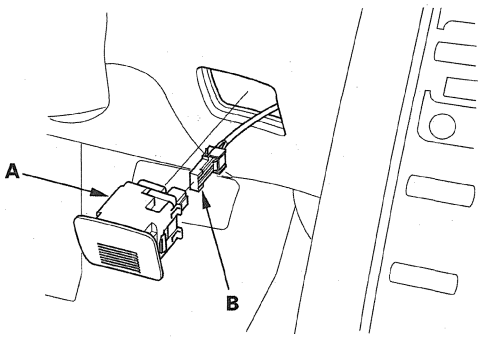

2. Install the sensor in the reverse order of removal.

HONDA

Vent Air Temperature Sensor Test

1. Remove the driver's vent air temperature sensor (see page 21-72) or the passenger's vent air temperature sensor (see page 21-73).
2. Check for a change in resistance by heating the sensor with a hair dryer or cooling the sensor in a cool cup of water.
3. Compare the resistance reading between terminals No. 1 and No. 2 of the vent air temperature sensor with the specifications shown in the graph; the resistance should be within the specifications.

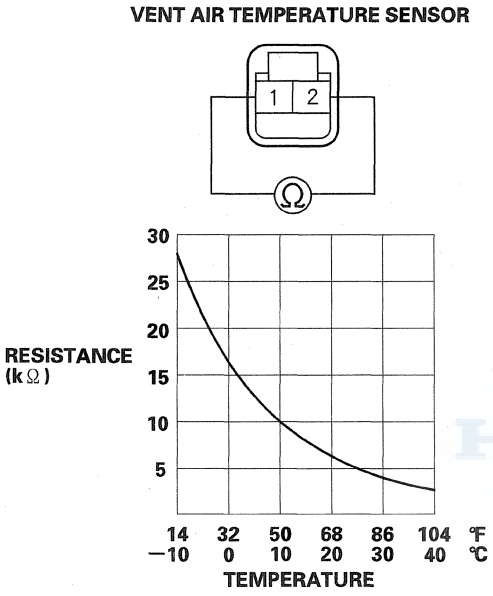

4. If the resistance is not as specified, replace the driver's vent air temperature sensor (see page 21-72) or the passenger's vent air temperature sensor (see page 21-73).

Driver's Vent Air Temperature Sensor Replacement

1. Remove the gauge control module (see page 22-419).
2. Disconnect the connector (A) from the driver's vent air temperature sensor. Remove the driver's vent air temperature sensor (B).

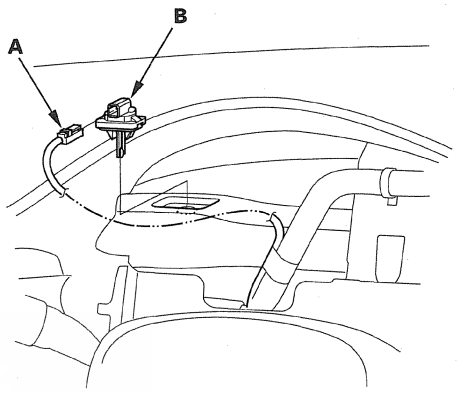

3. Install the sensor in the reverse order of removal.

Passenger's Vent Air Temperature Sensor Replacement

1. Remove the glove box (see page 20-103).
2. Disconnect the connector (A) from the passenger's vent air temperature sensor. Remove the passenger's vent air temperature sensor (B).

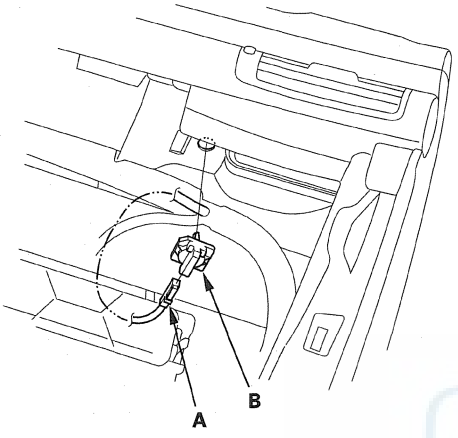

3. Install the sensor in the reverse order of removal.

Outside Air Temperature Sensor Test

1. Remove the outside air temperature sensor (see page 21-74).
2. Dip the sensor in ice water, and measure the resistance. Then pour warm water on the sensor, and check for a change in resistance.
3. Compare the resistance reading between terminals No. 1 and No. 2 of the outside air temperature sensor with the specifications shown in the graph; the resistance should be within the specifications.

OUTSIDE AIR TEMPERATURE SENSOR

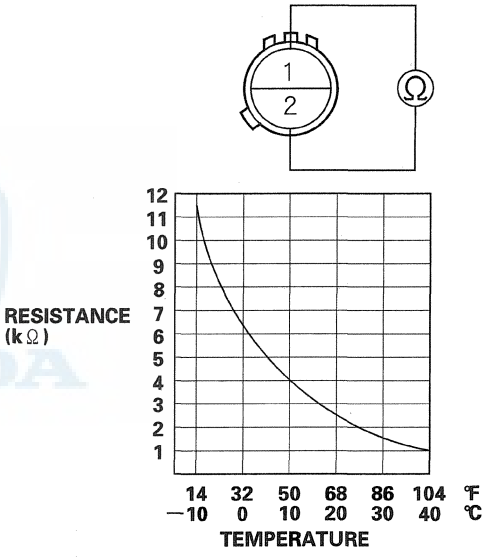

4. If the resistance is not as specified, replace the outside air temperature sensor (see page 21-74).

Outside Air Temperature Sensor Replacement

1. Disconnect the 2P connector (A) from the outside air temperature sensor.

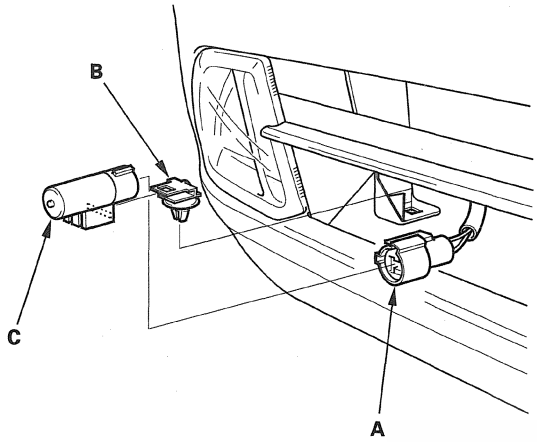

2. Remove the sensor clip (B), then remove the outside air temperature sensor (C).
3. Install the sensor in the reverse order of removal.

Sunlight Sensor Test

1. Remove the sunlight sensor from the dashboard (see page 21-75).
2. Connect the sunlight sensor 5P connector.

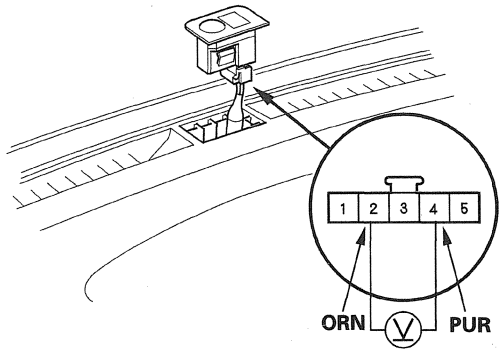

3. Turn the ignition switch to ON (II). Measure the voltage between the terminals with the (+) probe on terminal No. 4 and the (−) probe on terminal No. 2 with the 4P connector connected.

   NOTE: The voltage readings will not change under the light of a flashlight or a fluorescent lamp.

   Voltage should be:

   - 3.6—3.7 V or more with the sensor out of direct sunlight.
   - 3.3—3.5 V or less with the sensor in direct sunlight.

4. If the voltage is not as specified, replace the sunlight sensor (see page 21-75).

Sunlight Sensor Replacement

1. Remove the sunlight sensor (A) from the dashboard, then disconnect the 5P connector (B). Be careful not to damage the sensor and the dashboard.

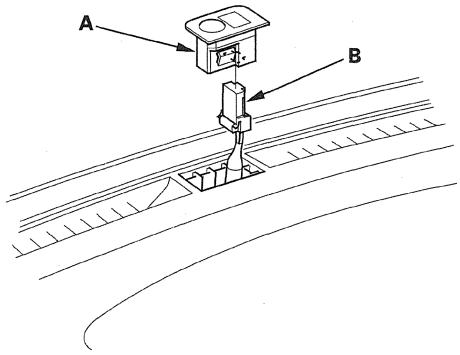

2. Install the sensor in the reverse order of removal.

Evaporator Temperature Sensor Test

1. Remove the evaporator temperature sensor (see page 21-76).

2. Dip the sensor in ice water, and measure the resistance between its terminals.

EVAPORATOR TEMPERATURE SENSOR

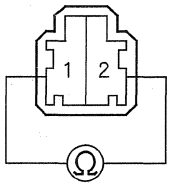

Tarminal side of male terminals

3. Pour warm water on the sensor, and check for a change in resistance.

4. Compare the resistance readings with the specifications shown in the graph; the resistance should be within the specifications.

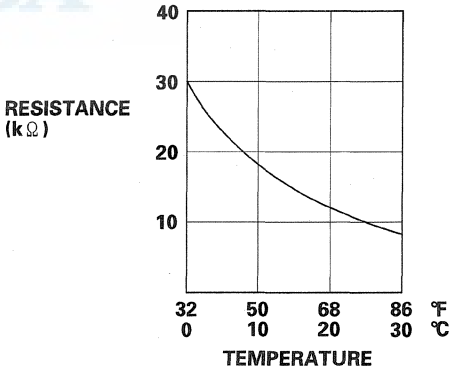

5. If the resistance is not as specified, replace the evaporator temperature sensor (see page 21-76).

Evaporator Temperature Sensor Replacement

1. Remove the driver's dashboard undercover (see page 20-100).

2. Disconnect the connectors (A) from the adaptive front lighting control unit, the electronically controlled power steering control unit, and the daytime running lights control unit. Remove the relay (B), the bolt, and the self-tapping screws, then remove the bracket (C).

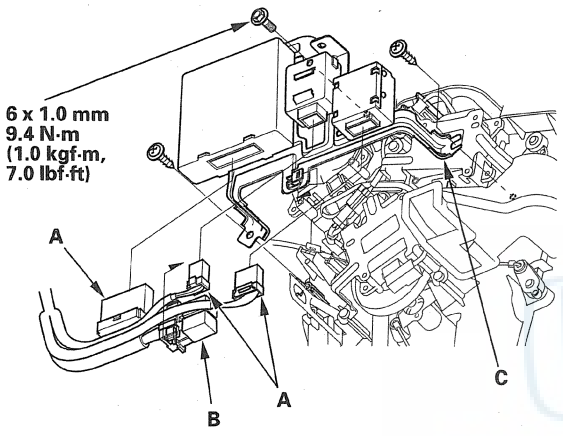

3. Disconnect the connectors (A) from the evaporator temperature sensor and the driver's cool vent control motor, then remove the connector clip (B). Remove the self-tapping screw and the evaporator temperature sensor (C).

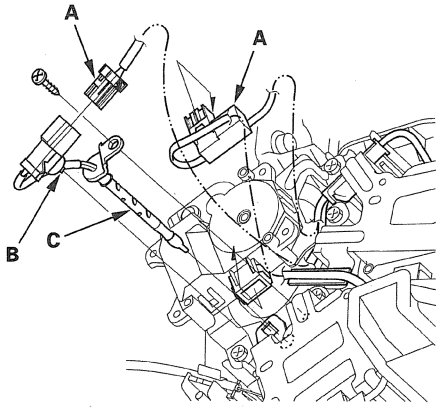

4. Install the sensor in the reverse order of removal.

Power Transistor Test

1. Remove the passenger's dashboard undercover (see page 20-102).

2. Disconnect the 5P connector from the power transistor.

3. Measure the resistance between terminals No. 1 and No. 4 of the power transistor. It should be about 1.5 kΩ.

   - If the resistance is within the specifications, go to step 4.
   - If the resistance is not within the specifications, replace the power transistor.

   NOTE: Also check the blower motor. Power transistor failure can be caused by a defective blower motor.

POWER TRANSISTOR

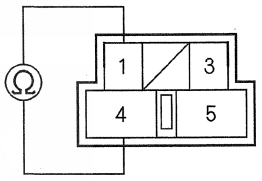

4. Carefully release the lock tab on terminal No. 3 (RED/BLK) (A) in the 5P connector, then remove the terminal and insulate it from body ground.

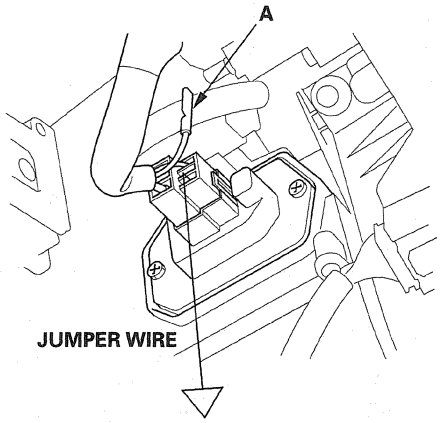

5. Reconnect the 5P connector to the power transistor.
6. Make sure the RED/BLK wire is completely isolated, then supply 12 V to cavity No. 3 with a jumper wire.
7. Turn the ignition switch to ON (II), and check that the blower motor runs.
   - If the blower motor does not run, replace the power transistor.

     NOTE: A faulty blower motor can cause the power transistor to fail. If the power transistor is replaced, also check the blower motor for binding, and replace it if necessary.
   - If the blower motor runs, the power transistor is OK.

Driver's Air Mix Control Motor Test

NOTE: Before testing, check for HVAC DTCs (see page 21-10).

1. Disconnect the 5P connector from the driver's air mix control motor.

   NOTICE
   Incorrectly applying power and ground to the driver's air mix control motor will damage it. Follow the instructions carefully.

2. Connect battery power to terminal No. 1 of the driver's air mix control motor, and ground terminal No. 2; the driver's air mix control motor should run, and stop at Max Cool. If it doesn't, reverse the connections; the driver's air mix control motor should run, and stop at Max Hot.

DRIVER'S AIR MIX CONTROL MOTOR

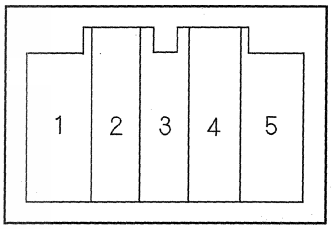

3. If the driver's air mix control motor did not run in step 2, remove it, then check the driver's air mix control linkage and the door for smooth movement.
   - If the linkage and the door move smoothly, replace the driver's air mix control motor (see page 21-78).
   - If the linkage or the door sticks or binds, repair them as needed.

Driver's Air Mix Control Motor Replacement

1. Remove the driver's dashboard undercover (see page 20-100).

2. Disconnect the connectors (A) from the adaptive front lighting control unit, the electronically controlled power steering control unit, and the daytime running lights control unit. Remove the relay (B), the bolt, and the self-tapping screws, then remove the bracket (C).

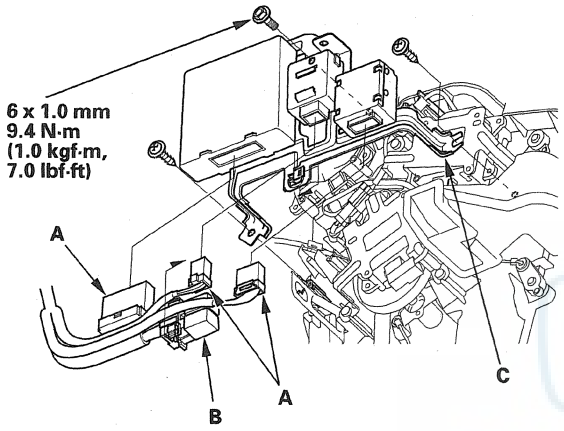

3. Disconnect the 5P connector (A) from the driver's air mix control motor. Remove the connector clip (B). Remove the self-tapping screws and the driver's air mix control motor (C).

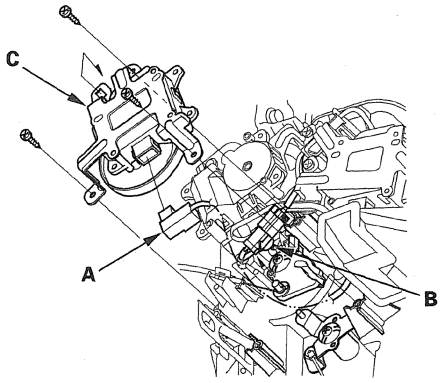

4. Install the motor in the reverse order of removal. Make sure the pin on the motor is properly engaged with the linkage. After installation, make sure the motor runs smoothly.

Passenger's Air Mix Control Motor Test

NOTE: Before testing, check for HVAC DTCs (see page 21-10).

1. Disconnect the 5P connector from the passenger's air mix control motor.

NOTICE

Incorrectly applying power and ground to the passenger's air mix control motor will damage it. Follow the instructions carefully.

2. Connect battery power to terminal No. 1 of the passenger's air mix control motor, and ground terminal No. 2; the passenger's air mix control motor should run, and stop at Max Hot. If it doesn't, reverse the connections; the passenger's air mix control motor should run, and stop at Max Cool.

PASSENGER'S AIR MIX CONTROL MOTOR

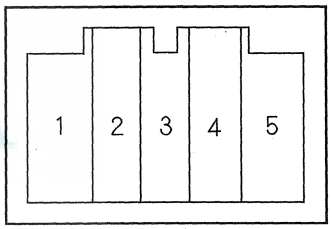

3. If the passenger's air mix control motor did not run in step 2, remove it, then check the passenger's air mix control linkage and the door for smooth movement.

- If the linkage and the door move smoothly, replace the passenger's air mix control motor (see page 21-79).
- If the linkage or the door sticks or binds, repair them as needed.

Passenger's Air Mix Control Motor Replacement

1. Remove the glove box (see page 20-103).
2. Remove the USB adapter unit (see page 23-114).
3. Disconnect the 5P connector (A) from the passenger's air mix control motor. Remove the self-tapping screws and the passenger's air mix control motor (B) from the heater unit.

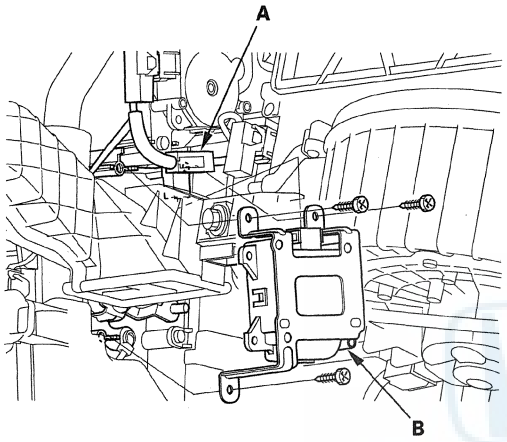

4. Install the motor in the reverse order of removal. Make sure the pin on the motor is properly engaged with the linkage. After installation, make sure the motor runs smoothly.

Driver's Cool Vent Control Motor Test

NOTE: Before testing, check for HVAC DTCs (see page 21-10).

1. Disconnect the 5P connector from the driver's cool vent control motor.

NOTICE
Incorrectly applying power and ground to the driver's cool vent control motor will damage it. Follow the instructions carefully.

2. Connect battery power to terminal No. 1 of the driver's cool vent control motor, and ground terminal No. 2; the driver's cool vent control motor should run, and stop at Open. If it doesn't, reverse the connections; the driver's cool vent control motor should run, and stop at Shut.

DRIVER'S COOL VENT CONTROL MOTOR

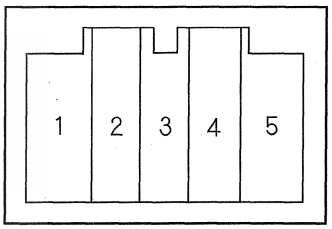

3. If the driver's cool vent control motor did not run in step 2, remove it, then check the driver's cool vent control linkage and the door for smooth movement.
   - If the linkage and the door move smoothly, replace the driver's cool vent control motor (see page 21-80).
   - If the linkage or the door sticks or binds, repair them as needed.

Driver's Cool Vent Control Motor Replacement

1. Remove the driver's dashboard undercover (see page 20-100).

2. Disconnect the connectors (A) from the adaptive front lighting control unit, the electronically controlled power steering control unit, and the daytime running lights control unit. Remove the relay (B), the bolt, and the self-tapping screws, then remove the bracket (C).

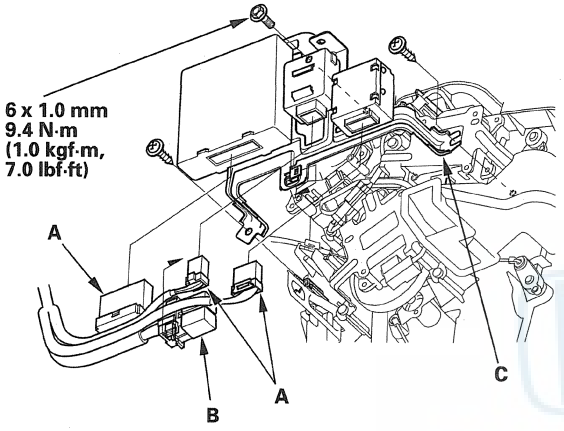

3. Disconnect the 5P connector (A) from the driver's cool vent control motor. Remove the self-tapping screws and the driver's cool vent control motor (B).

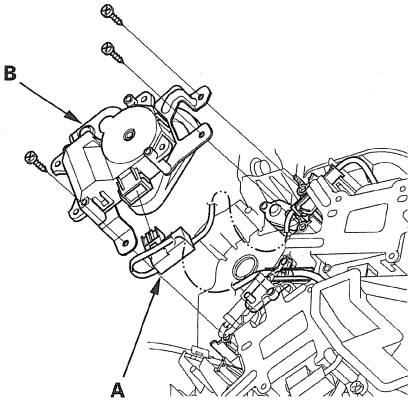

4. Install the motor in the reverse order of removal. Make sure the pin on the motor is properly engaged with the linkage. After installation, make sure the motor runs smoothly.

Passenger's Cool Vent Control Motor Test

NOTE: Before testing, check for HVAC DTCs (see page 21-10).

1. Disconnect the 5P connector from the passenger's cool vent control motor.

NOTICE

Incorrectly applying power and ground to the passenger's cool vent control motor will damage it. Follow the instructions carefully.

2. Connect battery power to terminal No. 1 of the passenger's cool vent control motor, and ground terminal No. 2; the passenger's cool vent control motor should run, and stop at Shut. If it doesn't, reverse the connections; the passenger's cool vent control motor should run, and stop at Open.

PASSENGER'S COOL VENT CONTROL MOTOR

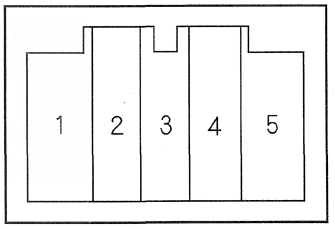

3. If the passenger's cool vent control motor did not run in step 2, remove it, then check the passenger's cool vent control linkage and the door for smooth movement.

- If the linkage and the door move smoothly, replace the passenger's cool vent control motor (see page 21-81).
- If the linkage or the door sticks or binds, repair them as needed.

Passenger's Cool Vent Control Motor Replacement

1. Remove the glove box (see page 20-103).
2. Remove the USB adapter unit (see page 23-114).
3. Disconnect the 5P connector (A) from the passenger's cool vent control motor. Remove the self-tapping screws and the passenger's cool vent control motor (B) from the heater unit.

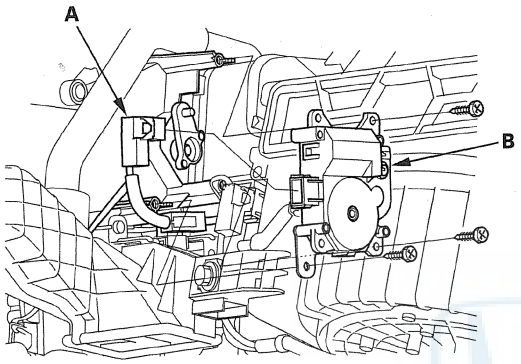

4. Install the motor in the reverse order of removal. Make sure the pin on the motor is properly engaged with the linkage. After installation, make sure the motor runs smoothly.

Mode Control Motor Test

NOTE: Before testing, check for HVAC DTCs (see page 21-10).

1. Disconnect the 5P connector from the mode control motor.

NOTICE
Incorrectly applying power and ground to the mode control motor will damage it. Follow the instructions carefully.

2. Connect battery power to terminal No. 1 of the mode control motor, and ground terminal No. 2; the mode control motor should run smoothly, and stop at Vent. If it doesn't, reverse the connections; the mode control motor should run smoothly, and stop at Defrost. When the mode control motor stops running, disconnect battery power immediately.

MODE CONTROL MOTOR

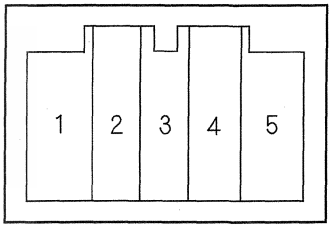

3. If the mode control motor did not run in step 2, remove it, then check the mode control linkage and the doors for smooth movement.
   - If the linkage and the doors move smoothly, replace the mode control motor (see page 21-82).
   - If the linkage or the doors stick or bind, repair them as needed.

Mode Control Motor Replacement

1. Remove the driver's dashboard undercover (see page 20-100).

2. Disconnect the connectors (A) from the power tilt/telescopic steering control unit, the adaptive front lighting control unit, the electronically controlled power steering control unit, and the daytime running lights control unit. Remove the relay (B) and the power tilt/telescopic steering control unit (C), then remove the self-tapping screws and the bracket (D).

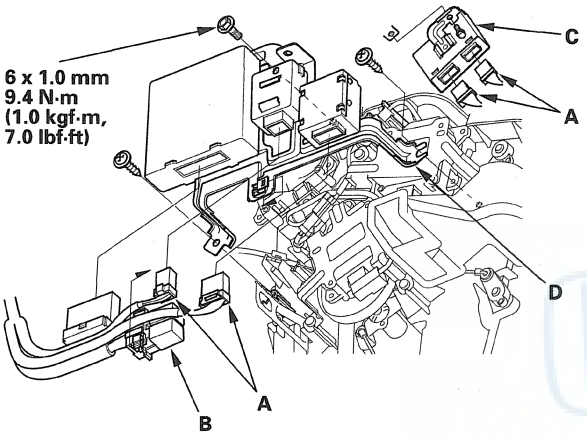

3. Remove the driver's air mix control motor (see page 21-78).

4. Disconnect the 5P connector (A) from the mode control motor. Remove the harness clips (B). Remove the self-tapping screws and the mode control motor (C).

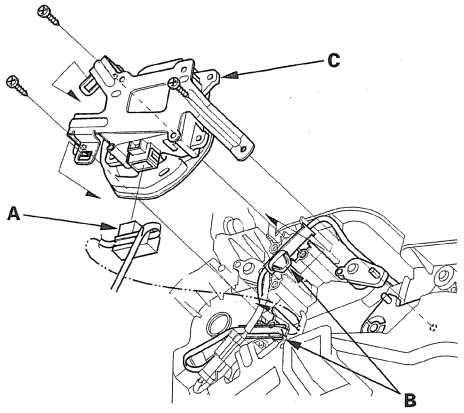

5. Install the motor in the reverse order of removal. Make sure the pin on the motor is properly engaged with the linkage. After installation, make sure the motor runs smoothly.

Recirculation Control Motor Test

NOTE: Before testing, check for HVAC DTCs (see page 21-10).

1. Disconnect the 5P connector from the recirculation control motor.

NOTICE

Incorrectly applying power and ground to the recirculation control motor will damage it. Follow the instructions carefully.

2. Connect battery power to terminal No. 1 of the recirculation control motor, and ground terminal No. 2; the recirculation control motor should run, and stop at Recirculate. If it doesn't, reverse the connections; the recirculation control motor should run, and stop at Fresh.

RECIRCULATION CONTROL MOTOR

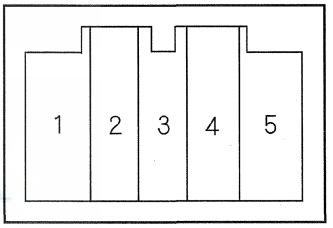

3. If the recirculation control motor did not run in step 2, remove it, then check the recirculation control linkage and the door for smooth movement.

   - If the linkage and the door move smoothly, replace the recirculation control motor (see page 21-83).
   - If the linkage or the door stick or bind, repair them as needed.

Recirculation Control Motor Replacement

1. Remove the glove box (see page 20-103).
2. Remove the USB adapter unit (see page 23-114).
3. Disconnect the 5P connector (A) from the recirculation control motor (B). Remove the self-tapping screws and the recirculation control motor from the blower unit.

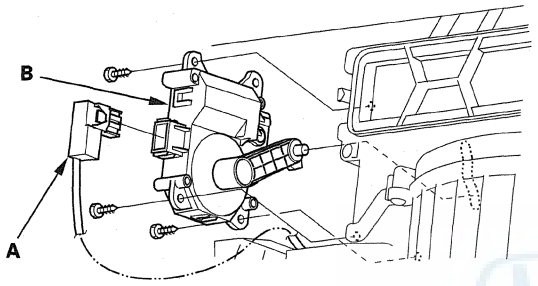

4. Install the motor in the reverse order of removal. Make sure the pin on the motor is properly engaged with the linkage. After installation, make sure the motor runs smoothly.

Rear Vent Control Motor Test

NOTE: Before testing, check for HVAC DTCs (see page 21-10).

1. Disconnect the 5P connector from the rear vent control motor.

NOTICE

Incorrectly applying power and ground to the rear vent control motor will damage it. Follow the instructions carefully.

2. Connect battery power to terminal No. 1 of the rear vent control motor, and ground terminal No. 2; the rear vent control motor should run, and stop at Shut. If it doesn't, reverse the connections; the rear vent control motor should run, and stop at Rear Vent.

REAR VENT CONTROL MOTOR

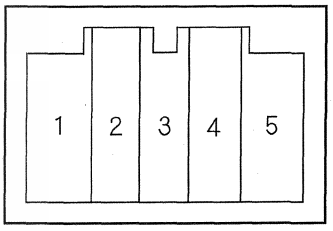

3. If the rear vent control motor did not run in step 2, remove it, then check the rear vent control linkage and the door for smooth movement.
   - If the linkage and the door move smoothly, replace the rear vent control motor (see page 21-84).
   - If the linkage or the door sticks or binds, repair them as needed.

Rear Vent Control Motor Replacement

1. Remove the utility pocket (see page 20-97).
2. Remove the center console (see page 20-92). Remove the rear vent duct (see step 5 on page 20-110).
3. Remove the shift lever (see page 14-230).
4. Disconnect the 5P connector (A) and the duct (B).

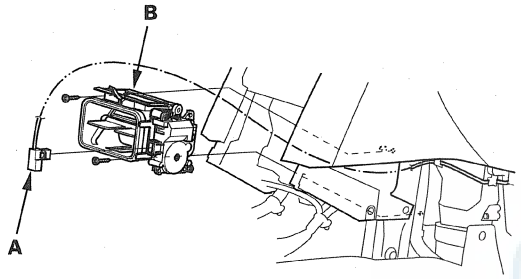

5. Remove the self-tapping screws and the rear vent control motor (A).

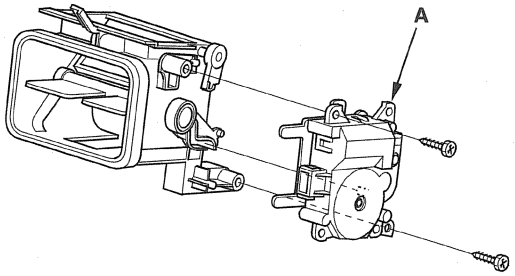

6. Install the motor in the reverse order of removal. Make sure the pin on the motor is properly engaged with the linkage. After installation, make sure the motor runs smoothly.

Climate Control Unit Removal/ Installation

1. Remove the audio unit (see page 23-106).
2. Remove the self-tapping screws and the climate control unit (A).

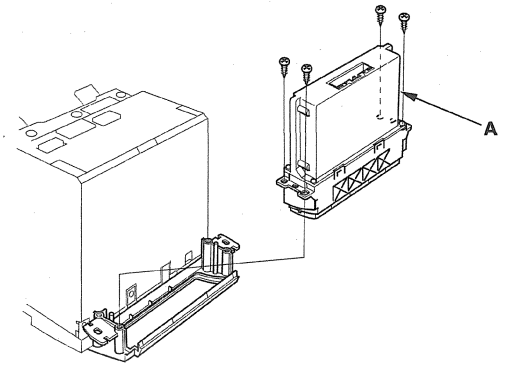

3. Discharge the static electricity (which accumulated on you when you removed the climate control unit) by touching the door striker or other body parts.
4. Remove the self-tapping screws, then carefully separate the climate control unit (A) from the climate control panel (B). Disconnect the connector (C) from the climate control unit. Do not kink or pull on the wires between the control panel and the control unit. Do not touch the electronic components on the printed circuit board in the control unit and the control panel.

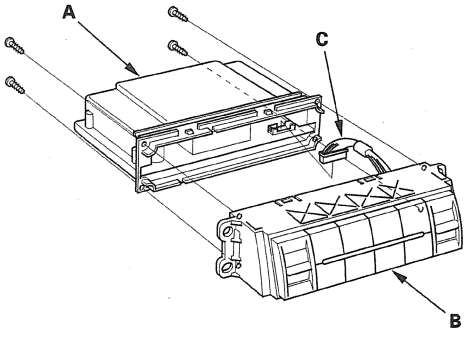

5. Install the control unit in the reverse order of removal. After installation, operate the various functions to see whether it works properly.
6. Run the self-diagnostic function to confirm that there are no problems in the system (see page 21-10).

Dust and Pollen Filter Replacement

1. Remove the glove box (see page 20-103).
2. Remove the dust and pollen filter assembly (A) from the blower unit.

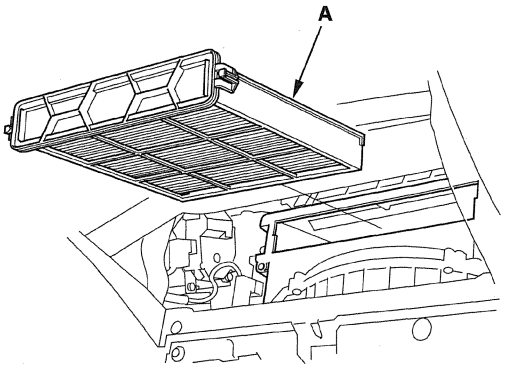

3. Remove the filter (A) from the housing (B), and replace the filter.

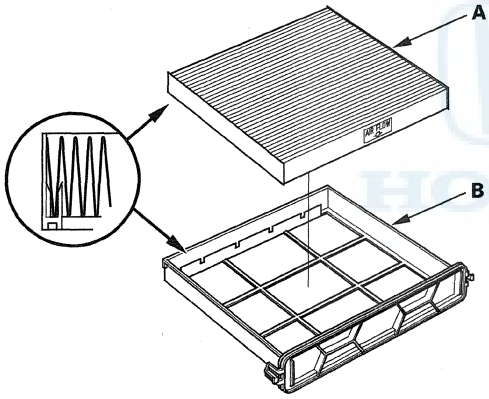

4. Install the filter in the reverse order of removal. Make sure that there is no air leaking out of the blower unit.

Blower Unit Removal/Installation

1. Remove the glove box (see page 20-103).
2. Remove the right kick panel (see page 20-67).
3. Remove the USB adapter unit (see page 23-114).
4. Cut the plastic cross brace (A) in the glove box opening with diagonal cutters in the area shown. Retain the plastic cross brace to be reinstalled later.

   NOTE: Use the grommets (B) and the self-tapping screws to reinstall the plastic cross brace.

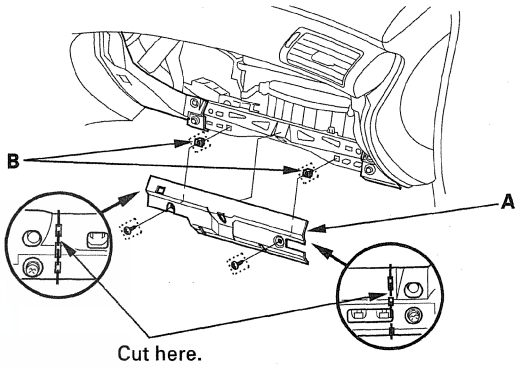

5. Remove the wire harness clips (A) and the connector clips (B). Remove the bolts and the glove box frame (C).

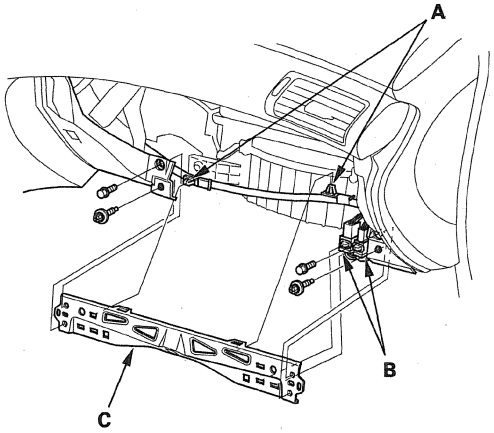

(cont'd)

Blower Unit Removal/Installation (cont'd)

6. Disconnect the connectors (A) from the blower motor, the throttle actuator control module subharness, and the dashboard wire harnesses. Remove the self-tapping screw (B), the connector clip (C) and the wire harness clips (D).

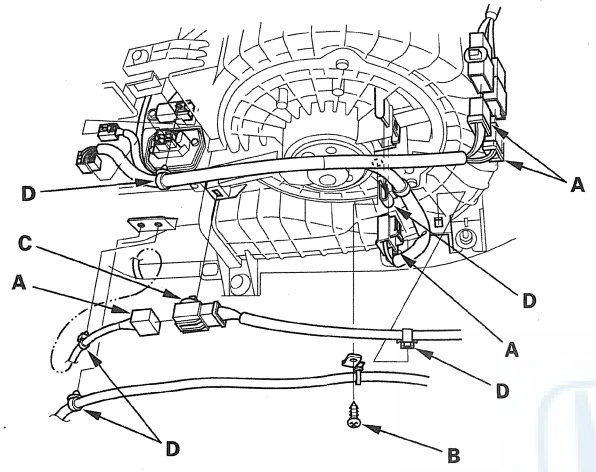

7. Disconnect the connector (A) from the recirculation control motor. Remove the mounting nuts, the bolts, and the blower unit (B).

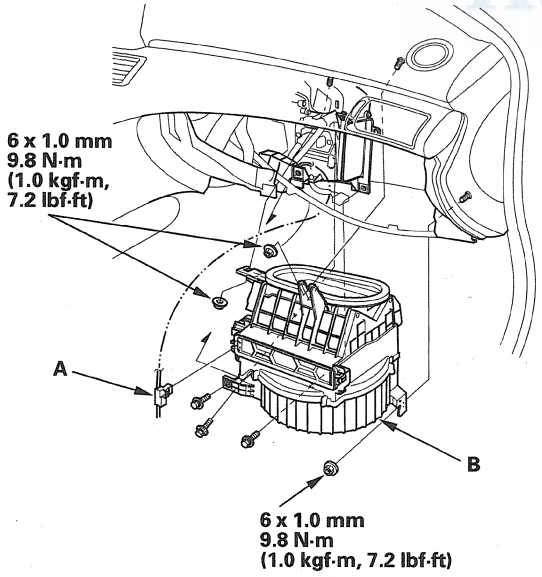

8. Install the unit in the reverse order of removal. Make sure that there is no air leakage.

Blower Unit Component Replacement

Note these items when overhauling the blower unit:

- The recirculation control motor (A), the blower motor (B), and the dust and pollen filter (C) can be replaced without removing the blower unit.
- Before reassembly, make sure that the recirculation control linkage and the door move smoothly without binding.
- After reassembly, make sure the recirculation control motor runs smoothly (see page 21-82).

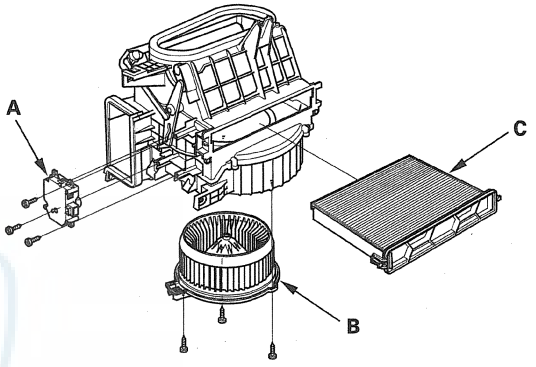

Evaporator Core Replacement

1. Recover the refrigerant with a recovery/recycling/charging station (see page 21-100).
2. Remove the engine cover (see page 4-21).
3. Remove the bolt, then disconnect the A/C lines (A) from the evaporator core.

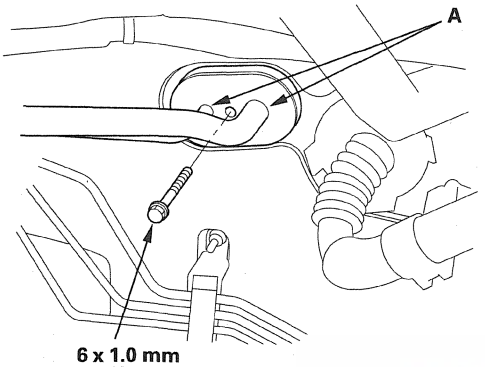

4. Remove the blower unit (see page 21-85).
5. Remove the self-tapping screws and the expansion valve cover (A), then remove the bolts and the expansion valve (B) without bending the lines.

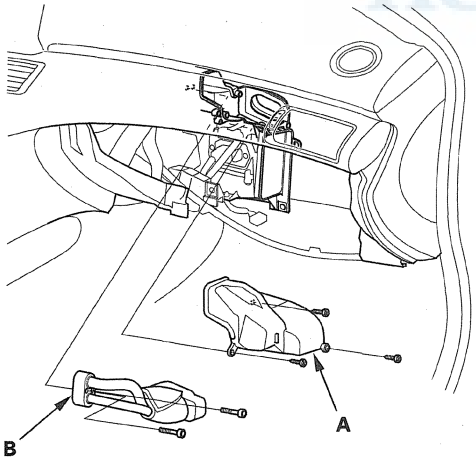

6. Disconnect the connectors (A) from the power transistor and the control motor relay. Remove the wire harness clip (B), then remove the joint duct (C).

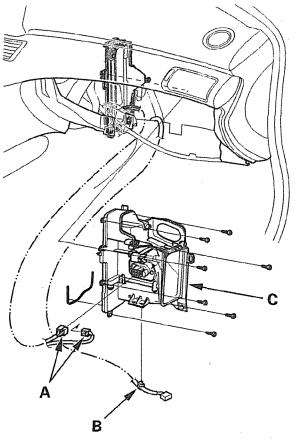

7. Carefully pull out the evaporator core (A) and the plate (B).

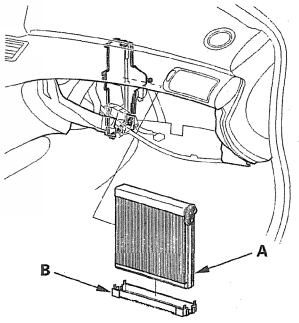

8. Install the core in the reverse order of removal, and note these items:
   - If you're installing a new evaporator core, add the appropriate amount of refrigerant oil (DENSO ND-OIL 8) (see page 21-6).
   - Replace the O-rings with new ones at each fitting, and apply a thin coat of refrigerant oil before installing them. Be sure to use the correct O-rings for HFC-134a (R-134a) to avoid leakage.
   - Immediately after using the oil, reinstall the cap on the container, and seal it to avoid moisture absorption.
   - Do not spill the refrigerant oil on the vehicle; it may damage the paint; if the refrigerant oil contacts the paint, wash it off immediately.
   - Make sure that there is no air leakage.
   - Charge the system (see page 21-102).

Expansion Valve Replacement

1. Recover the refrigerant with a recovery/recycling/charging station (see page 21-100).
2. Remove the engine cover (see page 4-21).
3. Remove the bolt, then disconnect the A/C lines (A) from the evaporator core.

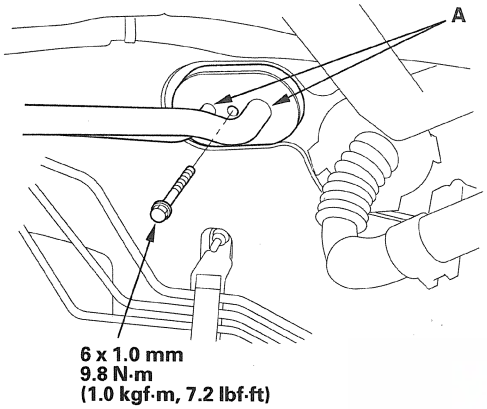

4. Remove the blower unit (see page 21-85).
5. Remove the self-tapping screws and the expansion valve cover (A), then remove the bolts and the pipe (B) without bending the lines.

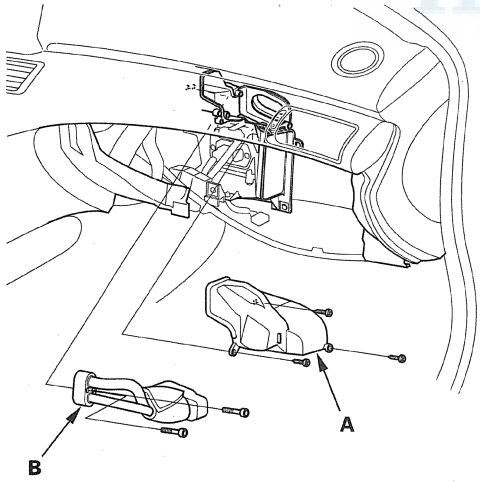

6. Remove the seals (A), the bolts, the O-rings (B), and the expansion valve (C) without bending the pipe.

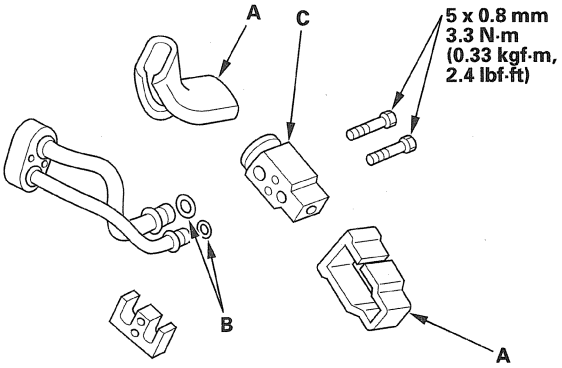

7. Install the valve in the reverse order of removal, and note these items:
   - Replace the O-rings with new ones at each fitting, and apply a thin coat of refrigerant oil before installing them. Be sure to use the correct O-rings for HFC-134a (R-134a) to avoid leakage.
   - Immediately after using the oil, reinstall the cap on the container, and seal it to avoid moisture absorption.
   - Do not spill the refrigerant oil on the vehicle; it may damage the paint; if the refrigerant oil contacts the paint, wash it off immediately.
   - Make sure that there is no air leakage.
   - Charge the system (see page 21-102).

Heater Unit/Core Replacement

SRS components are located in this area. Review the SRS component locations (see page 24-12) and the precautions and procedures (see page 24-14) before doing repairs or service.

1. Do the battery terminal disconnection procedure (see page 22-91).

2. Disconnect the A/C lines from the evaporator core (see page 21-87).

3. From under the hood open the cable clamp (A), then disconnect the heater valve cable (B) from the heater valve arm (C). Turn the heater valve arm to the fully opened position as shown.

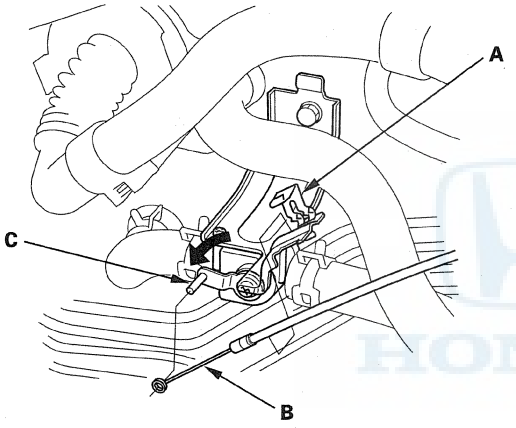

4. When the engine is cool, drain the engine coolant from the radiator (see page 10-6).

5. Slide the hose clamps (A) back. Remove the bolt and the water valve bracket, then disconnect the inlet heater hose (B) and the outlet heater hose (C) from the heater unit.
Engine coolant will run out when the hoses are disconnected; drain it into a clean drip pan. Be sure not to let coolant spill on the electrical parts or the painted surfaces. If any coolant spills, rinse it off immediately.

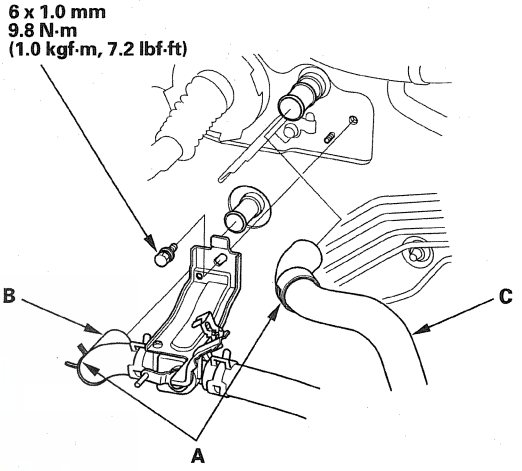

6. Remove the mounting nut from the heater unit. Take care not to damage or bend the fuel lines or the brake lines.

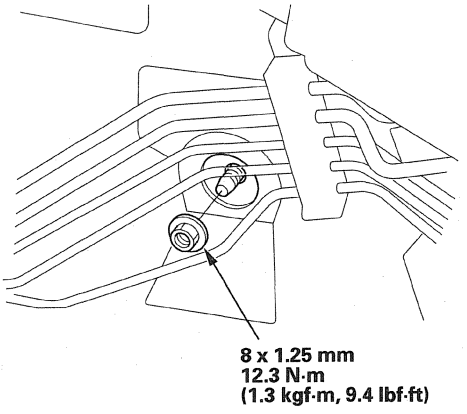

(cont'd)

Heater Unit/Core Replacement (cont'd)

7. Remove the dashboard (see page 20-107).

8. Disconnect the connectors (A) from the adaptive front lighting control unit, the electronically controlled power steering control unit, and the daytime running lights control unit. Remove the relay (B), the bolt, and the self-tapping screws, then remove the bracket (C).

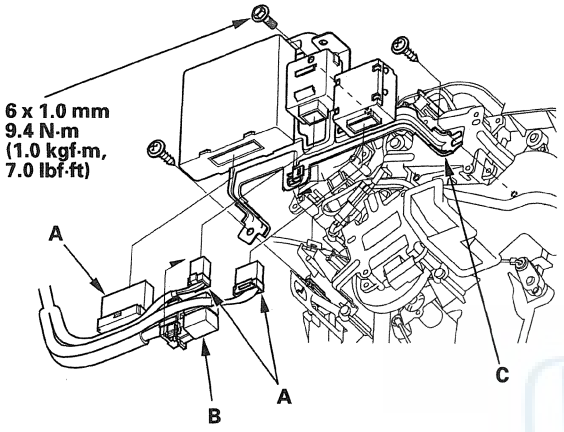

9. Disconnect the connectors (A) from the driver's cool vent control motor, the driver's air mix control motor, the mode control motor, and the evaporator temperature sensor, then remove the wire harness clips (B).

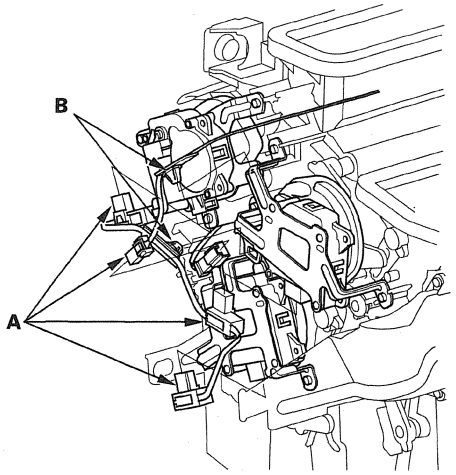

10. Disconnect the connectors (A) from the blower motor, the power transistor, the control motor relay, the throttle actuator control module subharness, and the dashboard wire harnesses. Remove the self-tapping screw (B), the connector clip (C) and the wire harness clips (D).

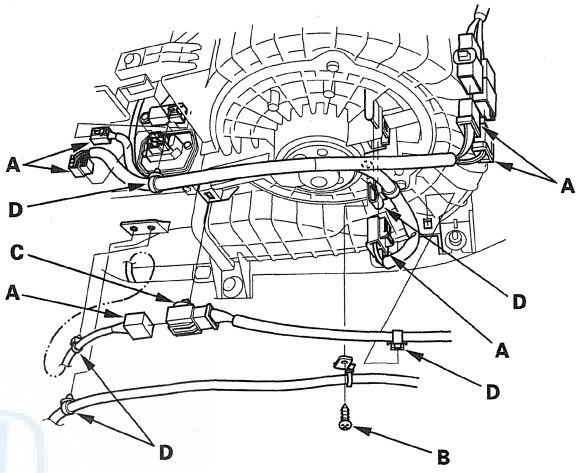

11. Disconnect the connectors (A) from the recirculation control motor, the passenger's cool vent control motor, the passenger's air mix control motor, and the rear vent control motor, and then remove the wire harness clip (B) and the wire harness (C).

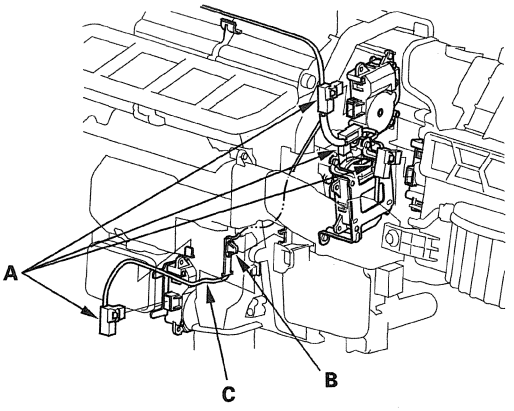

12. Remove the clips (A), the mounting nuts, and the blower-heater unit (B).

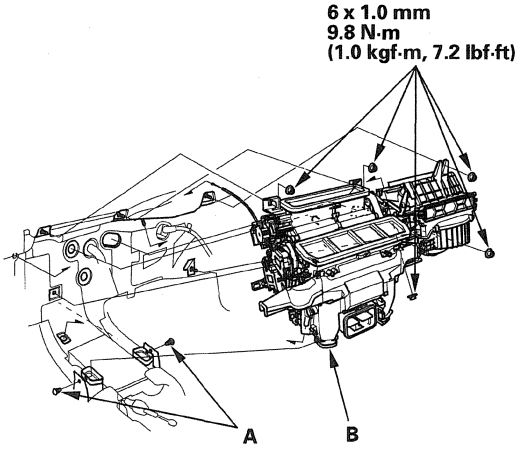

13. Remove the self-tapping screws and the passenger's heater duct (A), then remove the expansion valve cover (B), the bolts, and the expansion valve (C). Remove the self-tapping screws, the joint duct (D), and the heater core cover (E). Remove the self-tapping screws, the heater pipe brackets (F), and the grommets (G), then carefully pull out the heater core (H).

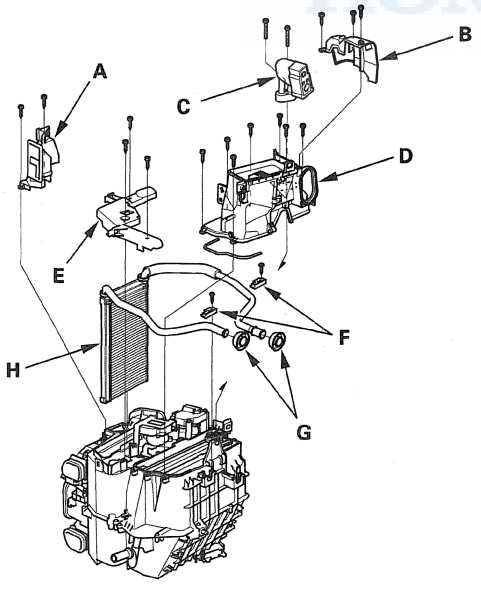

14. Install the heater core and the evaporator core in the reverse order of removal.

15. Install the heater unit in the reverse order of removal, and note these items:

    - Do not interchange the inlet and the outlet heater hoses, and install the hose clamps securely.
    - Refill the cooling system with engine coolant (see page 10-6).
    - Adjust the heater valve cable (see page 21-92).
    - Make sure that there is no coolant leakage.
    - Make sure that there is no air leakage.

16. Do the battery terminal reconnection procedure (see page 22-91).

HONDA

Heater Valve Cable Adjustment

1. From under the hood, open the cable clamp (A), then disconnect the heater valve cable (B) from the heater valve arm (C).

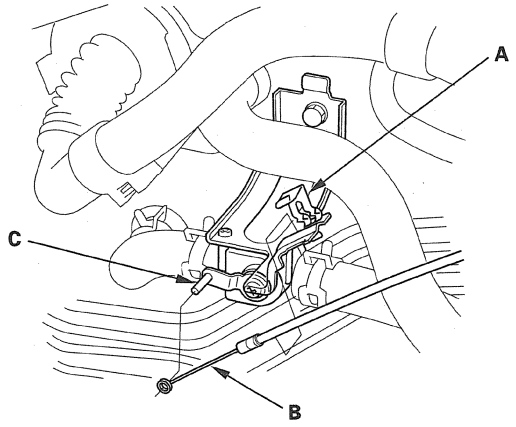

2. From under the dash, disconnect the heater valve cable housing from the cable clamp (A), and disconnect the heater valve cable (B) from the air mix control linkage (C).

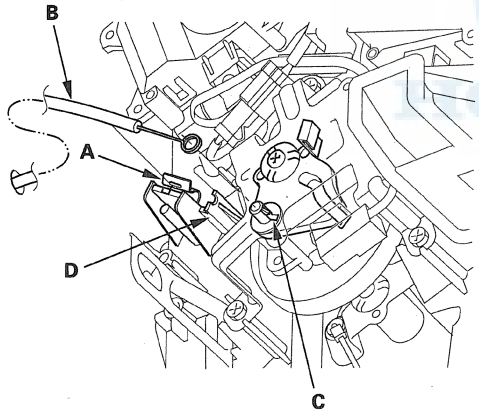

3. Set the temperature control button to Max Cool (Lo) with the ignition switch to ON (II).

4. Attach the heater valve cable (B) to the air mix control linkage (C) as shown in step 2. Hold the end of the heater valve cable housing against the stop (D), then snap the heater valve cable housing into the cable clamp (A).

   NOTE: Make sure the ring-end of the cable is pushed all the way to the base of the pin on the air mix control linkage.

5. From under the hood, turn the heater valve arm (A) to the fully closed position as shown, and hold it. Attach the heater valve cable (B) to the heater valve arm, and gently pull on the heater valve cable housing to take up any slack, then install the heater valve cable housing into the cable clamp (C).

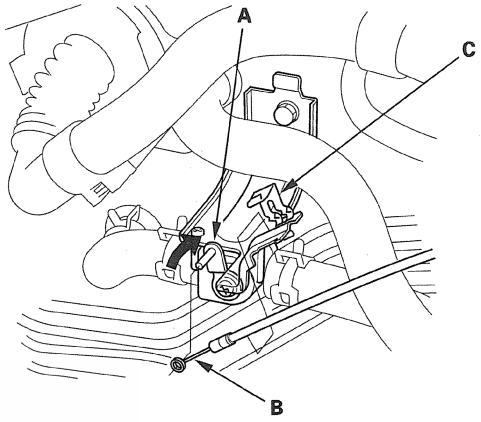

A/C Compressor Replacement

NOTE: Do not install the A/C compressor into a system unless you are completely sure that the system is free of contamination. Installing the A/C compressor into a contaminated system can result in premature A/C compressor failure.

1. If the A/C compressor is marginally operable, run the engine at idle speed, and let the air conditioning work for a few minutes, then shut the engine off.
2. Do the battery terminal disconnection procedure (see page 22-91).
3. Recover the refrigerant with a recovery/recycling/charging station (see page 21-100).
4. Remove the engine cover (see page 4-21), and the alternator (see page 4-36).
5. Disconnect the A/C compressor clutch connector (A). Remove the bolts and the nuts, then disconnect the suction hose (B) and the discharge hose (C) from the A/C compressor. Plug or cap the lines immediately after disconnecting them to avoid moisture and dust contamination.

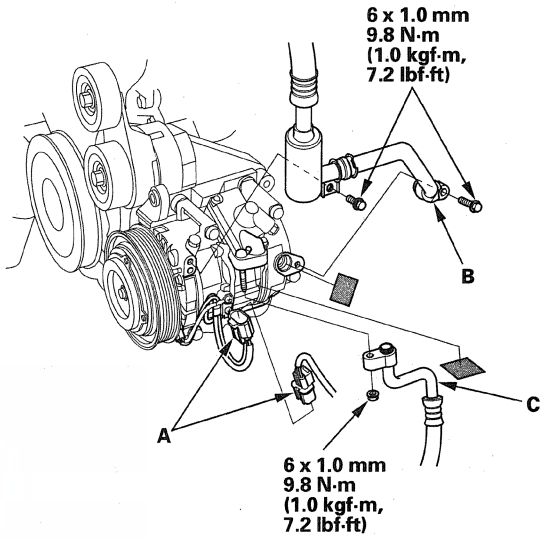

6. Remove the mounting bolts and the A/C compressor (A). Be careful not to damage the radiator fins when removing the compressor.

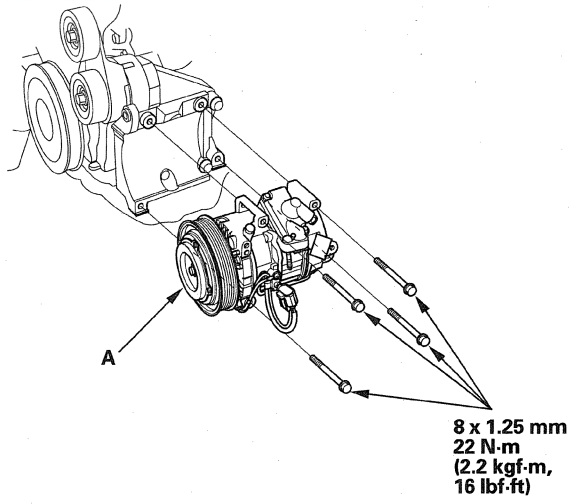

(cont'd)

A/C Compressor Replacement (cont'd)

7. Install the A/C compressor in the reverse order of removal, and note these items:
   - Inspect the A/C lines for any signs of contamination. Purge the system if necessary before installing the compressor.
   - If you're installing a new A/C compressor, you must calculate the amount of refrigerant oil to be removed from it (see page 21-6). A new A/C compressor comes with a full charge of oil.
   - Replace the O-rings with new ones at each fitting, and apply a thin coat of refrigerant oil before installing them. Be sure to use the correct O-rings for HFC-134a (R-134a) to avoid leakage.
   - Use only refrigerant oil (DENSO ND-OIL 8) for HFC-134a DENSO piston type A/C compressor only.
   - To avoid contamination, do not return the oil to the container once dispensed, and never mix it with other refrigerant oils.
   - Immediately after using the oil, reinstall the cap on the container, and seal it to avoid moisture absorption.
   - Do not spill the refrigerant oil on the vehicle; it may damage the paint; if the refrigerant oil contacts the paint, wash it off immediately.
   - Be careful not to damage the radiator fins when installing the compressor and the A/C condenser fan shroud.
   - Charge the system (see page 21-102).
8. Do the battery terminal reconnection procedure (see page 22-91).

A/C Compressor Clutch Check

1. Check the pressure plate for discoloration, peeling, or other damage. If there is damage, replace the clutch set (see page 21-95).
2. Check the pulley bearing play and drag by rotating the pulley by hand. Also check for grease leakage from the bearing. Replace the clutch set with a new one if it is noisy, has excessive play/drag, or has bearing grease contamination on the clutch faces (see page 21-95).

   NOTE: The pulley and the pressure plate were mated at the factory by a burnishing operation. Always replace the pulley and the pressure plate as a set. Replacing only one part of the clutch set will cause clutch slippage.

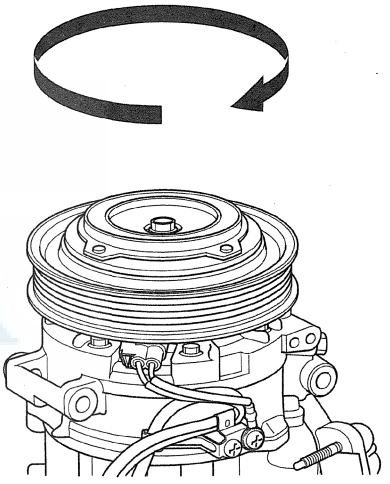

3. Measure the clearance between the pulley (A) and the pressure plate (B) all the way around. If the clearance is not within specified limits, remove the pressure plate (see page 21-95) and add or remove shims as needed to increase or decrease clearance.

   Clearance: 0.26—0.60 mm (0.010—0.024 in.)

   NOTE: The shims are available in three thicknesses: 0.1 mm, 0.3 mm, and 0.5 mm.

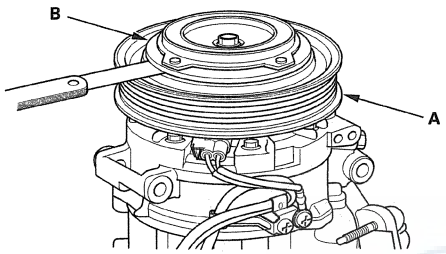

4. Remove the pressure plate (see page 21-95), and inspect the pressure plate and pulley friction surface for wear. If there is excessive wear, roughness, or scoring, replace the clutch set.

5. Inspect the friction surfaces and the A/C compressor shaft hub for excess oil. If excess oil is present, and it is not from the engine or power steering system, then the A/C compressor shaft seal is leaking. In the case, replace the A/C compressor (see page 21-93).

6. Measure the resistance of the field coil. If the resistance is not within specifications, replace the field coil (see page 21-95).

   Field Coil Resistance: 3.9—4.3 Ω at 68°F (20 °C)

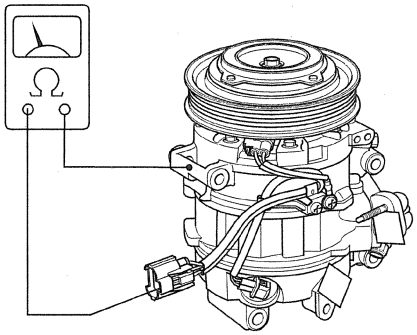

Special Tools Required
A/C clutch holder: Robinair 10290, Kent-Moore J37872, Honda Tool and Equipment ACT499A, or commercially available

1. Remove the center bolt while holding the pressure plate (A) with a commercially available A/C clutch holder (B).

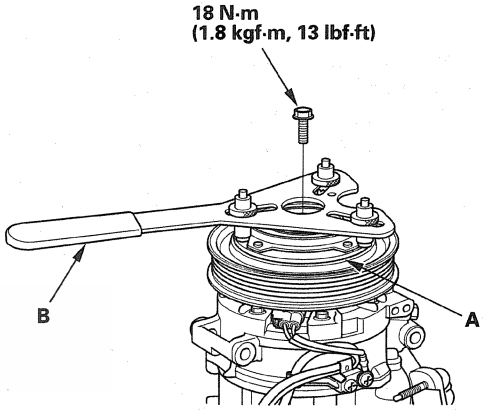

(cont'd)

A/C Compressor Clutch Overhaul (cont'd)

2. Remove the pressure plate (A) and the shim(s) (B), taking care not to lose the shim(s). If the clutch needs adjustment, increase or decrease the number and thickness of shims as necessary, then reinstall the pressure plate, and recheck its clearance (see step 3 on page 21-95).

   NOTE:
   - The shims are available in three thicknesses: 0.1 mm, 0.3 mm, and 0.5 mm.
   - Do not pry on the pressure plate with screwdrivers or similar tools. Prying damages the pressure plate and the pulley.
   - When replacing the clutch set, place a trial stack of shims, 1 mm total thickness, on the A/C compressor shaft. Install the pressure plate, and check its clearance (see step 3 on page 21-95). If the clearance is not with specification, add or subtract shims as needed.

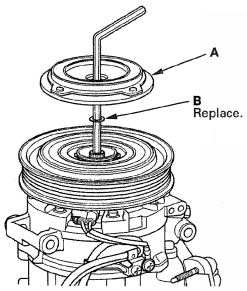

3. Remove the snap ring (A) with snap ring pliers, then remove the pulley (B). Be careful not to damage the pulley or the A/C compressor.

   NOTE:
   - Do not use a hammer to remove the snap rings. Using a hammer damages the A/C compressor.
   - Do not hammer or pry on the pulley to remove it. If the pulley is difficult to remove, use a commercially available pulley removing tool. Make sure the jaws of the pulling tool engage the back face of the pulley, not the pulley grooves.

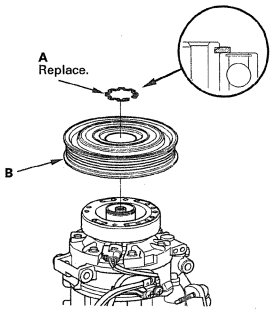

4. Remove the screws from the field coil ground terminal (A) and the bracket (B). Disconnect the connectors (C) from the field coil and the variable capacity control solenoid valve, then remove the wire harness (D). Remove the snap ring (E) with snap ring pliers, then remove the field coil (F). Be careful not to damage the field coil or the A/C compressor.

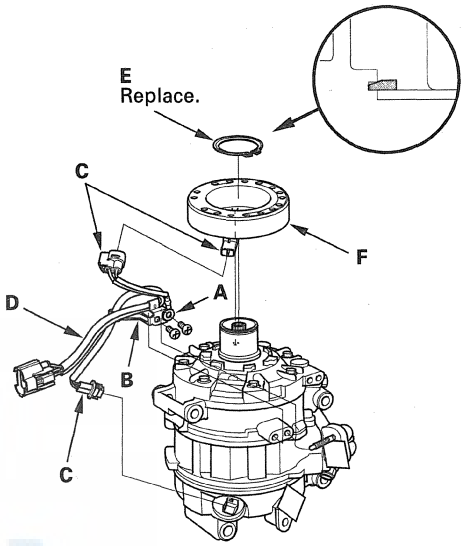

5. Reassemble the clutch in the reverse order of disassembly, and note these items:

   - When replacing the field coil, check that the new coil has the correct resistance (see step 6 on page 21-95).
   - Install the field coil with the wire side facing down, and align the boss on the field coil with the hole in the A/C compressor.
   - Clean the pulley and A/C compressor sliding surfaces with contact cleaner or other non-petroleum solvent.
   - Install new snap rings, note the installation direction, and make sure they are fully seated in the grooves.
   - Make sure that the pulley turns smoothly after it's reassembled.
   - Route and clamp the wires properly to prevent damage by the pulley.

6. Cycle the A/C by running the engine at 1,500—2,000 rpm and setting the climate control temperature to Lo with the A/C button ON. This procedure seats the clutch friction surfaces, and increases clutch torque capacity.

A/C Compressor Relief Valve Replacement

NOTE: If the A/C compressor relief valve released refrigerant to the atmosphere, determine and correct the cause of the excessive system pressure, then replace the relief valve.

1. Recover the refrigerant with a recovery/recycling/charging station (see page 21-100).
2. Remove the relief valve (A) and the O-ring (B). Plug the opening to keep foreign matter from entering the system and the A/C compressor oil from running out.

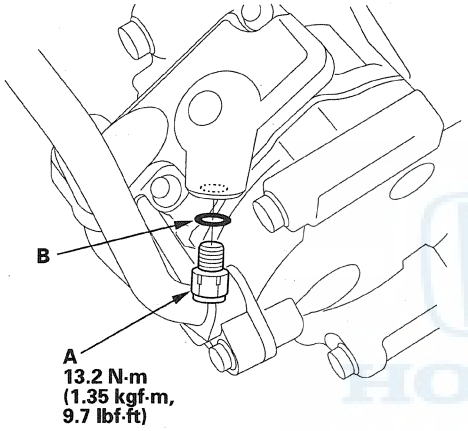

3. Clean the mating surfaces.
4. Replace the O-ring with a new one at the relief valve, and apply a thin coat of refrigerant oil before installing it.
5. Remove the plug, and install and tighten the relief valve.
6. Charge the system (see page 21-102).

A/C Condenser Replacement

1. Recover the refrigerant with a recovery/recycling/charging station (see page 21-100).
2. Remove the upper grille cover (see page 20-163).
3. Do the battery terminal disconnection procedure (see page 22-91).
4. Remove the battery and the battery box.
5. Remove the clip (A) and the harness (B), then remove the air intake ducts (C).

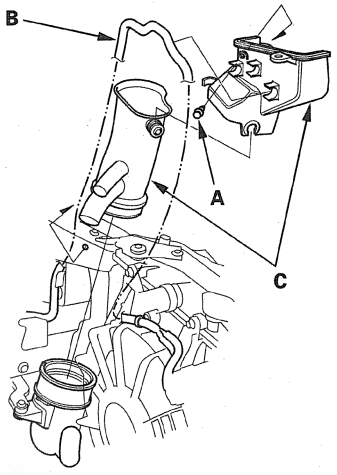

6. Remove the bolt, then disconnect the receiver line (A) from the A/C condenser.

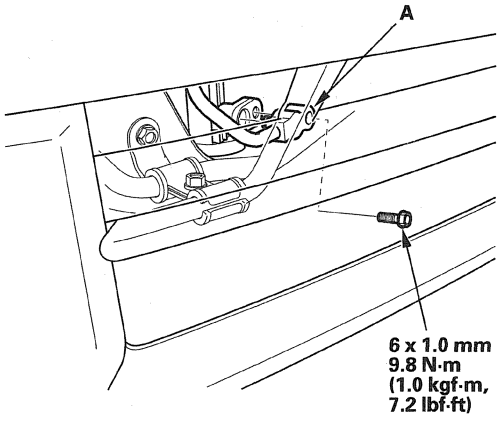

(cont'd)

A/C Condenser Replacement (cont'd)

7. Remove the bolt, then disconnect the discharge hose (A) from the A/C condenser.

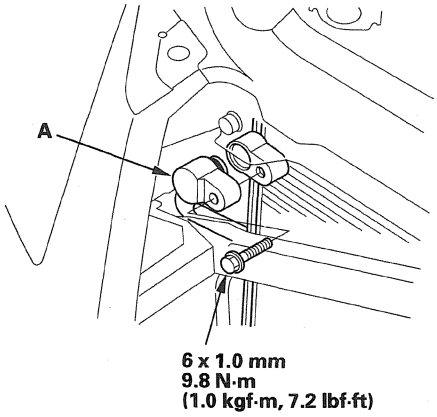

8. Remove the bolts and the radiator upper mount brackets (A).

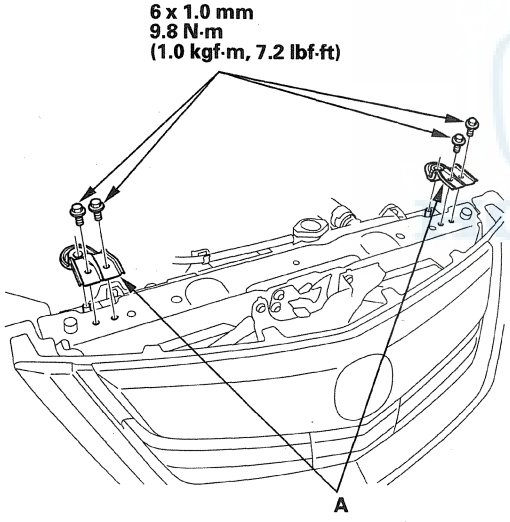

9. Remove the bolts and the A/C condenser upper mount brackets (A).

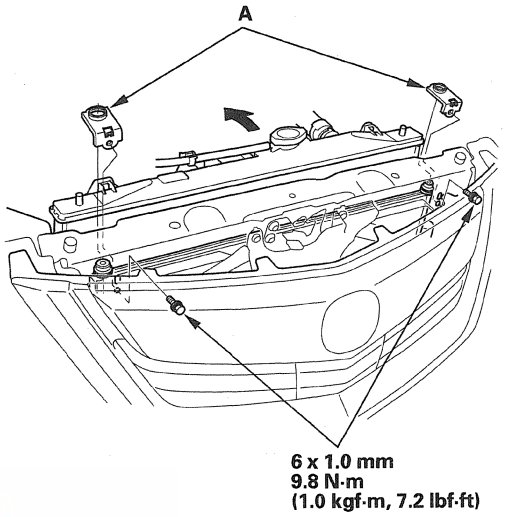

10. Remove the A/C condenser (A) by lifting it up. Be careful not to damage the radiator or the condenser fins when removing the condenser.

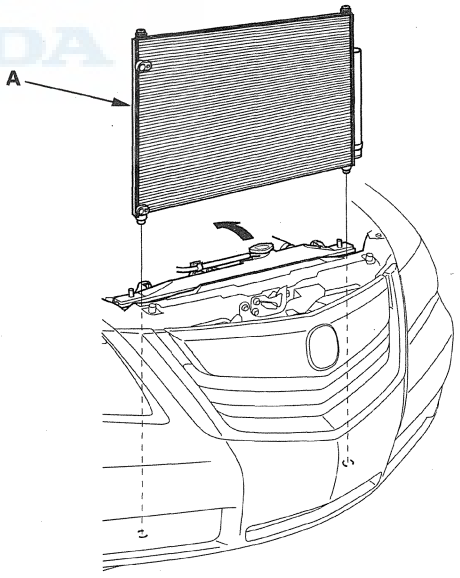

11. Install the A/C condenser in the reverse order of removal, and note these items:

    - If you're installing a new A/C condenser, add refrigerant oil (DENSO ND-OIL 8) (see page 21-6).
    - Replace the O-rings with new ones at each fitting, and apply a thin coat of refrigerant oil before installing them. Be sure to use the correct O-rings for HFC-134a (R-134a) to avoid leakage.
    - Immediately after using the oil, reinstall the cap on the container, and seal it to avoid moisture absorption.
    - Do not spill the refrigerant oil on the vehicle; it may damage the paint; if the refrigerant oil contacts the paint, wash it off immediately.
    - Charge the system (see page 21-102).

12. Do the battery terminal reconnection procedure (see page 22-91).

Receiver/Dryer Desiccant Replacement

NOTE: Install the receiver/dryer as quickly as possible to prevent the system from absorbing moisture from the air.

1. Remove the A/C condenser (see page 21-97).

2. Remove the cap (A) from the bottom of the A/C condenser. Remove the O-ring (B) and the desiccant (C).

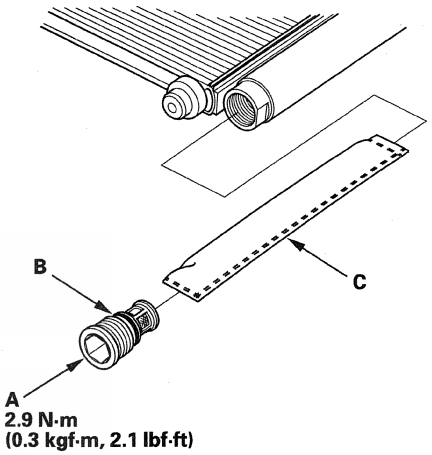

3. Install the receiver/dryer in the reverse order of removal, and note these items:

    - Replace the O-rings with new ones, and apply a thin coat of refrigerant oil (DENSO ND-OIL 8) before installing them. Be sure to use the correct O-rings for HFC-134a (R-134a) to avoid leakage.
    - Install the cap to the specified torque. It is made of resin and can be easily stripped.

Refrigerant Recovery

⚠CAUTION

- Air conditioning refrigerant or lubricant vapor can irritate your eyes, nose, or throat.
- Be careful when connecting service equipment.
- Do not breathe refrigerant or vapor.

NOTE:
- If accidental system discharge occurs, ventilate the work area before resuming service.
- Additional health and safety information may be obtained from the refrigerant and lubricant manufacturers.

1. Connect a R-134a refrigerant recovery/recycling/charging station (A) to the high-pressure service port (B) and the low-pressure service port (C), as shown, following the equipment manufacturer's instructions.

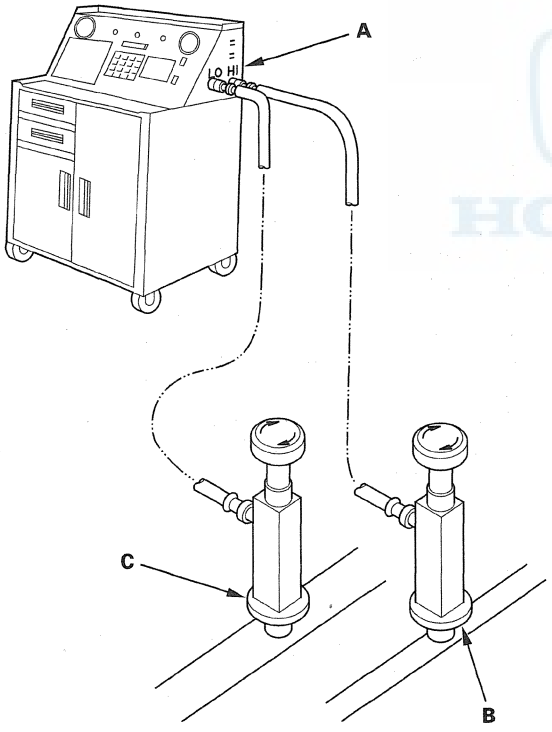

2. Measure the amount of refrigerant oil removed from the A/C system after the recovery process is completed. Be sure to put the same amount of new refrigerant oil back into the A/C system before charging.

System Evacuation

⚠CAUTION

- Air conditioning refrigerant or lubricant vapor can irritate your eyes, nose, or throat.
- Be careful when connecting service equipment.
- Do not breathe refrigerant or vapor.

NOTE:
- If accidental system discharge occurs, ventilate the work area before resuming service.
- Additional health and safety information may be obtained from the refrigerant and lubricant manufacturers.
- Do not allow moisture to contaminate the A/C system oil. Moisture in the oil is difficult to remove, and it can damage the A/C compressor.

1. When an A/C System has been opened to the atmosphere, such as during installation or repair, it must be evacuated using a R-134a refrigerant recovery/recycling/charging station. If the system has been open for several days, replace the receiver/dryer, drain the refrigerant oil, and add fresh oil (see page 21-6), then evacuate the system for several hours before charging it.

2. Connect a R-134a refrigerant recovery/recycling/charging station (A) to the high-pressure service port (B) and the low-pressure service port (C), as shown, following the equipment manufacturer's instructions. Recover the refrigerant, if any, from the A/C system (see page 21-100).

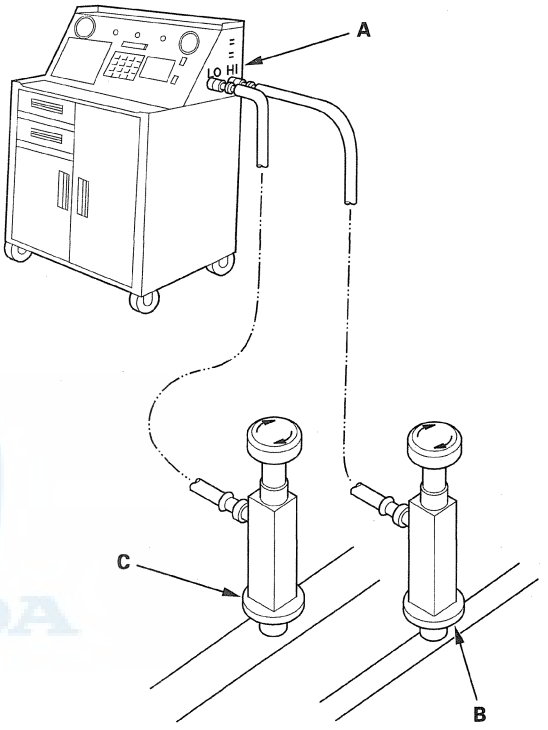

3. Evacuate the system. The vacuum pump should run for a minimum of 45 minutes to eliminate all moisture from the system. When the suction gauge reads —93.3 kPa (—700 mmHg, —27.6 in.Hg) for at least 45 minutes, close all valves, and turn off the vacuum pump.

4. If the suction gauge does not reach approximately —93.3 kPa (—700 mmHg, —27.6 in.Hg) in 15 minutes, there is probably a leak in the system. Partially charge the system, and check for leaks (see page 21-103).

System Charging

⚠CAUTION

- Air conditioning refrigerant or lubricant vapor can irritate your eyes, nose, or throat.
- Be careful when connecting service equipment.
- Do not breathe refrigerant or vapor.

NOTE:
- If accidental system discharge occurs, ventilate the work area before resuming service.
- Additional health and safety information may be obtained from the refrigerant and lubricant manufacturers.

1. Connect a R-134a refrigerant recovery/recycling/charging station (A) to the high-pressure service port (B) and the low-pressure service port (C), as shown, following the equipment manufacturer's instructions.

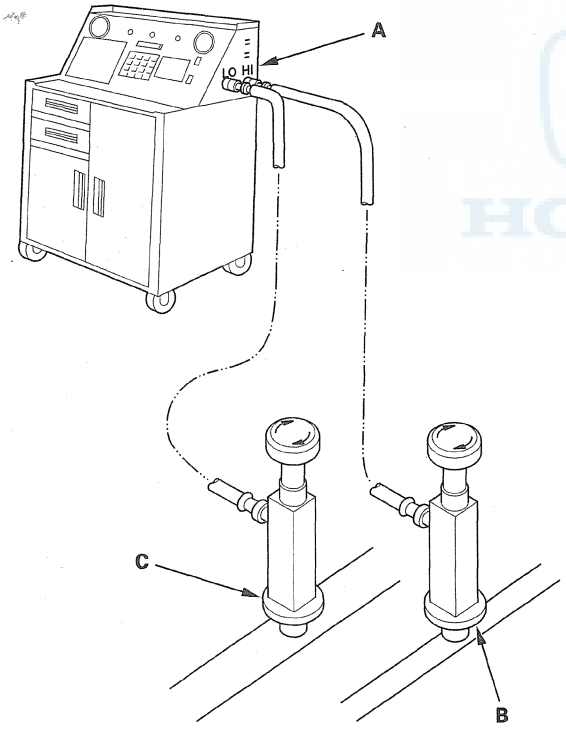

2. Recover the refrigerant in the A/C system (see page 21-100).

3. Evacuate the system (see page 21-101). If the system cannot reach a vacuum of —93.3 kPa (—700 mmHg, —27.6 in.Hg) in 15 minutes, or cannot hold a vacuum for at least 15 minutes, there is probably a leak. Do the refrigerant leak check (see page 21-103), and repair any leaks before charging the system.

4. Add the same amount of new refrigerant oil to the system that was removed during recovery. Use only DENSO ND-OIL 8 refrigerant oil.

5. Charge the system with the specified amount of R-134a refrigerant. Do not overcharge the system; the A/C compressor will be damaged.

   Select the appropriate units of measure for your refrigerant charging station.

   Refrigerant Capacity:
   450 to 500 g
   0.45 to 0.50 kg
   1.0 to 1.1 lbs
   15.8 to 17.6 oz

6. Check for refrigerant leaks (see page 21-103).

7. Check for system performance (see page 21-109).

Refrigerant Leak Check

Special Tools Required
- Leak detector YGK-H-10PM
- Leak detector HLD-100
- Leak detector TIFZX-1, or commercially available
- OPTIMAX Jr. A/C Leak Detection Kit (TRP124893)

These tools are available through the Honda Tool and Equipment Program; call 888-424-6857

⚠CAUTION
- Air conditioning refrigerant or lubricant vapor can irritate your eyes, nose, or throat.
- Be careful when connecting service equipment.
- Do not breathe refrigerant or vapor.

NOTE:
- If accidental system discharge occurs, ventilate the work area before resuming service.
- Additional health and safety information may be obtained from the refrigerant and lubricant manufacturers.
- Check the system for leaks using an R-134a refrigerant leak detector with an accuracy of 14 g (0.5 oz) per year or better.

Leak Detector Usage Tips (Refer to the Operator's Manual for complete operating instructions)

- Position the vehicle in a wind-free work area. This will aid in detecting small leaks.
- When using the leak detector for the first time, allow it to warm up for 2 minutes with the probe in a clean atmosphere. This lets the temperature sensor in the detector stabilize.
- The calibration check should be done in the "Search 2" mode. Once that is done, the other check modes do not need calibrating.
- When leak checking through the HVAC module drain hose, avoid drawing water into the probe. Water can damage the internal pump and sensor.
- Avoid creasing the flexible probe extension. Creases can restrict air flow and give false readings.
- Because the detector recalibrates itself for ambient gases, it may be necessary to move the detector away from the leak to clear the sensor. Once the sensor has cleared, recheck the suspected leak.
- When removing the clear probe tip, be careful not to lose the flow ball.
- R-134a is heavier than air; always check below and to the sides of all potential leak sources.
- Halogen leak detectors are sensitive to chemicals: windshield washing solutions, solvents/cleaners, and some vehicle adhesives. Keep these chemicals out of the area when doing leak detection.

(cont'd)

Refrigerant Leak Check (cont'd)

Fluorescent Dye Usage Tips

- Use only Tracer-Stick single dose fluorescent dye capsules from Tracerline®. Other dyes contain solvents that may contaminate the refrigerant oil, leading to component failure.
- Adding excessive amounts of dye can damage the compressor.
- PAG oil is water soluble, so condensation on the evaporator core or the refrigerant lines may wash the PAG oil and fluorescent dye away from the actual leak. Condensation may also carry dye through the evaporator module drain.
- After checking and repairing leaks, thoroughly clean any residual dye from the areas where leaks were found. Use GLO-AWAY dye cleaner, from Tracerline®, and hot water to remove the dye (follow the instructions on the bottle). Residual dye stains can cause misdiagnosis of any future A/C system leaks.
- If any refrigerant dye contacts an exterior paint surface, remove it by doing this:
  - Carefully wash the affected surfaces to remove any dirt, and to prevent paint scratching.
  - Mix water and isopropyl alcohol in a 50/50 mixture.
  - Soak a soft cotton towel with the water/alcohol mixture, and place the cloth on the affected areas to remove the dye.
  - After removing the dye with the water/alcohol-soaked cloth, carefully wash the affected areas, and check that there is no remaining dye.

1. Connect an R-134a refrigerant recovery/recycling/charging station (A) to the high-pressure service port (B) and the low-pressure service port (C), as shown, following the equipment manufacturer's instructions.

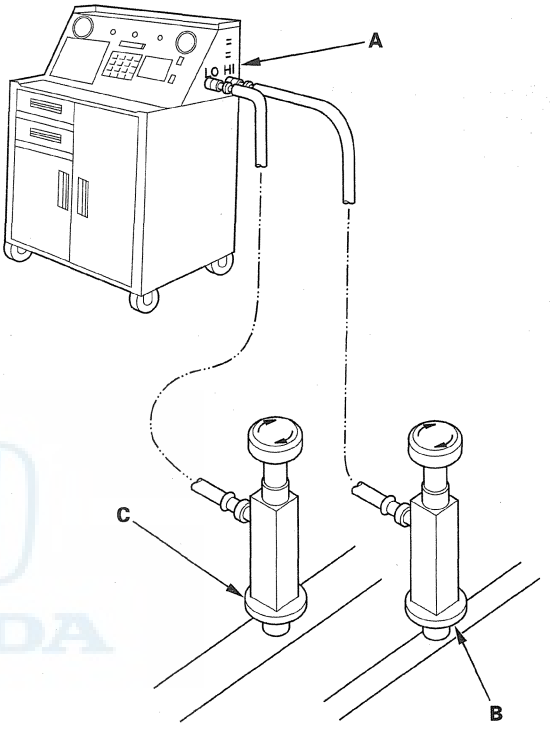

2. Recover refrigerant from the A/C system (see page 21-100), and evacuate the system (see page 21-101). If the system achieves a vacuum of approximately −93.3 kPa (−700 mmHg, −27.6 in.Hg) in 15 minutes, and holds the vacuum for 15 minutes, then the system does not have a leak at this time. If the system cannot achieve or hold a vacuum, continue the refrigerant leak check.

3. Open the high pressure valve to charge the system to the specified capacity.

   Select the appropriate units of measure for your refrigerant charging station.

   Refrigerant Capacity:
   450 to 500 g
   0.45 to 0.50 kg
   1.0 to 1.1 lbs
   15.8 to 17.6 oz

4. With the engine OFF, use a halogen leak detector first to detect the leak source. Follow a continuous path in order to ensure that you will not miss any possible leaks. Test the following areas of the system for leaks:

Possible Leak Area	Diagnostic Procedure with the Leak Detector	Notes
Service Ports	• Check the service ports with the detector. • If the detector "sniffs" a leak, use fluorescent dye to confirm it.	When capping the service ports, ensure that the seals on the port caps are in place, and that the caps are tight. The caps are used as the final seals in the system.
Condenser	If the detector "sniffs" a leak, use fluorescent dye to confirm it.	• Check for joints or connections coated with oily dust. • Check for damaged and corroded areas. • Check all fittings, couplings, brazed/welded areas and areas around attachment points. • Move the probe slowly (1 inch/second or less), and keep it within 1/4 inch of the component being checked. This maximizes the chance of detecting a leak. • If you detect a leak, blow compressed air over the area, then recheck for leaks. For large leaks, cleaning the area with compressed air may help you pinpoint the leak source.
A/C Lines	• Wiggle the rubber hoses when checking crimped metal ends. • If the detector "sniffs" a leak, use fluorescent dye to confirm it.	• Check all fittings, couplings, pressure switches, brazed/welded areas, and areas around attachment points on A/C lines and components. • Check for damaged and corroded areas. • Move the probe slowly (1 inch/second or less), and keep it within 1/4 inch of the component being checked. This maximizes the chance of detecting a leak.

5. Close the quick coupler valves, then disconnect the quick couplers from the vehicle service ports.

6. Attach the universal connect set, from the Optimax Jr. Leak Detection Kit, to the service valve fitting. Close the control valve (the black knob on the connect set).

7. Attach the charging station low pressure hose quick coupler to the service valve fitting, and open the quick coupler valve. Evacuate the connect set using the charging station vacuum pump, then close the quick coupler valve.

8. Detach the universal connect set, and install a Tracer-Stick® dye capsule between the connect set and the service valve fitting (see the manufacturer's instructions for more detail).

9. Attach the quick coupler on the universal connect set to the low pressure service port on the vehicle. Open the charging station low pressure hose quick coupler valve, but do not open the control valve.

10. Start the engine, and set the A/C system to maximum cooling. Open the control valve to let refrigerant and the dye enter the A/C system through the low pressure service port. Close the control valve when the Tracer-Stick® dye capsule is empty.

11. Run the engine and A/C system for 15 minutes to thoroughly circulate the dye. Then shut the engine off, and inspect the following areas of the system for leaks.

(cont'd)

Refrigerant Leak Check (cont'd)

NOTE:
- Check for leaks in a dark work area, and use the UV light and the special glasses from the leak check kit. Other UV lights may not work well with the Tracer-Stick® dye.
- Small leaks may take up to 1 week of vehicle operation (with normal A/C use) to become visible.

Possible Leak Area	Diagnostic Procedure with Fluorescent Dye
Service Ports	If a leak is found, replace the Schrader valve on the service port.
A/C Lines	• Use a permanent marker pen to circle the leak area. • If a leak is found, remove and replace the A/C line (see page 21-8).
Condenser	• If a leak is found, remove the condenser (see page 21-97). • Determine whether leak is in the condenser or the receiver/dryer. • Use a permanent marker pen to circle the leak area. • Replace either the receiver/dryer (see page 21-99), or the condenser (see page 21-97), depending upon which is leaking.
A/C Compressor	• Check for leaks at all of the compressor joints, the clutch center, the compressor front housing bolts, and the scroll bolts on the back of the compressor. • If the compressor relief valve appears to be leaking, determine whether the leak is coming from the relief valve, or the joint between the compressor casing and the valve. – If the leak is from the relief valve, diagnose and repair the cause of excessive A/C system pressure, then replace the compressor relief valve (see page 21-97). – If the leak is from the casing/valve joint, replace the A/C compressor relief valve (see page 21-97). • If the leak is coming from the suction hose and/or discharge hose fittings on the compressor, clean the A/C fittings and replace the suction/discharge fitting O-rings. • For all other compressor leaks, remove and replace the A/C compressor (see page 21-93).
Evaporator	• Start checking for evaporator leaks by illuminating the evaporator drain tube area. Let the vehicle sit for 30 minutes with the engine off, and the doors and windows closed. Then place the detector probe in the center vent, and turn the fan on to low speed. • If a leak is found, remove the evaporator core (see page 21-87). • Determine whether leak is from the evaporator or the expansion valve. • Use a permanent marker pen to circle the leak area. • Replace the expansion valve (see page 21-88), or the evaporator core (see page 21-87), depending upon which is leaking.

A/C System Noise Check

⚠CAUTION

- Air conditioning refrigerant or lubricant vapor can irritate your eyes, nose, or throat.
- Be careful when connecting service equipment.
- Do not breathe refrigerant or vapor.

The A/C system noise check will help you determine the source of abnormal A/C system noise.

NOTE:
- If accidental system discharge occurs, ventilate the work area before resuming service.
- Additional health and safety information may be obtained from the refrigerant and lubricant manufacturers.
- Identify the conditions when the noise occurs. The weather, the vehicle speed, the vehicle being in gear or in neutral, the engine temperature, or other conditions may be factors in determining the noise source.
- Do an A/C system inspection (see page 21-9), and correct any problems found prior to diagnosing abnormal noises.
- Abnormal A/C noises can be misleading. For example, a sound similar to a failed bearing may be caused by loose fasteners, loose mounting brackets, or a faulty compressor clutch assembly.

1. Inspect the air inlet grille in the cowl cover for debris. If debris is present, remove it.

2. Sit inside the vehicle, close the doors and windows, and turn the ignition switch to ON (II), but do not start the engine. Cycle the HVAC system through all blower speeds and all air distribution modes to determine where and when the noise occurs.

3. Operate the blower at each speed with the engine and A/C off, and check for unusual noises and excessive vibration. If noise and/or vibration are present, do the following checks:

   1 If the noise or vibration occurs only in a specific mode or setting, then check these items:
   - Operation of the mode control motor, door, and linkage
   - Operation of the air mix control motor(s), door(s), and linkage
   - Operation of the recirculation motors, doors, and linkage

   2 If there is a squeaking or chirping noise, but no unusual vibration, replace the blower motor (see page 21-86).

   3 Remove the blower unit (see page 21-85), and check for foreign material (leaves or twigs, for example) on the blower motor and fan. If foreign material is present, remove it, and recheck for noise. If you don't find any foreign material, remove the blower motor (see page 21-86), and check these items:
   - Check if the fan blades are cracked or broken
   - Make sure the fan retainer is tight
   - Inspect the fan alignment on the blower motor shaft

   Replace the blower motor if any problems are present.

4. Set up the vehicle for the running A/C checks:

   - Select a quiet area for testing
   - Apply the parking brake
   - Shift the vehicle in PARK or in Neutral
   - Start the engine
   - Set the temperature control button to Max Cool
   - Set the mode control button to Vent
   - Set the fan control button to minimum (but not OFF)
   - Turn the A/C button ON

   Switch the compressor on and off several times to clearly identify the sound during A/C compressor operation. Listen to the noise while the A/C compressor clutch is engaged and disengaged. Probe the A/C system with a stethoscope to pinpoint the noise.

   NOTE: If the noise does not change when the A/C compressor clutch engages or disengages, the noise may be caused by an engine-related component. Probe the engine area with a stethoscope to pinpoint the noise.

(cont'd)

A/C System Noise Check (cont'd)

5. Turn the ignition switch to LOCK (0), and check the drive belt for excessive wear, oil contamination, improper routing, or a faulty belt tensioner (see page 4-33). Correct any problems found. Start the engine, run the A/C system, and check if the noise is coming from the drive belt, the belt tensioner or any of the pulleys. Repair or replace any faulty components.

6. Listen for noises coming from the A/C lines, the A/C hoses, the condenser, the evaporator, the receiver-drier, or the expansion valve, and check these items:

   - Noises caused by A/C components touching other components or the body. Reroute or insulate the A/C component(s) as needed, and recheck for noise.
   - Loose, damaged or excessively worn A/C components or mounting hardware. Repair or replace the faulty component(s) or hardware, and recheck for noise.
   - A moaning noise from the A/C suction line. If there is a moaning noise, check the system refrigerant charge (see page 21-102). If the refrigerant charge is OK, replace the receiver/dryer.
   - A whistling or hissing noise from the expansion valve. Evacuate the system for 3 hours (see page 21-101), then recheck. If the noise is still present, replace the expansion valve (see page 21-88).

7. Check the operation of the A/C compressor clutch:

   - Make sure compressor clutch engages without slipping. If the clutch does not engage, troubleshoot the A/C compressor clutch circuit (see page 21-67). If the compressor clutch slips, replace the complete clutch assembly (see page 21-95).
   - Make sure the compressor clutch disengages. If the clutch does not disengage, do the A/C compressor clutch circuit troubleshooting (see page 21-67). If the clutch circuit is OK, do the A/C compressor clutch check (see page 21-94), and see if the clutch is mechanically jammed. If there are no electrical or mechanical problems with the compressor clutch, replace the A/C compressor (see page 21-93).
   - Make sure the compressor clutch cycles normally. If the compressor clutch is cycling rapidly, the A/C system is probably low on refrigerant due to a leak. Do the refrigerant leak check (see page 21-103). If the refrigerant charge is OK, and there are no leaks, troubleshoot the A/C compressor clutch circuit.

8. Listen with a stethoscope for noises coming from the A/C compressor, and check these items:

   - The noise changes when the compressor clutch disengages. If the noise does not change when the A/C compressor disengages, the noise may be caused by an engine-related component. Probe the engine area with a stethoscope to pinpoint the noise.
   - The A/C system operating pressures are normal. If the system pressures are abnormal, troubleshoot the problem using the pressure test table in the A/C system test (see page 21-109). Correct the pressure-related problem(s), and recheck for noise.
   - The compressor hose connections, mounting brackets, and fasteners are in good condition. If any of these components are loose, damaged, or excessively worn, repair or replace the faulty component(s), and recheck for noise. If these components are in good condition, and the noise is still present, replace the A/C compressor (see page 21-93).

A/C System Test

Performance Test

⚠CAUTION

- Air conditioning refrigerant or lubricant vapor can irritate your eyes, nose, or throat.
- Be careful when connecting service equipment.
- Do not breathe refrigerant or vapor.

The performance test will help determine if the A/C system is operating within specifications.

NOTE:
- If accidental system discharge occurs, ventilate the work area before resuming service.
- Additional health and safety information may be obtained from the refrigerant and lubricant manufacturers.

1. Do the A/C system inspection (see page 21-9), and correct any problems found.

2. Connect an R-134a refrigerant recovery/recycling/charging station to the high-pressure service port and the low-pressure service port, following the equipment manufacturer's instructions.

3. Determine the relative humidity and air temperature.

4. Remove the glove box (see page 20-103).

5. Insert a thermometer (A) in the center vent.

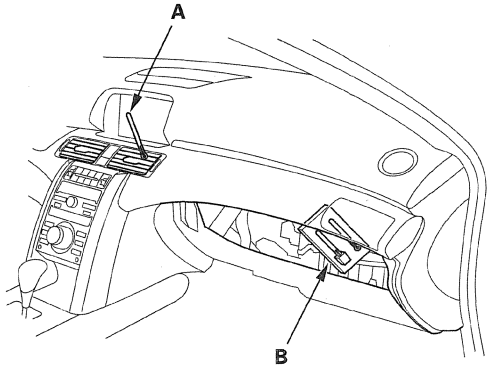

6. Place a thermometer (B) near the blower unit's recirculation inlet duct.

7. Test conditions:

   - Move the vehicle out of direct sunlight and let it cool down to the surrounding (ambient) temperature. If necessary, wash the vehicle to cool it down more quickly.
   - The ambient temperature must be at least 60 °F (16 °C).
   - Open the hood.
   - Open the front doors.
   - Set the temperature control button to Max Cool, the mode control button to Vent, and the recirculation control button to Recirculate.
   - Turn the A/C button ON and the fan control button to Max.
   - Hold the engine speed at 1,500 rpm.
   - No driver or passengers in the vehicle.

8. Inspect the A/C components for the following conditions:

   - A/C compressor clutch not engaged.
   - Abnormal frost areas.
   - Unusual noises.

   If you observe any of these conditions, refer to the Symptom Troubleshooting Index.

9. After running the air conditioning for 10 minutes under the above test conditions, read the delivery temperature from the thermometer in the center vent, the intake temperature near the blower unit, and the discharge (high) and suction (low) pressures on the A/C gauges.

(cont'd)

A/C System Test (cont'd)

10. To complete the vent (delivery)/ambient air (intake) temperature chart:

    - Mark the vent (delivery) temperature on the vertical line.
    - Mark the ambient air (intake) temperature on the bottom line.
    - Draw a vertical line from the ambient air (intake) temperature mark.
    - Draw a horizontal line from the vent (delivery) temperature mark until it intersects the vertical line.

    NOTE: The vent temperature and the ambient air temperature lines should intersect in the shaded area. Any measurements outside the area may indicate the need for further inspection.

Ambient Air (Intake) Temperature vs. Vent (Delivery) Temperature

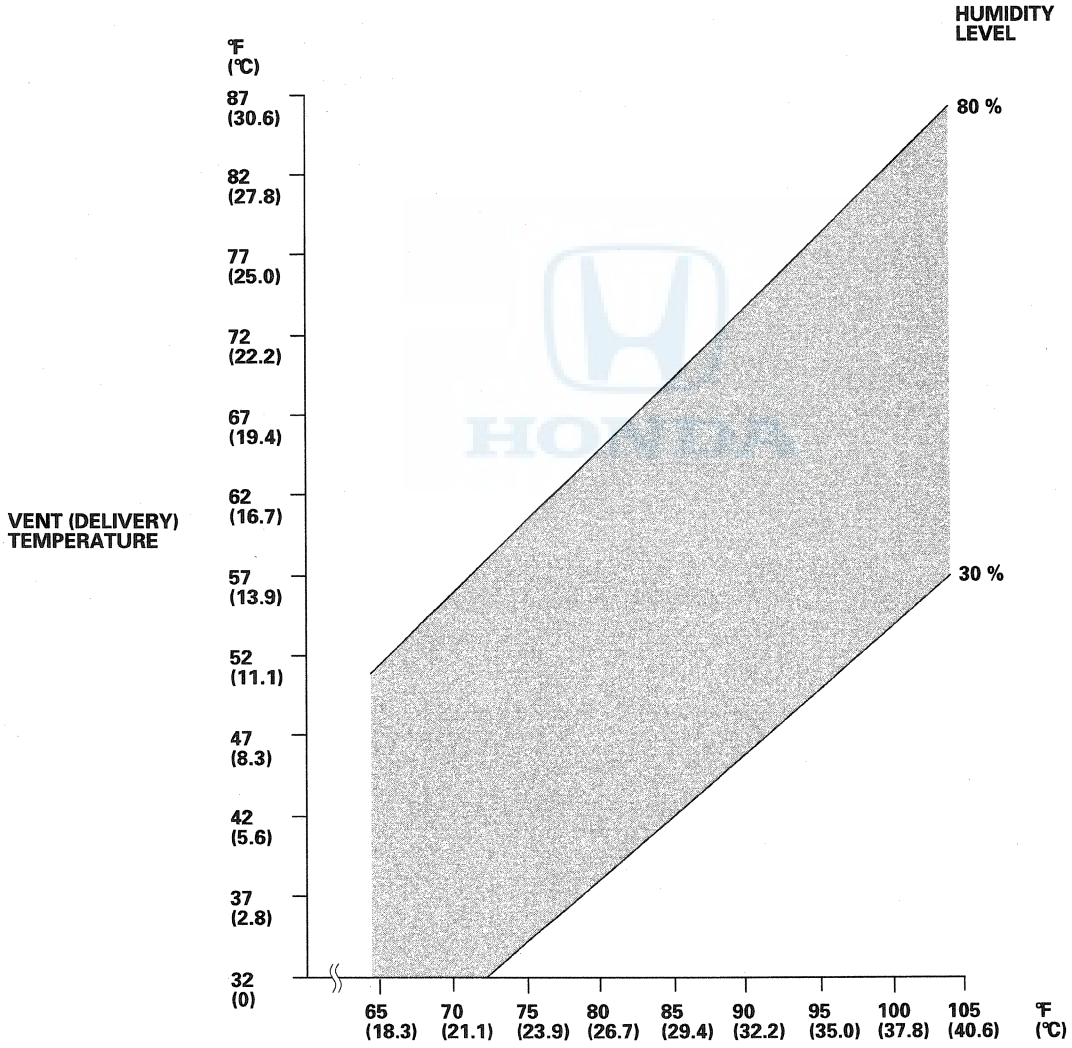

11. To complete the high side (discharge) pressure/ambient air (intake) temperature chart:

    - Mark the high side (discharge) pressure on the vertical line.
    - Mark the ambient air (intake) temperature on the bottom line.
    - Draw a vertical line from the ambient air (intake) temperature mark.
    - Draw a horizontal line from the high side (discharge) pressure mark until it intersects the vertical line.

    NOTE: The high side pressure and the ambient air temperature lines should intersect in the shaded area. Any measurements outside the area may indicate the need for further inspection.

Ambient Air (Intake) Temperature vs. High Side (Discharge) Pressure

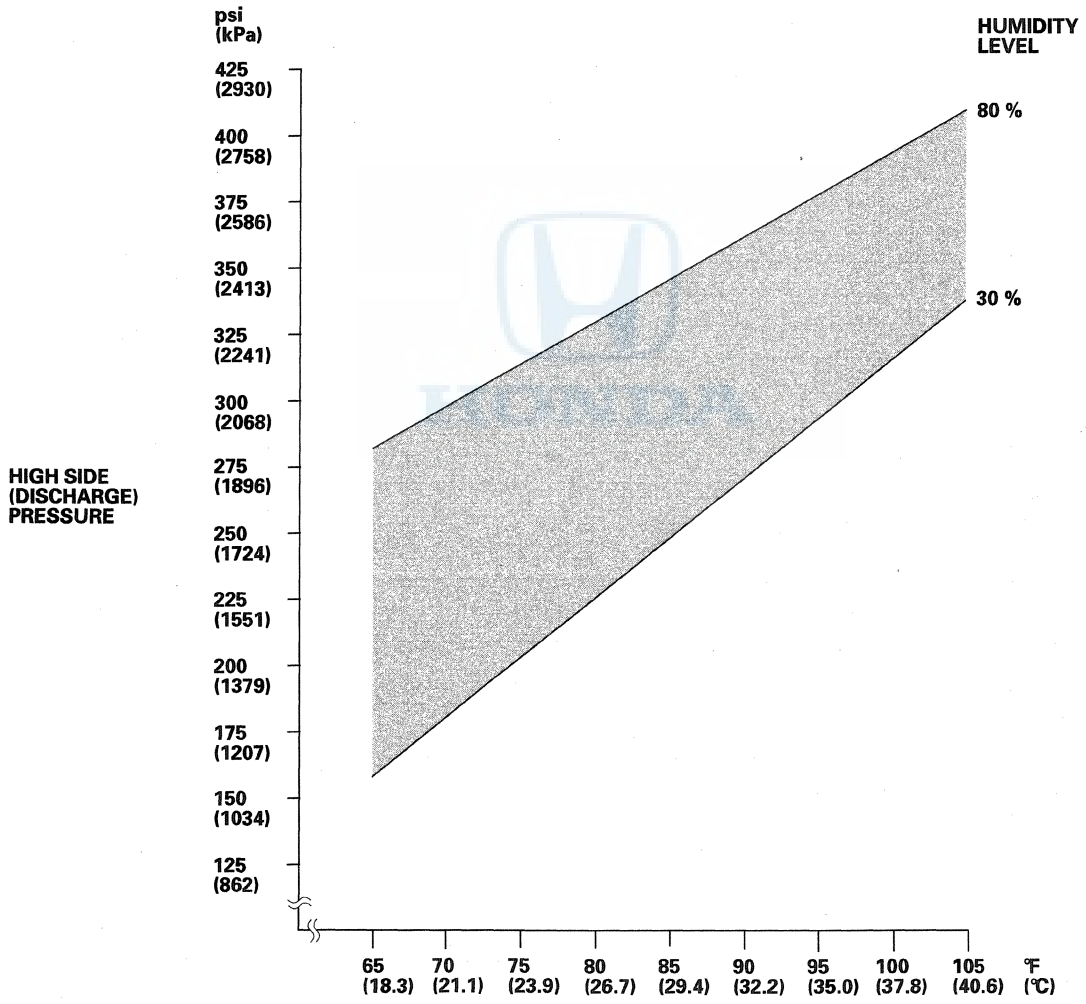

(cont'd)

A/C System Test (cont'd)

12. To complete the low side (suction) pressure/ambient air (intake) temperature chart:

    - Mark the low side (suction) pressure along the vertical line.
    - Mark the ambient air (intake) temperature along the bottom line.
    - Draw a vertical line from the ambient air (intake) temperature mark.
    - Draw a horizontal line from the low side (suction) pressure mark until it intersects the vertical line.

    NOTE: The low side pressure and the ambient air temperature lines should intersect in the shaded area. Any measurements outside the area may indicate the need for further inspection.

Ambient Air (Intake) Temperature vs. Low Side (Suction) Pressure

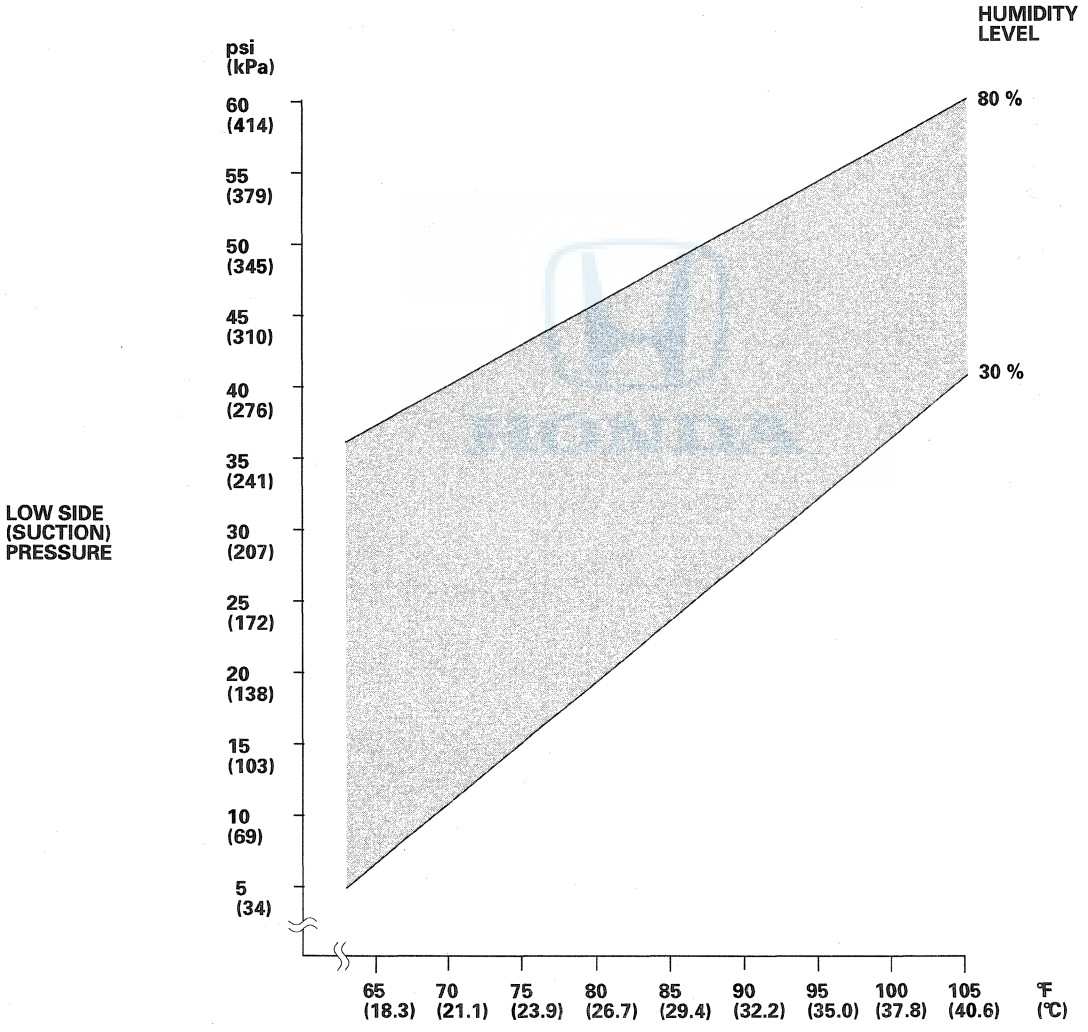

Test results	Related symptoms	Probable cause	Remedy
Suction and discharge pressures are normal	Warm air from the vents.	• The A/C system contains too much refrigerant oil. • The air mix door is not operating properly.	• Evacuate the system (see page 21-101). Adjust the oil level (see page 21-6), then recharge the system (see page 21-102). • Check air mix door operation; driver's (see page 21-77), passenger's (see page 21-78), and repair as needed.
Suction and discharge pressures are roughly equal and steady	The suction and discharge pressures equalize when the engine is revved.	The A/C compressor clutch or the drive belt is slipping, or the compressor shaft seal is leaking.	• If the drive belt is slipping, replace the drive belt (see page 4-33). Also inspect the drive belt auto-tensioner (see page 4-35). • If the A/C compressor clutch is slipping, replace it (see page 21-95). • Check the A/C compressor shaft seal. If it's leaking, replace the A/C compressor (see page 21-93).
Suction and discharge pressures are roughly equal but fluctuate	Suction and discharge pressures fluctuate during operation, and equalize when the compressor clutch disengages.	The compressor discharge valve or the compressor gasket is faulty.	Replace the A/C compressor (see page 21-93).
Suction and discharge pressures are roughly equal and abnormally low	The suction and discharge pressures do not change during continued operation.	The A/C system is undercharged.	Do the refrigerant leak check (see page 21-103). Repair any leaks, then recharge the system (see page 21-102).
Suction and discharge pressures are abnormally high, but normalize when the condenser is cooled	The suction pressure decreases when cool water is sprayed on the A/C condenser.	The A/C system is overcharged.	Evacuate the A/C system (see page 21-101), and recharge it to specifications (see page 21-102).
Suction and discharge pressures are abnormally high, and refrigerant line temperatures are abnormal	• The vapor line to the condenser is too hot. • The liquid line from the expansion valve is not cold. • There is an abrupt temperature change in the system.	The A/C system refrigerant flow is restricted.	Replace the restricted line or component.
The suction pressure is low, the discharge pressure is high, and the refrigerant temperature changes abnormally somewhere in the system	• The high pressure liquid line going into the expansion valve is cold. • There is an abrupt temperature drop in an A/C line or hose.	The A/C system refrigerant flow is restricted.	Replace the restricted line or component.
Discharge pressure is so high that the compressor relief valve has opened. Suction pressure is normal or below normal	The temperature drop between the condenser inlet and outlet is less than 30 °F (16 °C) or more than 60 °F (32 °C).	The A/C condenser or receiver/dryer is restricted.	Replace the restricted component; the condenser (see page 21-97) or the receiver/dryer (see page 21-99).
Discharge pressure is so high that the compressor relief valve has opened. Suction pressure is also above normal	• No evidence of restricted refrigerant flow. • The A/C compressor clutch stays engaged with the A/C switch off.	The A/C compressor clutch circuit is always on (energized), or the compressor clutch is mechanically jammed.	• Do the A/C compressor clutch circuit troubleshooting (see page 21-67), and repair the problem with the circuit. • If the A/C compressor clutch circuit is OK, do the A/C compressor clutch check (see page 21-94), and repair as needed.
Suction and discharge pressures are abnormally high, but drop rapidly when the compressor disengages	• Discharge pressure quickly drops about 196 kPa (28 psi) when the clutch disengages. • Expansion valve inlet and outlet temperatures are different.	There is excess air in the A/C system.	Evacuate the A/C system (see page 21-101), and recharge it (see page 21-102).

(cont'd)

A/C System Test (cont'd)

Test results	Related symptoms	Probable cause	Remedy
Suction and discharge pressures are abnormally high, and there is little or no airflow through the A/C condenser	Suction and discharge pressures normalize when water is sprayed on the A/C condenser.	• The condenser and/or radiator fins are clogged. • The condenser fins are damaged. • The condenser and/or radiator fans are not working properly.	• Clean debris from the condenser and/or radiator fins. • Comb the condenser fins to repair any damage. • Troubleshoot the A/C condenser fan and/or the radiator fan circuit(s).
The suction pressure is high and the discharge pressure is low. Both pressures are steady	• The liquid line temperature is similar on both sides of expansion valve. • System pressures do not vary at a steady engine speed.	The expansion valve is stuck open.	Replace the expansion valve (see page 21-88).
The suction pressure is high, the discharge pressure is low, and there are particle contaminants in the refrigerant lines	Metal flakes or Desiccant particles are in the discharge hose or expansion valve.	The A/C compressor is malfunctioning.	Replace the A/C compressor (see page 21-93). If the system is contaminated with desiccant, replace the receiver/dryer (see page 21-99).
The suction pressure is high, the discharge pressure is low, and the pressures quickly change when the A/C disengages	The discharge and suction pressures equalize soon after the A/C compressor stops.	The A/C compressor seal is faulty.	Replace the A/C compressor (see page 21-93).
Suction and discharge pressures are both low and none of the refrigerant lines are cold	There is no frost on the expansion valve, and the low-pressure liquid line is not cold.	The A/C system has a leak (very low refrigerant charge).	Do the refrigerant leak check (see page 21-103), repair any leaks, and recharge the A/C system (see page 21-102).
Suction and discharge pressures are both low, and the expansion valve or the suction line is abnormally cold	• Expansion valve inlet temperature is much lower than receiver/dryer outlet temperature. • The low pressure (suction) hose/line is cooler than the evaporator.	• The discharge hose/line is clogged or kinked, which is restricting refrigerant flow. • The suction hose/line is clogged or kinked, which is restricting refrigerant flow.	Repair or replace the faulty A/C line or hose (see page 21-8).
Initially, the suction and discharge pressure are normal, but both become abnormally low during operation	During extended operation, the air flow from the vents decreases.	The evaporator is freezing up.	Run the fan with A/C compressor off to warm the evaporator, then test the evaporator temperature sensor (see page 21-75). If necessary, replace the evaporator temperature sensor.
Suction and discharge pressures are both low and there are abnormal temperature changes at the expansion valve	• During operation, the suction pressure decreases, and heavy frost occurs on the low pressure liquid line. • The low pressure liquid line is cold at the expansion valve, but warm after the valve. • There is frost on the expansion valve.	The expansion valve is stuck closed.	• Replace the expansion valve (see page 21-88), and the receiver/dryer (see page 21-99). • Check the old expansion valve for contamination. If contaminants are found, replace the component that caused the contamination.
The discharge pressure is low, the suction pressure is extremely low, and the expansion valve outlet is abnormally warm	There is no frost on the expansion valve outlet, and the liquid line temperature changes significantly across the expansion valve.	There is excessive moisture in the A/C system.	Evacuate the A/C system (see page 21-101), and replace the receiver/dryer (see page 21-99). Recharge the A/C system (see page 21-102).
The discharge pressure is low, the suction pressure is extremely low, and the suction line is abnormally cold	There is frost on the line from the evaporator to the compressor.	The evaporator is internally contaminated or plugged.	Replace the evaporator core (see page 21-87).

Test results	Related symptoms	Probable cause	Remedy
The discharge pressure is low, the suction pressure is extremely low, and the refrigerant temperature doesn't change going through the expansion valve	• The low pressure liquid line is not cold. • The liquid line temperatures are similar on both sides of expansion valve.	The expansion valve is faulty.	Replace the expansion valve (see page 21-88).
The discharge pressure is low, the suction pressure is extremely low, and the expansion valve is abnormally cold	There is frost on the expansion valve.	Excessive moisture in the system is freezing the expansion valve.	Replace the receiver/dryer (see page 21-99). Evacuate the A/C system (see page 21-101), and recharge the A/C system (see page 21-102).
The discharge pressure is low, the suction pressure is extremely low, and the high pressure liquid line is abnormally cold	There is frost on the line from the receiver/dryer to the expansion valve.	The receiver/dryer is clogged.	Replace the receiver/dryer (see page 21-99). Evacuate the A/C system (see page 21-101), and recharge the A/C system (see page 21-102).

HONDA

SUPPLEMENTAL RESTRAINT SYSTEM (SRS) (If electrical maintenance is required)

The Acura RL SRS includes a driver's airbag in the steering wheel hub, a passenger's airbag in the dashboard above the glove box, seat belt tensioners in the front seat belt retractors, side curtain airbags in the sides of the roof, and side airbags in the front seat-backs. Information necessary to safely service the SRS is included in this Service Manual. Items marked with an asterisk (*) on the contents page include or are located near SRS components. Servicing, disassembling, or replacing these items require special precautions and tools, and should be done by an authorized Acura dealer.

- To avoid rendering the SRS inoperative, which could lead to personal injury or death in the event of a severe frontal or side collision, all SRS service work should be done by an authorized Acura dealer.
- Improper service procedures, including incorrect removal and installation of the SRS, could lead to personal injury caused by unintentional deployment of the airbags, side airbags, and/or side curtain airbags.
- Do not bump or impact the SRS unit, front impact sensors, side impact sensors, or rear safing sensor, especially when the ignition switch is in ON (II), or for at least 3 minutes after the ignition switch is turned to LOCK (0); otherwise, the system may fail in a collision, or the airbags may deploy.
- SRS electrical connectors are identified by yellow color coding. Related components are located in the steering column, center console, dashboard, driver's dashboard lower cover, in the dashboard above the glove box, in the front seats, in the roof side, and around the floor. Do not use electrical test equipment on these circuits.

HONDA

Body Electrical

Body Electrical
Special Tools 22-2
General Troubleshooting Information 22-3
Remote Registration and Reprogramming for Keyless Access System and Immobilizer System 22-7

Relay and Control Unit Locations 22-9

Connectors and Harnesses 22-17

Fuse/Relay Boxes 22-73

Power Distribution 22-78

Ground Distribution 22-83

Under-hood Fuse/Relay Box
Removal and Installation 22-84
DTC Troubleshooting 22-85

Under-dash Fuse/Relay Box
Driver's Under-dash Fuse/Relay Box (MICU) Removal/Installation 22-88
Passenger's Under-dash Fuse/Relay Box Removal/Installation 22-89

Battery
Battery Test 22-90
Battery Terminal Disconnection and Reconnection 22-91
Battery Removal and Installation 22-92

Relays 22-93

Ignition Switch
Component Location Index 22-96
Circuit Diagram 22-97
Key Interlock System Circuit Troubleshooting 22-98
Park Pin Switch Test 22-99
Ignition Switch Test 22-100
Ignition Switch Replacement 22-100

Multiplex Integrated Control System
Component Location Index 22-101
General Troubleshooting Information 22-103
DTC Troubleshooting Index 22-106
System Description 22-115
Troubleshooting - B-CAN System Diagnosis Test Mode A 22-131
Troubleshooting - B-CAN System Diagnosis Test Mode B 22-132
Troubleshooting - B-CAN System Diagnosis Test Mode C 22-133
Troubleshooting - B-CAN System Diagnosis Test Mode D 22-134
Troubleshooting - B-CAN System Diagnosis Test Mode 1 and Test Mode 2 22-135
Circuit Diagram 22-138
DTC Troubleshooting 22-142
MICU Input Test 22-152
Gauge Control Module Input Test 22-155
Combination Switch Control Unit Input Test 22-157
Relay Control Module Input Test 22-158
Driver's MPCS Unit Input Test 22-159

Keyless/Power Door Locks/Security System
Component Location Index 22-161
System Description 22-163
Circuit Diagram 22-166
DTC Troubleshooting 22-171
Control Unit Input Test 22-175
Door Lock Actuator Test 22-184
Door Lock Knob Switch Test 22-185
Door Lock Switch Test 22-186
Door Key Cylinder Switch Test 22-186
Security Hood Switch Test 22-187
Remote Test 22-187
Remote Registration and Reprogramming 22-7

Horns
Component Location Index 22-189
Circuit Diagram 22-190
Horn Test/Replacement 22-190
Horn Switch Test 22-191

Exterior Lights
Component Location Index 22-192
Circuit Diagram 22-195
DTC Troubleshooting 22-204
Combination Light Switch Test/Replacement 22-214
Daytime Running Lights Control Unit Input Test/Replacement 22-216
HID Lamp System Troubleshooting 22-217
Headlight Adjustment 22-219
Headlight Replacement 22-220
Bulb Replacement 22-221
HID Unit Replacement 22-223
Fog Light Replacement 22-224
Taillight Replacement 22-225
License Plate Light Replacement 22-225
Back-up Light Replacement 22-226
High Mount Brake Light Replacement 22-227
Brake Pedal Position Switch Test 22-227

Turn Signal/Hazard Warning Lights
Component Location Index 22-228
Circuit Diagram 22-230
DTC Troubleshooting 22-232
Turn Signal/Hazard Relay 1 Input Test 22-233
Hazard Warning Switch Test/Replacement 22-235
Side Turn Signal Light Replacement 22-235

Dash Lights Brightness Controller
Circuit Diagram 22-236
Dash Lights Brightness Controller Test/Replacement 22-237

Adaptive Front Lighting System
Component Location Index 22-238
System Description 22-239
Circuit Diagram 22-240
DTC Troubleshooting 22-242
Adaptive Front Lighting Control Unit Learning Procedure Index 22-264
Adaptive Front Lighting Control Unit Learning Procedure 22-265
Control Unit Input Test 22-268
Headlight Leveling Motor Test 22-271
AFS OFF Switch Test/Replacement 22-272
Adaptive Front Lighting Gearbox Test 22-272
Suspension Stroke Sensor Test 22-273

Suspension Stroke Sensor Replacement 22-273
Adaptive Front Lighting Gearbox Replacement 22-274
Headlight Leveling Motor Replacement ... 22-276

Headlight Leveling System

Component Location Index 22-277
System Description 22-278
Headlight Initial Position Learning Procedure 22-279
Circuit Diagram 22-280
Headlight Leveling Control Unit Input Test 22-281
Headlight Leveling Motor Input Test 22-283
Headlight Leveling Motor Test 22-284
Suspension Stroke Sensor Test 22-285
Suspension Stroke Sensor Replacement 22-285
Headlight Leveling Motor Replacement ... 22-286

Interior Lights

Component Location Index 22-287
Circuit Diagram 22-290
Roof Console Input Test 22-297
MICU Input Test 22-299
Driver's MPCS Unit Input Test 22-301
Front Passenger's MPCS Unit Input Test 22-303
Left Rear Power Window Switch Input Test 22-305
Right Rear Power Window Switch Input Test 22-306
Roof Console Replacement 22-307
Ambient Light Test 22-308
Front Individual Map Light Replacement 22-308
Rear Individual Map Light Test/Replacement 22-309
Glove Box Light Replacement 22-310
Console Box Light Replacement 22-310
Courtesy Light Replacement 22-311
Vanity Mirror Light Test 22-311
Footwell Light Replacement 22-312
Trunk Light Test/Replacement 22-313
Trunk Lid Latch Switch Test 22-313
Door Switch Test 22-314

Entry Lights Control System

Component Location Index 22-315
Circuit Diagram 22-317
Control Unit Input Test 22-319
Ignition Key Switch Test 22-325
Ignition Key Light Test 22-325

HomeLink Remote Control System

Circuit Diagram 22-326
Test 22-326
HomeLink Unit Replacement 22-327

Power Windows

Component Location Index 22-328
System Description 22-330
Resetting the Power Window Control Unit 22-331
Circuit Diagram 22-332
DTC Troubleshooting 22-336
Driver's MPCS Unit Input Test 22-361
Front Passenger's MPCS Unit Input Test 22-364
Left Rear Power Window Switch Input Test 22-367
Right Rear Power Window Switch Input Test 22-369
Power Window Motor Test 22-371
Power Window Master Switch Replacement 22-372
Passenger's Power Window Switch Test/Replacement 22-372

Wipers/Washers

Component Location Index 22-373
Circuit Diagram 22-375
DTC Troubleshooting 22-377
Wiper/Washer Switch Replacement 22-381
Wiper/Washer Switch (Combination Switch Control Unit) Input Test 22-382
Headlight Washer Switch Test/Replacement 22-384
Wiper Motor Test 22-385
Washer Motor Test 22-385
Wiper Motor Replacement 22-386
Washer Reservoir Replacement 22-387
Washer Fluid Level Switch Test 22-387
Headlight Washer Motor Test/ Replacement 22-388
Headlight Washer Nozzle Replacement ... 22-388
Wiper Blade Replacement 22-389
Wiper Arm/Nozzle Adjustment 22-390
Washer Tube Replacement 22-392

Gauges

Component Location Index 22-394
Self-diagnostic Function 22-396
Circuit Diagram 22-399
DTC Troubleshooting 22-406
Rewriting the ODO Data and Transferring the Maintenance Minder Data to a New Gauge Control Module 22-418
Gauge Control Module Replacement 22-419
Select/Reset/Information Switch Test/Replacement 22-419
Outside Air Temperature Indicator Calibration 22-420

Reminder Systems

Component Location Index 22-421
Circuit Diagram 22-422
Control Unit Input Test 22-423

Rear Window Defogger

Component Location Index 22-426
Circuit Diagram 22-427
Function Test 22-428
Defogger Wire Repair 22-429

Moonroof

Component Location Index 22-430
Symptom Troubleshooting Index 22-431
Resetting the Moonroof Control Unit 22-432
Circuit Diagram 22-433
Moonroof Control Unit Input Test 22-435
Moonroof Switch Test/Replacement 22-437

Accessory Power Sockets

Component Location Index 22-438
Circuit Diagram 22-439
Front Accessory Power Socket Test/Replacement 22-440
Rear Accessory Power Socket Test/Replacement 22-441

Automatic Dimming Inside Mirror
Circuit Diagram 22-442
System Description 22-443
Test/Replacement 22-443

Seat Belt Tension Reducer
Circuit Diagram 22-444
Test 22-445

Trunk Lid Opener
Component Location Index 22-446
Circuit Diagram 22-447
Trunk Lid Opener Main Switch Test/Replacement 22-448
Trunk Lid Opener Switch Test/Replacement 22-448
Trunk Lid Opener Solenoid Test 22-449
Trunk Lid Outer Handle Switch Test/Replacement 22-449

Fuel Fill Door Opener
Component Location Index 22-450
Circuit Diagram 22-451
Fuel Fill Door Opener Solenoid Test 22-452
Fuel Fill Door Opener Switch Test/Replacement 22-452

Power Mirrors
Component Location Index 22-453
Power Mirror Switch Test/Replacement 22-454
Power Mirror Actuator Test 22-454
Power Mirror Actuator Replacement 22-455

Seat Heaters
Component Location Index 22-458
Circuit Diagram 22-460
Seat Heater Test 22-462
Switch Test/Replacement 22-465

Power Lumbar Support
Component Location Index 22-466
Circuit Diagram 22-467
Switch Test/Replacement 22-468
Motor Test 22-468

Power Seats
Component Location Index 22-469
Circuit Diagram 22-470
Front Passenger's Power Seat Adjustment Switch Test/Replacement 22-471
Front Passenger's Power Seat Motor Test 22-472

Power Rear Window Sunshade
Component Location Index 22-473
Circuit Diagram 22-474
Control Unit Input Test 22-475
Switch Test 22-476

Ventilated Seats
Component Location Index 22-477
Self-diagnostic Function 22-479
Circuit Diagram 22-480
Control Unit Input Test 22-484
Seat Heater Test 22-487
Fan Motor Test 22-488
Switch Test/Replacement 22-489

Power Rear Headrest
Component Location Index 22-490
Circuit Diagram 22-491
DTC Troubleshooting 22-492
Control Unit Input Test 22-494
Headrest Switch Test 22-496
Headrest Actuator Test 22-496

Immobilizer System
Component Location Index 22-497
System Description 22-498
Circuit Diagram 22-499
Symptom Troubleshooting Information 22-500
System Check 22-502
Status Log 22-503
Symptom Troubleshooting 22-505
Imoes Unit Input Test 22-506
Imoes Unit Replacement 22-508
Immobilizer Control Unit-Receiver Replacement 22-509

Driving Position Memory System (DPMS)
Component Location Index 22-510
Circuit Diagram 22-512
DTC Troubleshooting 22-519
System Input Test and Function Test 22-556
Power Seat Control Unit Input Test 22-562
Power Mirror Circuit Input Test 22-564
Power Tilt/Telescopic Steering Control Unit Input Test 22-568
Driving Position Memory Switch Test/Replacement 22-570
Power Seat Adjustment Switch Test/Replacement 22-571
Driver's Power Seat Motor Test 22-572
Power Tilt/Telescopic Steering Switch Test/Replacement 22-574
Power Tilt/Telescopic Steering Motor Test 22-574

Keyless Access System
Component Location Index 22-575
System Description 22-577
Circuit Diagram 22-578
General Troubleshooting Information 22-581
DTC Troubleshooting 22-582
Symptom Troubleshooting Information 22-608
Symptom Troubleshooting 22-613
Keyless Access Indicator Circuit Troubleshooting 22-614
Keyless Buzzer Circuit Troubleshooting 22-616
Touch Sensor Circuit Troubleshooting 22-618
Door and Trunk LF Antenna Test 22-621
Interior LF Antenna Test 22-622
Control Unit Input Test 22-623
RF Unit 1 Replacement 22-625
RF Unit 2 Replacement 22-625
Front Interior LF Antenna Replacement ... 22-626
Rear Interior LF Antenna Replacement 22-626
Rear Shelf LF Antenna Replacement 22-627
Rear Bumper LF Antenna Replacement ... 22-627
Keyless Buzzer Replacement 22-628
Ignition Switch Knob Replacement 22-628
Ignition Switch Control Unit Registration 22-629

Special Tools

Ref. No.	Tool Number	Description	Qty
①	07LAJ-PT3020A	Test Harness	1
②	07TAZ-001020A	Back Probe Adaptor	2
③	07WAZ-001010A	MPCS (MCIC) Service Connector	1
④	07AAJ-S3MA100	HID Bulb Test Light Assembly	1
⑤	07AAC-000A1A0	Relay Puller	1

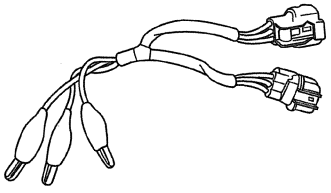

①

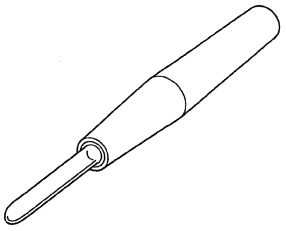

②

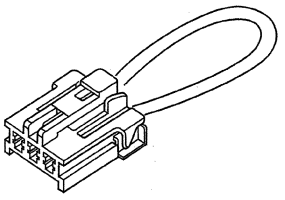

③



④

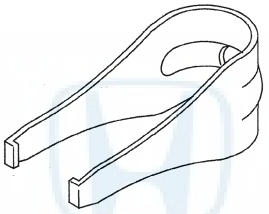

⑤

General Troubleshooting Information

Tips and Precautions

Before Troubleshooting

1. Check applicable fuses in the appropriate fuse/relay box.

2. Check the battery for damage, state of charge, and clean and tight connections.

NOTICE

- Do not quick-charge a battery unless the battery ground cable has been disconnected, otherwise you will damage the alternator diodes.
- Do not attempt to crank the engine with the battery ground cable loosely connected or you will severely damage the wiring.

Handling Connectors

- Make sure the connectors are clean and have no loose wire terminals.
- Make sure multiple cavity connectors are packed with dielectric grease (except watertight connectors).
- All connectors have push-down release type locks (A).

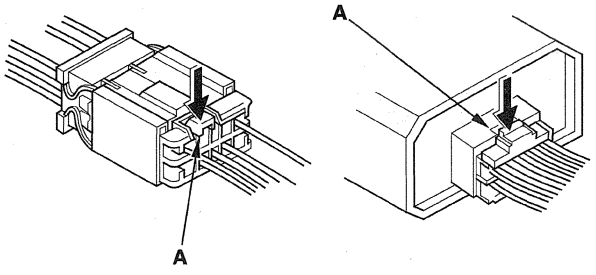

- Some connectors have a clip on their side used to attach them to a mount bracket on the body or on another component. This clip has a pull type lock.
- Some mounted connectors cannot be disconnected unless you first release the lock and remove the connector from its mount bracket (A).

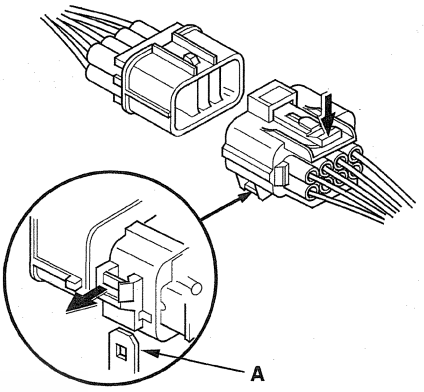

- Never try to disconnect connectors by pulling on their wires; pull on the connector halves instead.
- Always reinstall plastic covers.

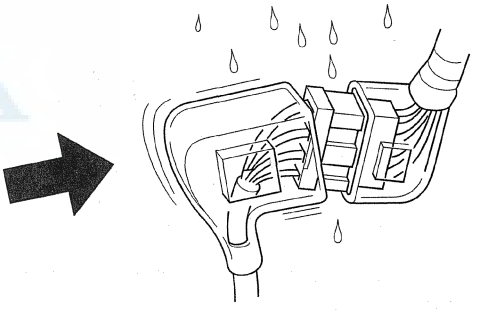

- Before connecting connectors, make sure the terminals (A) are in place and not bent.

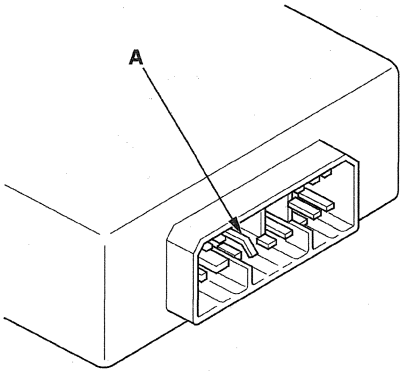

(cont'd)

General Troubleshooting Information (cont'd)

- Check for loose retainer (A) and rubber seals (B).

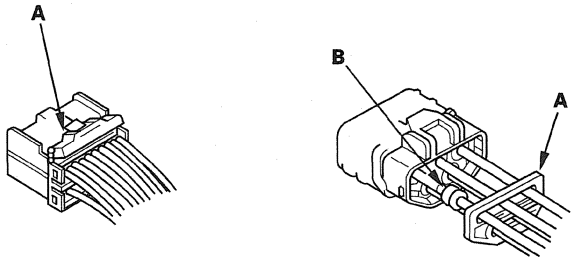

- The backs of some connectors are packed with dielectric grease. Add grease if necessary. If the grease is contaminated, replace it.

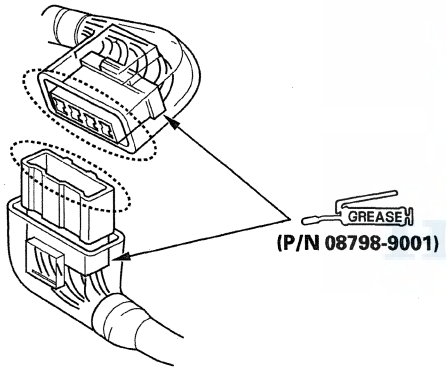

- Insert the connector all the way and make sure it is securely locked.
- Position wires so that the open end of the cover faces down.

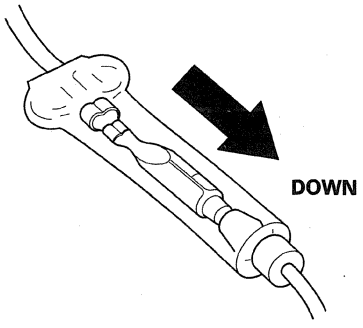

Handling Wires and Harnesses

- Secure wires and wire harnesses to the frame with their respective wire ties at the designated locations.
- Remove clips carefully; don't damage their locks (A).

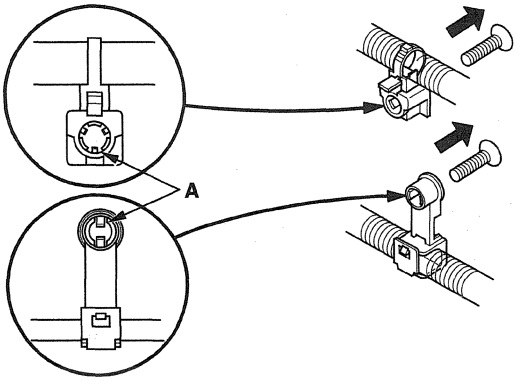

- After installing harness clips, make sure the harness doesn't interfere with any moving parts.
- Keep wire harnesses away from exhaust pipes and other hot parts, from sharp edges of brackets and holes, and from exposed screws and bolts.
- Seat grommets in their grooves properly (A). Do not leave grommets distorted (B).

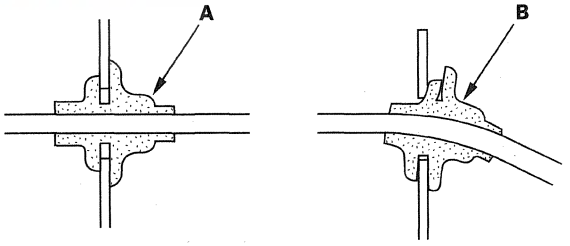

Testing and Repairs

- Do not use wires or harnesses with broken insulation. Replace them or repair them by wrapping the break with electrical tape.
- Never attempt to modify, splice, or repair SRS wiring. If there is an open or damage in SRS wiring or terminals, replace the harness.
- After installing parts, make sure that no wires are pinched under them.
- When using electrical test equipment, follow the manufacturer's instructions and those described in this manual.
- If possible, insert the probe of the tester from the wire side (except waterproof connector).

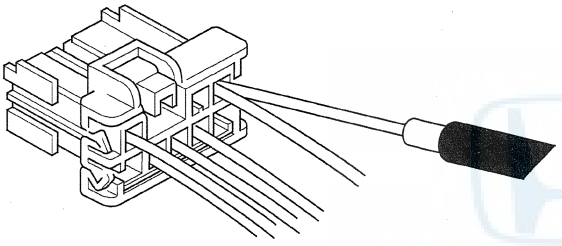

- Use back probe adaptor 07TAZ-001020A.

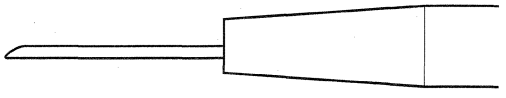

- Refer to the instructions in the Honda Terminal Kit for identification and replacement of connector terminals.

Five-step Troubleshooting

1. Verify The Complaint
   Turn on all the components in the problem circuit to verify the clients complaint. Note the symptoms. Do not begin disassembly or testing until you have narrowed down the problem area.

2. Analyze The Schematic
   Look up the schematic for the problem circuit. Determine how the circuit is supposed to work by tracing the current paths from the power feed through the circuit components to ground. If several circuits fail at the same time, the fuse or ground is a likely cause.

   Based on the symptoms and your understanding of the circuit operation, identify one or more possible causes of the problem.

3. Isolate The Problem By Testing The Circuit
   Make circuit tests to check the diagnosis you made in step 2. Keep in mind that a logical, simple procedure is the key to efficient troubleshooting. Test for the most likely cause of failure first. Try to make tests at points that are easily accessible.

4. Fix The Problem
   Once the specific problem is identified, make the repair. Be sure to use proper tools and safe procedures.

5. Make Sure The Circuit Works
   Turn on all components in the repaired circuit in all modes to make sure you've fixed the entire problem. If the problem was a blown fuse, be sure to test all of the circuits on the fuse. Make sure no new problems turn up and the original problem does not recur.

(cont'd)

General Troubleshooting Information (cont'd)

Wire Color Codes

The following abbreviations are used to identify wire colors in the circuit schematics:

WHT	White
YEL	Yellow
BLK	Black
BLU	Blue
GRN	Green
RED	Red
ORN	Orange
PNK	Pink
BRN	Brown
GRY	Gray
PUR	Purple
LT BLU	Light Blue
LT GRN	Light Green

The wire insulation has one color or one color with another color stripe. The second color is the stripe.

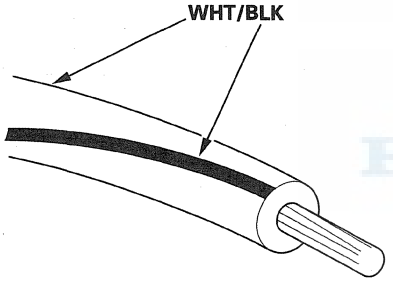

How to Check for DTCs with the Honda Diagnostic System (HDS)

NOTE: For specific operations, refer to the user's manual that came with the Honda Diagnostic System (HDS). Make sure the HDS is loaded with the latest software.

1. Connect the HDS to the data link connector (DLC) (A) located under the driver's side of the dashboard.

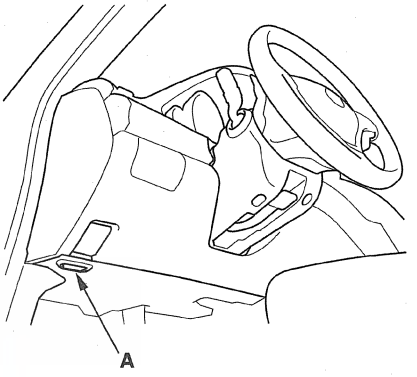

2. Turn the ignition switch to ON (II).
3. Make sure the HDS communicates with the vehicle, if it doesn't, troubleshoot the DLC circuit (see page 11-211).
4. Enter the BODY ELECTRICAL, then select the desired TEST MODE menu.
5. Check for DTCs with the HDS.

   NOTE: If the DTCs do not pertain to the selected menu, select the All DTC Check icon to view all Body Electrical DTCs.

6. If any DTCs are indicated, note them, and go to the indicated DTC troubleshooting.

Remote Registration and Reprogramming for Keyless Access System and Immobilizer System

Keyless Access System

Registration by the HDS is necessary when:

- Any of the remotes (A) are replaced.
- All of the remotes (A) are replaced.
- A new remote (A) is added.
- New remotes (A) are added.
- The keyless access control unit (B) is replaced.
- The ignition switch control unit (C) is replaced.
- The imoes unit (D) is replaced.
- Deleting the registration of a lost remote(s).
- The PCM is replaced.

NOTE: The keyless access control unit can store up to six remotes.

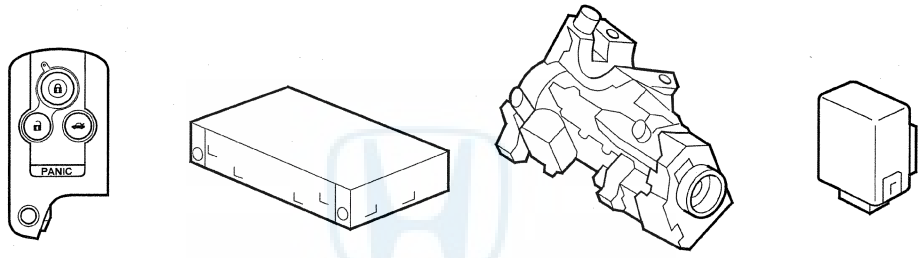

A B C D

Immobilizer System

Registration by the HDS is necessary when:

- A built-in key (A) is added or replaced.
- The immobilizer control unit-receiver (B) is replaced.
- The imoes unit (C) is replaced.
- The PCM is replaced.

NOTE: The immobilizer control unit-receiver can store up to six built-in keys.

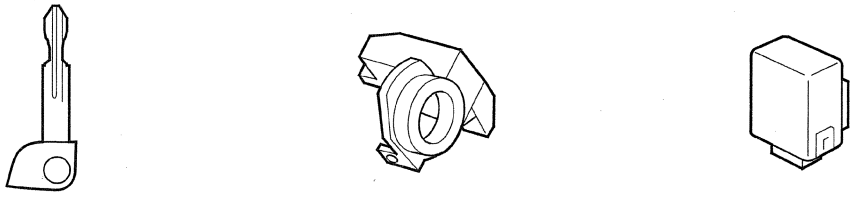

A B C

(cont'd)

Remote Registration and Reprogramming for Keyless Access System and Immobilizer System (cont'd)

Registration

1. Turn the ignition switch to ON (II) with the built-in key.
2. Connect the HDS to the data link connector.
3. Select KEYLESS ACCESS or IMMOBILIZER (depending on the part replaced)* from the SYSTEM SELECT menu.
   *: If registering the imoes unit, select IMMOBILIZER from the menu. (This is not necessary to register as a keyless access composed part.)
4. Enter TEST MODE menu, then select suitable menu from the HDS indications.

Relay and Control Unit Locations

Engine Compartment

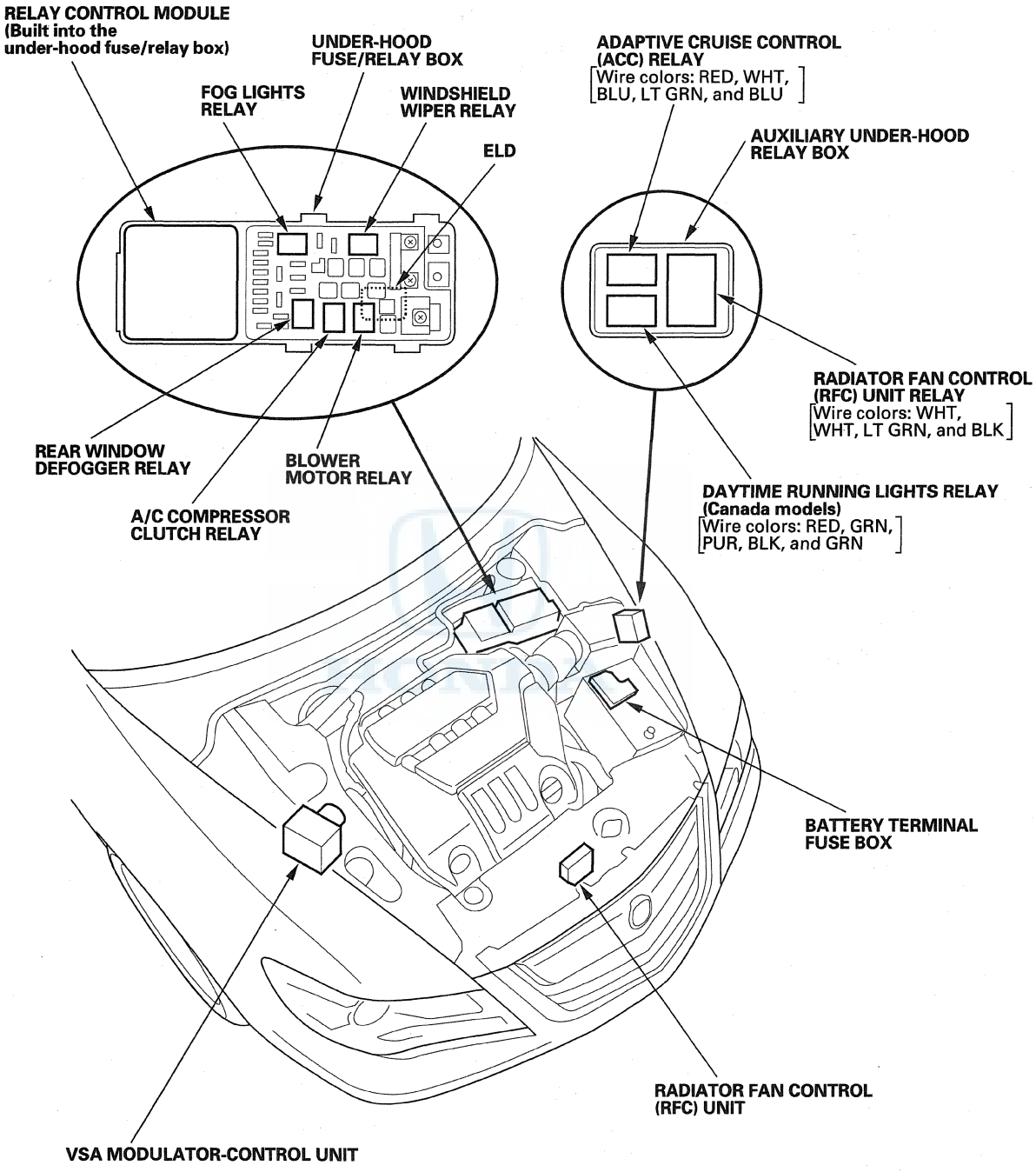

Relay and Control Unit Locations

Dashboard

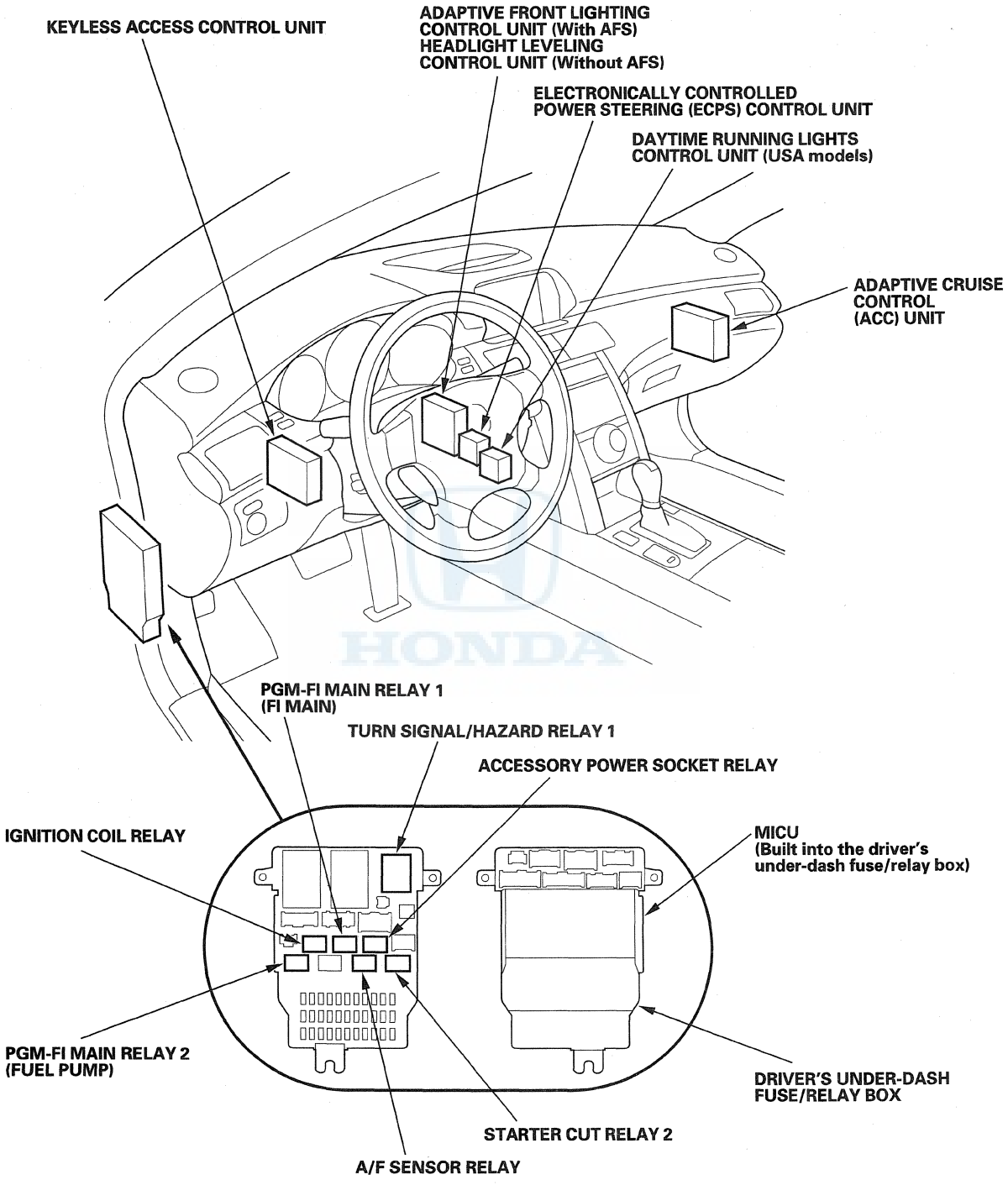

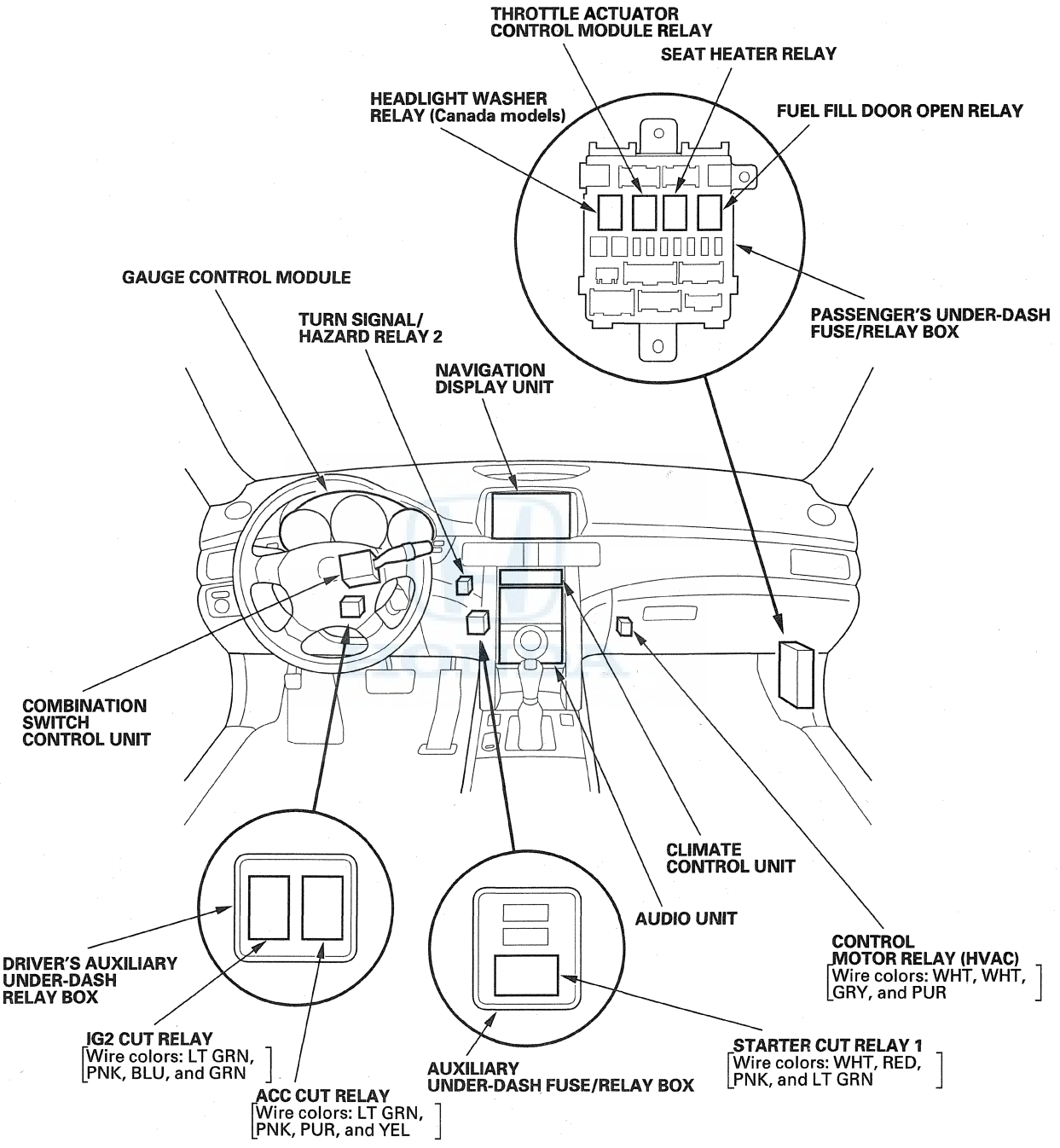
THROTTLE ACTUATOR CONTROL MODULE RELAY
SEAT HEATER RELAY
HEADLIGHT WASHER RELAY (Canada models)
FUEL FILL DOOR OPEN RELAY
GAUGE CONTROL MODULE
TURN SIGNAL/ HAZARD RELAY 2
NAVIGATION DISPLAY UNIT
PASSENGER'S UNDER-DASH FUSE/RELAY BOX
COMBINATION SWITCH CONTROL UNIT
CLIMATE CONTROL UNIT
AUDIO UNIT
CONTROL MOTOR RELAY (HVAC)
Wire colors: WHT, WHT, GRY, and PUR
DRIVER'S AUXILIARY UNDER-DASH RELAY BOX
IG2 CUT RELAY
Wire colors: LT GRN, PNK, BLU, and GRN
ACC CUT RELAY
Wire colors: LT GRN, PNK, PUR, and YEL
AUXILIARY UNDER-DASH FUSE/RELAY BOX
STARTER CUT RELAY 1
Wire colors: WHT, RED, PNK, and LT GRN

(cont'd)

Relay and Control Unit Locations

Dashboard (cont'd)

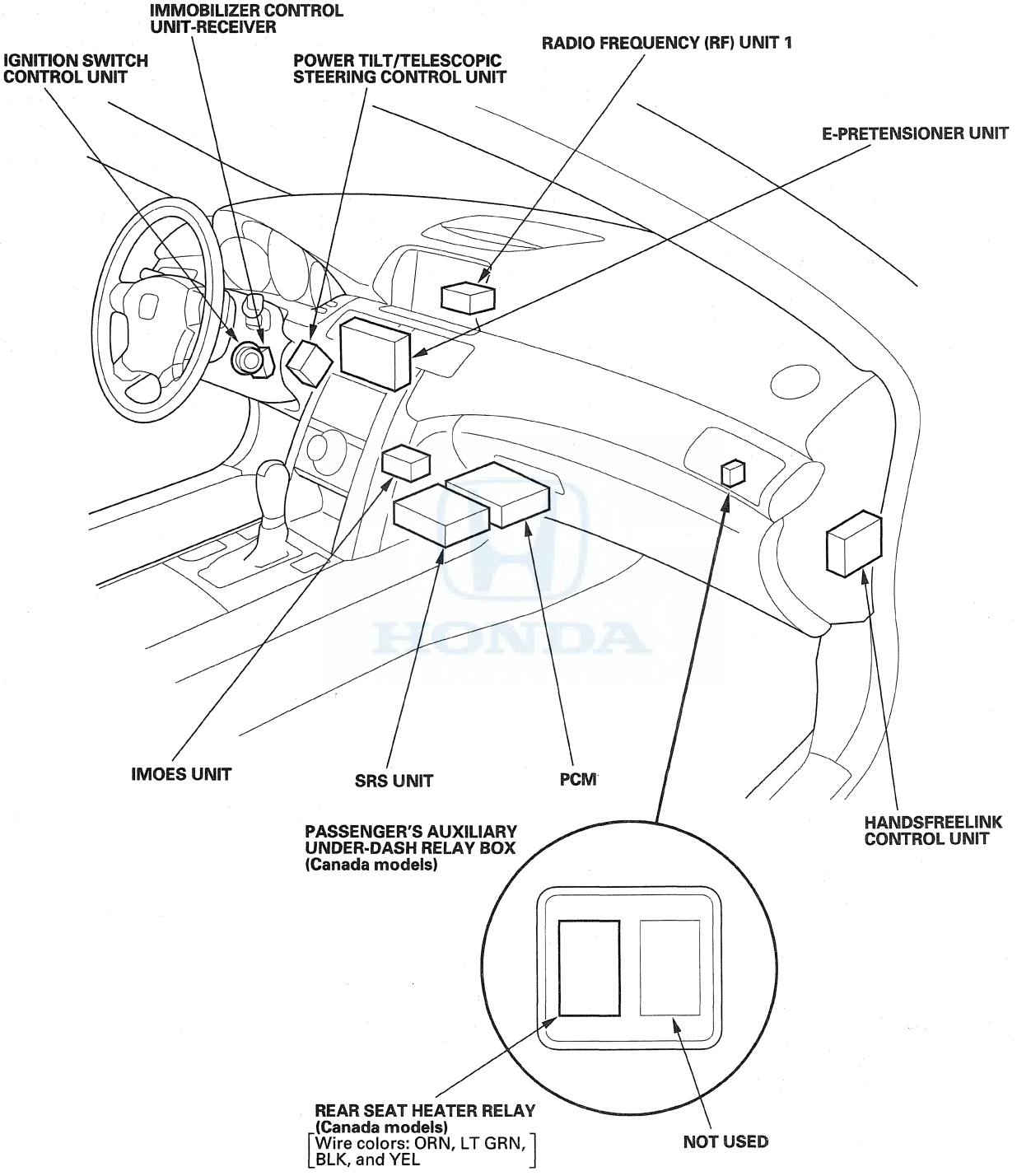

Roof and Trunk

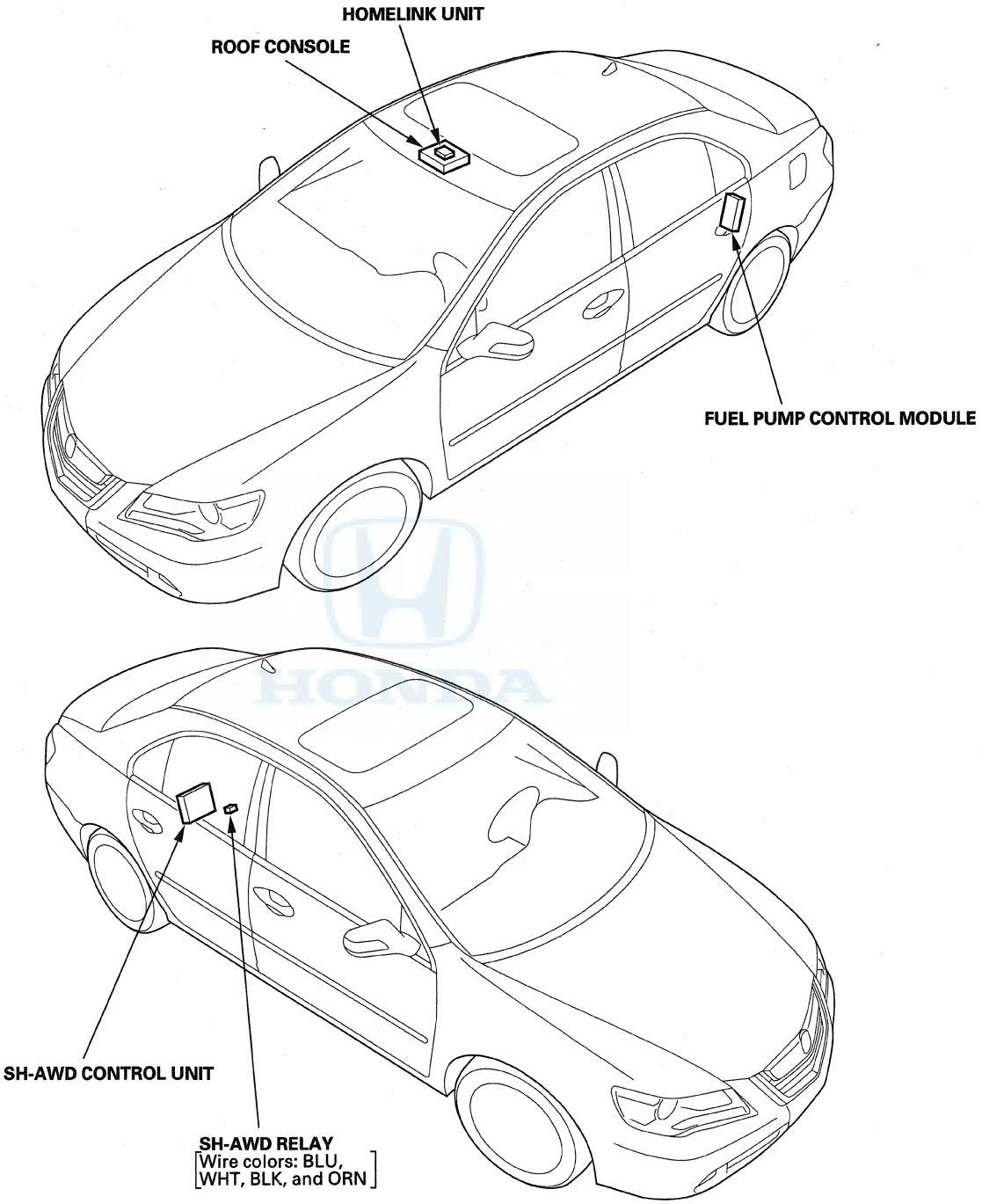

(cont'd)

Relay and Control Unit Locations

Roof and Trunk (cont'd)

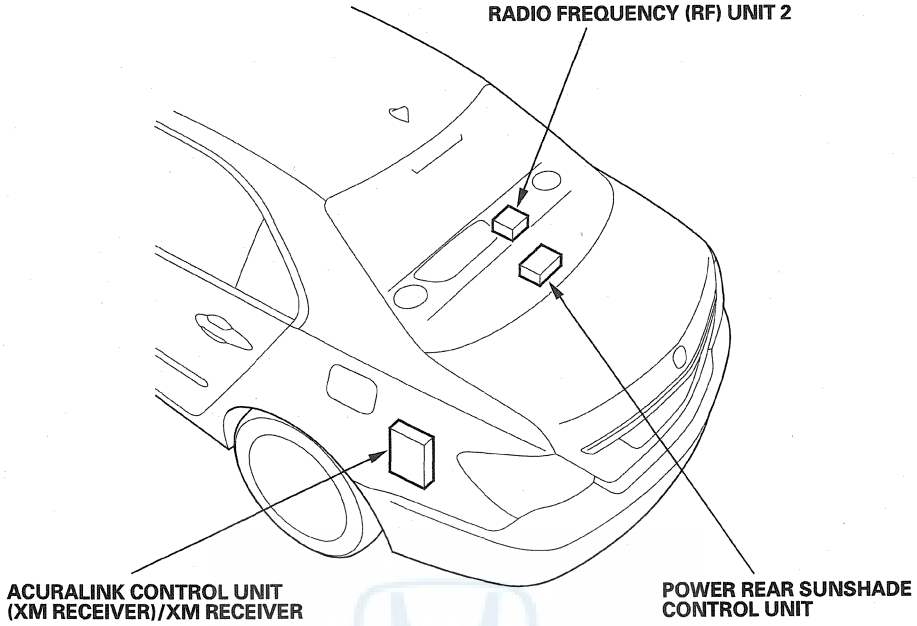

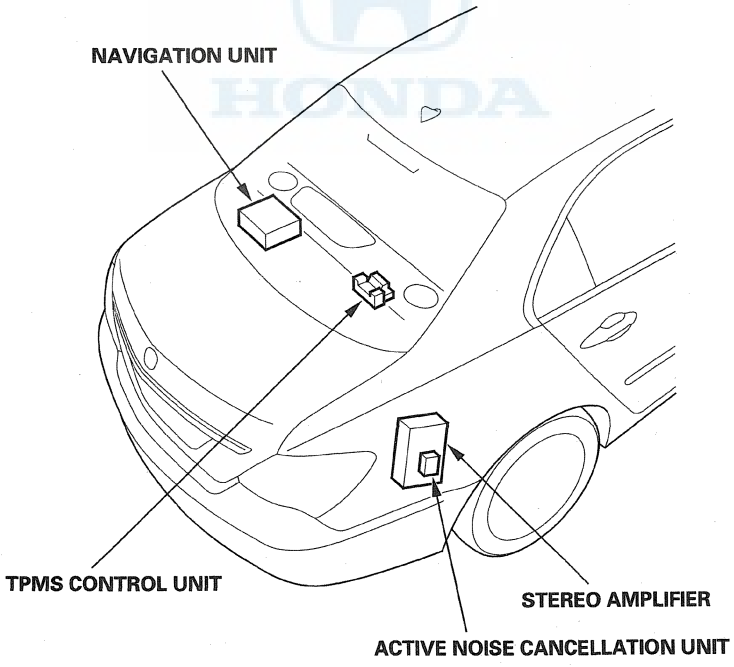

Door

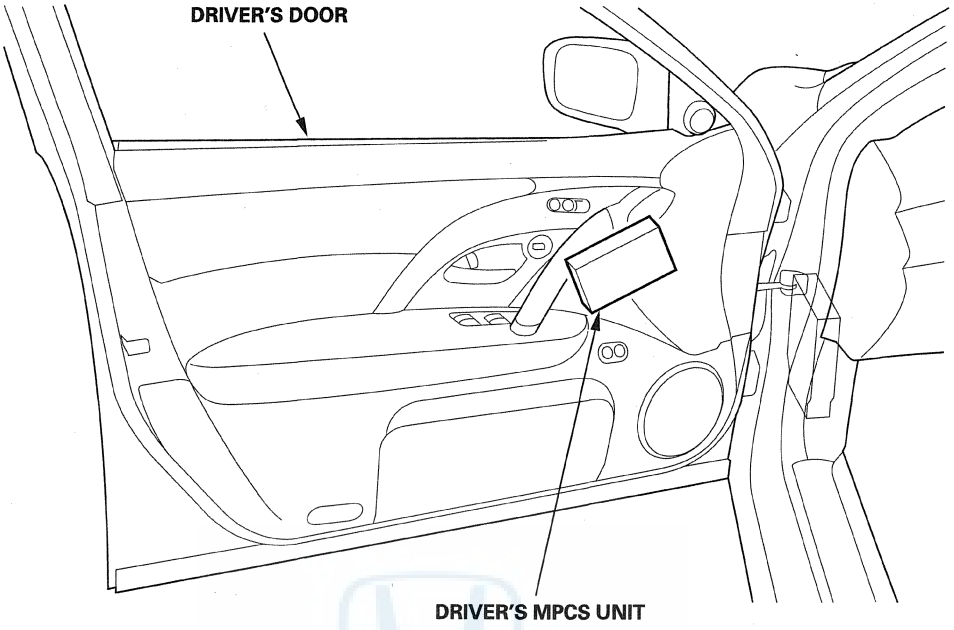
DRIVER'S DOOR
DRIVER'S MPCS UNIT

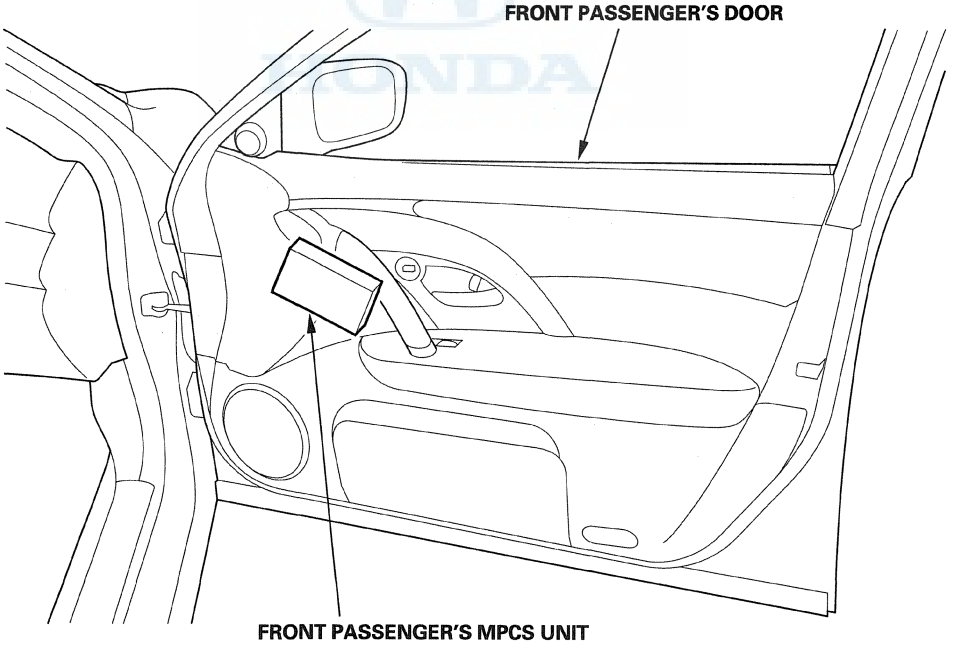
FRONT PASSENGER'S DOOR
FRONT PASSENGER'S MPCS UNIT

Relay and Control Unit Locations

Seat

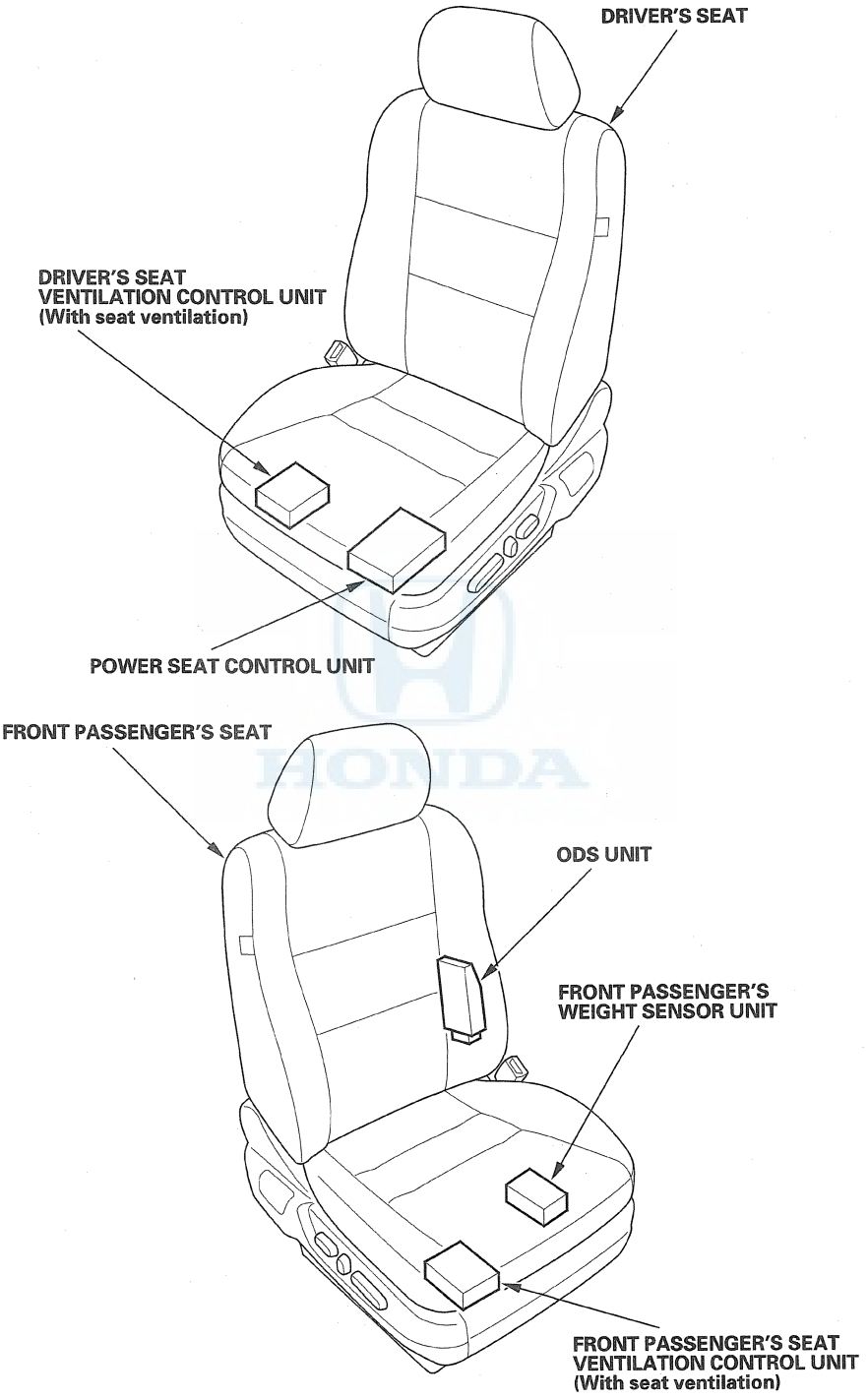

Connector Index

Identification numbers have been assigned to in-line connectors, junction connectors, and terminals. The number is preceded by the letter "C" for connectors "G" for ground terminals or "T" for non-ground terminals.

Harness	Location			Notes
	Engine Compartment	Dashboard	Others (Floor, Door, Trunk, and Roof)	
A/C compressor clutch subharness	C309 G351			(see page 22-71)
A/C wire harness		C502, C503		(see page 22-70)
Front accessory power socket subharness			C528	(see page 22-62)
Active noise cancellation subharness			C633	(see page 22-48)
Battery ground cable	(—) G1 and T2			(see page 22-19)
CKP sensor subharness	C151			(see page 22-22)
Console subharness			C551, C552	(see page 22-62)
Dashboard wire harness (around the steering column)		C519, C520		(see page 22-34)
Dashboard wire harness (center branch)		C521 through C528 G503, G504	C528, C551 G505	(see page 22-36)
Dashboard wire harness (left branch)		C301, C302, C303, C507 through C518 G501, G502	C601, C602	(see page 22-32)
Dashboard wire harness (right branch)		C201, C501, C502, C503, C529 G506	C651, C652, C771	(see page 22-38)
Driver's door subharness			C751, C752, C753	(see page 22-56)
Driver's door wire harness A			C754, 755, C756	(see page 22-56)
Driver's door wire harness B			C752, C753, C754, C757	(see page 22-56)
Driver's seat wire harness			C901, C902, C903	(see page 22-64)
Engine compartment wire harness (dash branch)		C301 through C307		(see page 22-28)
Engine compartment wire harness (left branch)	C104, C309 G301			(see page 22-26)
Engine compartment wire harness (right branch)	G201, G202	C201, C202 G401		(see page 22-30)
Engine ground cable	T4, G2			(see page 22-19)
Engine wire harness (front branch)	C104, C106, C108, C153 T101 and T102			(see page 22-20)
Engine wire harness (rear branch)	C101, C102, C103, C105, C107, C151, C152 G101			(see page 22-22)
E-pretensioner subharness			C991, C992, C993	(see page 22-72)
Floor subharness			C658, C659, C698, C699	(see page 22-52)

(cont'd)

Connector Index (cont'd)

Harness	Location			Notes
	Engine Compartment	Dashboard	Others (Floor, Door, Trunk, and Roof)	
Front passenger's door subharness			C771, C772, C774	(see page 22-58)
Front passenger's door wire harness A			C773, C776	(see page 22-58)
Front passenger's door wire harness B			C773, C774, C775	(see page 22-58)
Front passenger's seat wire harness			C931, C932	(see page 22-66)
Knock sensor subharness	C152			(see page 22-22)
Left rear door subharness			C782	(see page 22-60)
Left rear door wire harness			C781, C782, C783	(see page 22-60)
Left side wire harness (front branch)		C304	C601 through C604, C607 through C610, C631, C632, C751, C781, C901, C902, C903, C991 G601	(see page 22-40)
Left side wire harness (rear branch)			C606, C612 through C616, C653, C654, C655, C701, C951 G602, G603, G604	(see page 22-42)
Moonroof subharness			C851	(see page 22-48)
PCM wire harness	C101, C102, C103	C251, C501		(see page 22-24)
Rear differential subharness A			C698, T15	(see page 22-54)
Rear differential subharness B			C699	(see page 22-54)
Rear headrest actuator subharness			C961, C962, C963 T16, T17, T18	(see page 22-68)
Rear headrest subharness			C951, C961, C962, C963, C964	(see page 22-68)
Rear seat heater subharness			C964	(see page 22-68)
Rear shelf wire harness			C606, C656	(see page 22-50)
Rear window defogger ground wire			G851	(see page 22-50)
Rear wire harness			C701 G701	(see page 22-50)
Right rear door subharness			C792	(see page 22-61)
Right rear door wire harness			C791, C792, C793	(see page 22-61)
Right side wire harness (front branch)			C603, C604 C651, C652, C660, C661 C772, C791, C931, C932, C992, C993 G651, G653	(see page 22-44)
Right side wire harness (rear branch)			C633, C653 through C659, C662, C663 G652	(see page 22-46)
Roof wire harness			C631, C632, C851, C852	(see page 22-48)
Shift solenoid wire harness	C153			(see page 22-20)
Starter cable	(+), T1 and T3			(see page 22-19)
Throttle actuator control module subharness		C251		(see page 22-24)
Trunk subharness			C657, C831	(see page 22-52)
Trunk wire harness			C831, C833	(see page 22-52)

Connector to Harness Index

Starter Cable

Connector or Terminal	Ref	Cavities	Location	Connects to	Notes
T1	2		Left side of engine compartment	Under-hood fuse/relay box	
T3	1		Left side of engine compartment	Starter motor	
(+)	3		Battery	Battery positive terminal	

Battery Ground Cable

Connector or Terminal	Ref	Cavities	Location	Connects to	Notes
G1	5		Left side of engine compartment	Body ground, via battery ground cable	
T2	6		Left side of engine compartment	Transmission housing	
(−)	4		Battery	Battery negative terminal	

Engine Ground Cable

Connector or Terminal	Ref	Cavities	Location	Connects to	Notes
T4	7		Right side of engine compartment	Engine mount bracket	
G2	8		Right side of engine compartment	Engine ground, via engine ground cable	

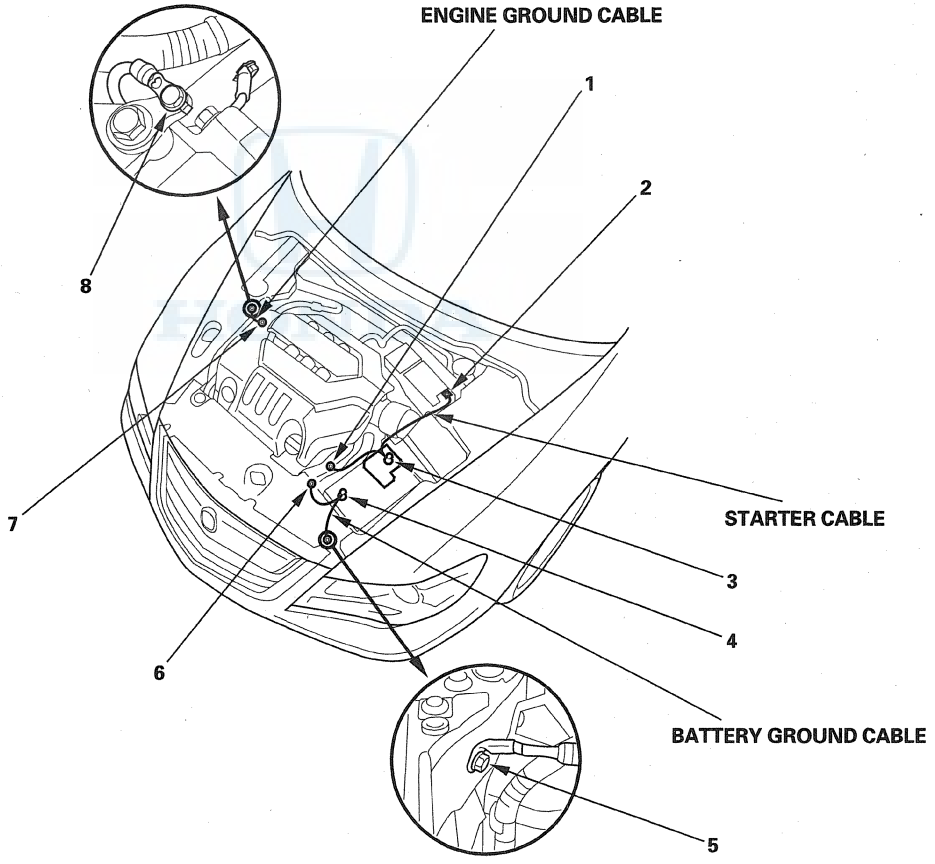

Connector to Harness Index (cont'd)

Engine Wire Harness (Front branch)

Connector or Terminal	Ref	Cavities	Location	Connects to	Notes
A/T clutch pressure control solenoid valve A	14	2	Transmission housing		
A/T clutch pressure control solenoid valve B	15	2	Transmission housing		
A/T clutch pressure control solenoid valve C	9	2	Transmission housing		
Alternator	30	4	Middle of engine compartment		
ATF temperature sensor	21	2	Transmission housing		
Engine coolant temperature (ECT) sensor 1	6	2	Left side of engine		
Exhaust gas recirculation (EGR) valve and position sensor	5	5	Left side of engine compartment		
Front A/F sensor (Bank 2, Sensor 1)	29	6	Exhaust manifold (front bank)		
Front secondary heated oxygen sensor (secondary HO2S) (Bank 2, Sensor 2)	28	4	Exhaust manifold (front bank)		
Ignition coil No. 4	2	3	Middle of engine		
Ignition coil No. 5	3	3	Middle of engine		
Ignition coil No. 6	4	3	Middle of engine		
Input shaft (mainshaft) speed sensor	25	3	Transmission housing		
Manifold absolute pressure (MAP) sensor	7	3	Left side of engine compartment		
Output shaft (countershaft) speed sensor	23	3	Transmission housing		
Starter solenoid	26	1	Left side of engine compartment		
Throttle actuator and throttle position sensor	8	6	Middle of engine compartment		
Transmission range switch	22	10	Transmission housing		
3rd clutch transmission fluid pressure switch	24	1	Transmission housing		
4th clutch transmission fluid pressure switch	27	1	Transmission housing		
C104	11	1	Left side of engine compartment	Engine compartment wire harness (see page 22-26)	
C106 (Junction connector)	12	24	Left side of engine compartment		
C108 (Junction connector)	13	24	Left side of engine compartment		
C153	20	5	On the transmission housing	Shift solenoid wire harness	
T101	10		Under-hood fuse/relay box	Under-hood fuse/relay box (see page 22-73).	
T102	1		Middle of engine compartment	Alternator	

Shift Solenoid Wire Harness

Connector or Terminal	Ref	Cavities	Location	Connects to	Notes
Shift solenoid valve A	19	1	In the transmission		
Shift solenoid valve B	18	1	In the transmission		
Shift solenoid valve C	17	1	In the transmission		
Shift solenoid valve D	16	1	In the transmission		
C153	20	5	On the transmission housing	Engine wire harness	

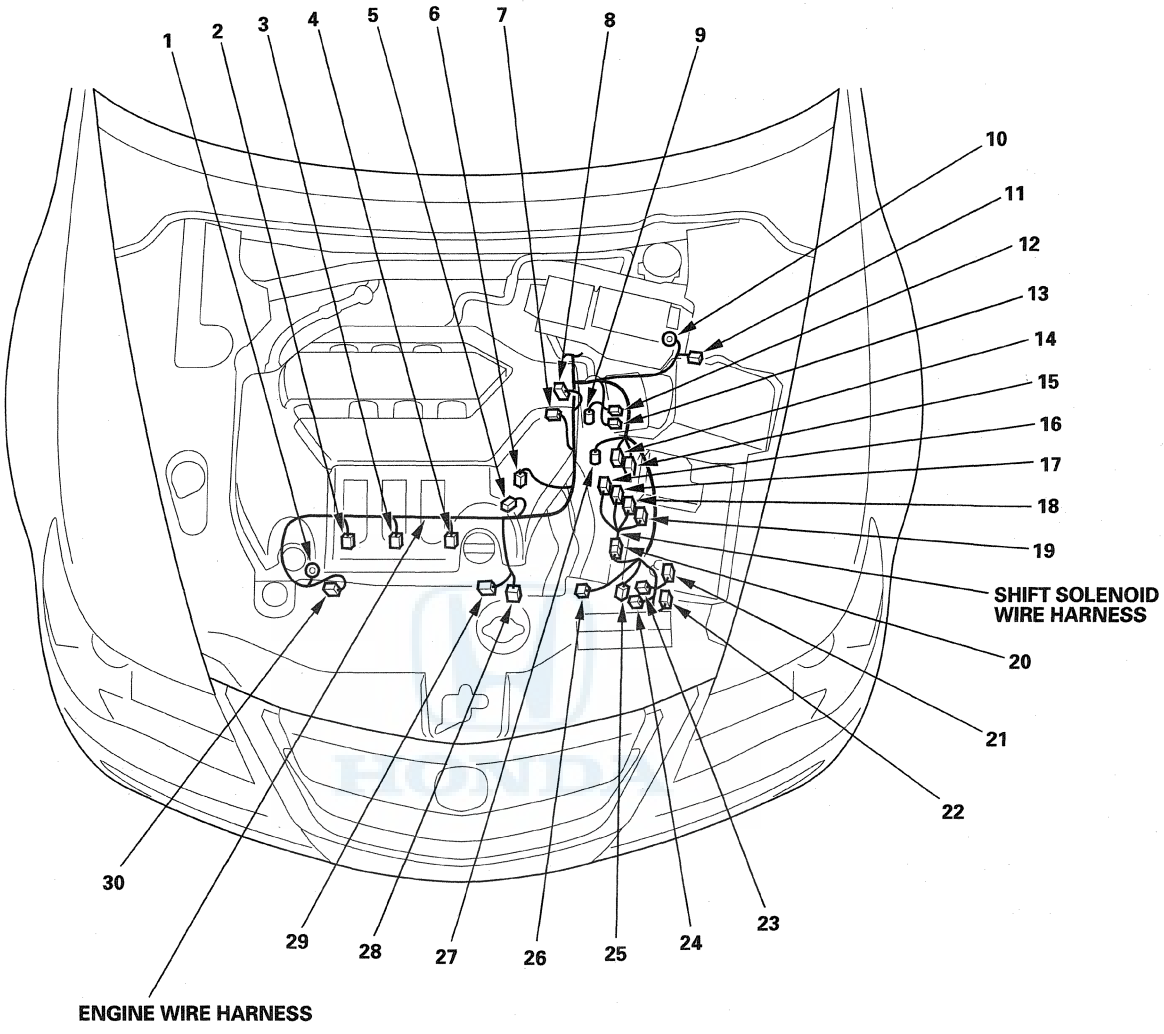
1
2
3
4
5
6
7
8
9
10
11
12
13
14
15
16
17
18
19
SHIFT SOLENOID
WIRE HARNESS
20
21
22
23
24
25
26
27
28
29
30
ENGINE WIRE HARNESS

Connector to Harness Index (cont'd)

Engine Wire Harness (Rear branch)

Connector or Terminal	Ref	Cavities	Location	Connects to	Notes
CMP sensor	27	3	Right side of engine		
Engine mount control solenoid valve	12	2	Left side of engine compartment		
Engine oil pressure switch	26	1	Right side of engine		
EVAP canister purge valve	13	2	Left side of engine compartment		
Ignition coil No. 1	3	3	Middle of engine		
Ignition coil No. 2	4	3	Middle of engine		
Ignition coil No. 3	6	3	Middle of engine		
Injector No. 1	18	2	Middle of engine		
Injector No. 2	17	2	Middle of engine		
Injector No. 3	16	2	Middle of engine		
Injector No. 4	22	2	Middle of engine		
Injector No. 5	20	2	Middle of engine		
Injector No. 6	19	2	Middle of engine		
Intake manifold tuning (IMT) actuator	24	5	Right side of engine		
Rear A/F sensor (Bank 1, Sensor 1)	15	6	Exhaust manifold (rear bank)		
Rear secondary heated oxygen sensor (secondary HO2S) (Bank 1, Sensor 2)	14	4	Exhaust manifold (rear bank)		
Rocker arm oil control solenoid	1	1	Right side of engine		
Rocker arm oil pressure switch	28	2	Right side of engine		
2nd clutch transmission fluid pressure switch	7	1	Left side of engine compartment		
C101	8	33	Left side of engine compartment	PCM wire harness (see page 22-24)	
C102	9	33	Left side of engine compartment	PCM wire harness (see page 22-24)	
C103	10	23	Left side of engine compartment	PCM wire harness (see page 22-24)	
C105 (Junction connector)	5	12	Middle of engine compartment		
C107 (Junction connector)	11	24	Middle of engine compartment		
C151	2	6	Right side of engine compartment	CKP sensor subharness	
C152	23	1	Right side of engine compartment	Knock sensor subharness	
G101	29		Right side of engine compartment	Body ground, via engine wire harness	

CKP Sensor Subharness

Connector or Terminal	Ref	Cavities	Location	Connects to	Notes
CKP sensor A/B	25	6	Right side of engine		
C151	2	6	Right side of engine compartment	Engine wire harness	

Knock Sensor Subharness

Connector or Terminal	Ref	Cavities	Location	Connects to	Notes
Knock sensor	21	1	Middle of engine		
C152	23	1	Right side of engine compartment	Engine wire harness	

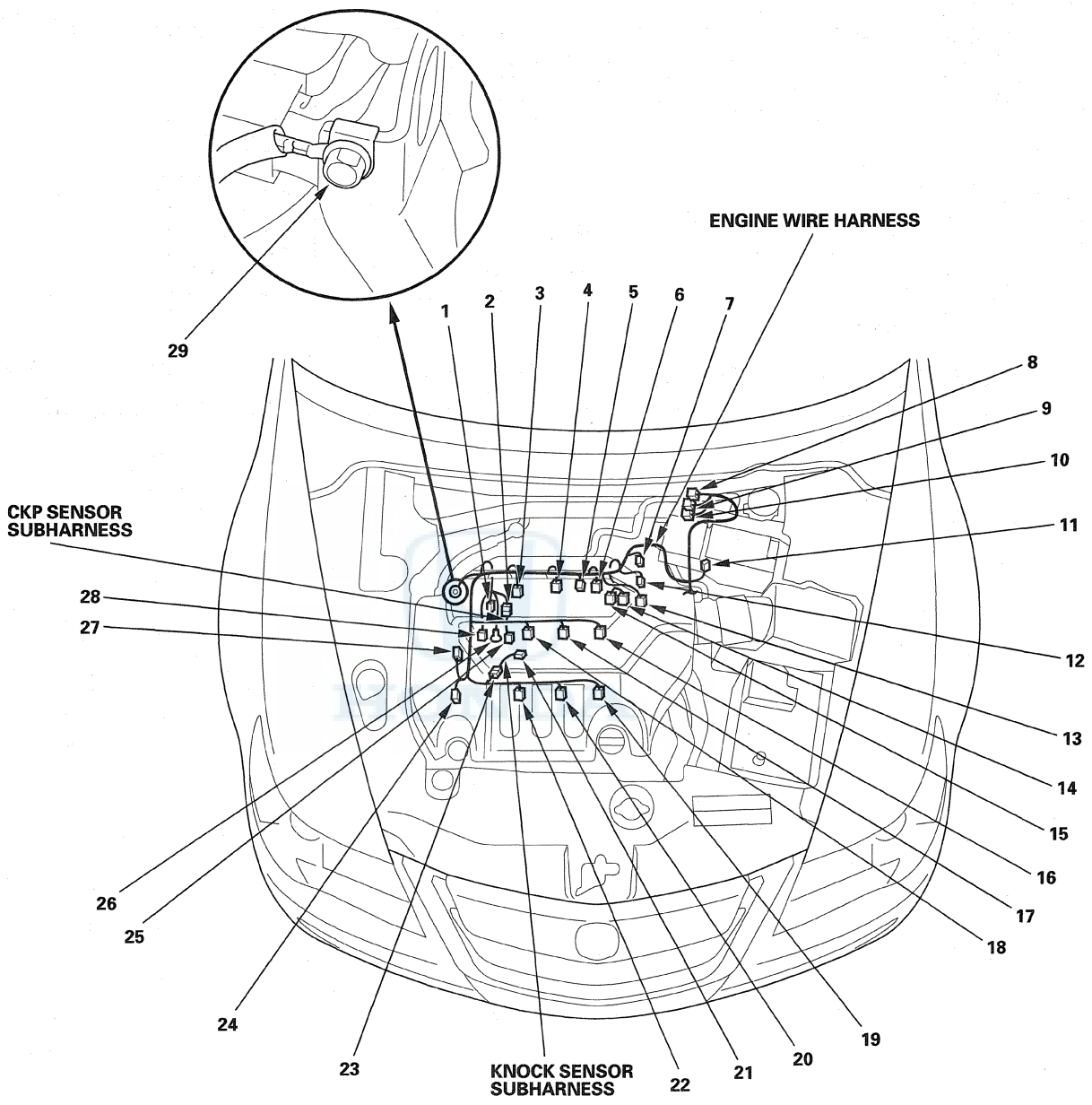
ENGINE WIRE HARNESS
CKP SENSOR SUBHARNESS
KNOCK SENSOR SUBHARNESS
1
2
3
4
5
6
7
8
9
10
11
12
13
14
15
16
17
18
19
20
21
22
23
24
25
26
27
28
29

Connector to Harness Index (cont'd)

PCM Wire Harness

Connector or Terminal	Ref	Cavities	Location	Connects to	Notes
PCM connector A	4	31	Under middle side of dash		
PCM connector B	5	24	Under middle side of dash		
PCM connector C	6	22	Under middle side of dash		
C101	3	33	Left side of engine compartment	Engine wire harness (see page 22-22)	
C102	2	33	Left side of engine compartment	Engine wire harness (see page 22-22)	
C103	1	23	Left side of engine compartment	Engine wire harness (see page 22-22)	
C251	7	13	Under middle of dash	Throttle actuator control module subharness	
C501	9	17	Under middle of dash	Dashboard wire harness (see page 22-38)	

Throttle Actuator Control Module Subharness

Connector or Terminal	Ref	Cavities	Location	Connects to	Notes
Throttle actuator control module	8	16	Under right side of dash		
C251	7	13	Under middle of dash	PCM wire harness	

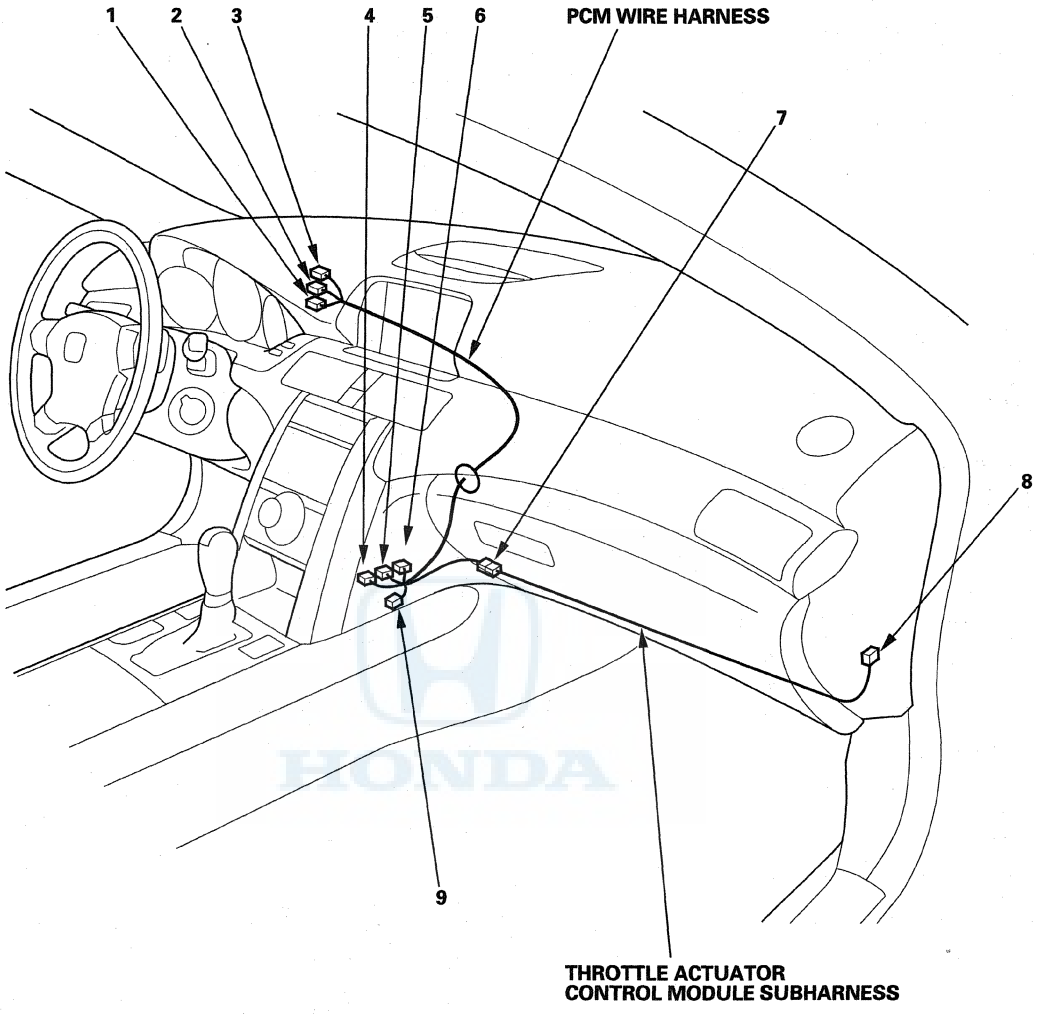
1
2
3
4
5
6
PCM WIRE HARNESS
7
8
9
THROTTLE ACTUATOR
CONTROL MODULE SUBHARNESS

Connector to Harness Index (cont'd)

Engine Compartment Wire Harness (Left branch)

Connector or Terminal	Ref	Cavities	Location	Connects to	Notes
Adaptive cruise control relay	19	5	Auxiliary under-hood relay box		* 1
Battery terminal fuse box (+)	38	—	Left side of engine compartment		
Brake fluid level switch	13	2	Left side of engine compartment		
Daytime running lights relay	21	5	Auxiliary under-hood relay box		Canada models
ECPS valve	14	6	Left side of engine compartment		
Horn (high)	32	1	Behind left side of front bumper		
Horn (low)	35	1	Front of engine compartment		
Left adaptive front lighting gearbox connector	25	8	Behind left headlight		* 2
Left fog light	27	2	Behind left side of front bumper		
Left front brake fluid pressure sensor	11	3	Left side of engine compartment		* 1
Left front impact sensor	23	2	Behind left side of front bumper		
Left front TPMS initiator	22	3	Behind left side of engine compartment		
Left front parking light	24	2	Behind left headlight		
Left front turn signal light	29	3	Behind left headlight		
Left front wheel speed sensor	17	2	Left side of engine compartment		
Left headlight (high)	30	2	Behind left headlight		
Left headlight (low)	26	2	Behind left headlight		
Left headlight leveling motor connector	28	3	Behind left headlight		
MAF sensor/IAT sensor	39	5	On the air cleaner box		
Millimeter wave radar	33	5	Front of engine compartment		* 1
Radiator fan control (RFC) unit connector A	37	3	Front of engine compartment		
Radiator fan control (RFC) unit connector B	36	1	Front of engine compartment		
Radiator fan control (RFC) unit relay	20	4	Auxiliary under-hood relay box		
Right front brake fluid pressure sensor	12	3	Left side of engine compartment		* 1
Security hood switch	34	2	Front of engine compartment		
Under-hood fuse/relay box connector A (see page 22-73)	2	3	Behind under-hood fuse/relay box	ELD	
Under-hood fuse/relay box connector B (see page 22-73)	3	1	Behind under-hood fuse/relay box		
Under-hood fuse/relay box connector C (see page 22-73)	4	2	Behind under-hood fuse/relay box		
Under-hood fuse/relay box connector D (see page 22-73)	7	9	Behind under-hood fuse/relay box		
Under-hood fuse/relay box connector E (see page 22-73)	5	16	Behind under-hood fuse/relay box		
Under-hood fuse/relay box connector F (see page 22-73)	6	20	Behind under-hood fuse/relay box		
Under-hood fuse/relay box connector G (see page 22-73)	1	2	Behind under-hood fuse/relay box		
Under-hood fuse/relay box connector H (see page 22-73)	8	14	Behind under-hood fuse/relay box		
Under-hood fuse/relay box connector J (see page 22-73)	10	10	Behind under-hood fuse/relay box		
Under-hood fuse/relay box connector K (see page 22-73)	9	5	Behind under-hood fuse/relay box		
Windshield wiper motor	15	5	Left side of engine compartment		
C104	18	1	Left side of engine compartment	Engine wire harness (see page 22-20)	
C309	31	6	Behind left side of front bumper	A/C compressor clutch subharness (see page 22-71)	
G301	16		Behind left side of front bumper	Body ground, via engine compartment wire harness	

* 1: With ACC
* 2: With AFS

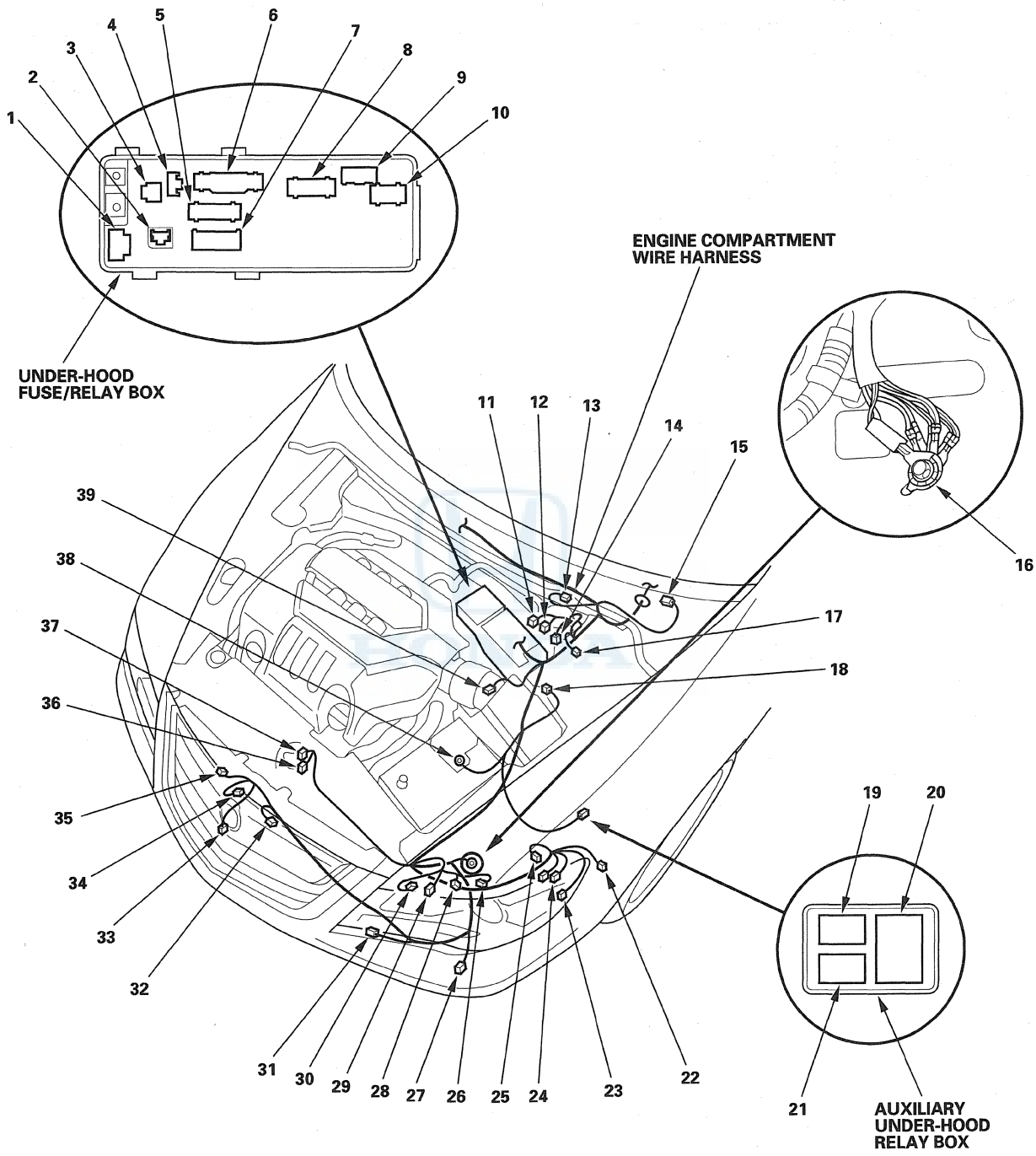
1
2
3
4
5
6
7
8
9
10
UNDER-HOOD
FUSE/RELAY BOX
ENGINE COMPARTMENT
WIRE HARNESS
11
12
13
14
15
16
17
18
19
20
21
AUXILIARY
UNDER-HOOD
RELAY BOX
22
23
24
25
26
27
28
29
30
31
32
33
34
35
36
37
38
39

Connector to Harness Index (cont'd)

Engine Compartment Wire Harness (Dash branch)

Connector or Terminal	Ref	Cavities	Location	Connects to	Notes
Accelerator pedal position (APP) sensor	7	6	Under left side of dash		
Adaptive front lighting control unit	9	40	Under left side of dash		* 2
Daytime running lights control unit	11	14	Under left side of dash		USA models
Driver's under-dash fuse/relay box connector B (see page 22-75)	2	6	Left kick panel		
Driver's under-dash fuse/relay box connector C (see page 22-75)	1	12	Left kick panel		
Driver's under-dash fuse/relay box connector D (see page 22-75)	3	17	Left kick panel		
ECPS unit	10	12	Under middle of dash		
Headlight leveling control unit	9	16	Under left side of dash		* 3
Starter cut relay 1	12	4	Auxiliary under-dash fuse/relay box		
C301	14	34	Under left side of dash	Dashboard wire harness (see page 22-32)	
C302	13	3	Under left side of dash	Dashboard wire harness (see page 22-32)	
C303	15	4	Under left side of dash	Dashboard wire harness (see page 22-32)	
C304	4	5	Under left side of dash	Left side wire harness (see page 22-40)	
C305 (Junction connector)	5	12	Under left side of dash		
C306 (Junction connector)	6	12	Under left side of dash		
C307 (Junction connector)	8	12	Under left side of dash		* 1

* 1: With ACC
* 2: With AFS
* 3: Without AFS

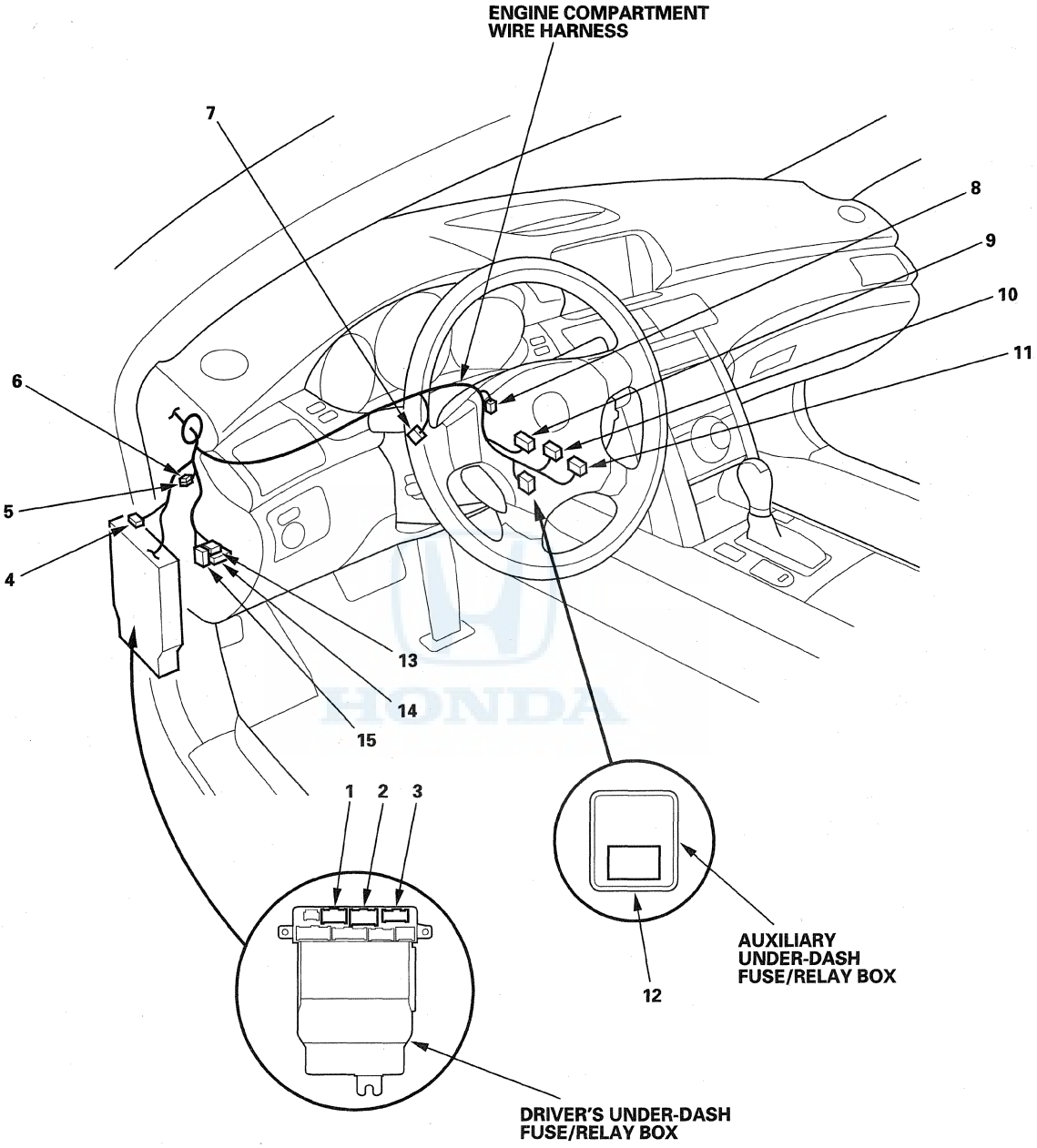
ENGINE COMPARTMENT
WIRE HARNESS
7
8
9
10
11
6
5
4
13
14
15
1
2
3
12
AUXILIARY
UNDER-DASH
FUSE/RELAY BOX
DRIVER'S UNDER-DASH
FUSE/RELAY BOX

Connector to Harness Index (cont'd)

Engine Compartment Wire Harness (Right branch)

Connector or Terminal	Ref	Cavities	Location	Connects to	Notes
A/C pressure sensor	9	3	Behind right headlight		
Adaptive cruise control (ACC) unit	6	20	Under right side of dash		* 1
Headlight washer motor	17	2	Behind right side of front bumper		Canada models
Outside air temperature sensor	13	2	Behind right side of front bumper		
Passenger's under-dash fuse/relay box connector A (see page 22-76)	1	1	Right kick panel		
Passenger's under-dash fuse/relay box connector B (see page 22-76)	2	10	Right kick panel		
Passenger's under-dash fuse/relay box connector J (see page 22-76)	3	13	Right kick panel		
Power steering pressure (PSP) switch	24	2	Right side of engine compartment		
Right adaptive front lighting gearbox	18	8	Behind right headlight		* 2
Right fog light	15	2	Behind right side of front bumper		
Right front impact sensor	20	2	Behind right side of front bumper		
Right front parking light	21	2	Behind right headlight		
Right front TPMS initiator	19	3	Right side of engine compartment		
Right front turn signal light	10	3	Behind right headlight		
Right front wheel speed sensor	25	2	Right side of engine compartment		
Right headlight (high)	11	2	Behind right headlight		
Right headlight (low)	16	2	Behind right headlight		
Right headlight leveling motor	12	3	Behind right headlight		
VSA modulator-control unit	8	47	Right side of engine compartment		
Washer fluid level switch	23	2	Behind right side of front bumper		
Windshield washer motor	22	2	Behind right side of front bumper		
C201	4	13	Right side of dash	Dashboard wire harness (see page 22-38)	
C202 (Junction connector)	26	12	Under right side of dash		
G201	14		Behind right headlight	Body ground, via engine compartment wire harness	
G202	7		Right side of engine compartment	Body ground, via engine compartment wire harness	
G401	5		Under right side of dash	Body ground, via engine compartment wire harness	

* 1: With ACC
* 2: With AFS

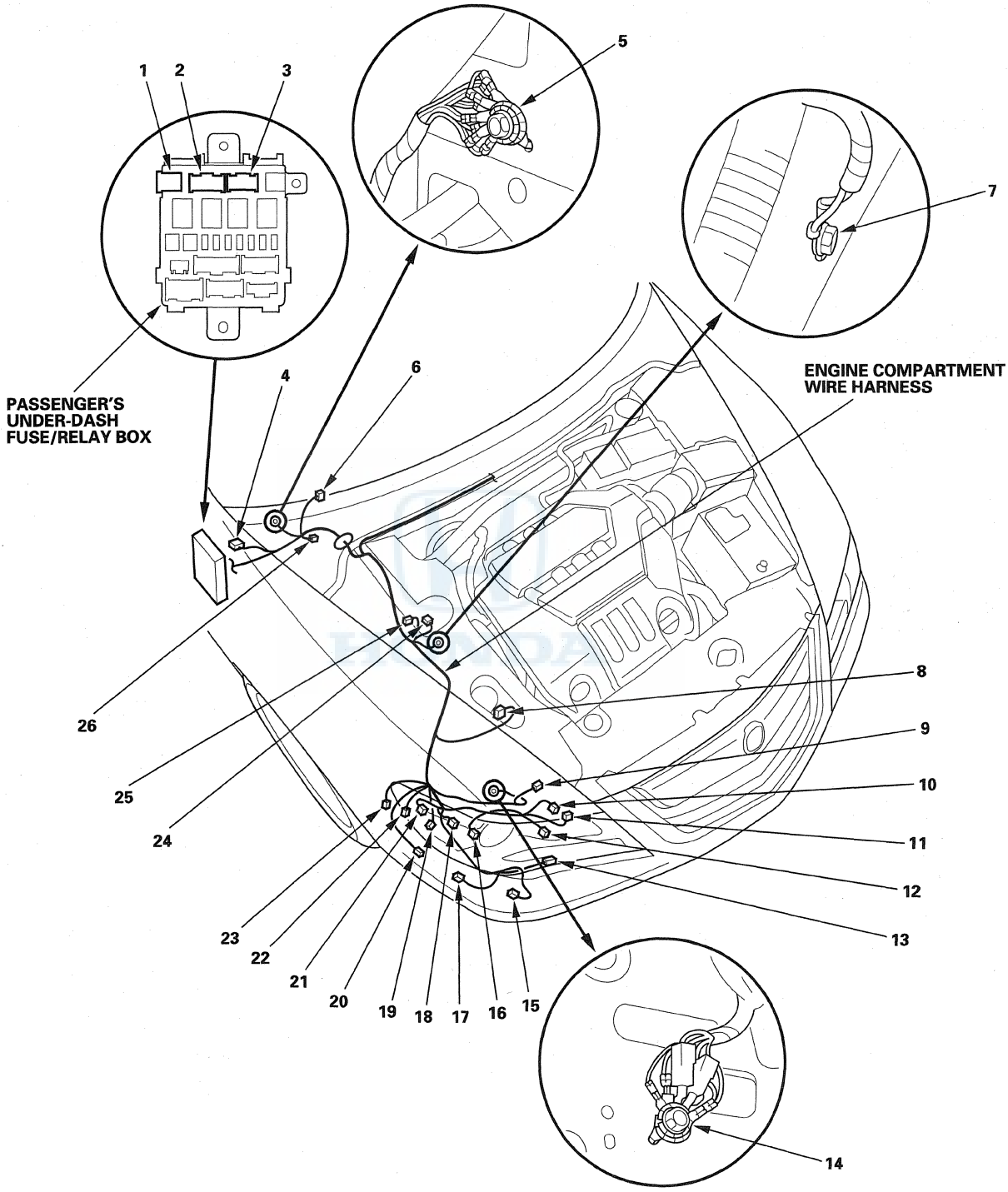
1
2
3
5
7
PASSENGER'S
UNDER-DASH
FUSE/RELAY BOX
4
6
ENGINE COMPARTMENT
WIRE HARNESS
26
25
24
23
22
21
20
19
18
17
16
15
8
9
10
11
12
13
14

Connector to Harness Index (cont'd)

Dashboard Wire Harness (Left branch)

Connector or Terminal	Ref	Cavities	Location	Connects to	Notes
VSA OFF switch	13	6	Left side of dash		* 1
AFS OFF/VSA OFF switch	13	6	Left side of dash		* 2
AFS OFF/VSA OFF/CMBS switch	13	6	Left side of dash		* 3
Brake pedal position switch	18	4	Under left side of dash		
Dash lights brightness controller	24	6	Middle of dash		
Data link connector	31	16	Under left side of dash		
Driver's footwell light	27	2	Under left side of dash		
Driver's under-dash fuse/relay box connector A (see page 22-75)	3	6	Left kick panel		
Driver's under-dash fuse/relay box connector N (see page 22-75)	2	45	Left kick panel		
Driver's under-dash fuse/relay box connector P (MICU) (see page 22-75)	7	30	Left kick panel		
Driver's under-dash fuse/relay box connector R (see page 22-75)	4	2	Left kick panel		
Driver's under-dash fuse/relay box connector S (see page 22-75)	5	2	Left kick panel		
Driver's under-dash fuse/relay box connector T (see page 22-75)	6	6	Left kick panel		
Driver's under-dash fuse/relay box connector X (see page 22-75)	1	39	Left kick panel		
Driver's vent air temperature sensor	12	2	Behind gauge		
Gauge control module connector A	19	20	Behind gauge		
Gauge control module connector B	14	28	Behind gauge		
Hazard warning switch/passenger's airbag cutoff indicator	23	6	Middle of dash		
Headlight washer switch	11	5	Left side of dash		Canada models
In-car temperature sensor	25	4	In the steering column		
Keyless access control unit connector A	16	31	Under left side of dash		
Keyless access control unit connector C	15	17	Under left side of dash		
Power mirror switch	10	10	Left side of dash		
Turn signal/hazard relay 2 (sounder)	26	3	Middle of dash		
C301	28	34	Under left side of dash	Engine compartment wire harness (see page 22-28)	
C302	9	3	Under left side of dash	Engine compartment wire harness (see page 22-28)	
C303	8	4	Under left side of dash	Engine compartment wire harness (see page 22-28)	
C507 (Junction connector)	39	12	Under left side of dash		
C508 (Junction connector)	40	12	Under left side of dash		
C509 (Junction connector)	41	12	Under left side of dash		
C510 (Junction connector)	36	12	Under left side of dash		
C511 (Junction connector)	33	12	Under left side of dash		
C512 (Junction connector)	37	12	Under left side of dash		
C513 (Junction connector)	32	12	Under left side of dash		
C514 (Junction connector)	17	12	Under left side of dash		
C515 (Junction connector)	22	12	Under middle of dash		
C516 (Junction connector)	20	12	Under middle of dash		
C517 (Junction connector)	21	12	Under middle of dash		
C518 (Junction connector)	38	12	Under left side of dash		
C601	35	23	Under left side of dash	Left side wire harness (see page 22-40)	
C602	34	34	Under left side of dash	Left side wire harness (see page 22-40)	
G501	30		Left kick panel	Body ground, via dashboard wire harness	
G502	29		Left kick panel	Body ground, via dashboard wire harness	

* 1: USA and Canada RL models
* 2: Hawaii and USA TECH model
* 3: USA TECH with ACC and CMBS model and Canada Premium model

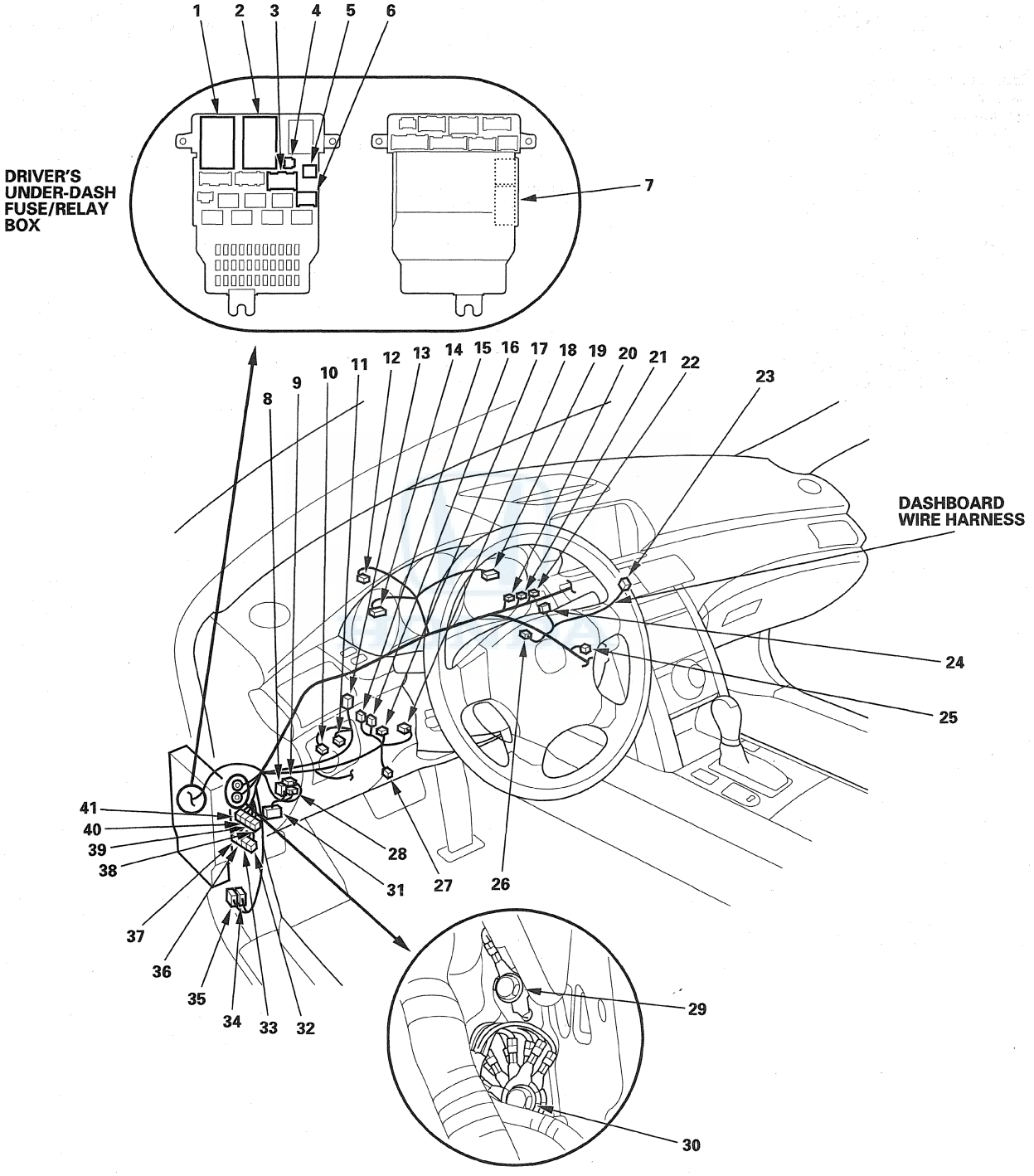
DRIVER'S UNDER-DASH FUSE/RELAY BOX
1
2
3
4
5
6
7
8
9
10
11
12
13
14
15
16
17
18
19
20
21
22
23
DASHBOARD WIRE HARNESS
24
25
26
27
28
29
30
31
32
33
34
35
36
37
38
39
40
41

Connector to Harness Index (cont'd)

Dashboard Wire Harness (Around the steering column)

Connector or Terminal	Ref	Cavities	Location	Connects to	Notes
ACC cut relay	15	5	Driver's auxiliary under-dash relay box		
Cable reel connector B	5	20	In steering column cover		
Cable reel connector A	10	4	In steering column cover		
Ignition switch	11	6	In steering column cover		
Ignition switch control unit	9	10	In steering column cover		
IG2 cut relay	16	5	Driver's auxiliary under-dash relay box		
Immobilizer control unit-receiver	8	7	In steering column cover		
Power telescopic motor/position sensor	13	8	In steering column cover		
Power tilt/telescopic steering control unit connector A	4	16	In steering column cover		
Power tilt/telescopic steering control unit connector B	3	8	In steering column cover		
Power tilt/telescopic steering switch	1	13	In steering column cover		
Power tilt motor/position sensor	12	6	In steering column cover		
Steering angle sensor	2	5	In steering column cover		
Wiper/washer switch connector A	6	8	In steering column cover		
C519 (Junction connector)	14	12	In steering column cover		
C520 (Junction connector)	7	12	In steering column cover		

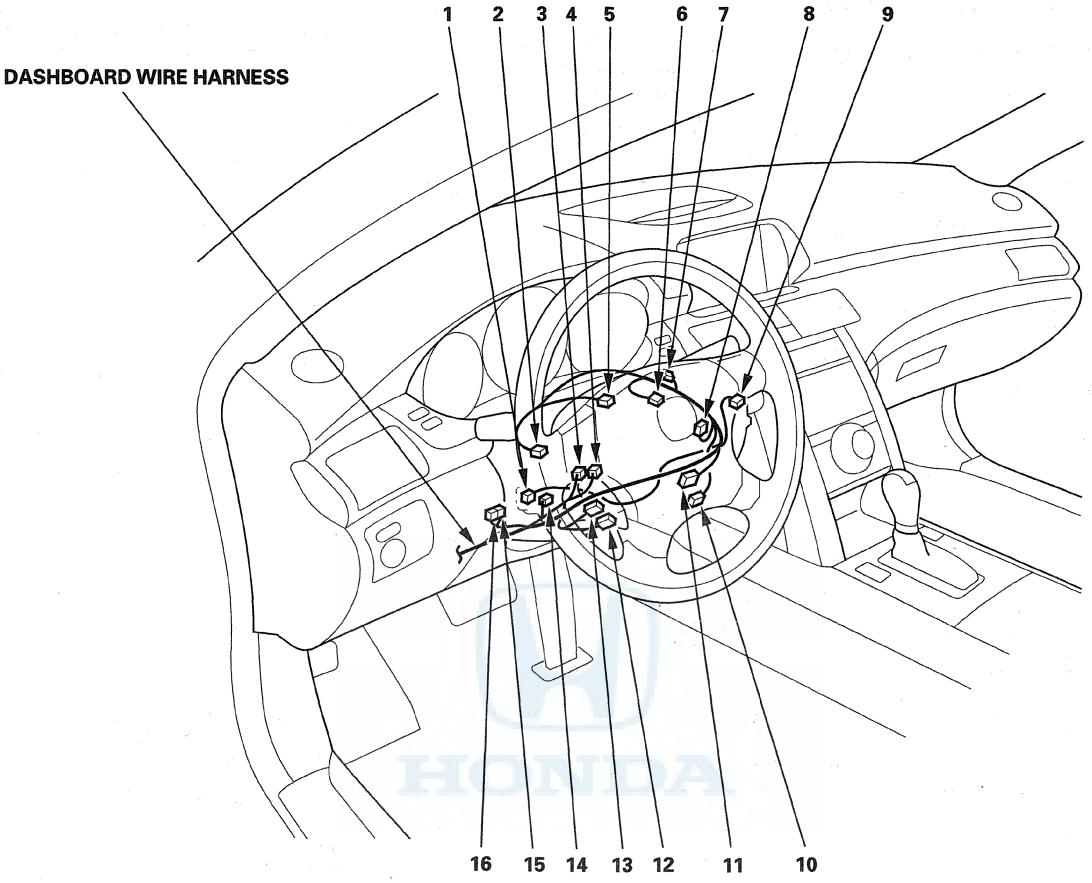
DASHBOARD WIRE HARNESS
1
2
3
4
5
6
7
8
9
16
15
14
13
12
11
10

Connector to Harness Index (cont'd)

Dashboard Wire Harness (Center branch)

Connector or Terminal	Ref	Cavities	Location	Connects to	Notes
A/T shift lock solenoid	21	2	Under console panel		
Audio-HVAC subdisplay unit	3	10	Middle of dash		
Audio unit connector A	32	20	Middle of dash		
Audio unit connector B	30	32	Middle of dash		
Audio unit connector C	31	14	Middle of dash		
Audio unit connector (for auxiliary jack)	13	6	Middle of dash		
Automatic lighting/sunlight sensor	5	5	Middle of dash		
Auxiliary jack	23	5	Console panel		
Climate control unit	11	40	Middle of dash		
Coin pocket light	27	2	Under middle of dash		
Front center speaker	6	2	Middle of dash		
Front interior LF antenna	17	2	Under middle of dash		
Imoes unit	16	5	Under middle of dash		
Interface dial	15	5	Under middle of dash		
Navigation display unit	2	20	Middle of dash		
Park pin switch/A/T gear position indicator panel light	20	8	Under console panel		
RF unit 1	4	6	Middle of dash		
SRS unit connector A	18	28	Under middle of dash		
USB adapter unit connector A	10	14	Middle of dash		
Yaw rate-lateral/Longitudinal acceleration sensor	19	5	Under console panel		
C521 (Junction connector)	29	12	Under middle of dash		
C522 (Junction connector)	28	12	Under middle of dash		
C523 (Junction connector)	26	12	Under console panel		
C524 (Junction connector)	7	12	Middle of dash		
C525 (Junction connector)	8	12	Middle of dash		
C526 (Junction connector)	9	12	Middle of dash		
C527 (Junction connector)	14	12	Under middle of dash		
C528	22	6	Under console panel	Front accessory power socket subharness (see page 22-62)	
C551	24	23	Under console panel	Console subharness (see page 22-62)	
G503	1		Middle of dash	Body ground, via dashboard wire harness	
G504	12		Middle of dash	Body ground, via dashboard wire harness	
G505	25		Under console panel	Body ground, via dashboard wire harness	

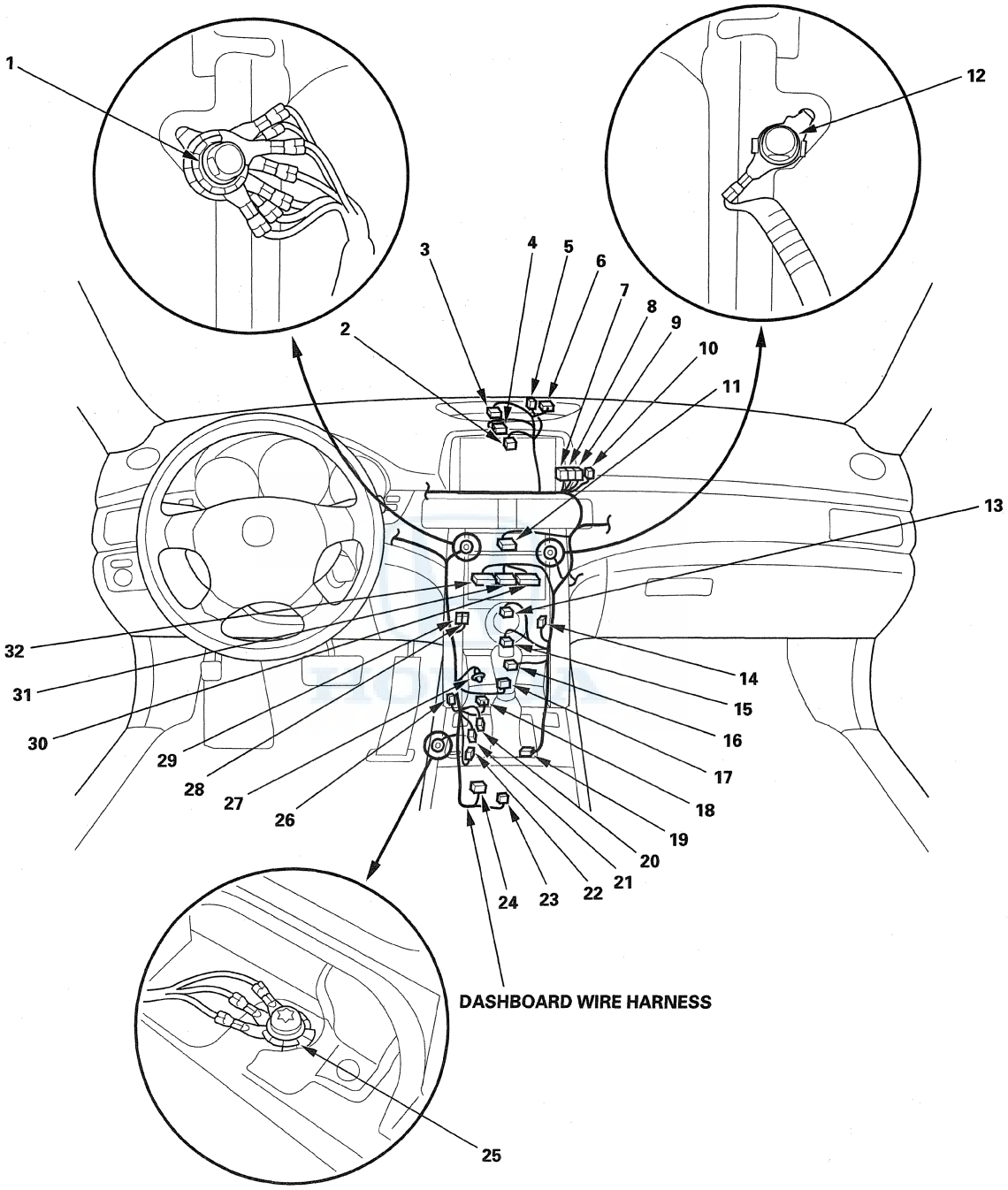
1
12
3
4
5
6
7
8
9
10
11
2
13
32
31
30
29
28
27
26
14
15
16
17
18
19
20
21
22
24
23
DASHBOARD WIRE HARNESS
25

Connector to Harness Index (cont'd)

Dashboard Wire Harness (Right branch)

Connector or Terminal	Ref	Cavities	Location	Connects to	Notes
Front passenger's airbag first and second inflator	3	4	Under right side of dash		
Front passenger's footwell light	16	2	Under right side of dash		
Front passenger's vent air temperature sensor	4	2	Under right side of dash		
Glove box light	17	2	Under right side of dash		
Passenger's under-dash fuse/relay box connector D (see page 22-76)	9	17	Right kick panel		
Passenger's under-dash fuse/relay box connector E (see page 22-76)	8	14	Right kick panel		
Passenger's under-dash fuse/relay box connector H (see page 22-76)	7	3	Right kick panel		
PCM connector D	20	17	Under middle of dash		
PCM connector E	19	31	Under middle of dash		
Rear seat heater relay	5	4	Under right side of dash	Passenger's auxiliary under-dash relay box (see page 22-77)	Canada models
Trunk lid opener main switch	2	2	Under right side of dash		
C201	6	13	Right side of dash	Engine compartment wire harness (see page 22-30)	
C501	18	17	Under middle of dash	PCM wire harness (see page 22-24)	
C502	15	12	Under right side of dash	A/C wire harness (see page 22-70)	
C503	14	2	Under right side of dash	A/C wire harness (see page 22-70)	
C529 (Junction connector)	12	12	Under right side of dash		
C651	10	34	Under right side of dash	Right side wire harness (see page 22-44)	
C652	11	8	Under right side of dash	Right side wire harness (see page 22-44)	
C771	13	20	Under right side of dash	Front passenger's door subharness (see page 22-58)	
G506	1		Right side of dash	Body ground, via dashboard wire harness	

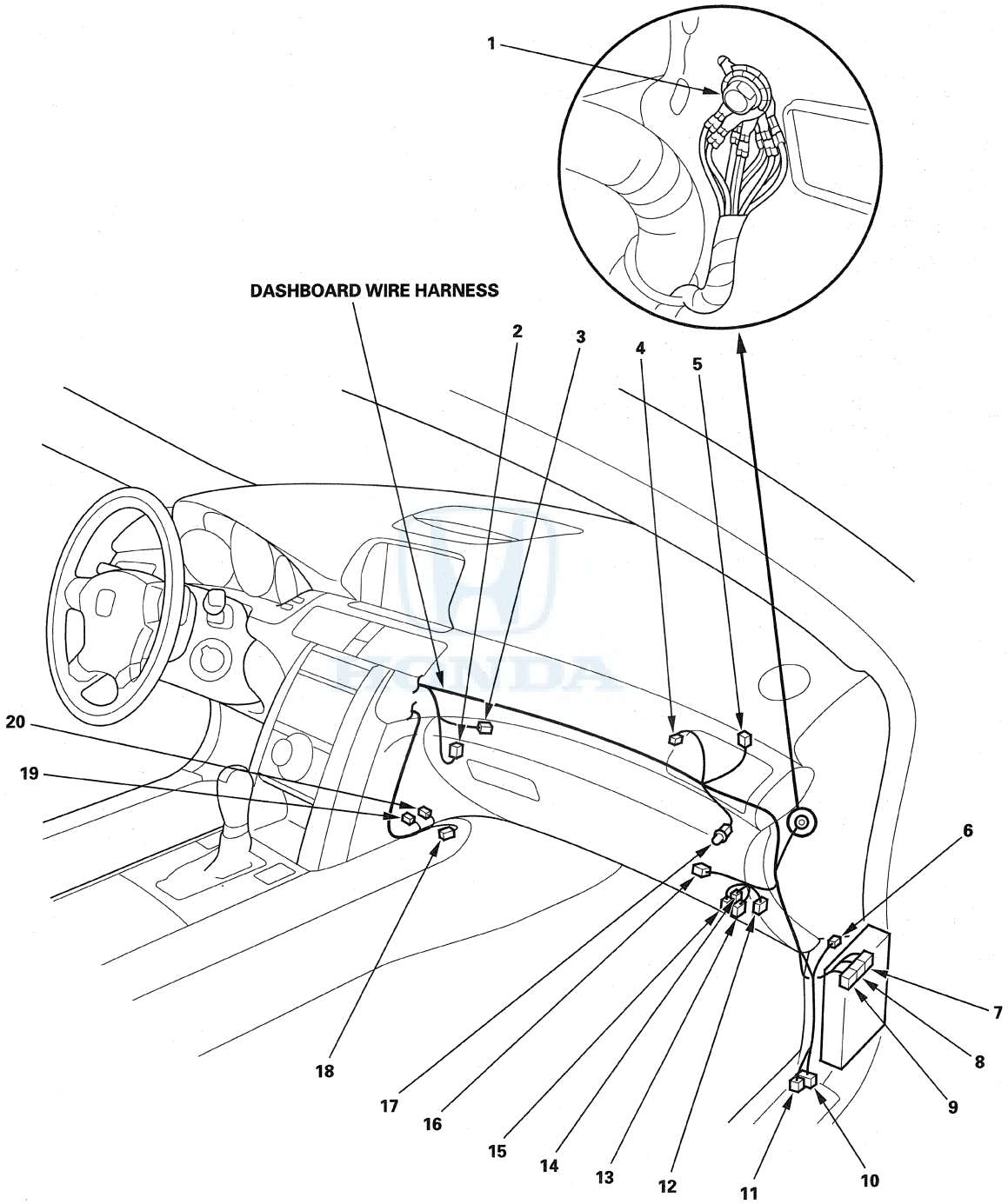
1
DASHBOARD WIRE HARNESS
2
3
4
5
20
19
6
7
8
9
18
17
16
15
14
13
12
11
10

Connector to Harness Index (cont'd)

Left Side Wire Harness (Front branch)

Connector or Terminal	Ref	Cavities	Location	Connects to	Notes
Driver's e-pretensioner	22	2	Left B-pillar		* 1
Driver's seat belt tensioner	23	4	Left B-pillar		
Driver's seat belt tension reducer solenoid	24	2	Left B-pillar		
Driver's seat ventilation switch	15	14	Under console panel		* 2
Driver's seat heater switch	15	6	Under console panel		* 3
Driver's side airbag inflator	20	2	Under driver's seat		
Driver's under-dash fuse/relay box connector E (see page 22-75)	4	16	Left kick panel		
Driver's under-dash fuse/relay box connector F (see page 22-75)	2	14	Left kick panel		
Driver's under-dash fuse/relay box connector G (see page 22-75)	6	6	Left kick panel		
Driver's under-dash fuse/relay box connector H (see page 22-75)	5	14	Left kick panel		
Driver's under-dash fuse/relay box connector J (see page 22-75)	1	21	Left kick panel		
Driver's under-dash fuse/relay box connector Q (see page 22-75)	33	14	Left kick panel		
Driver's under-dash fuse/relay box connector W (see page 22-75)	3	5	Left kick panel		
Keyless access control unit connector B	11	24	Under left side of dash		
Left side impact sensor (1st)	26	2	Left B-pillar		
Parking brake switch	16	1	Under left side of dash		
C304	7	5	Under left side of dash	Engine compartment wire harness (see page 22-28)	
C601	31	23	Under left side of dash	Dashboard wire harness (see page 22-32)	
C602	32	34	Under left side of dash	Dashboard wire harness (see page 22-32)	
C603	13	6	Under middle of dash	Right side wire harness (see page 22-44)	* 1
C604	14	16	Under middle of dash	Right side wire harness (see page 22-44)	
C607 (Junction connector)	28	12	Under left side of dash		
C608 (Junction connector)	29	12	Under left side of dash		
C609 (Junction connector)	30	12	Under left side of dash		
C610 (Junction connector)	25	12	Under driver's seat		
C631	9	24	Under left side of dash	Roof wire harness (see page 22-48)	
C632	8	8	Under left side of dash	Roof wire harness (see page 22-48)	
C751	10	14	Under left side of dash	Driver's door subharness (see page 22-56)	
C781	21	17	Left B-pillar	Left rear door wire harness (see page 22-60)	
C901	18	23	Under driver's seat	Driver's seat wire harness (see page 22-64)	
C902	19	6	Under driver's seat	Driver's seat wire harness (see page 22-64)	* 2
C903	17	2	Under driver's seat	Driver's seat wire harness (see page 22-64)	
C991	12	12	Under middle of dash	E-pretensioner subharness (see page 22-72)	* 1
G601	27		Under driver's seat	Body ground, via left side wire harness	

* 1: With e-pretensioner
* 2: With seat ventilation
* 3: Without seat ventilation

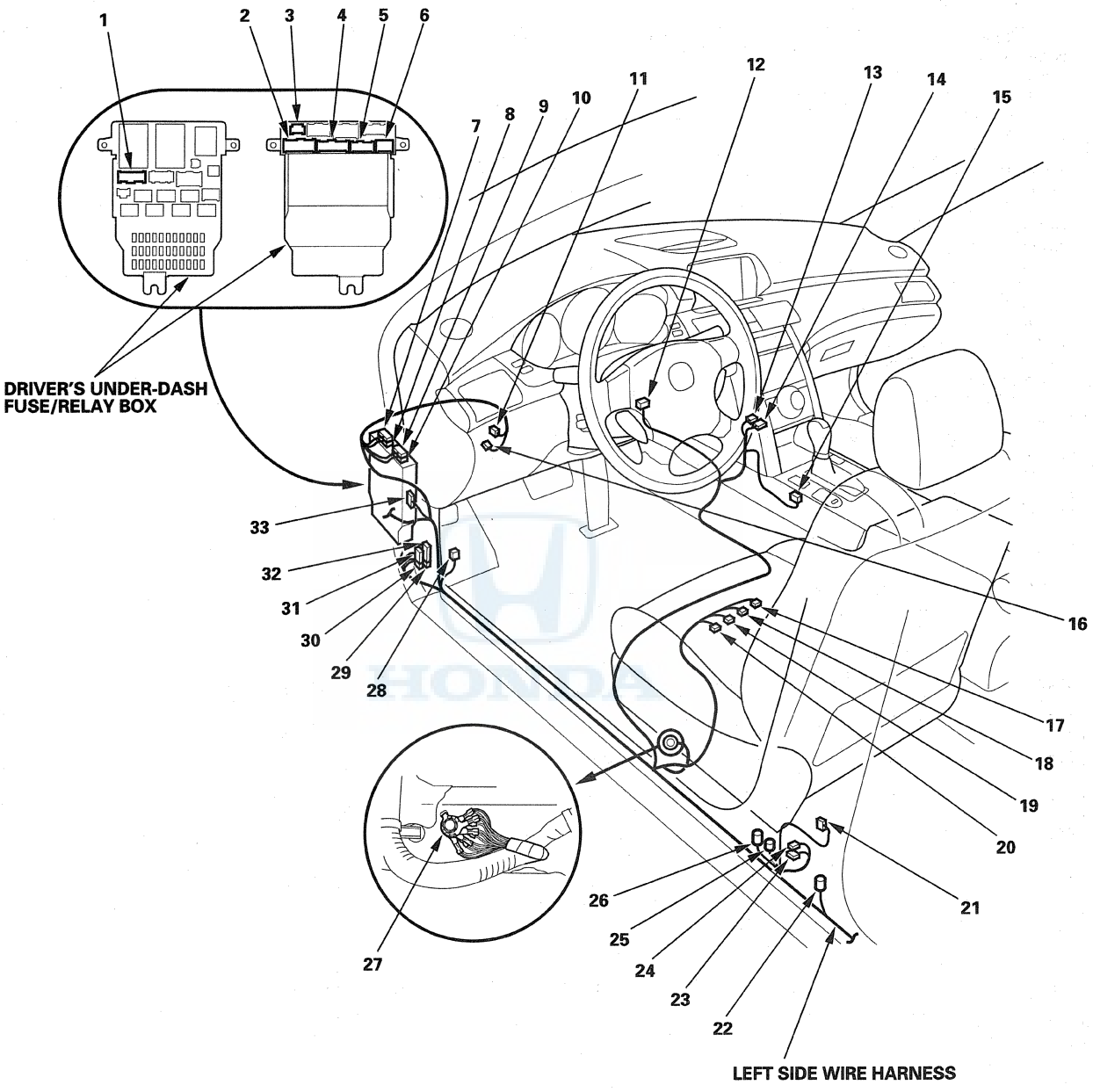
1
2
3
4
5
6
7
8
9
10
11
12
13
14
15
16
17
18
19
20
21
22
23
24
25
26
27
28
29
30
31
32
33
DRIVER'S UNDER-DASH FUSE/RELAY BOX
LEFT SIDE WIRE HARNESS

Connector to Harness Index (cont'd)

Left Side Wire Harness (Rear branch)

Connector or Terminal	Ref	Cavities	Location	Connects to	Notes
AcuraLink control unit (XM receiver) connector	8	32	Left side of trunk		* 1
AcuraLink connector (Male connector)	10	5	Left side of trunk		* 1
AcuraLink connector (Female connector)	9	5	Left side of trunk		* 1
Fuel fill door opener solenoid	7	2	Left side of trunk		
Fuel pump control module	17	10	Under left side of floor		
Fuel pump/fuel gauge sending unit	23	5	Under left side of floor		
Left rear TPMS initiator	20	3	Left side of floor		
Left rear wheel speed sensor	18	2	Under left side of floor		
Left side curtain airbag inflator	27	2	Left C-pillar		
Left side impact sensor (2nd)	21	2	Left C-pillar		
Navigation service check connector	1	2	Left side of rear shelf		
Navigation unit connector A	2	8	Left side of rear shelf		
Navigation unit connector B	3	32	Left side of rear shelf		
Navigation unit connector C	6	16	Left side of rear shelf		
Navigation unit connector D	5	5	Left side of rear shelf		
Navigation unit connector E (for rearview camera)	4	7	Left side of rear shelf		
Noise reduction condenser	14	2	Left side of rear shelf		
Rear window defogger connector A (+)	31	1	Left C-pillar		
Rear safing sensor	28	2	Under rear seat		
Secondary fuel gauge sending unit	32	5	Under rear seat		
Suspension stroke sensor	16	3	Under left side of floor		
XM receiver	8	14	Left side of trunk		* 2
C606	15	24	Left C-pillar	Rear shelf wire harness (see page 22-50)	
C612 (Junction connector)	25	12	Left C-pillar		
C613 (Junction connector)	26	12	Left C-pillar		
C614 (Junction connector)	13	12	Left side of rear shelf		
C615 (Junction connector)	12	12	Left side of rear shelf		
C616 (Junction connector)	34	12	Left side of rear shelf		
C653	33	23	Under rear floor	Right side wire harness (see page 22-46)	
C654	29	24	Under rear floor	Right side wire harness (see page 22-46)	
C655	30	16	Under rear floor	Right side wire harness (see page 22-46)	
C701	11	20	Left side of trunk	Rear wire harness (see page 22-50)	
C951	24	8	Under rear seat	Rear headrest subharness (see page 22-68)	* 3
C951	24	3	Under rear seat	Rear headrest subharness (see page 22-68)	* 4
G602	22		Left C-pillar	Body ground, via left side wire harness	
G603	19		Left C-pillar	Body ground, via left side wire harness	
G604	35		Left side of trunk	Body ground, via left side wire harness	

* 1: With AcuraLink
* 2: With XM radio without AcuraLink
* 3: With rear seat heater
* 4: Without rear seat heater

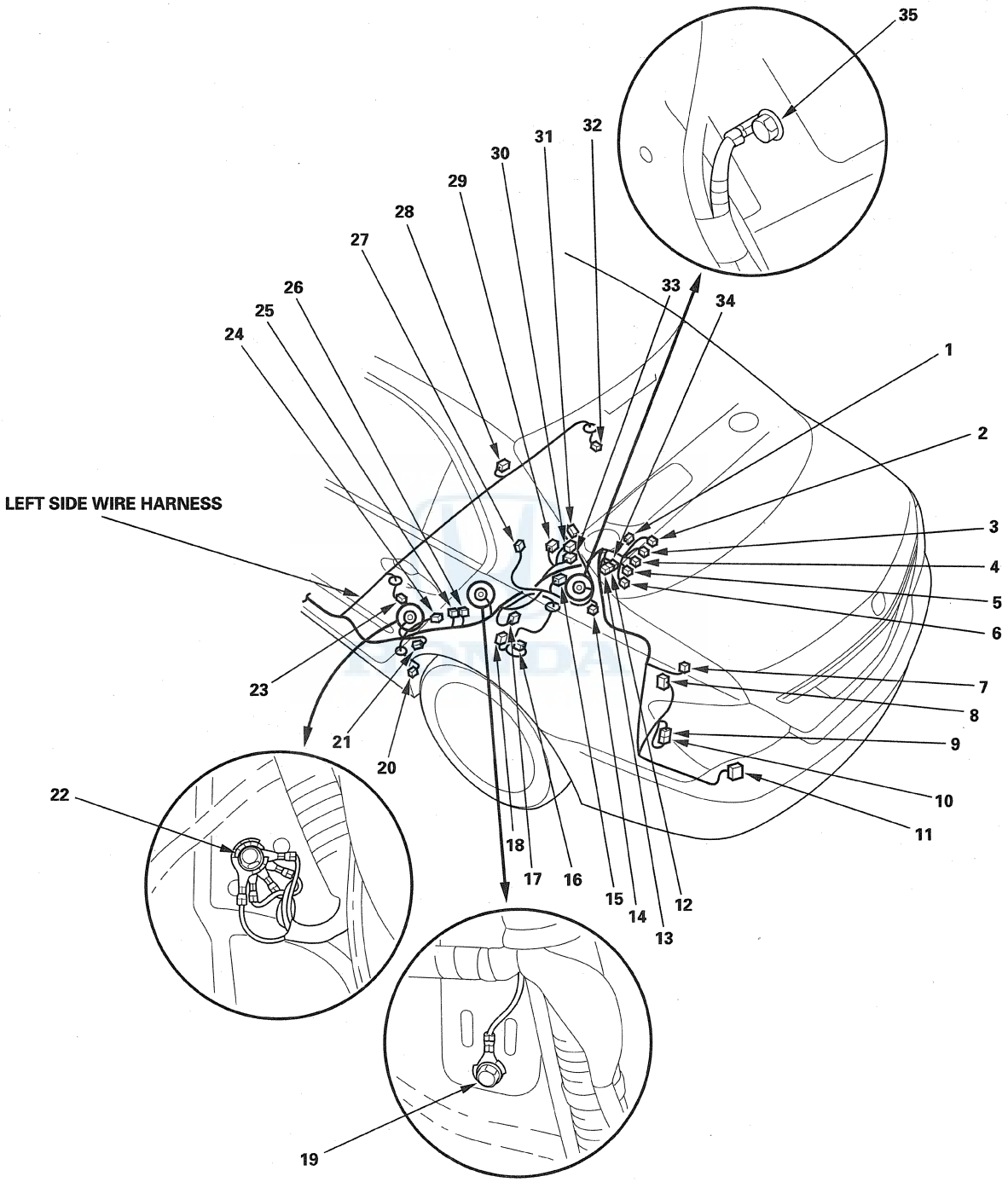
LEFT SIDE WIRE HARNESS
1
2
3
4
5
6
7
8
9
10
11
12
13
14
15
16
17
18
19
20
21
22
23
24
25
26
27
28
29
30
31
32
33
34
35

Connector to Harness Index (cont'd)

Right Side Wire Harness (Front branch)

Connector or Terminal	Ref	Cavities	Location	Connects to	Notes
Front passenger's e-pretensioner	15	2	Right B-pillar		* 1
Front passenger's seat belt tensioner	16	4	Right B-pillar		
Front passenger's seat belt tension reducer solenoid	17	2	Right B-pillar		
Front passenger's seat ventilation switch	22	14	Under console panel		* 2
Front passenger's seat heater switch	22	6	Under console panel		* 3
Front passenger's side airbag inflator	19	2	Under front passenger's seat		
HandsFreeLink control unit	5	28	Under right side of dash		
Passenger's under-dash fuse/relay box connector C (see page 22-76)	1	5	Right kick panel		
Passenger's under-dash fuse/relay box connector F (see page 22-76)	3	8	Right kick panel		
Passenger's under-dash fuse/relay box connector G (see page 22-76)	2	14	Right kick panel		
Right side impact sensor (1st)	12	2	Right B-pillar		
SRS unit connector B	24	28	Under middle of dash		
SRS unit connector C	23	28	Under middle of dash		
C603	26	6	Under middle of dash	Left side wire harness (see page 22-40)	* 1
C604	25	16	Under middle of dash	Left side wire harness (see page 22-40)	
C651	8	34	Under right side of dash	Dashboard wire harness (see page 22-38)	
C652	9	8	Under right side of dash	Dashboard wire harness (see page 22-38)	
C660 (Junction connector)	13	12	Under right side of dash		
C661 (Junction connector)	14	12	Under right side of dash		
C772	4	6	Under right side of dash	Front passenger's door subharness (see page 22-58)	
C791	18	17	Right B-pillar	Right rear door wire harness (see page 22-61)	
C931	21	23	Under front passenger's seat	Front passenger's seat harness (see page 22-66)	
C932	20	4	Under front passenger's seat	Front passenger's seat wire harness (see page 22-66)	
C992	7	5	Behind right kick panel	E-pretensioner subharness (see page 22-72)	* 1
C993	6	2	Behind right kick panel	E-pretensioner subharness (see page 22-72)	* 1
G651	11		Under front passenger's seat	Body ground, via right side wire harness	
G653	10		Right kick panel	Body ground, via right side wire harness	* 1

* 1: With e-pretensioner
* 2: With seat ventilation
* 3: Without seat ventilation

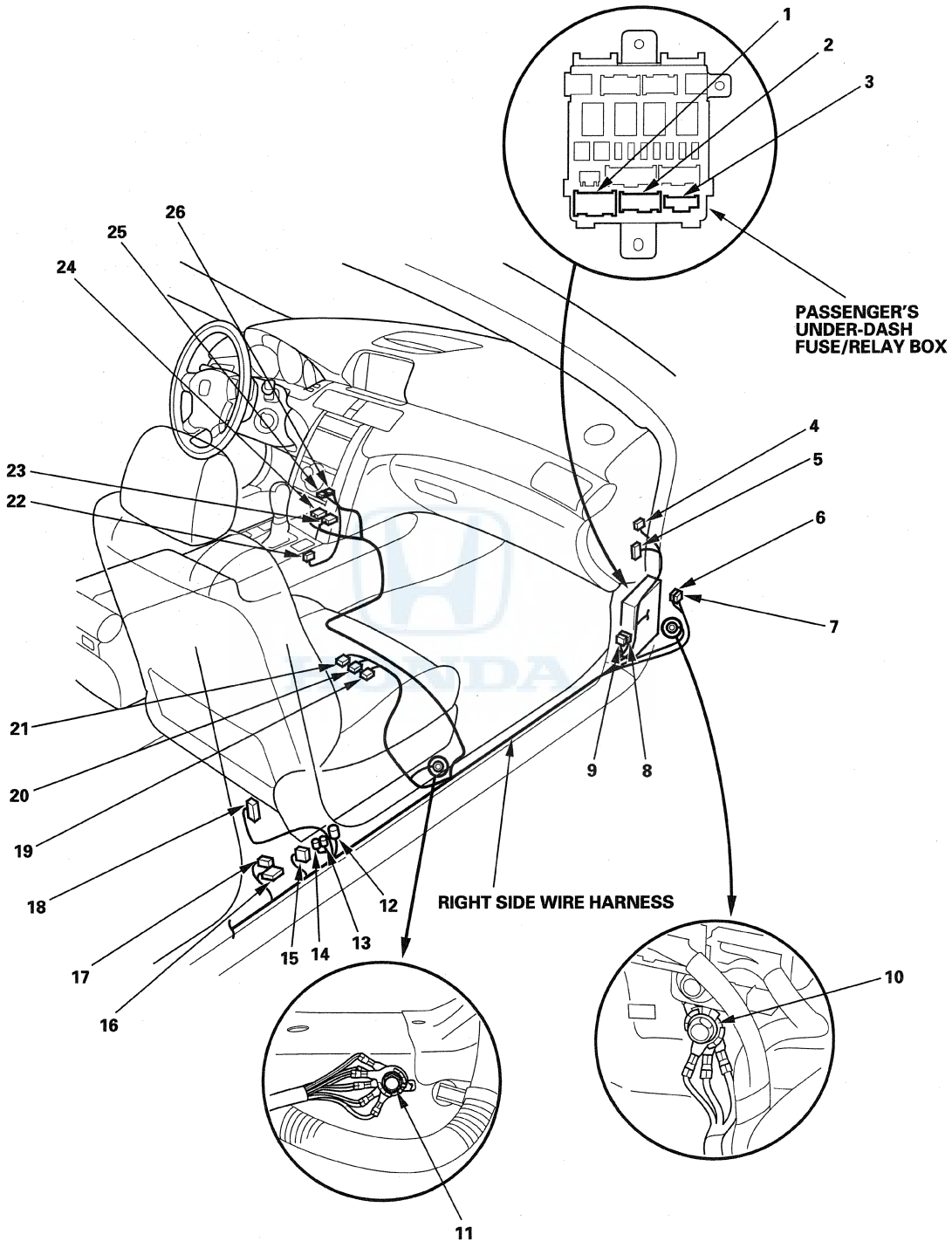
1
2
3
PASSENGER'S
UNDER-DASH
FUSE/RELAY BOX
26
25
24
23
22
4
5
6
7
21
20
19
18
17
16
15
14
13
12
9
8
RIGHT SIDE WIRE HARNESS
10
11

Connector to Harness Index (cont'd)

Right Side Wire Harness (Rear branch)

Connector or Terminal	Ref	Cavities	Location	Connects to	Notes
Active noise cancellation unit	8	16	Right side of trunk		
Right rear TPMS initiator	3	3	Right side of floor		
Right side curtain airbag	15	2	Right C-pillar		
Right side impact sensor (2nd)	2	2	Right C-pillar		
Stereo amplifier connector A	9	26	Right side of trunk		
Stereo amplifier connector B	11	14	Right side of trunk		
Stereo amplifier connector C	10	23	Right side of trunk		
C633	13	6	Right C-pillar	Active noise cancellation subharness (see page 22-48)	
C653	17	23	Under rear floor	Left side wire harness (see page 22-42)	
C654	16	24	Under rear floor	Left side wire harness (see page 22-42)	
C655	18	16	Under rear floor	Left side wire harness (see page 22-42)	
C656	14	20	Right C-pillar	Rear shelf wire harness (see page 22-50)	
C657	12	20	Right side of trunk	Trunk subharness (see page 22-52)	* 1
C657	12	6	Right side of trunk	Trunk subharness (see page 22-52)	* 2
C658	6	14	Right C-pillar	Floor subharness (see page 22-52)	
C659	7	6	Right C-pillar	Floor subharness (see page 22-52)	
C662 (Junction connector)	4	12	Right C-pillar		
C663 (Junction connector)	5	12	Right C-pillar		
G652	1		Right C-pillar	Body ground, via right side wire harness	

* 1: With rearview camera
* 2: Without rearview camera

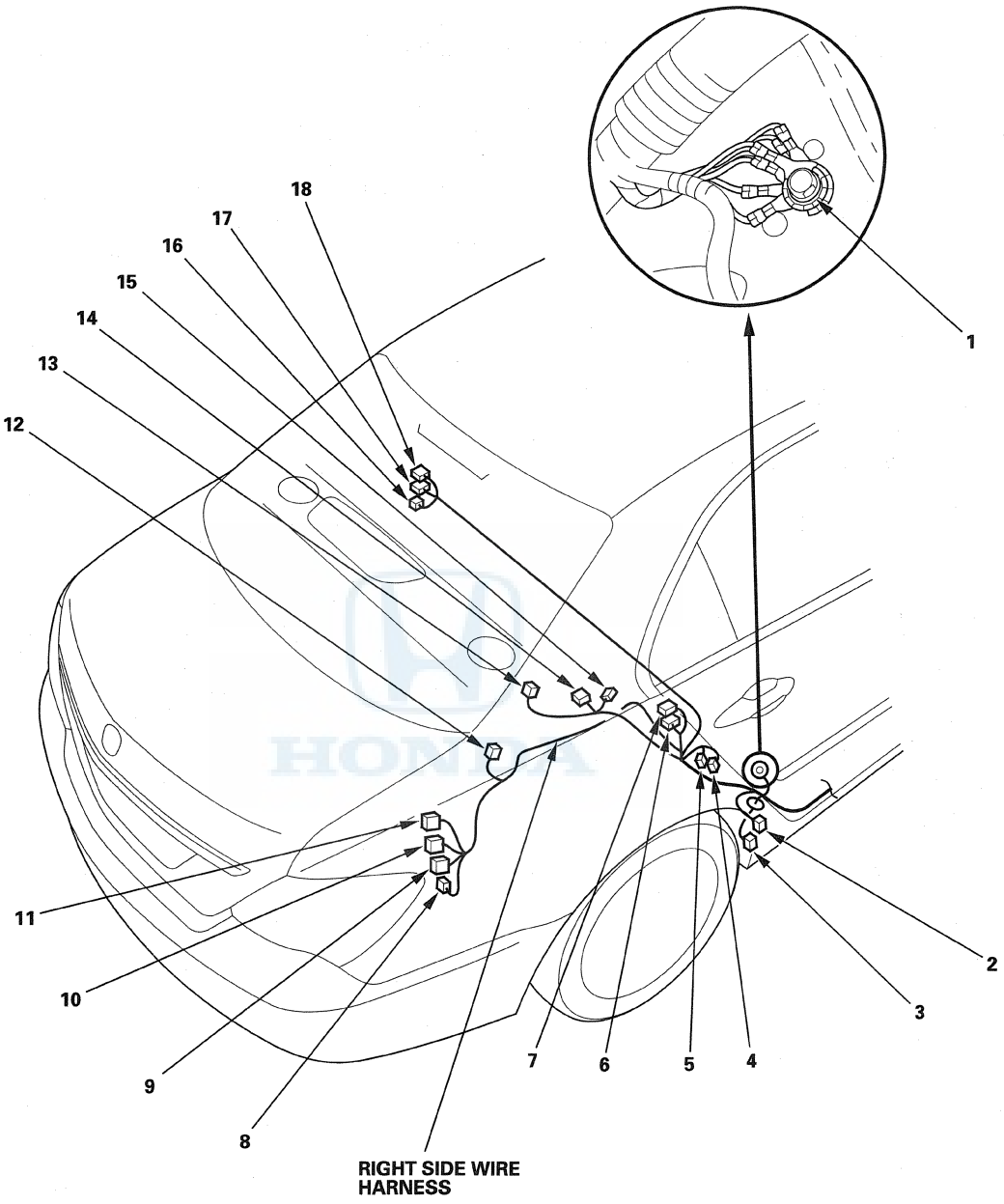
18
17
16
15
14
13
12
1
11
10
9
8
7
6
5
4
3
2
RIGHT SIDE WIRE HARNESS

Connector to Harness Index (cont'd)

Roof Wire Harness

Connector or Terminal	Ref	Cavities	Location	Connects to	Notes
Automatic dimming inside mirror	3	6	Roof		
Driver's vanity mirror light	13	2	Driver's sunvisor		
High mount brake light	9	3	Roof		
Passenger's vanity mirror light	1	2	Front passenger's sunvisor		
Rear individual map light	10	10	Roof		
Roof console	2	28	Roof		
C631	15	24	Under left side of dash	Left side wire harness (see page 22-40)	
C632	16	8	Under left side of dash	Left side wire harness (see page 22-40)	
C851	11	8	Roof	Moonroof subharness	
C852 (Junction connector)	14	12	Roof		

Moonroof Subharness

Connector or Terminal	Ref	Cavities	Location	Connects to	Notes
Moonroof motor/control unit	12	10	Roof		
C851	11	8	Roof	Roof wire harness	

Active Noise Cancellation Subharness

Connector or Terminal	Ref	Cavities	Location	Connects to	Notes
Active noise cancellation front microphone connector A	4	2	Roof		
Active noise cancellation front microphone connector B	5	3	Roof		
Active noise cancellation rear microphone connector A	6	2	Roof		
Active noise cancellation rear microphone connector B	7	3	Roof		
C633	8	6	Right C-pillar	Right side wire harness (see page 22-46)	

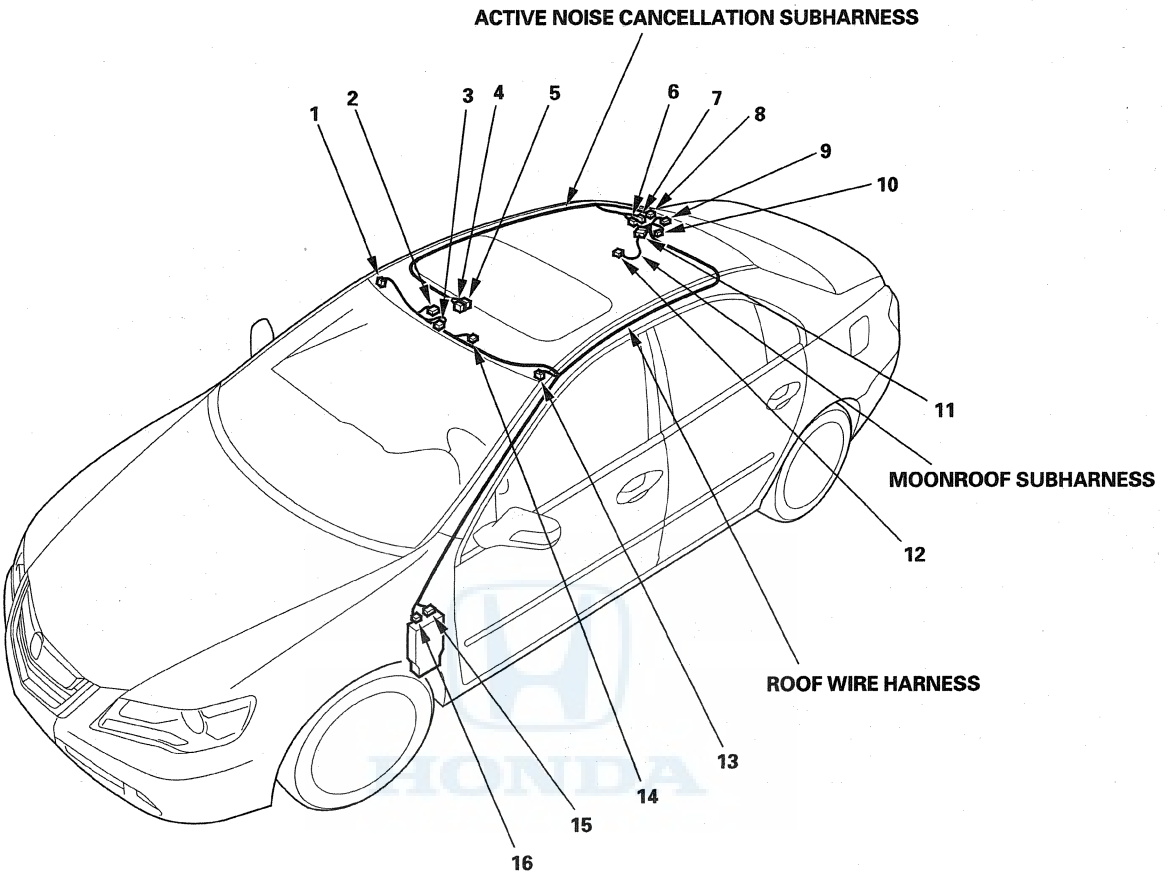
ACTIVE NOISE CANCELLATION SUBHARNESS
1
2
3
4
5
6
7
8
9
10
11
MOONROOF SUBHARNESS
12
ROOF WIRE HARNESS
13
14
15
16

Connector to Harness Index (cont'd)

Rear Shelf Wire Harness

Connector or Terminal	Ref	Cavities	Location	Connects to	Notes
Left rear Twiddler® speaker	2	2	Left side of rear shelf		
Power rear window sunshade control unit	11	5	Middle of rear shelf		
Rear shelf LF antenna	14	2	Middle of rear shelf		
RF unit 2	10	6	Middle of rear shelf		
Right rear Twiddler® speaker	7	2	Right side of rear shelf		
Subwoofer	3	2	Middle of rear shelf		
TPMS control unit connector A	9	20	Right side of rear shelf		
TPMS control unit connector B	8	14	Right side of rear shelf		
Trunk light B	13	2	Middle of rear shelf		
C606	1	24	Left C-pillar	Left side wire harness (see page 22-42)	
C656	4	20	Right C-pillar	Right side wire harness (see page 22-46)	

Rear Wire Harness

Connector or Terminal	Ref	Cavities	Location	Connects to	Notes
Keyless buzzer	17	2	Middle of trunk		
Left taillight/brake light	18	5	Left side of trunk		
Rear bumper LF antenna	15	2	Middle of trunk		
Right taillight/brake light	12	5	Right side of trunk		
Trunk lid latch switch/opener solenoid	16	5	Middle of trunk		
C701	19	20	Left side of trunk	Left side wire harness (see page 22-42)	
G701	20		Left side of trunk	Body ground, via rear wire harness	

Rear Window Defogger Ground Wire

Connector or Terminal	Ref	Cavities	Location	Connects to	Notes
Rear window defogger connector B	6	1	Right C-pillar		
G851	5		Right C-pillar	Body ground, via rear window defogger ground wire	

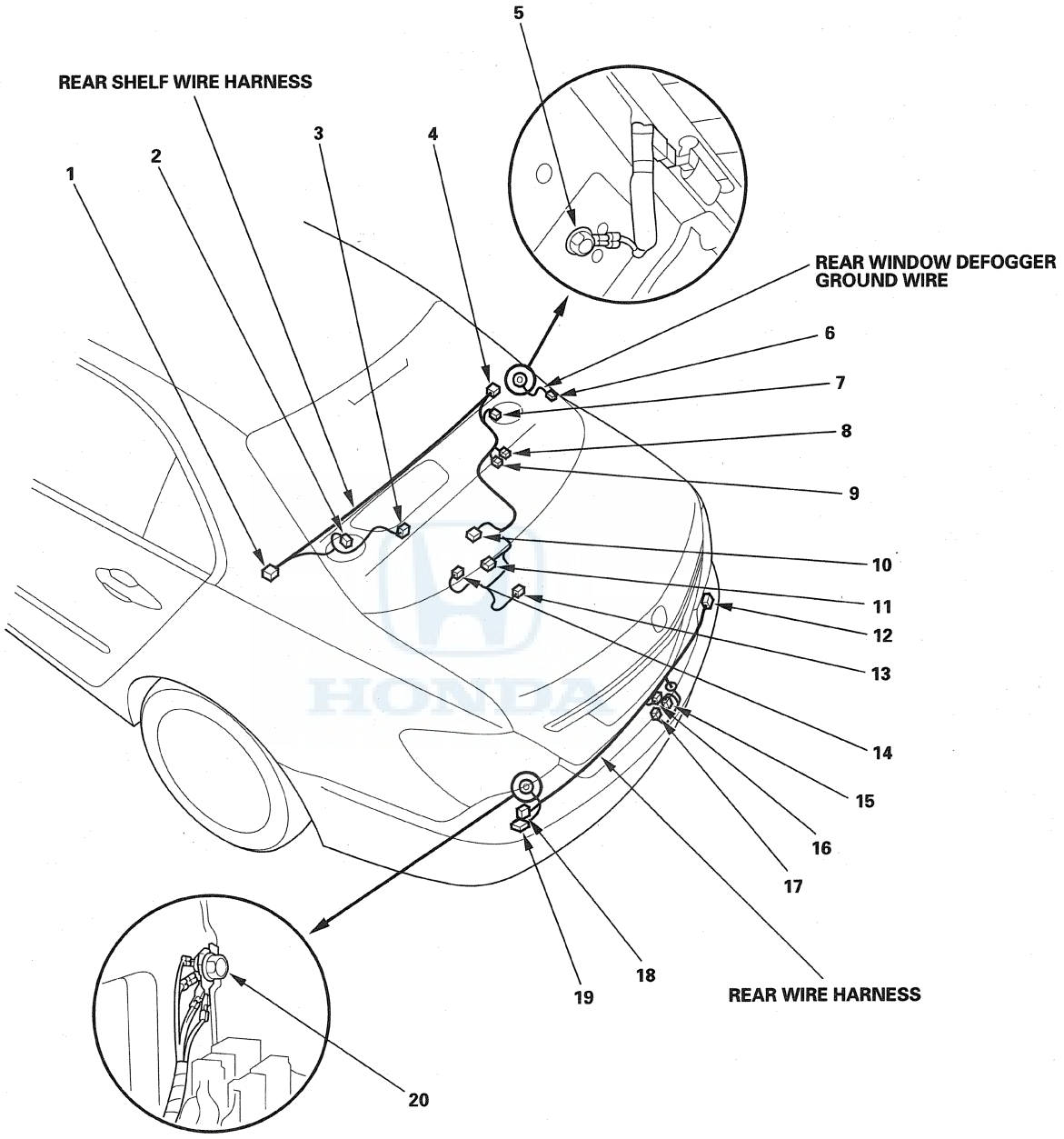
REAR SHELF WIRE HARNESS
1
2
3
4
5
REAR WINDOW DEFOGGER GROUND WIRE
6
7
8
9
10
11
12
13
14
15
16
17
18
19
REAR WIRE HARNESS
20

Connector to Harness Index (cont'd)

Trunk Wire Harness

Connector or Terminal	Ref	Cavities	Location	Connects to	Notes
Left back-up light	19	3	Left side of trunk		
Left license plate light	18	2	Left side of trunk		
Rearview camera	16	6	Middle of trunk		* 1
Right back-up light	13	3	Right side of trunk		
Right license plate light	15	2	Right side of trunk		
Trunk lid outer handle switch	17	3	Middle of trunk		
Trunk light A	20	2	Left side of trunk		
C831	14	12	Middle of trunk	Trunk subharness	* 2
C831	14	20	Middle of trunk	Trunk subharness	* 1
C833 (Junction connector)	12	12	Middle of trunk		

* 1: With rearview camera
* 2: Without rearview camera

Trunk Subharness

Connector or Terminal	Ref	Cavities	Location	Connects to	Notes
C657	9	20	Right side of trunk	Right side wire harness (see page 22-46)	* 1
C657	9	6	Right side of trunk	Right side wire harness (see page 22-46)	* 2
C831	14	12	Middle of trunk	Trunk wire harness	* 2
C831	14	20	Middle of trunk	Trunk wire harness	* 1

* 1: With rearview camera
* 2: Without rearview camera

Floor Subharness

Connector or Terminal	Ref	Cavities	Location	Connects to	Notes
EVAP canister vent shut valve	1	2	Under rear floor		
Fuel tank pressure (FTP) sensor	2	3	Under rear floor		
Right rear wheel speed sensor	8	2	Under right side of vehicle		
SH-AWD control unit connector A	4	26	Under right side of rear seat		
SH-AWD control unit connector B	5	8	Under right side of rear seat		
SH-AWD relay	3	4	Under right side of rear seat		
C658	7	14	Right C-pillar	Right side wire harness (see page 22-46)	
C659	6	6	Right C-pillar	Right side wire harness (see page 22-46)	
C698	11	10	Under rear floor	Rear differential subharness A (see page 22-54)	
C699	10	6	Under rear floor	Rear differential subharness B (see page 22-54)	

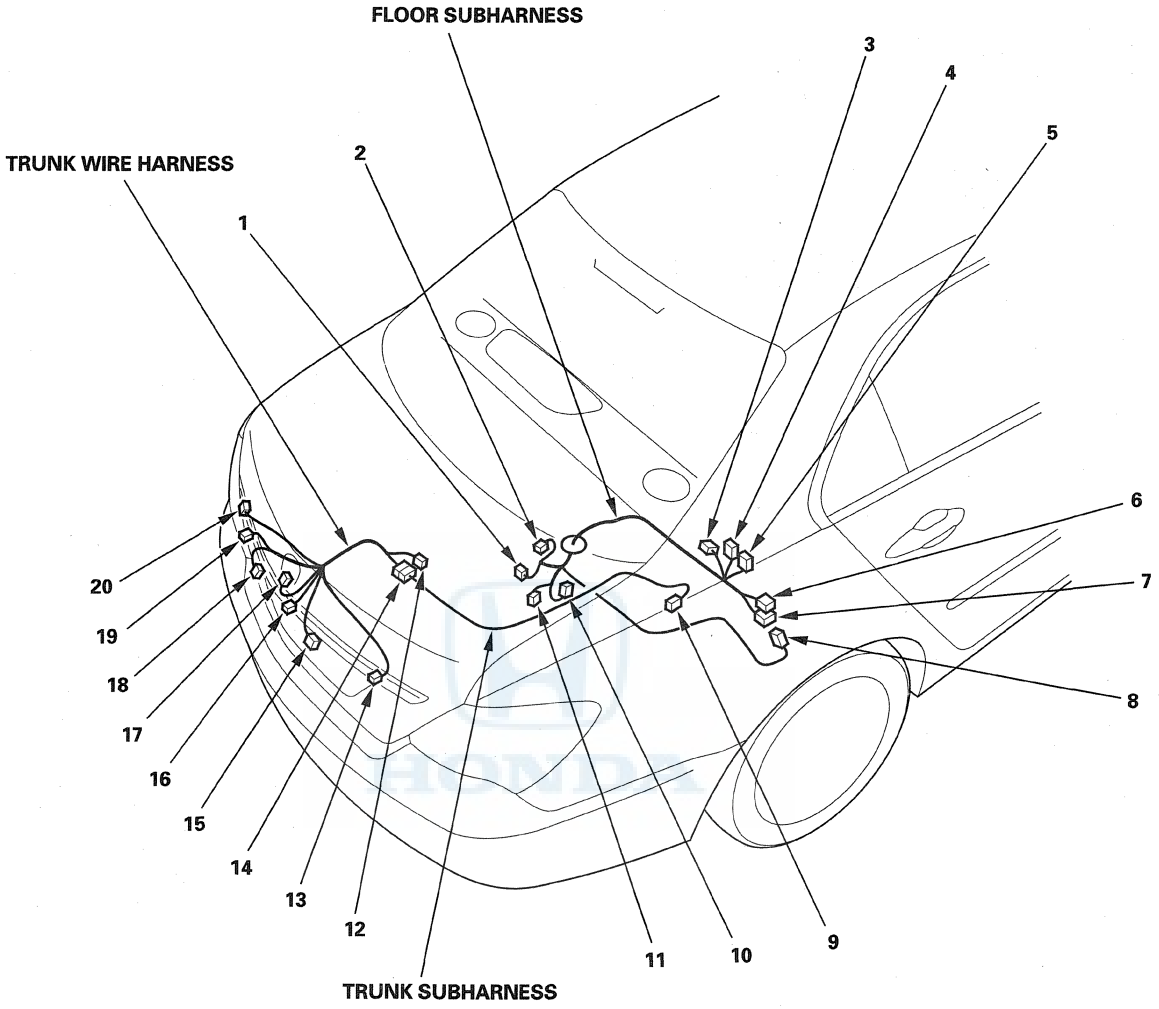
FLOOR SUBHARNESS
TRUNK WIRE HARNESS
TRUNK SUBHARNESS
1
2
3
4
5
6
7
8
9
10
11
12
13
14
15
16
17
18
19
20

Connector to Harness Index (cont'd)

Rear Differential Subharness A

Connector or Terminal	Ref	Cavities	Location	Connects to	Notes
Hypoid gear speed sensor	6	3	Rear differential		
Left clutch electromagnetic coil	8	2	Rear differential		
Left search coil	9	2	Rear differential		
Shift solenoid valve	10	2	Rear differential		
C698	5	10	Rear differential	Floor subharness (see page 22-52)	
T15	7		Rear differential	Rear differential	

Rear Differential Subharness B

Connector or Terminal	Ref	Cavities	Location	Connects to	Notes
Rear differential fluid temperature sensor	1	2	Rear differential		
Right clutch electromagnetic coil	4	2	Rear differential		
Right search coil	2	2	Rear differential		
C699	3	6	Rear differential	Floor subharness (see page 22-52)	

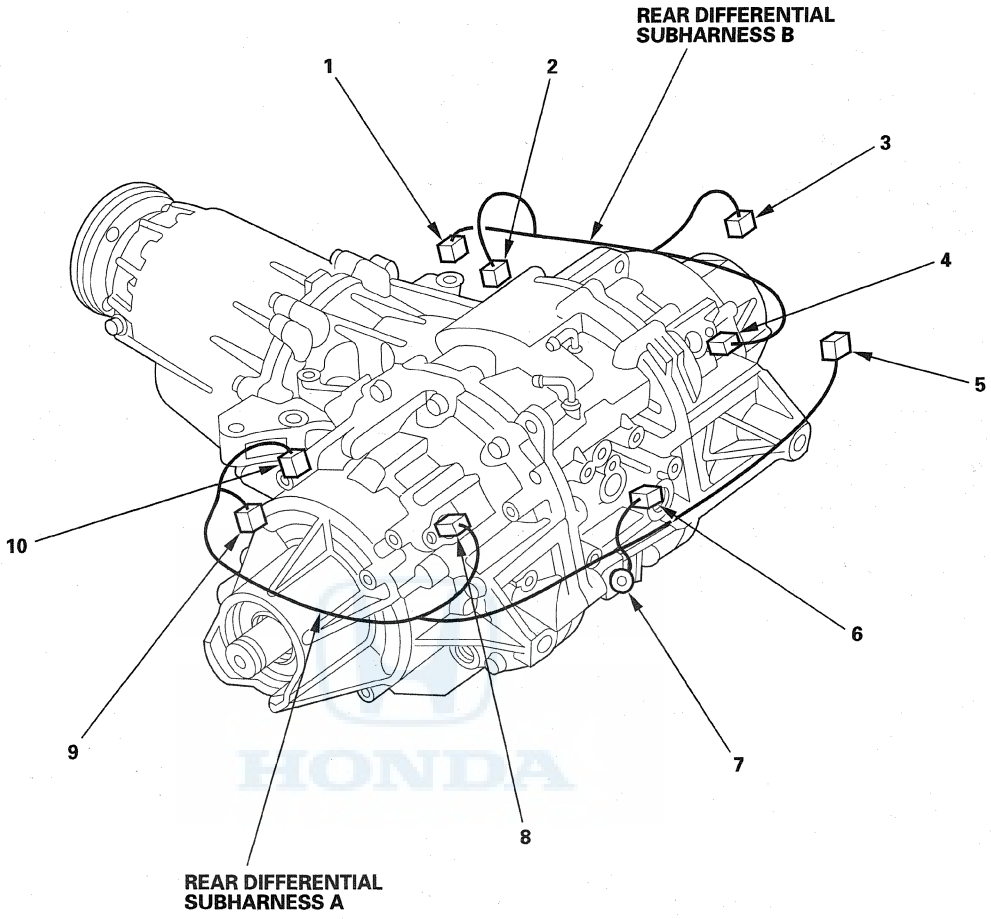
REAR DIFFERENTIAL SUBHARNESS B
1
2
3
4
5
6
7
8
9
10
REAR DIFFERENTIAL SUBHARNESS A

Connector to Harness Index (cont'd)

Driver's Door Wire Harness A

Connector or Terminal	Ref	Cavities	Location	Connects to	Notes
Driver's door courtesy light	21	2	Driver's door		
Driver's door inner handle light	2	2	Driver's door		
Driver's door lock switch	3	4	Driver's door		
Driver's door pocket light	19	2	Driver's door		
Driver's MPCS unit connector A	12	40	Driver's door		
Driver's MPCS unit connector B	16	14	Driver's door		
Driving position memory switch	4	10	Driver's door		
Left power mirror	5	16	Driver's door		
Power window master switch	20	6	Driver's door		
Trunk lid opener/fuel fill door opener switch	15	10	Driver's door		
C754	6	28	Driver's door	Driver's door wire harness B	
C755 (Junction connector)	16	12	Driver's door		
C756 (Junction connector)	17	12	Driver's door		

Driver's Door Wire Harness B

Connector or Terminal	Ref	Cavities	Location	Connects to	Notes
Driver's door lock actuator/knob switch/door switch connector A	24	10	Driver's door		
Driver's door lock actuator/knob switch/door switch connector B	22	2	Driver's door		
Driver's door LF antenna/outer handle light/touch sensor	1	8	Driver's door		
Driver's power window motor	14	6	Driver's door		
Driver's door speaker	13	2	Driver's door		
Tweeter (left)	7	2	Driver's door		
C752	8	20	Under left side of dash	Driver's door subharness	
C753	11	17	Under left side of dash	Driver's door subharness	
C754	6	28	Driver's door	Driver's door wire harness A	
C757 (Junction connector)	23	12	Driver's door		

Driver's Door Subharness

Connector or Terminal	Ref	Cavities	Location	Connects to	Notes
Driver's under-dash fuse/relay box connector K (see page 22-75)	10	12	Left kick panel		
C751	9	14	Under left side of dash	Left side wire harness (see page 22-40)	
C752	8	20	Under left side of dash	Driver's door wire harness B	
C753	11	17	Under left side of dash	Driver's door wire harness B	

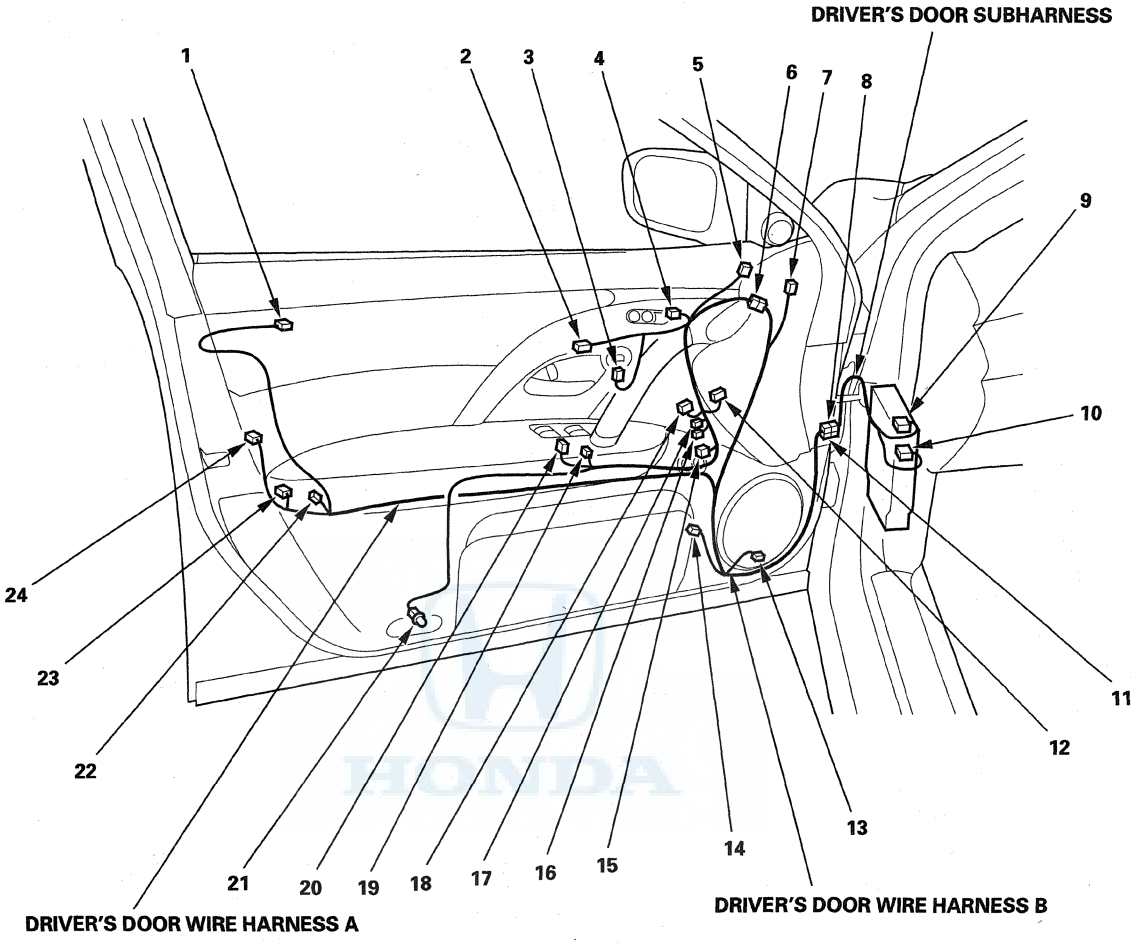
DRIVER'S DOOR SUBHARNESS
1
2
3
4
5
6
7
8
9
10
11
12
13
14
15
16
17
18
19
20
21
22
23
24
DRIVER'S DOOR WIRE HARNESS A
DRIVER'S DOOR WIRE HARNESS B

Connector to Harness Index (cont'd)

Front Passenger's Door Wire Harness A

Connector or Terminal	Ref	Cavities	Location	Connects to	Notes
Front passenger's door courtesy light	12	2	Front passenger's door		
Front passenger's door inner handle light	6	2	Front passenger's door		
Front passenger's door lock switch	5	4	Front passenger's door		
Front passenger's door pocket light	13	2	Front passenger's door		
Front passenger's MPCS unit connector A	1	28	Front passenger's door		
Front passenger's MPCS unit connector B	15	14	Front passenger's door		
Front passenger's power window switch	7	10	Front passenger's door		
Right power mirror	3	16	Front passenger's door		
C773	4	20	Front passenger's door	Front passenger's door wire harness B	
C776 (Junction connector)	17	12	Front passenger's door		

Front Passenger's Door Wire Harness B

Connector or Terminal	Ref	Cavities	Location	Connects to	Notes
Front passenger's door lock actuator/ knob switch/door switch connector A	9	10	Front passenger's door		
Front passenger's door lock actuator/ knob switch/door switch connector B	11	2	Front passenger's door		
Front passenger's door LF antenna/ outer handle light/touch sensor	8	8	Front passenger's door		
Front passenger's power window motor	14	6	Front passenger's door		
Front passenger's door speaker	16	2	Front passenger's door		
Tweeter (right)	2	2	Front passenger's door		
C773	4	20	Front passenger's door	Front passenger's door wire harness A	
C774	18	37	Front passenger's door	Front passenger's door subharness	
C775 (Junction connector)	10	12	Front passenger's door		

Front Passenger's Door Subharness

Connector or Terminal	Ref	Cavities	Location	Connects to	Notes
C771	19	20	Under right side of dash	Dashboard wire harness (see page 22-38)	
C772	20	6	Under right side of dash	Right side wire harness (see page 22-44)	
C774	18	37	Front passenger's door	Front passenger's door wire harness B	

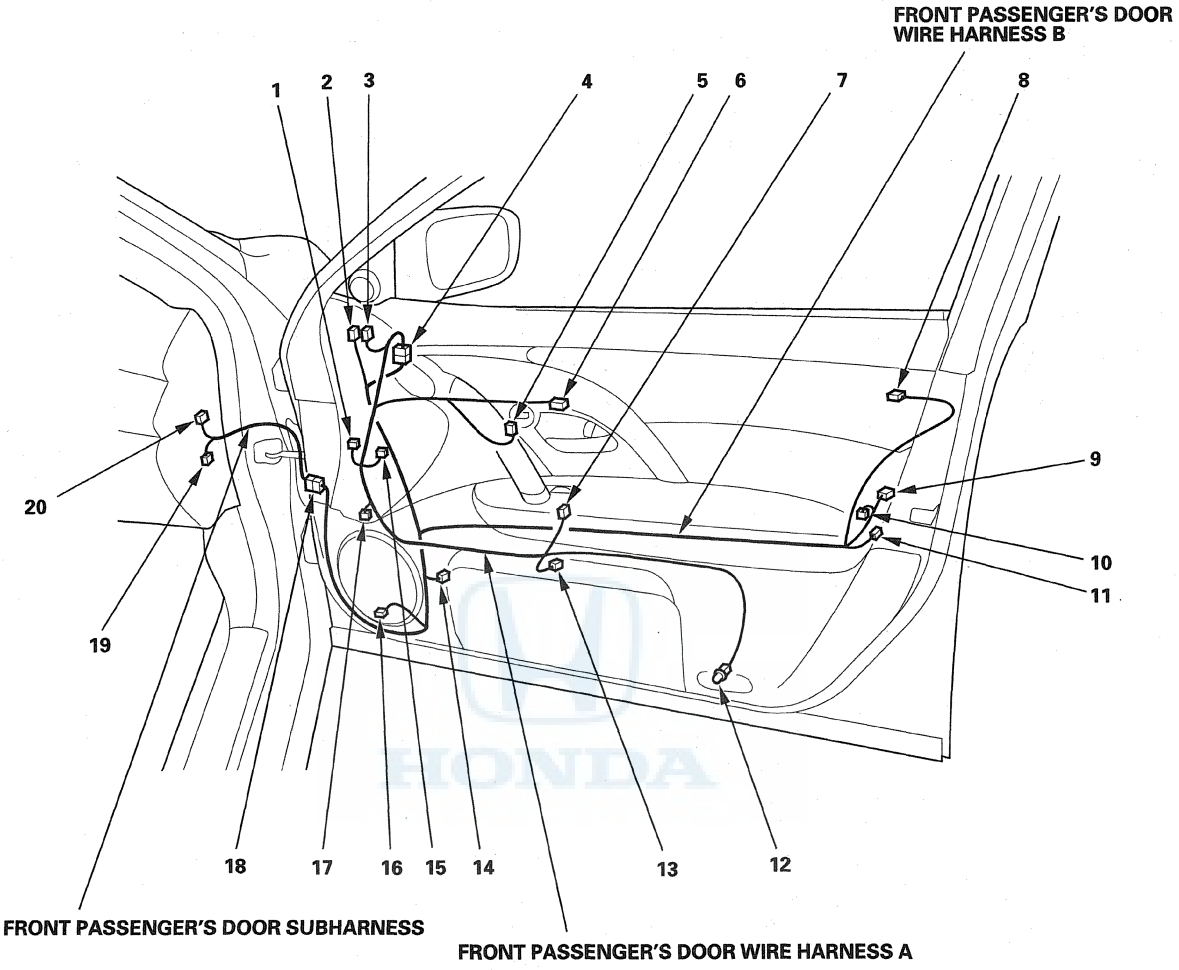
FRONT PASSENGER'S DOOR WIRE HARNESS B
1
2
3
4
5
6
7
8
9
10
11
12
13
14
15
16
17
18
19
20
FRONT PASSENGER'S DOOR SUBHARNESS
FRONT PASSENGER'S DOOR WIRE HARNESS A

Connector to Harness Index (cont'd)

Left Rear Door Wire Harness

Connector or Terminal	Ref	Cavities	Location	Connects to	Notes
Left rear door lock actuator/knob switch/door switch connector A	2	10	Left rear door		
Left rear door lock actuator/knob switch/door switch connector B	1	2	Left rear door		
Left rear power window motor	11	6	Left rear door		
Left rear power window switch	8	14	Left rear door		
Left rear door speaker	6	2	Left rear door		
C781	5	17	Left B-pillar	Left side wire harness (see page 22-40)	
C782	7	6	Left rear door	Left rear door subharness	
C783 (Junction connector)	9	12	Left rear door		

Left Rear Door Subharness

Connector or Terminal	Ref	Cavities	Location	Connects to	Notes
Left rear door ashtray light	3	2	Left rear door		
Left rear door courtesy light	10	2	Left rear door		
Left rear door inner handle light	4	2	Left rear door		
C782	7	6	Left rear door	Left rear door wire harness	

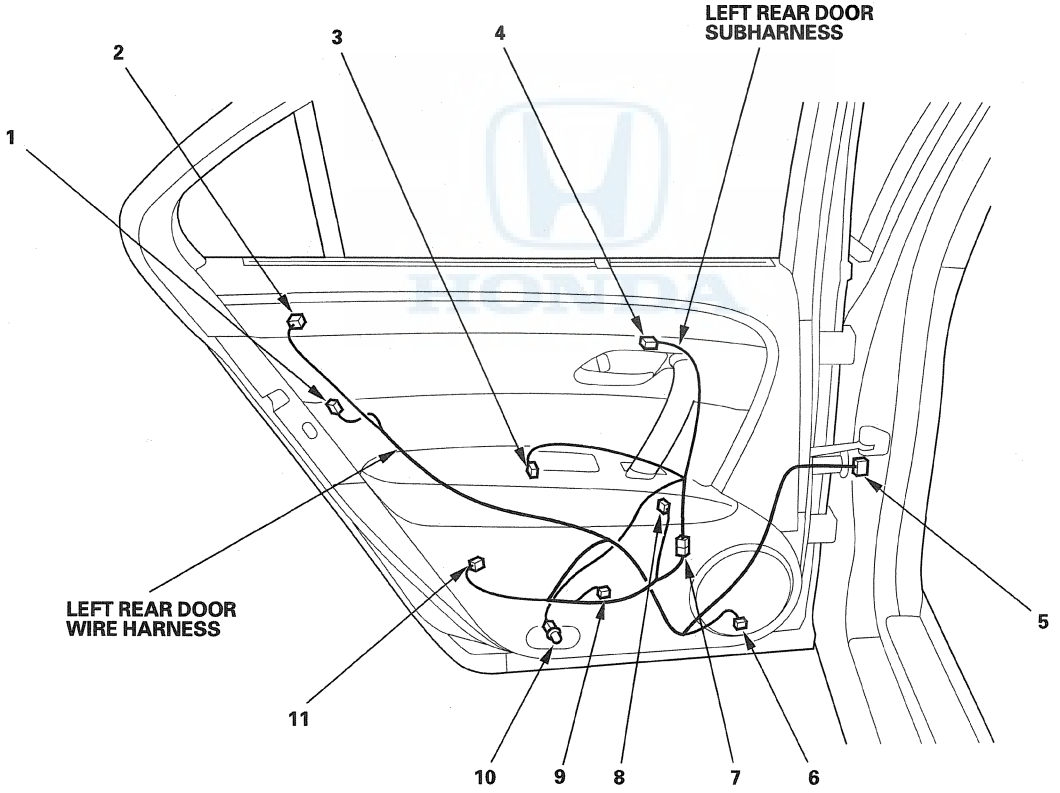

Right Rear Door Wire Harness

Connector or Terminal	Ref	Cavities	Location	Connects to	Notes
Right rear door lock actuator/knob switch/door switch connector A	5	10	Right rear door		
Right rear door lock actuator/knob switch/door switch connector B	6	2	Right rear door		
Right rear power window motor	7	6	Right rear door		
Right rear power window switch	3	14	Right rear door		
Right rear door speaker	11	2	Right rear door		
C791	1	17	Right B-pillar	Right side wire harness (see page 22-44)	
C792	10	6	Right rear door	Right rear door subharness	
C793 (Junction connector)	9	12	Right rear door		

Right Rear Door Subharness

Connector or Terminal	Ref	Cavities	Location	Connects to	Notes
Right rear door ashtray light	4	2	Right rear door		
Right rear door courtesy light	8	2	Right rear door		
Right rear door inner handle light	2	2	Right rear door		
C792	10	6	Right rear door	Right rear door wire harness	

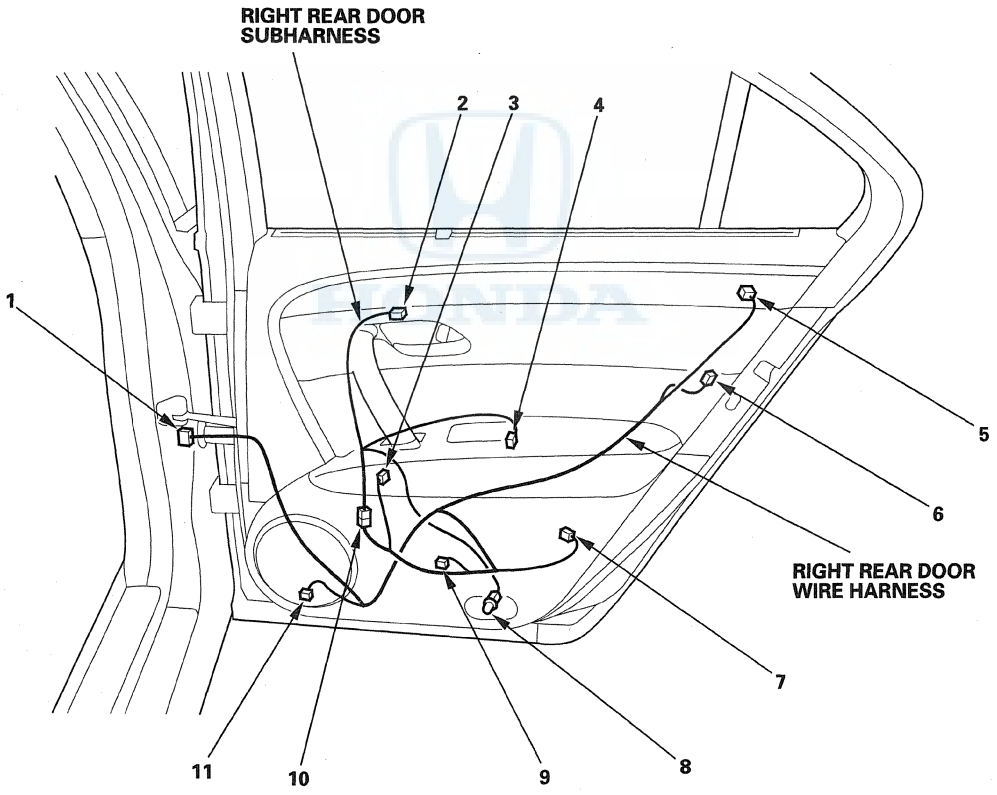

Connector to Harness Index (cont'd)

Front Accessory Power Socket Subharness

Connector or Terminal	Ref	Cavities	Location	Connects to	Notes
Front accessory power socket	2	2	Under console panel		
C528	1	6	Under console panel	Dashboard wire harness (see page 22-36)	

Console Subharness

Connector or Terminal	Ref	Cavities	Location	Connects to	Notes
Console box light	4	2	Under console panel		
Left rear seat heater switch	7	6	Behind center console rear cover		*
Rear accessory power socket	5	2	Under console panel		
Rear interior LF antenna	8	2	Behind center console rear cover		
Right rear seat heater switch	6	6	Behind center console rear cover		*
C551	3	23	Under console panel	Dashboard wire harness (see page 22-36).	
C552 (Junction connector)	9	12	Behind center console rear cover		*

*: With rear seat heater

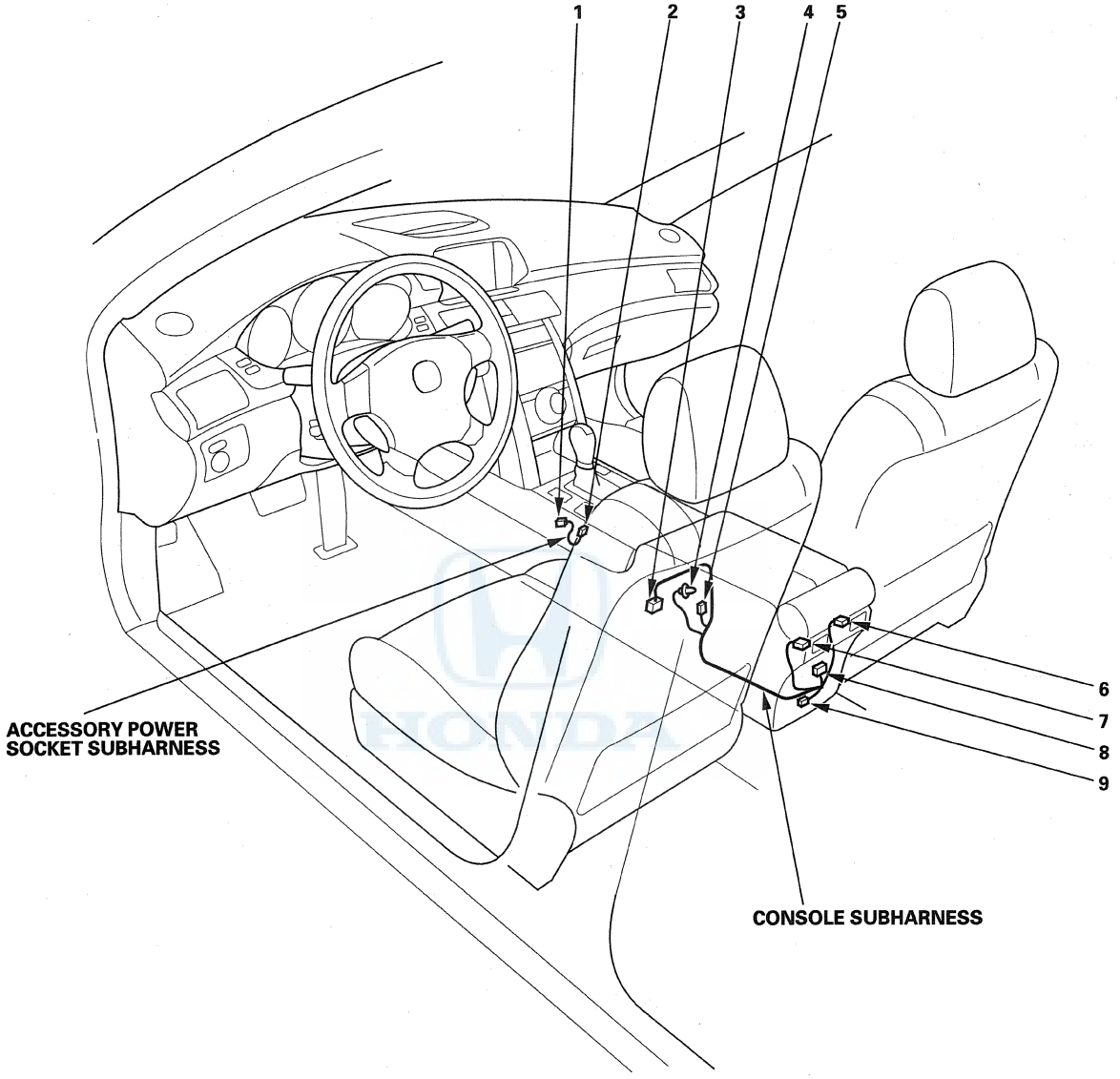
1
2
3
4
5
6
7
8
9
ACCESSORY POWER SOCKET SUBHARNESS
CONSOLE SUBHARNESS

Connector to Harness Index (cont'd)

Driver's Seat Wire Harness

Connector or Terminal	Ref	Cavities	Location	Connects to	Notes
Driver's lumbar support motor	3	2	Right side of driver's seat		
Driver's lumbar support switch	9	5	Left side of driver's seat		
Driver's power seat adjustment switch	10	12	Left side of driver's seat		
Driver's power seat control unit connector A	11	40	Under driver's seat		
Driver's power seat control unit connector B	14	18	Under driver's seat		
Driver's power seat front up-down motor/position sensor	21	5	Under driver's seat		
Driver's power seat rear up-down motor/position sensor	8	5	Under driver's seat		
Driver's power seat recline motor/ position sensor	5	5	Bottom of driver's seat-back		
Driver's power seat slide motor/ position sensor	6	5	under driver's seat		
Driver's seat-back outer fan motor	2	3	Driver's seat-back		* 1
Driver's seat-back inner fan motor	1	3	Driver's seat-back		* 1
Driver's seat-back heater	4	2	Bottom of driver's seat-back		
Driver's seat belt buckle switch	15	4	Under driver's seat		
Driver's seat cushion front fan motor	16	3	Under driver's seat		* 1
Driver's seat cushion heater	12	5	Under driver's seat		* 1
Driver's seat cushion heater	16	4	Under driver's seat		* 2
Driver's seat cushion rear fan motor	13	3	Under driver's seat		* 1
Driver's seat position sensor	7	2	Under driver's seat		
Driver's seat ventilation control unit	17	26	Under driver's seat		* 1
C901	20	23	Under driver's seat	Left side wire harness (see page 22-40)	
C902	18	6	Under driver's seat	Left side wire harness (see page 22-40)	* 1
C903	19	2	Under driver's seat	Left side wire harness (see page 22-40)	

* 1: With seat ventilation
* 2: Without seat ventilation

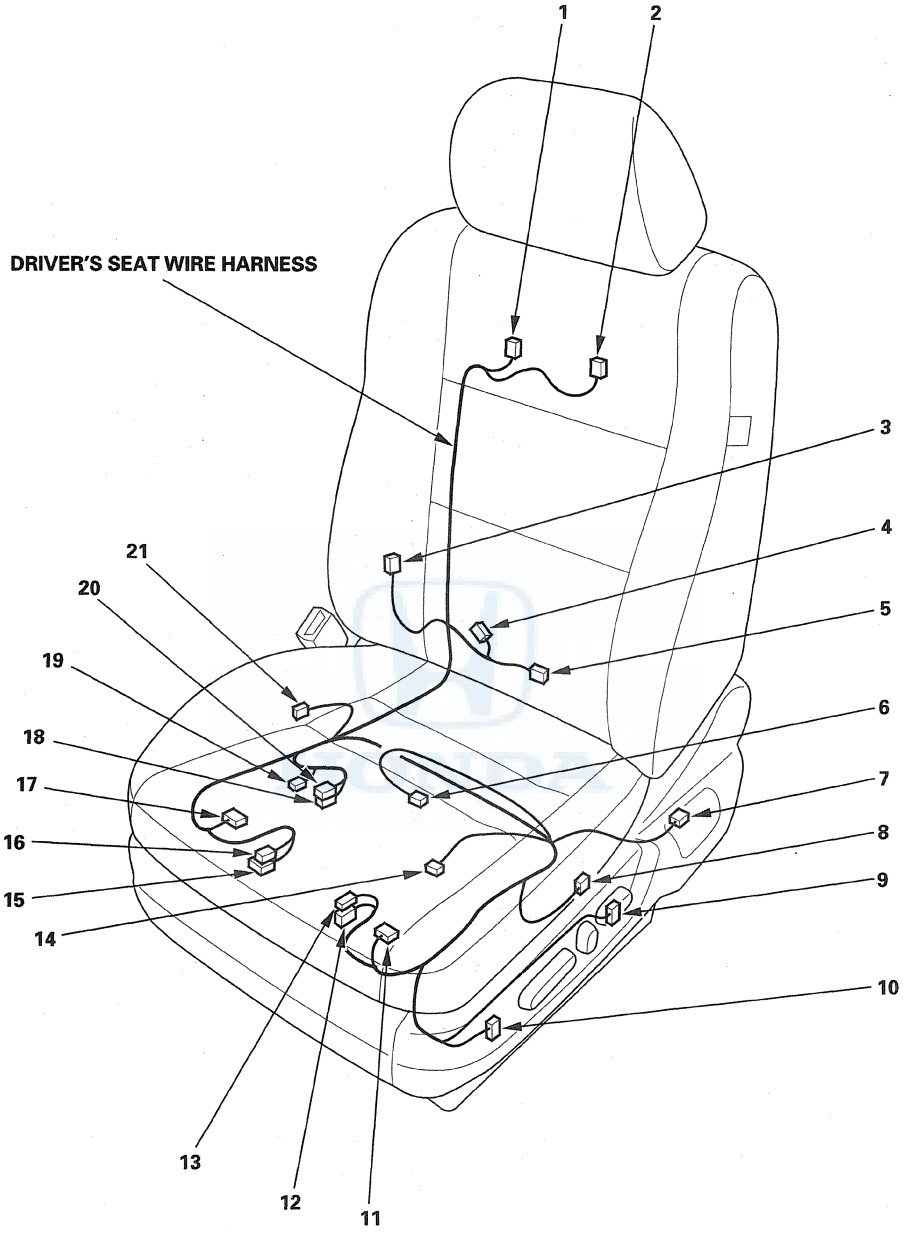
DRIVER'S SEAT WIRE HARNESS
1
2
3
4
5
6
7
8
9
10
11
12
13
14
15
16
17
18
19
20
21

Connector to Harness Index (cont'd)

Front Passenger's Seat Wire Harness

Connector or Terminal	Ref	Cavities	Location	Connects to	Notes
Front passenger's lumbar support motor	4	2	Left side of front passenger's seat		
Front passenger's lumbar support switch	18	5	Right side of front passenger's seat		
Front passenger's power seat adjustment switch	15	12	Right side of front passenger's seat		
Front passenger's power seat front up-down motor	6	2	Under front passenger's seat		
Front passenger's power seat rear up-down motor	16	2	Under front passenger's seat		
Front passenger's power seat recline motor	19	2	Bottom of front passenger's seat-back		
Front passenger's power seat slide motor	10	5	Under front passenger's seat		
Front passenger's seat-back inner fan motor	2	3	Front passenger's seat-back		
Front passenger's seat-back outer fan motor	1	3	Front passenger's seat-back		
Front passenger's seat belt buckle switch	9	4	Under front passenger's seat		* 1
Front passenger's seat cushion heater	8	5	Under front passenger's seat		* 1
Front passenger's seat cushion heater	7	3	Under front passenger's seat		* 2
Front passenger's seat cushion front fan motor	11	3	Under front passenger's seat		* 1
Front passenger's seat cushion rear fan motor	7	2	Under front passenger's seat		* 1
Front passenger's seat ventilation control unit	12	26	Under front passenger's seat		* 1
Front passenger's weight sensor (inner side)	5	2	Under front passenger's seat		* 1
Front passenger's weight sensor (outer side)	17	3	Under front passenger's seat		
ODS unit connector D	3	18	Left side of front passenger's seat		
C931	13	23	Under front passenger's seat	Right side wire harness (see page 22-44)	
C932	14	4	Under front passenger's seat	Right side wire harness (see page 22-44)	

* 1: With seat ventilation
* 2: Without seat ventilation

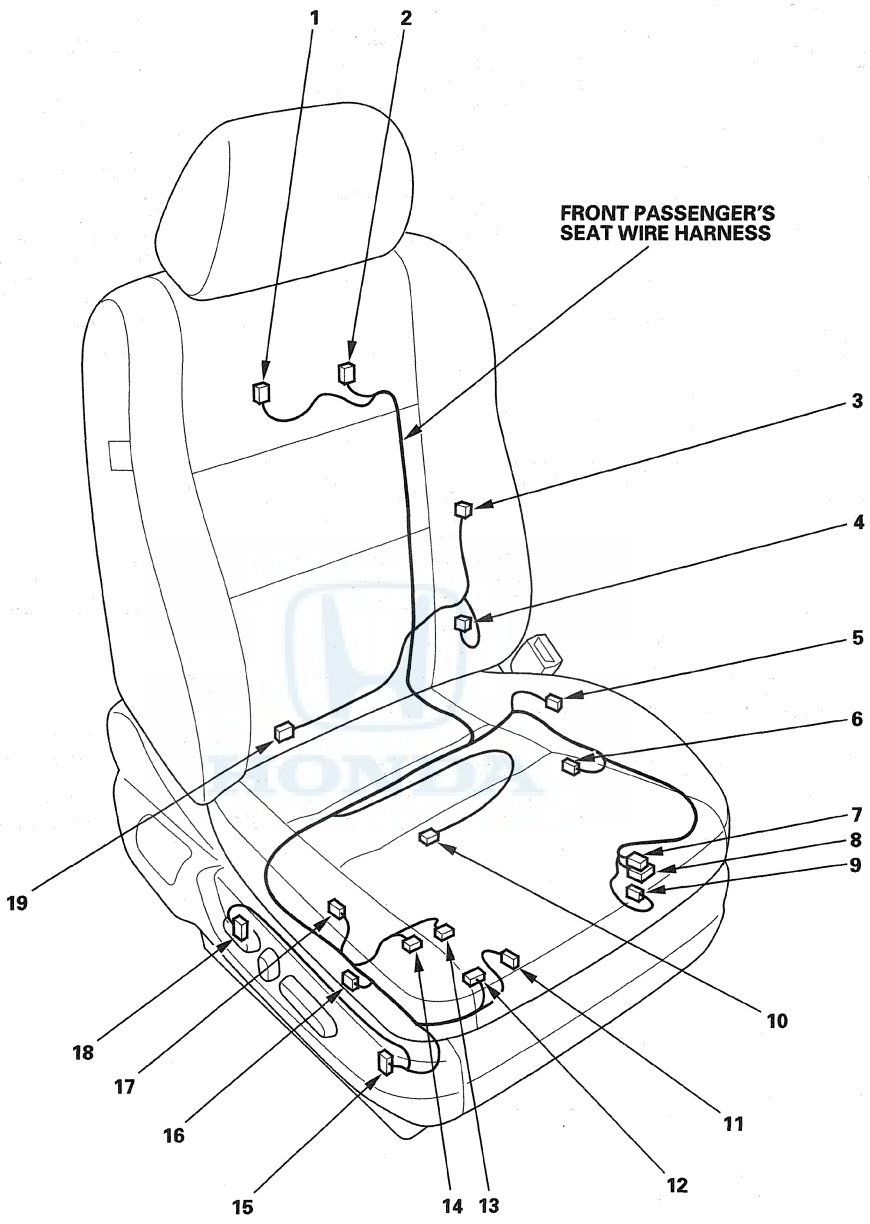
1
2
FRONT PASSENGER'S
SEAT WIRE HARNESS
3
4
5
6
7
8
9
10
11
12
13
14
15
16
17
18
19

Connector to Harness Index (cont'd)

Rear Headrest Subharness

Connector or Terminal	Ref	Cavities	Location	Connects to	Notes
Left rear seat-back heater	7	2	Left side of rear seat-back		* 1
Right rear seat-back heater	12	2	Right side of rear seat-back		* 1
C951	8	8	Left side of rear seat	Left side wire harness (see page 22-42)	* 1
C951	8	3	Left side of rear seat	Left side wire harness (see page 22-42)	* 2
C961	15	3	Right side of rear seat-back	Rear headrest actuator subharness	
C962	6	3	Left side of rear seat-back	Rear headrest actuator subharness	
C963	13	3	Center of rear seat-back	Rear headrest actuator subharness	
C964	10	8	Under center of rear seat cushion	Rear seat cushion heater subharness	* 1

* 1: With rear seat heater
* 2: Without rear seat heater

Rear Headrest Actuator Subharness

Connector or Terminal	Ref	Cavities	Location	Connects to	Notes
Center rear headrest actuator	14	2	In the center rear headrest		
Left rear headrest actuator	5	2	In the left rear headrest		
Right rear headrest actuator	2	2	In the right rear headrest		
C961	15	3	Right side of rear seat-back	Rear headrest subharness	
C962	6	3	Left side of rear seat-back	Rear headrest subharness	
C963	13	3	Center of rear seat-back	Rear headrest subharness	
T16	4		In the left rear headrest		
T17	3		In the center rear headrest		
T18	1		In the right rear headrest		

Rear Seat Heater Subharness (Canada models with rear seat heater)

Connector or Terminal	Ref	Cavities	Location	Connects to	Notes
Left rear seat cushion heater	9	3	Under left side or rear seat cushion		
Right rear seat cushion heater	11	4	Under right side or rear seat cushion		
C964	10	8	Under center or rear seat cushion	Rear headrest subharness	

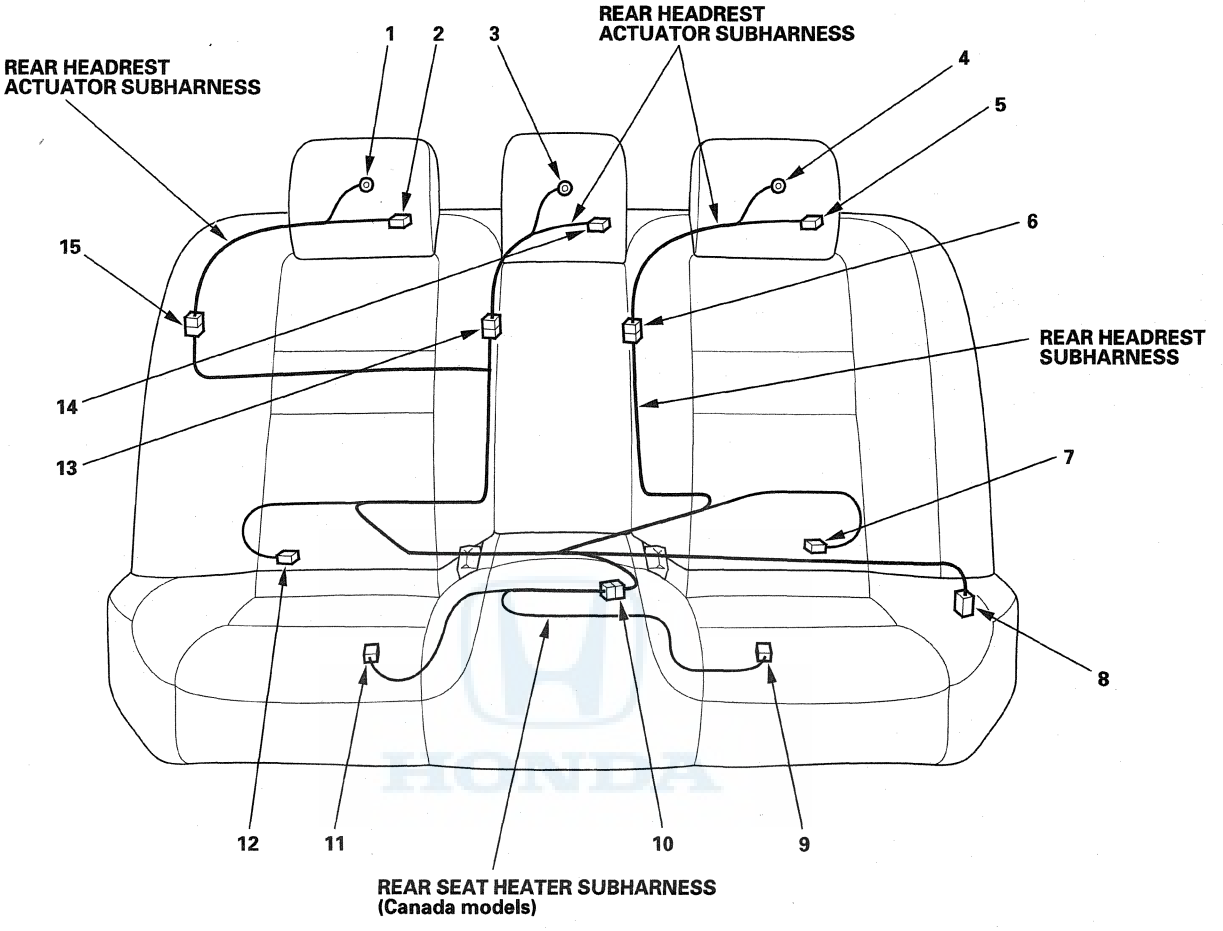
REAR HEADREST
ACTUATOR SUBHARNESS
1
2
3
REAR HEADREST
ACTUATOR SUBHARNESS
4
5
6
15
REAR HEADREST
SUBHARNESS
14
13
7
8
12
11
10
9
REAR SEAT HEATER SUBHARNESS
(Canada models)

Connector to Harness Index (cont'd)

A/C Wire Harness

Connector or Terminal	Ref	Cavities	Location	Connects to	Notes
Blower motor	7	2	Under middle of dash		
Blower power transistor	10	5	Under middle of dash		
Driver's air mix control motor	1	5	Under middle of dash		
Driver's cool vent control motor	4	5	Under middle of dash		
Evaporator temperature sensor	3	2	Under middle of dash		
Front passenger's air mix control motor	11	5	Under middle of dash		
HVAC control motor relay	9	4	Under middle of dash		
Mode control motor	2	5	Under middle of dash		
Passenger's cool vent control motor	13	5	Under middle of dash		
Rear vent control motor	12	5	Under middle of dash		
Recirculation control motor	8	5	Under middle of dash		
C502	6	12	Under middle of dash	Dashboard wire harness (see page 22-38)	
C503	5	2	Under middle of dash	Dashboard wire harness (see page 22-38)	

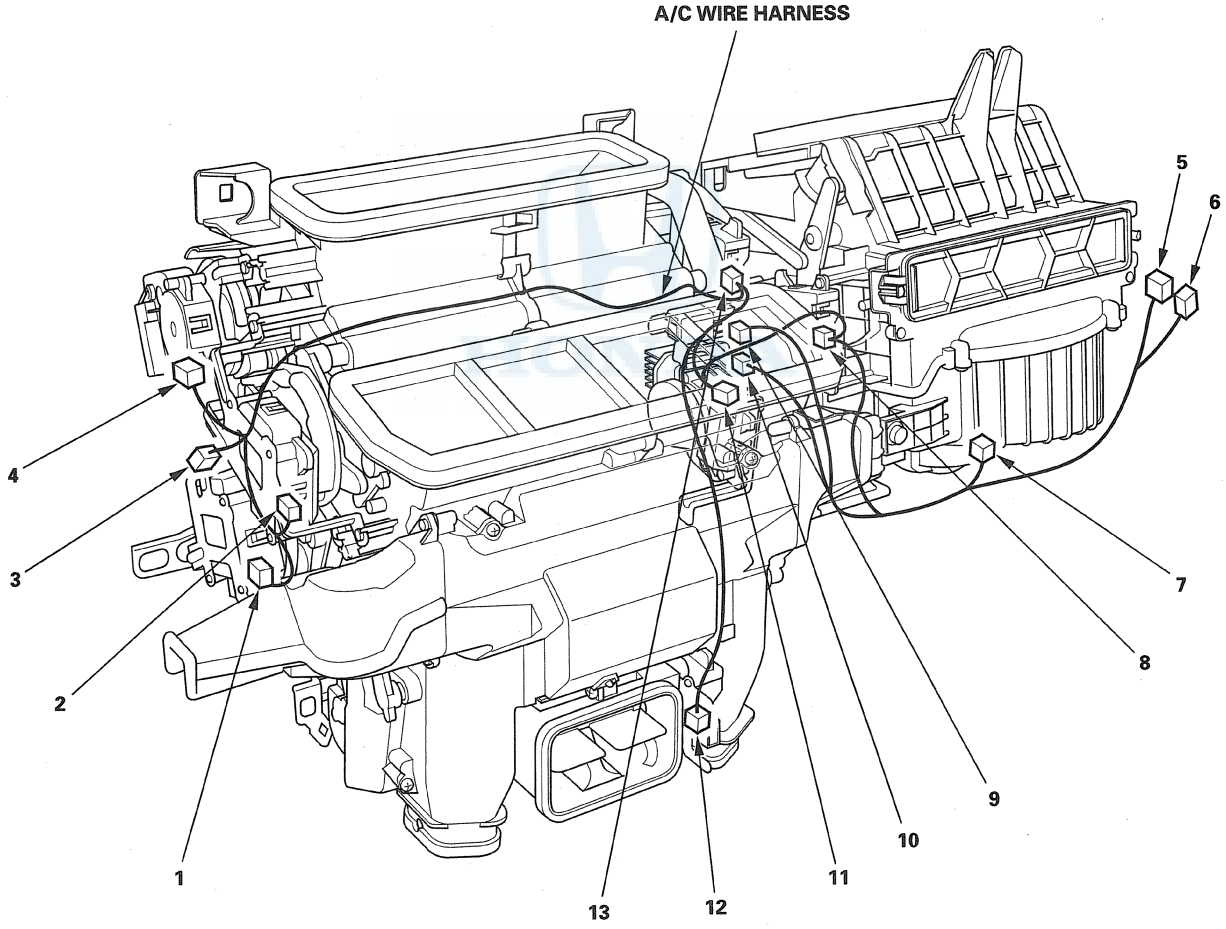

A/C Compressor Clutch Subharness

Connector or Terminal	Ref	Cavities	Location	Connects to	Notes
A/C compressor clutch	4	3	Behind radiator		
Engine coolant temperature (ECT) sensor 2	2	2	Behind radiator		
C309	1	6	Behind radiator fan	Engine compartment wire harness (see page 22-26)	
G351	3		Behind radiator fan	Body ground, via A/C compressor clutch subharness	

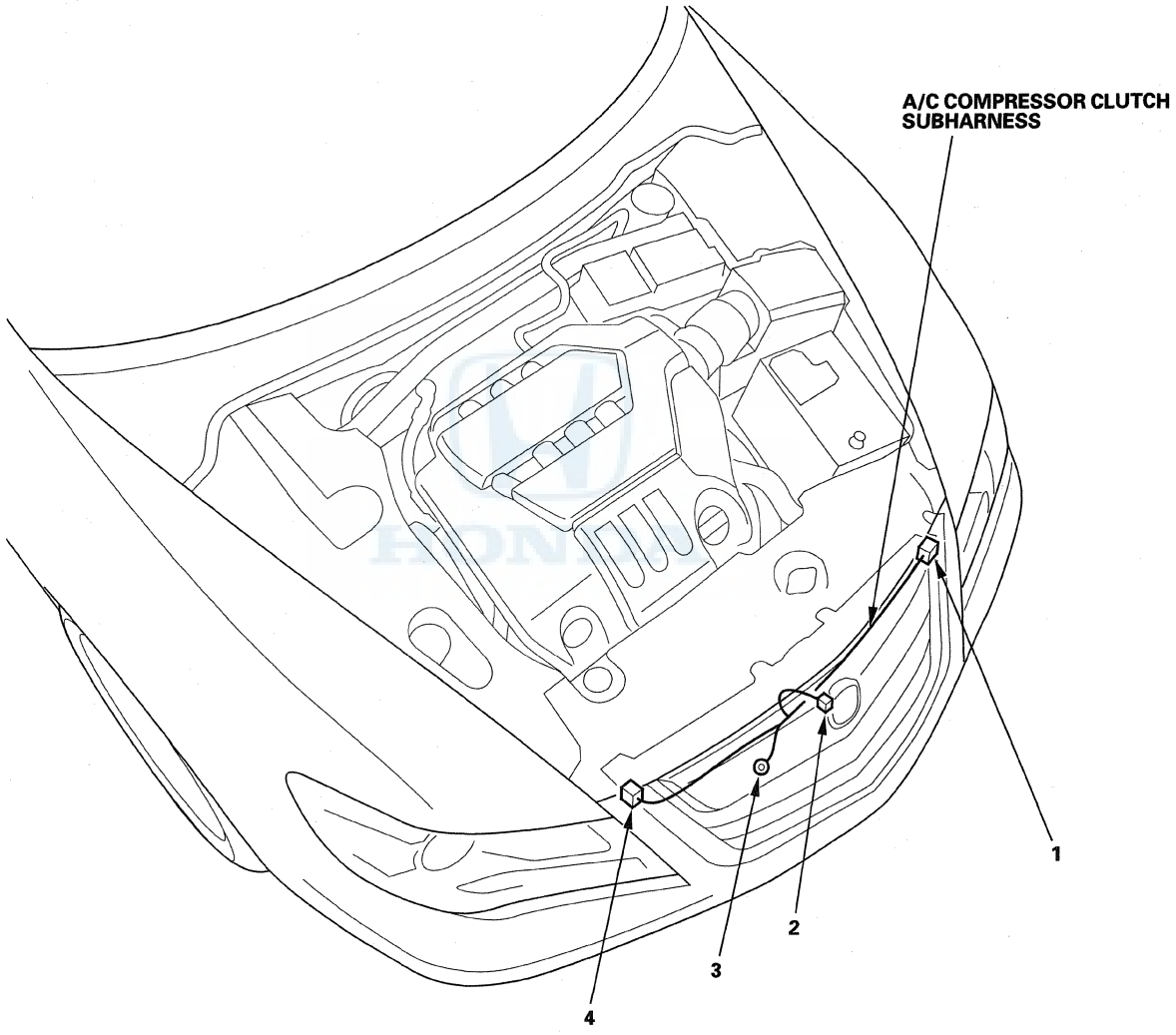

Connector to Harness Index (cont'd)

E-pretensioner Subharness

Connector or Terminal	Ref	Cavities	Location	Connects to	Notes
E-pretensioner unit connector A	1	5	Under middle of dash		
E-pretensioner unit connector B	2	14	Under middle of dash		
C991	5	12	Under middle of dash	Left side wire harness (see page 22-40)	
C992	3	5	Behind right kick panel	Right side wire harness (see page 22-44)	
C993	4	2	Behind right kick panel	Right side wire harness (see page 22-44)	

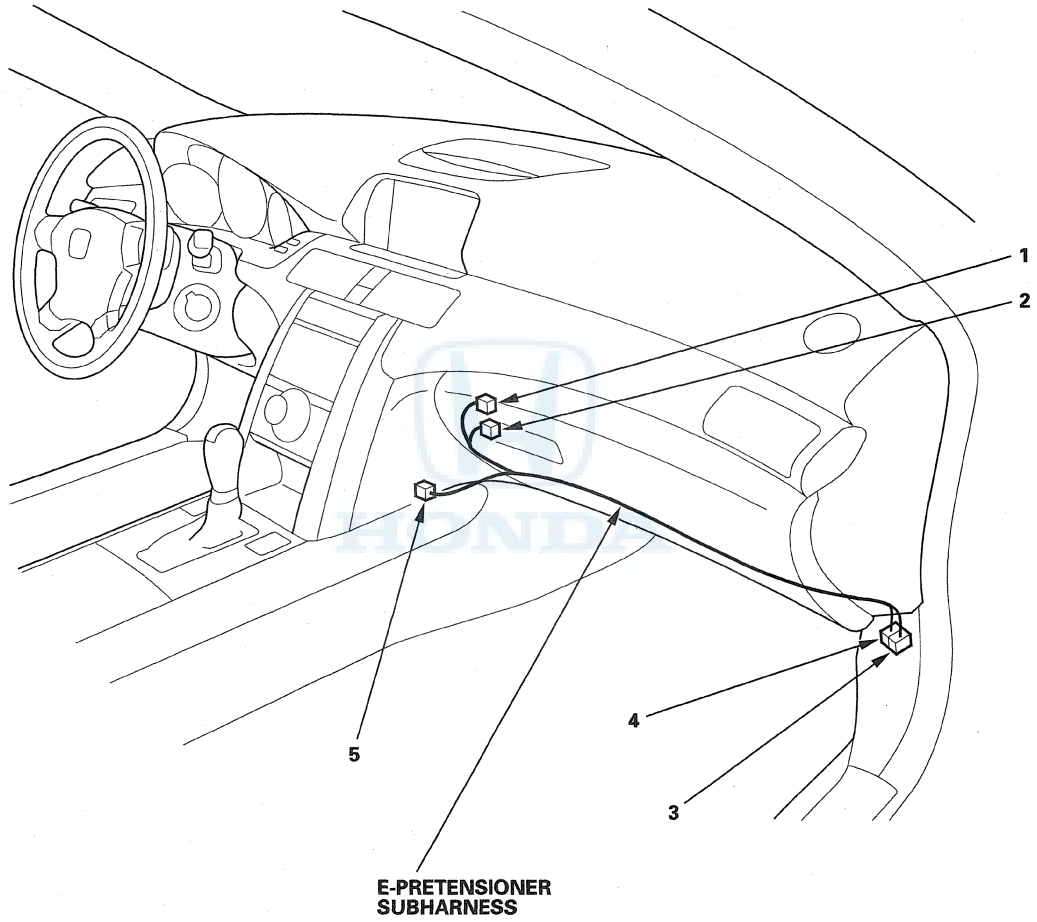

Fuse/Relay Boxes

Connector to Fuse/Relay Box Index

Under-hood Fuse/Relay Box

Socket	Ref	Terminal	Connects to
A/C compressor clutch relay	2	4	
A (ELD)	9	3	Engine compartment wire harness (see page 22-26)
B	11	1	Engine compartment wire harness (see page 22-26)
Blower motor relay	1	4	
C	12	2	Engine compartment wire harness (see page 22-26)
D	8	9	Engine compartment wire harness (see page 22-26)
E	13	16	Engine compartment wire harness (see page 22-26)
F	14	20	Engine compartment wire harness (see page 22-26)
Fog lights relay	4	4	
G	10	2	Engine compartment wire harness (see page 22-26)
H	15	14	Engine compartment wire harness (see page 22-26)
J	17	10	Engine compartment wire harness (see page 22-26)
K	16	5	Engine compartment wire harness (see page 22-26)
Rear window defogger relay	3	4	
Windshield wiper relay	5	4	
T1	7		Starter cable (see page 22-19)
T101	6		Engine wire harness (see page 22-20)

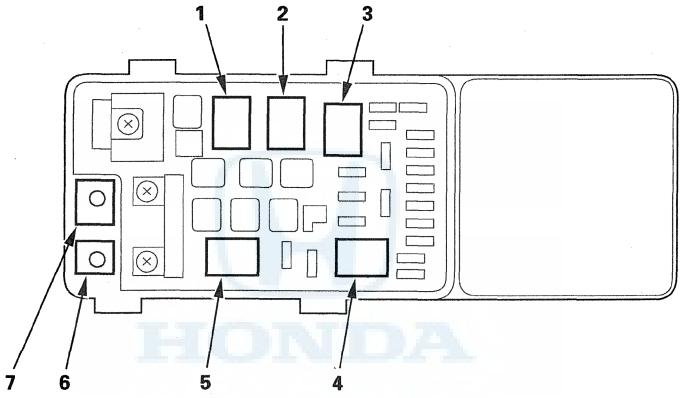

(Viewed from top)

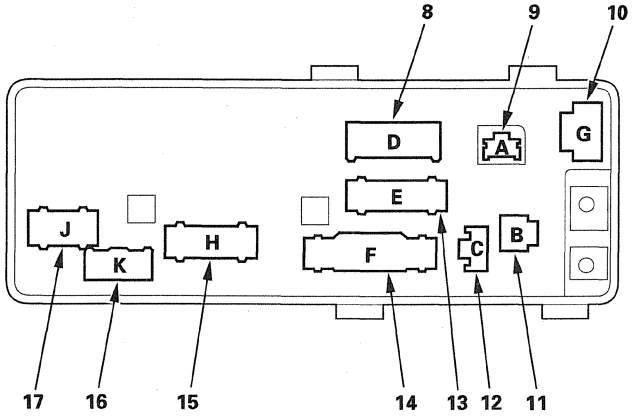

(Viewed from bottom)

Connector to Fuse/Relay Box Index (cont'd)

Auxiliary Under-hood Relay Box

Socket	Ref	Terminal	Connects to
Daytime running lights relay*	1	5	Engine compartment wire harness (see page 22-26)
Adaptive cruise control (ACC) relay	3	5	Engine compartment wire harness (see page 22-26)
Radiator fan control (RFC) unit relay	2	4	Engine compartment wire harness (see page 22-26)

*: Canada models

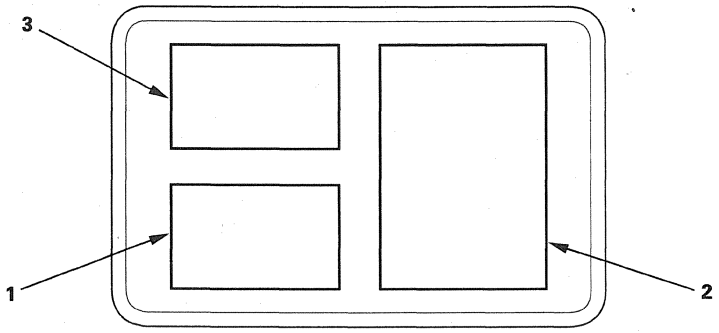

Driver's Under-dash Fuse/Relay Box

Socket	Ref	Terminal	Connects to
A	6	6	Dashboard wire harness (see page 22-32)
Accessory power socket relay	19	4	
A/F sensor relay	20	4	
B	12	6	Engine compartment wire harness (see page 22-28)
C	11	12	Engine compartment wire harness (see page 22-28)
D	13	17	Engine compartment wire harness (see page 22-28)
E	8	16	Left side wire harness (see page 22-40)
F	9	14	Left side wire harness (see page 22-40)
G	14	6	Left side wire harness (see page 22-40)
H	15	14	Left side wire harness (see page 22-40)
Ignition coil relay	23	4	
J	27	21	Left side wire harness (see page 22-40)
K	26	12	Driver's door subharness (see page 22-56)
M	25	3	MICU service check connector
N	2	45	Dashboard wire harness (see page 22-32)
P (MICU)	17	30	Dashboard wire harness (see page 22-32)
PGM-FI main relay 1 (FI MAIN)	21	4	
PGM-FI main relay 2 (FUEL PUMP)	24	4	
Q (MICU)	16	14	Left side wire harness (see page 22-40)
R (MES connector)	3	2	Dashboard wire harness (see page 22-32)
S	5	2	Dashboard wire harness (see page 22-32)
Starter cut relay 2	18	4	
T	7	6	Dashboard wire harness (see page 22-32)
Turn signal/hazard relay 1	4	6	
W	10	5	Left side wire harness (see page 22-40)
X	1	39	Dashboard wire harness (see page 22-32)
Y	22		Not used

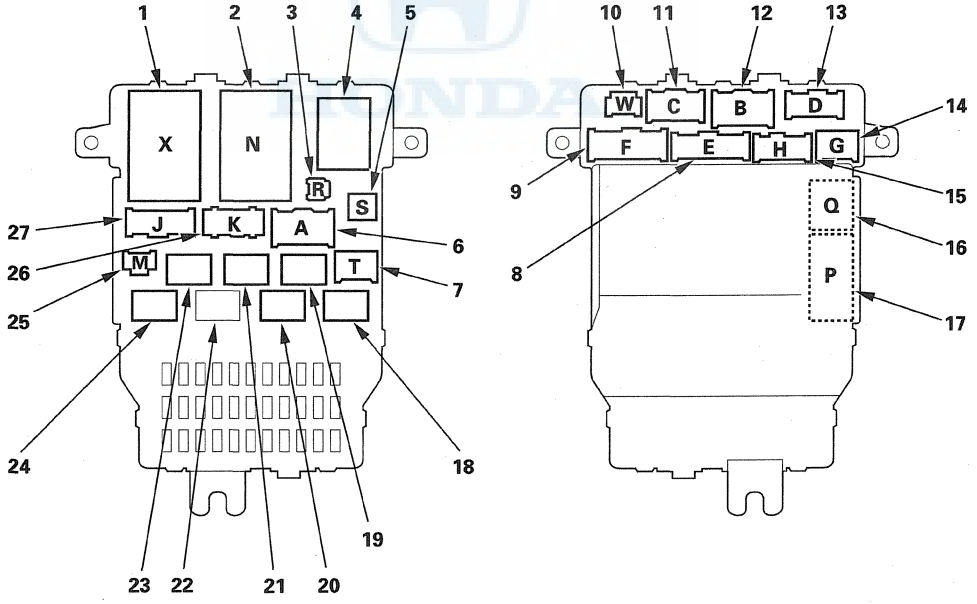

Connector to Fuse/Relay Box Index (cont'd)

Passenger's Under-dash Fuse/Relay Box

Socket	Ref	Terminal	Connects to
A	1	1	Engine compartment wire harness (see page 22-30)
B	2	10	Engine compartment wire harness (see page 22-30)
C	9	5	Right side wire harness (see page 22-44)
D	6	17	Dashboard wire harness (see page 22-38)
E	11	14	Dashboard wire harness (see page 22-38)
Fuel fill door open relay	5	4	
F	7	8	Right side wire harness (see page 22-44)
G	8	14	Right side wire harness (see page 22-44)
H	10	3	Dashboard wire harness (see page 22-38)
J	3	13	Engine compartment wire harness (see page 22-30)
Headlight washer relay*	12	4	
Seat heater relay	4	4	
Throttle actuator control module relay	13	4	

*: Canada models

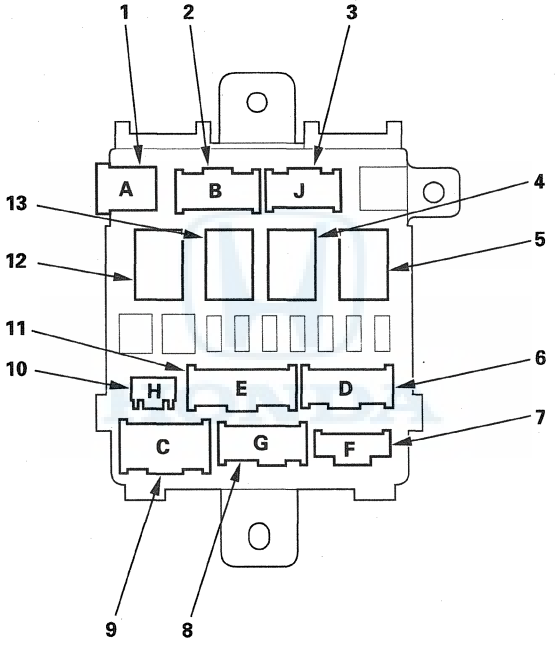

Auxiliary Under-dash Fuse/Relay Box

Socket	Ref	Terminal	Connects to
Starter cut relay 1	1	4	Engine compartment wire harness (see page 22-28)

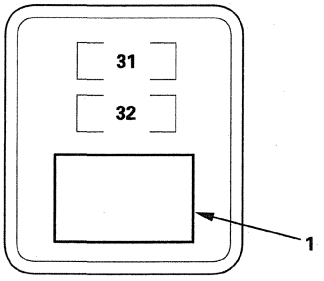

Driver's Auxiliary Under-dash Relay Box

Socket	Ref	Terminal	Connects to
ACC cut relay	3	5	Dashboard wire harness (see page 22-34)
IG2 cut relay	2	5	Dashboard wire harness (see page 22-34)

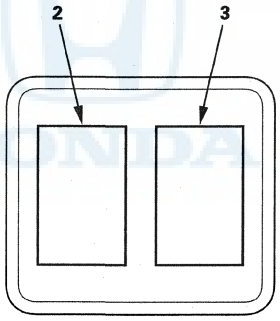

Passenger's Auxiliary Under-dash Relay Box (Canada models)

Socket	Ref	Terminal	Connects to
Rear seat heater relay	4	4	Dashboard wire harness (see page 22-38)

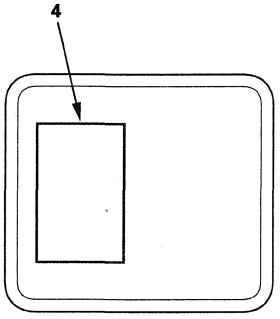

Fuse to Components Index

Auxiliary Under-dash Fuse/Relay Box

Fuse Number	Amps	Wire Color	Component(s) or Circuit(s) Protected
31	7.5 A	BLU	Ignition switch (ST)
		LT BLU	PCM (STS)
32	7.5 A	RED	Starter cut relay 1
		PNK	PCM (STRLD)

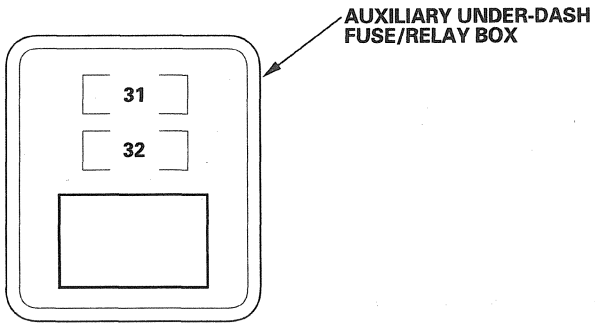

Battery Terminal Fuse Box

Fuse Number	Amps	Wire Color	Component(s) or Circuit(s) Protected
34	50 A	BLK	Radiator fan control (RFC) unit
35	———	———	Not used

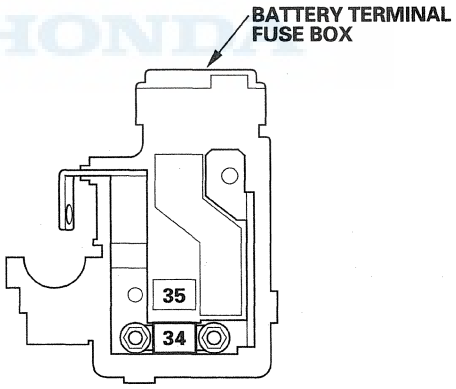

Under-hood Fuse/Relay Box

Fuse Number	Amps	Component(s) or Circuit(s) Protected
1	15 A	Left headlight (HID unit)
2	30 A	Relay control module, Rear window defogger coil
3	10 A	Left headlight (High beam)
4	15 A	Front parking lights, Dash light, License plate lights, Roof console lights, Taillights, Rear door ashtray lights, Seat heater switches light, Seat ventilation switch lights*, No. 7 (7.5 A) fuse in the passenger's under-dash fuse/relay box
5	10 A	Right headlight (High beam)
6	15 A	Right headlight (HID unit)
7	7.5 A	Relay control module
8	15 A	PGM-FI main relay 1, Data link connector
		Via PGM-FI main relay 1: PGM-FI main relay 2, CKP sensor A/B, CMP sensor, Injectors, PCM, Throttle actuator control module relay
9	30 A	Windshield wiper motor (via windshield wiper motor relay)
10	30 A	Headlight washer motor (via headlight washer relay)*
11	10 A	Fog lights
12	7.5 A	A/C compressor clutch
13	15 A	Brake lights, High mount brake light, Adaptive cruise control (ACC) unit (via adaptive cruise control (ACC) relay)
		Horns (via relay control module)
14	40 A	Rear window defogger, Noise condenser (via driver's under-dash fuse/relay box)
15	40 A	No. 5, No. 6, No. 7, No. 8 and No. 9 fuses in the driver's under-dash fuse/relay box
16	15 A	Turn signal/hazard relay, MICU
17	30 A	VSA modulator-control unit
18	40 A	VSA modulator-control unit
19	40 A	No. 1, No. 2, No. 3 and No. 4 fuse in the driver's under-dash fuse/relay box
20	40 A	No. 12, No. 13, No. 14, No. 15, No. 16 and No. 17 fuse in the driver's under-dash fuse/relay box
21	40 A	Blower motor
22	120 A (BAT)	Battery, Power distribution
	70 A (AS F/B)	Passenger's under-dash fuse/relay box
23	50 A (IG)	Ignition switch (BAT), Starter motor (via starter cut relay 1, 2)
	50 A (P/W)	No. 24, No. 25, No. 26, No. 27 and No. 28 fuse in the driver's under-dash fuse/relay box, Power windows

*: Canada models

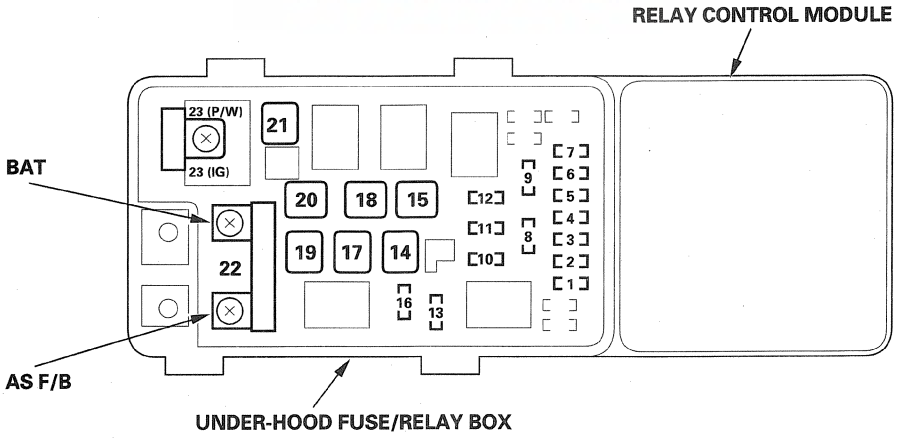

(cont'd)

Fuse to Components Index (cont'd)

Driver's Under-dash Fuse/Relay Box

Fuse Number	Amps	Component(s) or Circuit(s) Protected
1	15 A	Throttle actuator control module relay (in the passenger's under-dash fuse/relay box)
2	15 A	Ignition coil relay
		Ignition coils (via ignition coil relay)
3	10 A	Daytime running lights control unit (USA models), Daytime running lights control relay (Canada models)
4	15 A	Front A/F sensor (bank 2, sensor 1), Front SHO2S (bank 2, sensor 2), Rear A/F sensor (bank 1, sensor 1), Rear SHO2S (bank 1, sensor 2)
5	7.5 A	AcuraLink control unit (XM receiver), Audio unit, Navigation unit, HandsFreeLink control unit, Navigation display unit, Active noise cancellation unit
6	7.5 A	Keyless access control unit, Footwell lights, Courtesy lights, Door inner handle lights, Door outer handle lights, Trunk lights, Individual map lights, Vanity mirror lights, Driver's MPCS unit, Front passenger's MPCS unit, Left and right rear power window switches, Driver's outer handle touch sensor, Front passenger's outer handle touch sensor
7	10 A	Combination switch control unit, Gauge control module, Immobilizer control unit-receiver, Imoes unit, Driver's MPCS unit, Front passenger's MPCS unit, Power seat control unit, Power tilt/telescopic steering control unit, Navigation display unit, Navigation unit, Keyless access control unit, Ignition key light, Adaptive cruise control unit
		MICU
8	20 A	MICU
9	20 A	Accessory power socket relays
10	7.5 A	ODS unit, Passenger's airbag cutoff indicator, SRS unit
11	15 A	Adaptive front lighting control unit, Power rear sunshade control unit, Windshield washer motor, Under-hood fuse/relay box
12	15 A	Rear seat heater (via seat heater relay) (Canada models)
13	20 A	Front passenger's power seat (recline and rear up/down motors)
14	20 A	Driver's lumbar support motor, Power seat control unit (VMP1)
15	7.5 A	TPMS control unit
16	20 A	Power seat control unit (VMP2)
17	20 A	Front passenger's lumbar support motor, Front passenger's power seat (slide and front up/down motors)
18	15 A	Alternator, ELD, Engine mount control solenoid, EVAP canister purge valve, PCM, PCM (via brake pedal position switch), Steering angle sensor, VSA modulator-control unit
19	20 A	PCM, Keyless access control unit, Fuel pump (via PGM-FI main relay 2)
20	15 A	Mass air flow (MAF) sensor/intake air temperature (IAT) sensor, PCM
21	10 A	Seat ventilation, Automatic dimming inside mirror, Combination switch control unit, Driver's MPCS unit, Gauge control module, Imoes unit, Power seat control unit, Power tilt/telescopic steering control unit, Shift lock solenoid, Seat belt tension reducer solenoid, TPMS control unit
		AcuraLink control unit (XM receiver), Daytime running lights control unit (USA models), Navigation unit, Power steering control unit, Seat belt tension reducers, XM receiver unit, Under-hood fuse/relay box (control block)
22	10 A	SRS unit
23	7.5 A	Radiator fan control (RFC) unit relay
		A/F sensor relay
24	20 A	Left rear power window switch
25	20 A	Power tilt/telescopic steering control unit
26	20 A	Power tilt/telescopic steering control unit
27	30 A	Driver's MPCS unit
28	20 A	Moonroof motor/control unit
29	7.5 A	Adaptive front lighting control unit, Headlight leveling control unit (Without AFS) Power steering control unit, SH-AWD control unit, Adaptive cruise control (ACC) unit, Millimeter wave radar unit, Adaptive cruise control (ACC) relay
30	7.5 A	A/C compressor clutch relay, Blower motor relay, Climate control unit, In-car temperature sensor, Rear seat heater relay (Canada models), Rear window defogger relay, Seat heater relay
31	7.5 A	E-pretensioner unit
32	10 A	AcuraLink control unit (XM receiver), Active noise cancellation rear microphone unit, HandsFreeLink control unit, Navigation display unit, Key interlock solenoid, Microphone, Navigation unit, Shift lock solenoid, Keyless access control unit, Interface dial, Active noise cancellation front microphone
		Accessory power socket relay, MICU
33	7.5 A	Not used

DRIVER'S UNDER-DASH FUSE/RELAY BOX

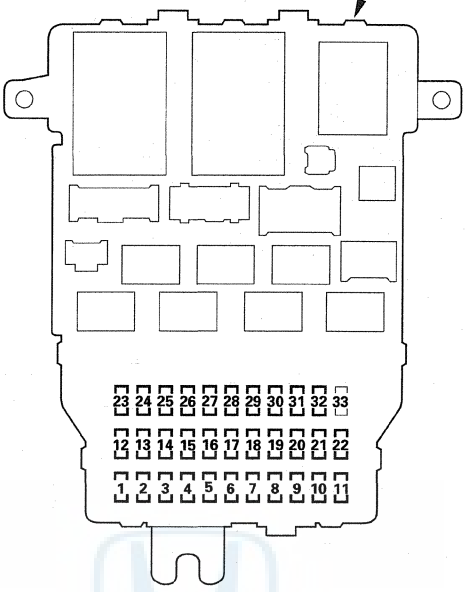

HONDA

(cont'd)

Fuse to Components Index (cont'd)

Passenger's Under-dash Fuse/Relay Box

Fuse Number	Amps	Component(s) or Circuit(s) Protected
1	30 A	SH-AWD control unit (via SH-AWD relay)
2	30 A	Stereo amplifier
3	30 A	Front passenger's MPCS unit
4	30 A	E-pretensioner unit
5	20 A	Right rear power window switch
6	20 A	Seat ventilation control units (with seat ventilation), Seat heater (via seat heater relay)
7	7.5 A	Audio unit, AFS OFF/VSA OFF switch, Cable reel, Climate control unit, Console box light, Coin pocket light, Dash lights brightness controller, Navigation display unit, Hazard warning switch/passenger's airbag cutoff indicator, Glove box light, A/T gear position panel light
8	30 A	E-pretensioner unit
9	7.5 A	Climate control unit (via control motor relay), Control motor relay

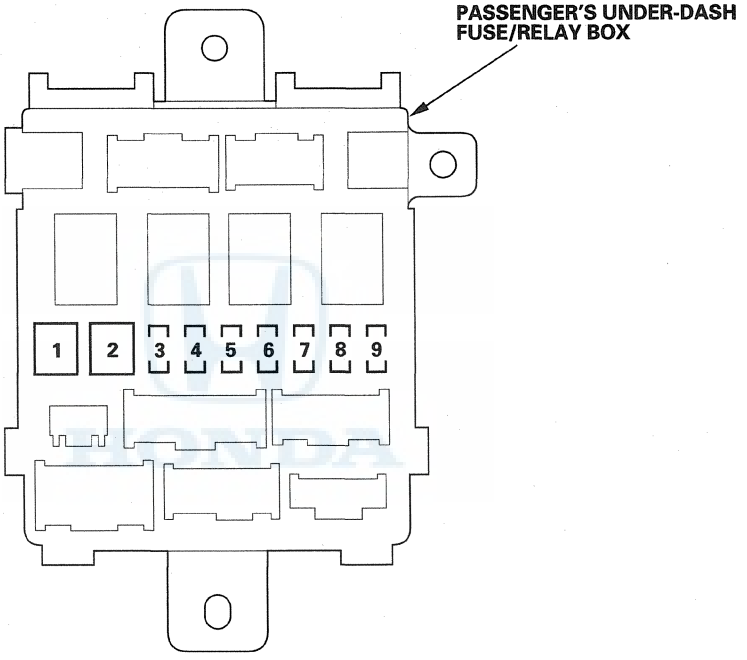

Ground Distribution

Ground to Components Index

Ground	Component or Circuit Grounded
G1	Battery terminal
G2	Transmission housing
G3	Engine mount bracket
G101	PCM (PG1 and PG2 are BLK; LG1 and LG2 are BRN/YEL) BLK: A/T clutch pressure control solenoid valves A, B, C, EGR valve, Ignition coils, Immobilizer control unit-receiver, Imoes unit, Transmission range switch, Throttle actuator control module BRN/YEL: CKP sensor A/B, CMP sensor, Rocker arm oil pressure switch
G201	Left fog light, Radiator fan control (RFC) unit, Right headlight (High beam), Right headlight (HID unit), Right front parking light, Right front side marker light, Right front turn signal light, Washer fluid level switch, Headlight washer motor (Canada models)
G202	VSA modulator-control unit
G301	Left headlight (High beam), Left headlight (HID UNIT), Left front parking light, Left front side marker light, Left front turn signal light, Daytime running rights relay (Canada models), Radiator fan control (RFC) unit (2 wires), Right fog light, In the under-hood fuse/relay box (ELD), Blower motor relay, Windshield washer motor relay, Windshield wiper motor relay, Windshield wiper motor intermittent relay, Relay control module)
G351	Radiator fan control (RFC) unit
G401	Adaptive cruise control (ACC) unit (3 wires), Adaptive front lighting control unit (2 wires), Brake fluid level switch, ECPS control unit, Security hood switch, Daytime running lights control unit (2 wires) (USA models), Headlight leveling control unit, Millimeter wave radar unit, Power steering pressure (PSP) switch, Windshield wiper motor
G501	AFS OFF/VSA OFF switch, Cable reel, Combination switch control unit, Data link connector (2 wires), Dash lights brightness controller, Gauge control module (2 wires), Headlight washer switch (Canada models), Ignition switch control unit, In-car temperature sensor, Keyless access control unit (2 wires), Navigation display unit, Park-pin switch, Power tilt/telescopic steering control unit, Power mirror switch, Rear seat heater relay
G502	BRN wire: MICU
G503	Accessory power sockets, Climate control unit, Console box light, Power tilt/telescopic steering control unit, Rear seat heater switches (Canada models), Turn signal/hazard relay 2 (sounder)
G504	Audio unit
G505	Memory erase signal (MES) connector, SRS unit (2 wires)
G506	A/C power transistor, Front passenger's door lock knob switch, Front passenger's door outer handle touch sensor (2 wires), Front passenger's door switch, Front seat heater relay, Fuel fill door open relay, Glove box light, Headlight washer relay (Canada models), Interface dial, Front passenger's MPCS unit (2 wires), Right power mirror (2 wires), Steering angle sensor, Trunk lid opener main switch
G601	Accessory power socket relay, Automatic dimming inside mirror, Driver's MPCS unit (2 wires), Driver's door outer handle touch sensor (2 wires), Driver's door lock knob switch, Driver's door key cylinder switch, Driver's door switch, Driver's seat belt buckle switch, Driver's seat ventilation control unit, Driver's seat ventilation fan motors, Driver's seat heater, Driver's seat heater switch, Driver's lumbar support switch (2 wires), Driver's position memory switch, High mount brake light, Left power mirror (2 wires), Left rear door switch, Left rear door lock knob switch, Left rear power window motor, Left rear door ashtray light, Left rear power window switch, MICU (2 wires), MICU service check connector, Moonroof motor/control unit, Power seat control unit (3 wires), Rear individual map lights, Roof console (2 wires), Trunk lid/Fuel fill door opener switch, Turn signal/ hazard relay 1, Vanity mirror lights
G602	AcuraLink control unit (XM receiver), AcuraLink connector, Fuel fill door opener solenoid, Navigation display unit, Navigation unit, Power rear window sunshade control unit, Rear retractable headrest actuators, TPMS control unit
G603	Fuel pump control module
G604	Rear window defogger condenser
G651	Front passenger's lumbar support switch (2 wires), Front passenger's seat belt buckle switch, Front passenger's seat cushion heater, Front passenger's seat heater switch, Front passenger's power seat adjustment switch, Front passenger's seat ventilation control unit, Front passenger's seat ventilation fan motors, HandsFreeLink control unit, ODS unit, Rear differential, Right rear door ashtray light, Right rear door switch, Right rear door lock knob switch, Right rear power window motor, Right rear power window switch (2 wires)
G652	Active noise cancellation unit, Active noise cancellation microphones, Stereo amplifier, Back-up lights, License plate lights, SH-AWD control unit (3 wires), SH-AWD relay, Trunk lid outer handle switch
G653	E-pretensioner unit (3 wires)
G701	Keyless buzzer, Taillights/brake lights, Trunk lid latch switch (2 wires)
G851	Rear window defogger ground wire
G961	Left rear retractable headrest actuator shielding
G962	Center retractable headrest actuator shielding
G963	Right retractable headrest actuator shielding

Under-hood Fuse/Relay Box

Removal and Installation

Special Tools Required
Relay puller 07AAC-000A1A0

Removal

1. Do the battery terminal disconnection procedure (see page 22-91).

2. Remove the screws (A) for the alternator and battery cable terminals from the under-hood fuse/relay box.

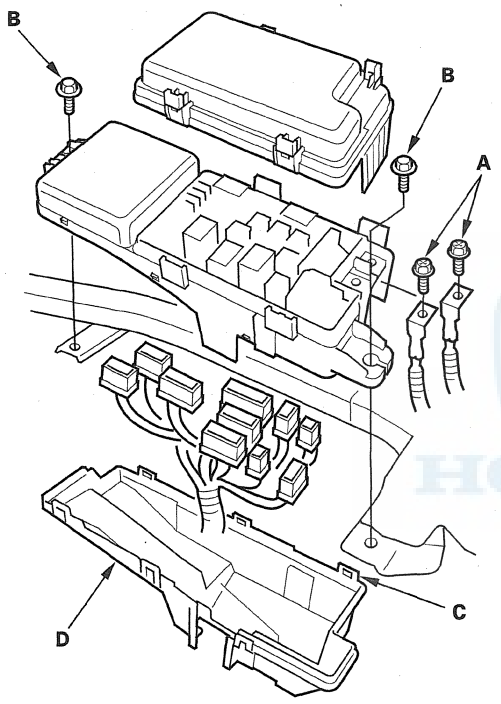

3. Remove the two mounting bolts (B) from the under-hood fuse/relay box.

4. Release the tabs (C), and remove the bottom cover (D) from the under-hood fuse/relay box.

5. Disconnect the connectors from the under-hood fuse/relay box.

6. Carefully remove the relays using the relay puller.

   NOTE: Do not use pliers. Pliers will damage the relays, which could cause the engine to stall or not start.

Installation

1. Install the relays and connect the connectors to the under-hood fuse/relay box, then install the under-hood fuse/relay box in the reverse order of removal.

2. Install the removed parts in the reverse order of removal.

3. Do the battery terminal reconnection procedure (see page 22-91).

4. Confirm that all systems work properly.

DTC Troubleshooting

DTC B1055: Relay Control Module Lost Communication With MICU (MICU Message)

DTC B1056: Relay Control Module Lost Communication With MICU (ALARM Message)

NOTE: If you are troubleshooting multiple DTCs, be sure to follow the instructions in B-CAN System Diagnosis Test Mode A (see page 22-131).

1. Clear the DTCs with the HDS.
2. Turn the ignition switch to LOCK (0) and then back to ON (II).
3. Wait for at least 6 seconds.
4. Check for DTCs with the HDS.

   Is DTC B1055 and/or B1056 indicated?

   YES—Go to step 5.

   NO—Intermittent failure, the system is OK at this time. Check for loose or poor connections between the relay control module and MICU. ■
5. Check for DTCs with the HDS.

   Are DTCs B1157, B1255, B1605, B1806, B2107, and B2155 all indicated?

   YES—Do the MICU input test (see page 22-152). ■

   NO—Do the relay control module input test (see page 22-158). ■

DTC B1060: Relay Control Module Lost Communication With Gauge Control Module (VSP/NE Message)

DTC B1061: Relay Control Module Lost Communication With Gauge Control Module (A/T Message)

NOTE: If you are troubleshooting multiple DTCs, be sure to follow the instructions in B-CAN System Diagnosis Test Mode A (see page 22-131).

1. Clear the DTCs with the HDS.
2. Turn the ignition switch to LOCK (0) and then back to ON (II).
3. Wait for at least 6 seconds.
4. Check for DTCs with the HDS.

   Is DTCs B1060 and/or B1061 indicated?

   YES—Go to step 5.

   NO—Intermittent failure, the system is OK at this time. Check for loose or poor connections between the relay control module and gauge control module. ■
5. Check for DTCs with the HDS.

   Are DTCs B1008, B1011, B1205, B1610, B1805, B1808, B2061, and B2160 all indicated?

   YES—Do the gauge control module input test (see page 22-155). ■

   NO—Do the relay control module input test (see page 22-158). ■

DTC Troubleshooting (cont'd)

DTC B1062: Relay Control Module Lost Communication With Combination Switch Control Unit (HLSW Message)

DTC B1063: Relay Control Module Lost Communication With Combination Switch Control Unit (WIPSW Message)

NOTE: If you are troubleshooting multiple DTCs, be sure to follow the instructions in B-CAN System Diagnosis Test Mode A (see page 22-131).

1. Clear the DTCs with the HDS.
2. Turn the ignition switch to LOCK (0) and then back to ON (II).
3. Wait for at least 6 seconds.
4. Check for DTCs with the HDS.

   Is DTCs B1062 and/or B1063 indicated?

   YES—Go to step 5.

   NO—Intermittent failure, the system is OK at this time. Check for loose or poor connections between the relay control module and combination switch control unit. ■
5. Check for DTCs with the HDS.

   Are DTCs B1007, B1155, B1156, and B2108 all indicated?

   YES—Do the combination switch control unit input test (see page 22-157). ■

   NO—Do the relay control module input test (see page 22-158). ■

DTC B1064: Relay Control Module Lost Communication With Driver's MPCS Unit (DOORSW Message)

DTC B1065: Relay Control Module Lost Communication With Driver's MPCS Unit (DRLOCKSW Message)

NOTE: If you are troubleshooting multiple DTCs, be sure to follow the instructions in B-CAN System Diagnosis Test Mode A (see page 22-131).

1. Clear the DTCs with the HDS.
2. Turn the ignition switch to LOCK (0) and then back to ON (II).
3. Wait for at least 6 seconds.
4. Check for DTCs with the HDS.

   Is DTCs B1064 and/or B1065 indicated?

   YES—Go to step 5.

   NO—Intermittent failure, the system is OK at this time. Check for loose or poor connections between the relay control module and driver's MPCS unit. ■
5. Check for DTCs with the HDS.

   Are DTCs B1014, B1015, B1181, B1182, B1613, B1614, and B1811 all indicated?

   YES—Do the driver's MPCS unit input test (see page 22-159). ■

   NO—Do the relay control module input test (see page 22-158). ■

DTC B1066: Relay Control Module Lost Communication With Keyless Access Control Unit (PANIC Message)

NOTE: If you are troubleshooting multiple DTCs, be sure to follow the instructions in B-CAN System Diagnosis Test Mode A (see page 22-131).

1. Clear the DTCs with the HDS.
2. Turn the ignition switch to LOCK (0) and then back to ON (II).
3. Wait for at least 6 seconds.
4. Check for DTCs with the HDS.

   Is DTC B1066 indicated?

   YES—Go to step 5.

   NO—Intermittent failure, the system is OK at this time. ■
5. Check for DTCs with the HDS.

   Is DTC B1016 also indicated?

   YES—Do the keyless access control unit input test (see page 22-623). ■

   NO—Do the relay control module input test (see page 22-158). ■

Driver's Under-dash Fuse/Relay Box (MICU) Removal/Installation

Special Tools Required
Relay puller 07AAC-000A1A0

SRS components are located in this area. Review the SRS component locations (see page 24-12) and precautions and procedures (see page 24-14) before doing repairs or servicing.

Removal

1. Do the battery terminal disconnection procedure (see page 22-91).
2. Remove the left front door sill trim and left kick panel (see page 20-67).
3. Disconnect the connectors from the fuse side of the driver's under-dash fuse/relay box (A).

   NOTE: If necessary, remove the parking brake pedal assembly to make space.

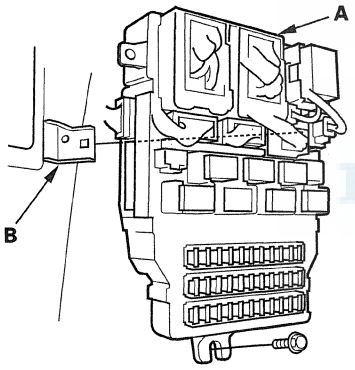

4. Remove the mounting bolt, release the tab (B) and pull the driver's under-dash fuse/relay box away from the body.
5. Disconnect the connectors and remove the driver's under-dash fuse/relay box.
6. Carefully remove the relays using the relay puller.

   NOTE: Do not use pliers. Pliers will damage the relays, which could cause the engine to stall or not start.

Installation

1. Install the relays and connect the connectors to the driver's under-dash fuse/relay box, then install the driver's under-dash fuse/relay box in the reverse order of removal.
2. Install the removed parts in the reverse order of removal.
3. Do the battery terminal reconnection procedure (see page 22-91).
4. Confirm that all systems work properly.

Passenger's Under-dash Fuse/Relay Box Removal/Installation

SRS components are located in this area. Review the SRS component locations (see page 24-12) and precautions and procedures (see page 24-14) before doing repairs or servicing.

Removal

1. Do the battery terminal disconnection procedure (see page 22-91).
2. Remove the right front door sill trim and right kick panel (see page 20-67).
3. Disconnect the connectors from the passenger's under-dash fuse/relay box (A).

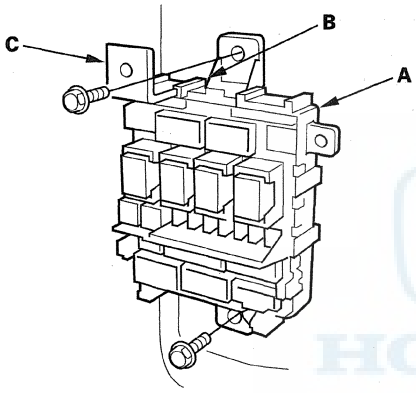

4. Remove the mounting bolts and remove the passenger's under-dash fuse/relay box.
5. Carefully remove the relays using the relay puller, then release the tab (B) and remove the right kick panel mounting bracket (C).

   NOTE: Do not use pliers. Pliers will damage the relays, which could cause the engine to stall or not start.

Installation

1. Install the passenger's under-dash fuse/relay box in the reverse order of removal.
2. Install the relays and connectors to the passenger's under-dash fuse/relay box.
3. Install the removed parts in the reverse order of removal.
4. Do the battery terminal reconnection procedure (see page 22-91).
5. Confirm that all systems work properly.

Battery Test

⚠ WARNING

A battery can explode if you do not follow the proper procedure, causing serious injury to anyone nearby. Follow all procedures carefully and keep sparks and open flames away from the battery.

Required Test Equipment

Honda Electrical system Analyzer (ED-18 Battery tester): T/N INBED18LLH

Ordering Information

To order the Electrical System Analyzer, go to the Honda Tool and Equipment catalog on the iN, or call 888-424-6857.

Software Version

Make sure you have the latest software in the ED-18. To check the version, do this:

- Press the POWER button.
- Select Reports, then press ENTER.
- Select i Version, then press ENTER.

If you do not have the correct version, call the Tools Hotline at 800-346-6327.

Using the ED-18 Battery Tester

NOTE: For set up, customization, and other available features, refer to the ED-18 user's manual.

1. Connect the leads to the positive and negative terminal of the battery.

2. Use the arrow keys to select the battery test, then press Enter and follow the prompts.

   NOTE: Make sure to enter the correct cold cranking ampere rating of the battery. If the number is not entered correctly, the result will not be accurate.

3. Here are the five possible battery conditions:

   - Good Battery:
     The battery has at least 60 percent of its charge and requires no action.
   - Good Recharge:
     The battery condition appears to be good, but charging is recommended and then retest. See your battery charger's instructions to fully charge the battery, then recheck. Do not charge the battery using the vehicle's alternator.
   - Charge and Retest:
     The battery condition is not known because its charge is too low. Recharge the battery, then retest. See your battery's instructions to fully charge the battery, then recheck. Do not charge the battery using the vehicle's alternator.
   - Replace Battery:
     The battery condition is poor. Replace it.
   - Bad Cell:
     There is a problem with the battery. Replace it.

Battery Terminal Disconnection and Reconnection

Disconnection

NOTE: Some systems store data in memory that is lost when the battery is disconnected. Do the following steps before disconnecting the battery.

1. Make sure you have the anti-theft code(s) for the audio and/or the navigation system (if equipped).
2. For some models or if you're replacing the audio unit, it maybe necessary to write down the audio presets (AM and FM), and the XM radio presets (if equipped), because the audio unit does not retain the presets after the battery is disconnected.
3. Make sure the ignition switch is in LOCK (0).
4. Disconnect and isolate the negative cable from the battery.

   NOTE: Always disconnect the negative cable from the battery first.
5. Disconnect the positive cable from the battery.

Reconnection

NOTE: Some systems store data in memory that is lost when the battery is disconnected. Do the following steps to restore the systems back to normal operation.

1. Clean the battery terminals.
2. Test the battery (see page 22-90).
3. Reconnect the positive cable (A) to the battery (B) first, then reconnect the negative cable (C) to the battery.

   NOTE: Always connect the positive cable to the battery first.

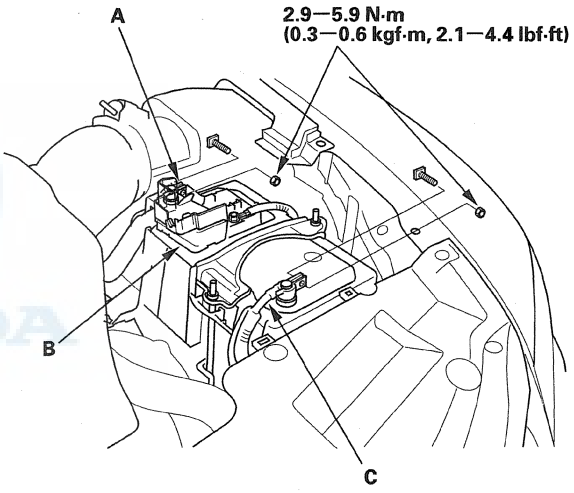

4. Apply multipurpose grease to the terminals to prevent corrosion.
5. Enter the anti-theft code(s) for the audio system and/or the navigation system (if equipped).
6. Enter the audio presets (if applicable), and enter the XM radio presets (if equipped).
7. Set the clock (for vehicles without navigation).
8. Do the steering column position memorization (see page 17-32).

Battery Removal and Installation

NOTE: The battery terminal disconnection/reconnection procedure (see page 22-91) must be done before and after doing this procedure. Some systems store data in memory that is lost when the battery is disconnected.

Removal

1. Do the battery terminal disconnection procedure (see page 22-91).
2. Remove the two nuts (A) securing the battery setting plate, then remove the battery setting plate (B) and the battery (C).

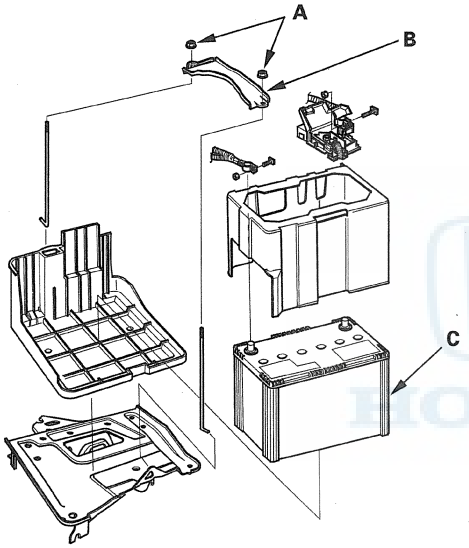

Installation

1. Install the battery (A), then install the battery setting plate (B).

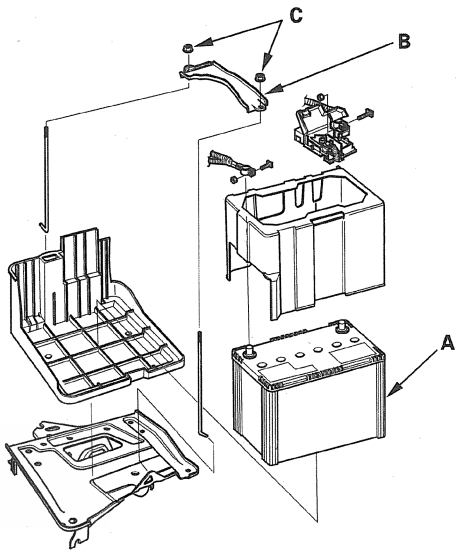

2. Tighten the two nuts (C) equally until the battery is stable.

   NOTE: Do not deform the battery setting plate by over-tightening the nuts.

3. Do the battery terminal reconnection procedure (see page 22-91).

   NOTE: Make sure the battery is installed correctly, and the positive terminal and the negative terminal are not reversed.

Power Relay Test

Special Tools Required
Relay puller 07AAC-000A1A0

Use this chart to identify the type of relay, then do the test listed for it.

NOTE: For the turn signal/hazard relay 1 input test (see page 22-233).

Relay	Test
A/C compressor clutch relay*	Normally-open type
Accessory power socket relay*	
A/F sensor relay*	
Blower motor relay*	
Control motor relay (HVAC)	
Fog light relay*	
Fuel fill door open relay*	
Headlight washer relay* (Canada models)	
Ignition coil relay*	
PGM-FI main relay 1, 2*	
Radiator fan control (RFC) unit relay	
Rear seat heater relay (Canada models)*	
Rear window defogger relay*	
Starter cut relay 1, 2	
Seat heater relay*	
SH-AWD relay*	
Throttle actuator control module relay*	
Windshield wiper motor relay*	
Daytime running lights relay* (Canada models)	Five-terminal type
ACC cut relay*	
IG2 cut relay*	
Adaptive cruise control (ACC) relay*	
Turn signal/hazard relay 2 (sounder)	Turn signal/ hazard relay 2

*: Carefully remove the relay from the fuse/relay box using the relay puller. Do not use pliers. Pliers will damage the relay.

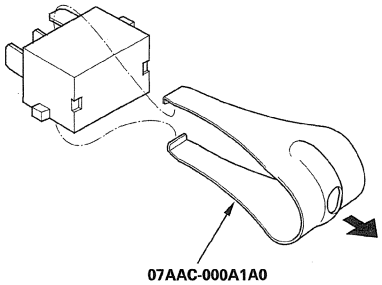

Normally-open Four-terminal Type A

Check for continuity between the terminals.

- There should be continuity between terminals No. 1 and No. 2 when battery positive terminal is connected to terminal No. 4, and battery negative terminal is connected to terminal No. 3.
- There should be no continuity between terminals No. 1 and No. 2 when power is disconnected.

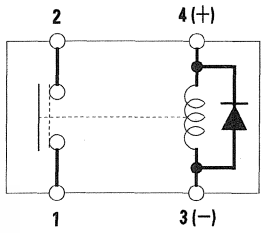

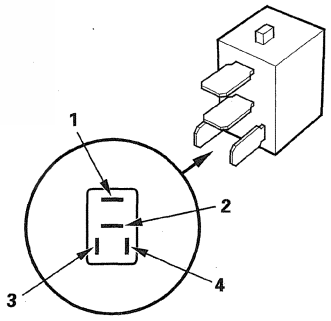

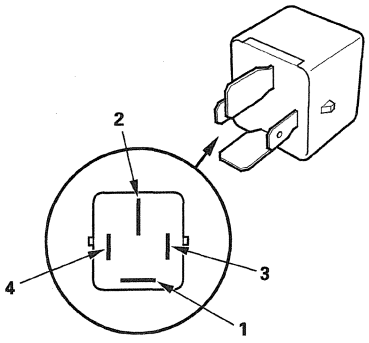

(cont'd)

Power Relay Test (cont'd)

Normally-open Four-terminal Type B

Check for continuity between the terminals.

- There should be continuity between terminals No. 1 and No. 3 when battery positive terminal is connected terminal No. 2, and battery negative terminal connected to terminal No. 4.
- There should be no continuity between terminals No. 1 and No. 3 when power is disconnected.

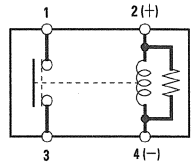

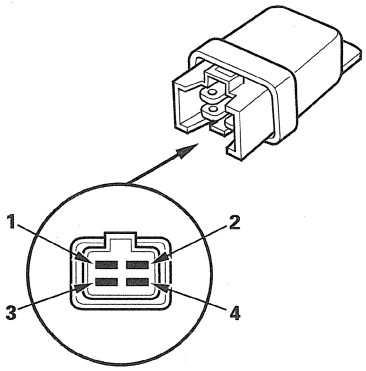

Normally-open Four-terminal Type C

Check for continuity between the terminals.

- There should be continuity between terminals No. 4 and No. 2 when battery positive terminal is connected to terminal No. 3, and battery negative terminal is connected to terminal No. 1.
- There should be no continuity between terminals No. 4 and No. 2 when power is disconnected.

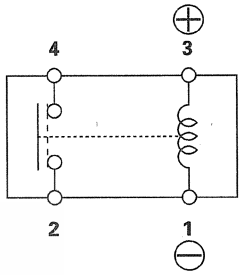

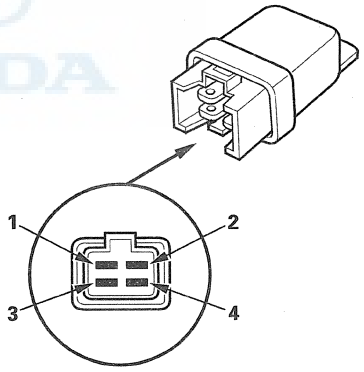

Five-terminal Type B

Check for continuity between the terminals.

- There should be continuity between terminals No. 1 and No. 2 when power is connected to terminal No. 5, and ground to terminal No. 3.
- There should be continuity between terminals No. 1 and No. 4 when power is disconnected.

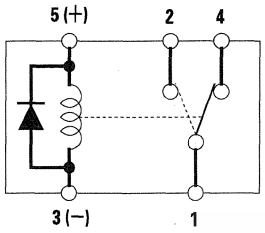

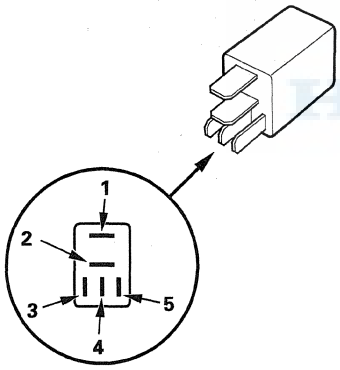

Turn Signal/Hazard Relay 2 (sounder)

Check for a sound from the turn signal/hazard relay 2. The relay should sound once when power and ground are connected to terminals No. 2 and No. 1, and terminals No. 3 and No. 1.

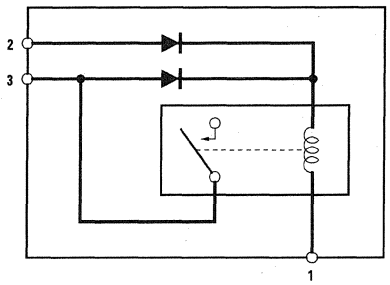

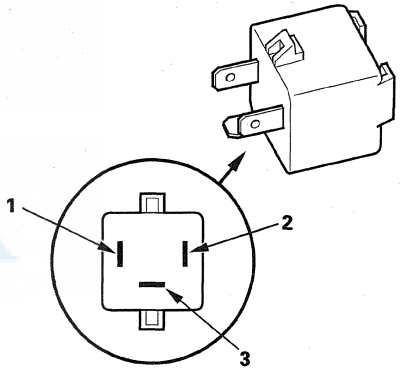

Ignition Switch

Component Location Index

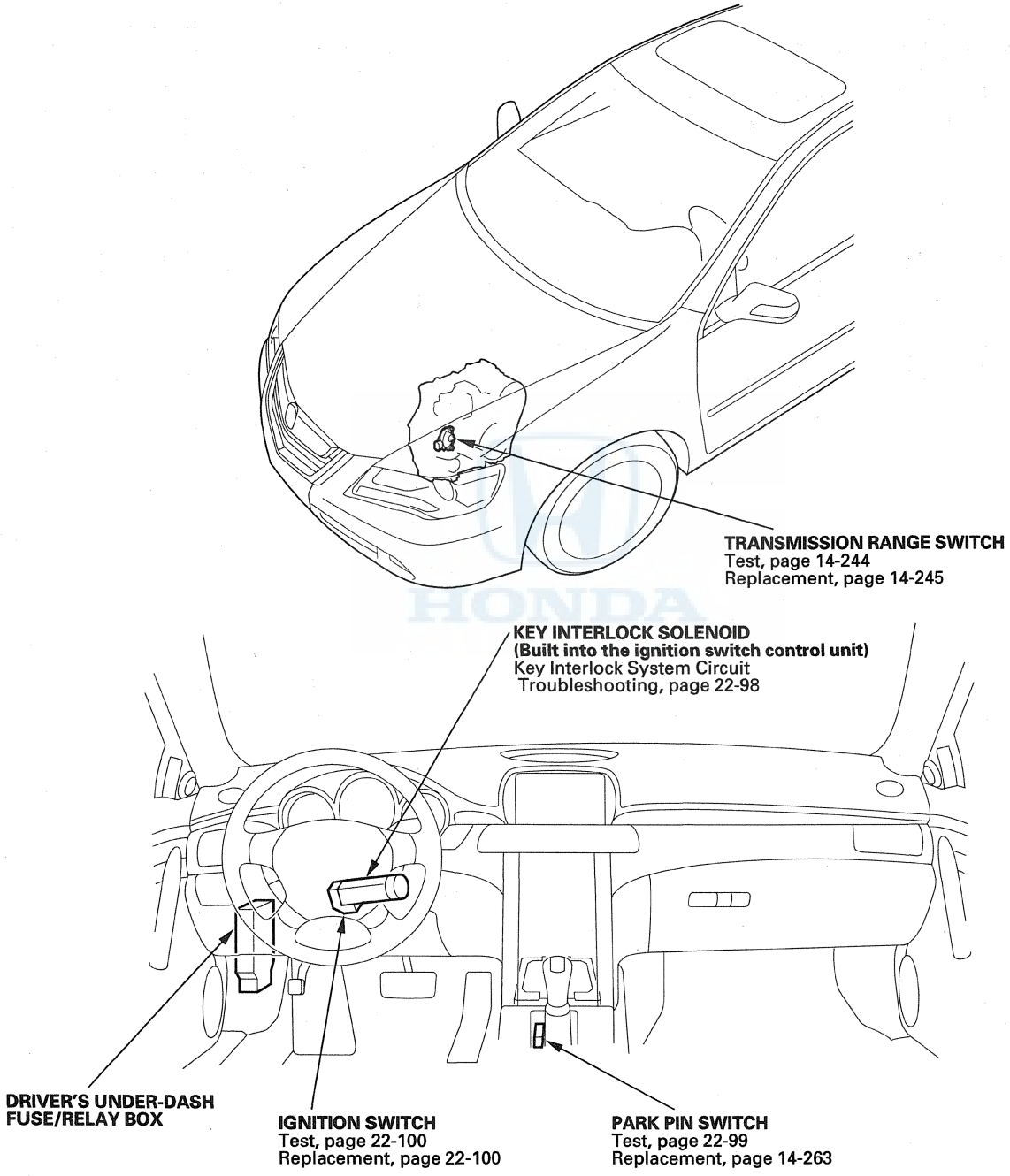

Circuit Diagram

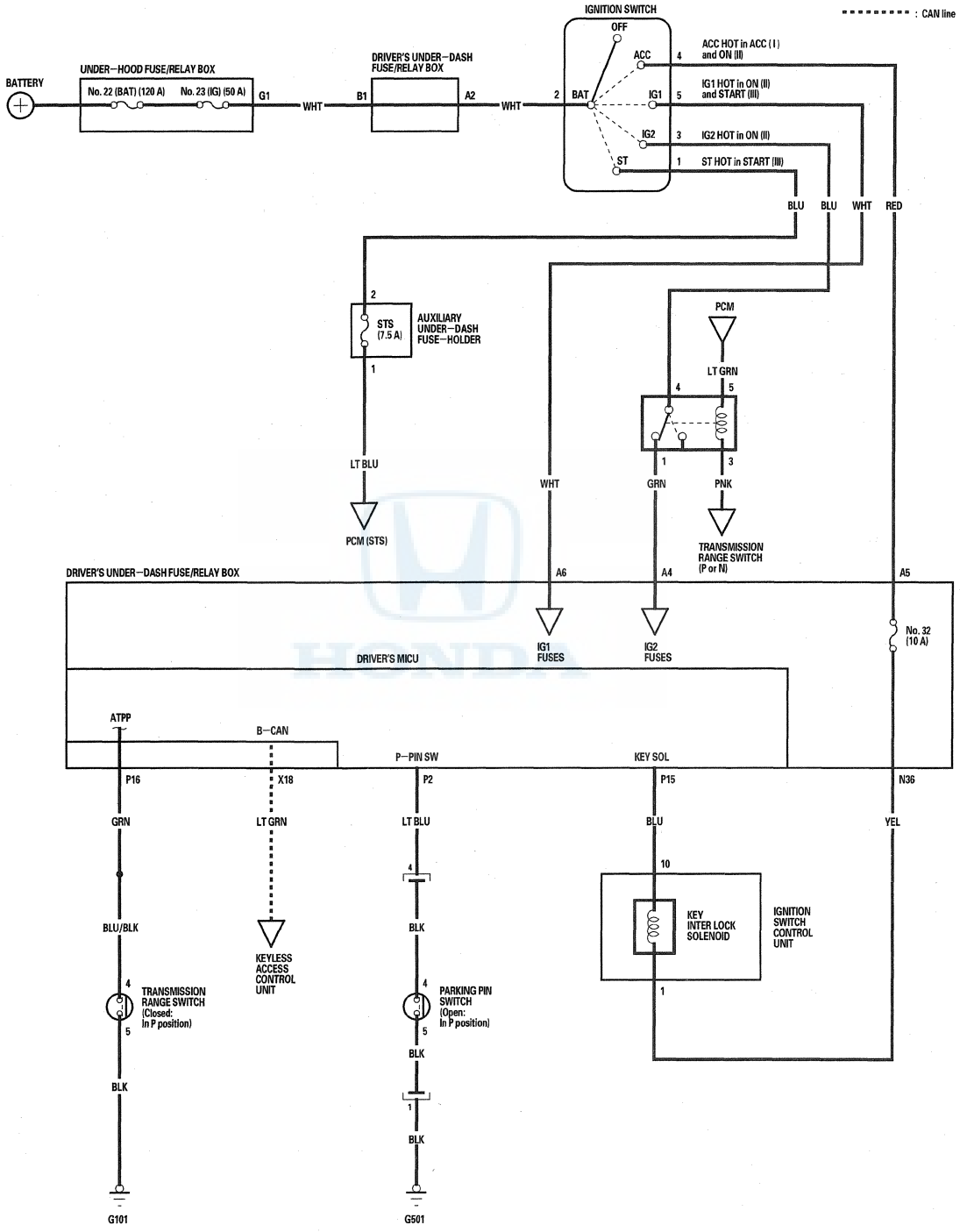

Key Interlock System Circuit Troubleshooting

SRS components are located in this area. Review the SRS component locations (see page 24-12) and the precautions and procedures (see page 24-14) before doing repairs or servicing.

1. Turn the ignition switch to ACC (I). The shift lever must be in P.
2. Disconnect the ignition switch control unit 10P connector.
3. Check if the ignition switch can be turned to LOCK (0).

   Can the ignition switch be turned to LOCK (0)?

   YES—Go to step 4.

   NO—Replace the ignition key cylinder/steering lock assembly (see page 17-33). ■
4. Turn the ignition switch to LOCK (0).
5. Disconnect the driver's under-dash fuse/relay box connector P (30P).
6. Check for continuity between ignition switch control unit connector terminal No. 10 and body ground.

IGNITION SWITCH CONTROL UNIT 10P CONNECTOR

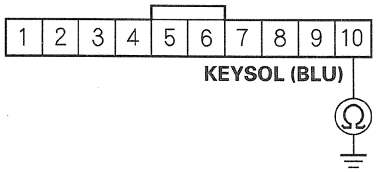

Wire side of female terminals

Is there continuity?

YES—Repair a short in the wire between key interlock solenoid and the MICU. ■

NO—Reconnect the driver's under-dash fuse/relay box connector P (30P) and go to step 7.

7. Connect the HDS to the DLC.
8. Check the Park Pin Switch signal with the HDS in the A/T data list while the shift lever is in P, and when the shift lever is shifted to any position other than P.

   NOTE: If the HDS does not communicate with the PCM, troubleshoot the DLC circuit (see page 11-211).

   Is the park pin switch signal OFF while the shift lever is in P, and ON when the shift lever is shifted out of P?

   YES—Go to step 13.

   NO—Go to step 9.
9. Turn the ignition switch to LOCK (0).
10. Remove the center console (see page 20-92).
11. Disconnect the park pin switch/A/T gear position indicator panel light connector, and remove it from the shift lever bracket.
12. Check for continuity between park pin switch/A/T gear position indicator panel light connector terminal No. 4 and body ground.

PARK PIN SWITCH/ A/T GEAR POSITION INDICATOR PANEL LIGHT CONNECTOR

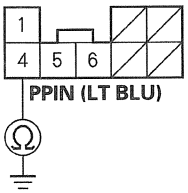

Wire side of female terminals

Is there continuity?

YES—Repair a short in the wire between park pin switch/A/T gear position indicator panel light connector terminal No. 4 and the MICU. ■

NO—Replace the park pin switch (see page 14-263). ■

13. Turn the ignition switch to LOCK (0).

14. Disconnect the driver's under-dash fuse/relay box connector P (30P).

15. Turn the ignition switch to ON (II).

16. Measure the voltage between driver's under-dash fuse/relay box connector P (30P) terminal No. 16 and body ground.

DRIVER'S UNDER-DASH FUSE/RELAY BOX CONNECTOR P (30P)

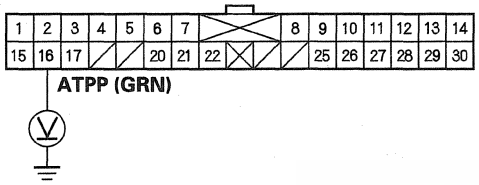

Wire side of female terminals

Is there voltage?

YES—Faulty MICU; replace the driver's under-dash fuse/relay box (see page 22-88). ■

NO—Repair open or short in the ATP P wire between driver's under-dash fuse/relay box connector P (30P) and the transmission range switch. ■

Park Pin Switch Test

1. Connect the HDS to the DLC (A).

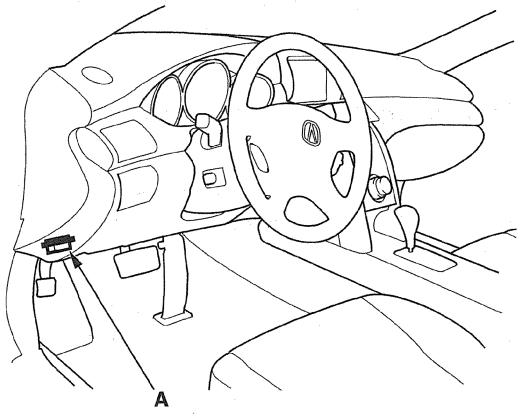

2. Check the Park Pin Switch signal with the HDS in the A/T data list while the shift lever is in P, and when the shift lever is shifted to any position other than P.
The HDS indicates ON while the shift lever is in P, and OFF when the shift lever is out of P. If the park pin switch signal is as specified, the park pin switch circuit is OK. If the park pin switch is not as specified, troubleshoot the key interlock system circuit (see page 22-98).

NOTE: If the HDS does not communicate with the PCM, troubleshoot the DLC circuit (see page 11-211).

Ignition Switch

Ignition Switch Test

SRS components are located in this area. Review the SRS component locations (see page 24-12) and precautions and procedures (see page 24-14) before doing repairs or servicing.

1. Do the battery terminal disconnection procedure (see page 22-91).
2. Remove the driver's dashboard undercover (see page 20-100) and the steering column covers (see page 17-25).
3. Disconnect the 7P connector (A) from the ignition switch (B).

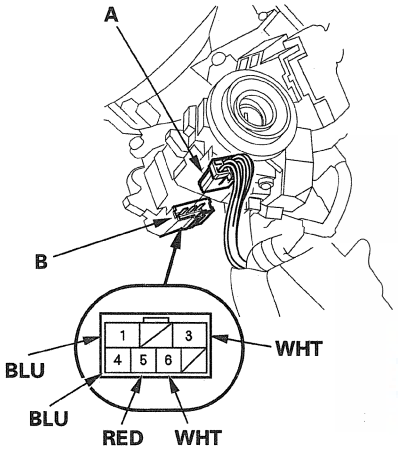

4. Check for continuity between the terminals in each switch position according to the table.

Terminal / Position	RED (ACC)	WHT (BAT)	WHT (IG1)	BLU (IG2)	BLU (ST)
0 (LOCK)					
I (ACC)	○	○			
II (ON)	○	○	○	○	
III (START)		○	○		○

5. If the continuity is not as specified, replace the ignition switch (see page 22-100).
6. Do the battery terminal reconnection procedure (see page 22-91).

Ignition Switch Replacement

SRS components are located in this area. Review the SRS component locations (see page 24-12) and precautions and procedures (see page 24-14) before doing repairs or servicing.

1. Do the battery terminal disconnection procedure (see page 22-91).
2. Remove the driver's dashboard undercover (see page 20-100) and the steering column covers (see page 17-25).
3. Disconnect the 7P connector (A) from the ignition switch (B).

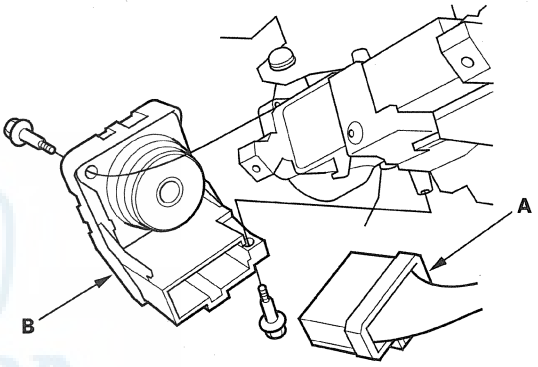

4. Remove the two screws and the ignition switch.
5. Install the ignition switch in the reverse order of removal.
6. Do the battery terminal reconnection procedure (see page 22-91).

HONDA

Component Location Index

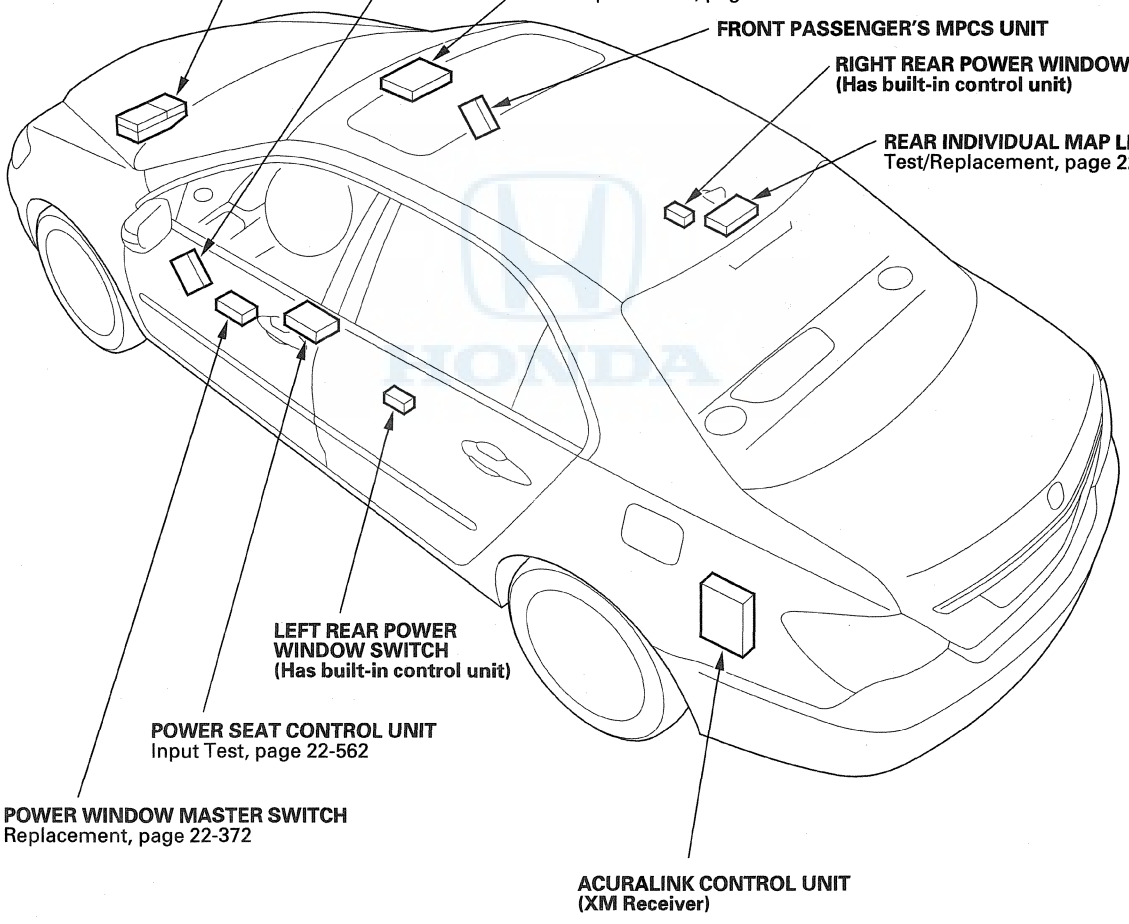

(cont'd)

Component Location Index (cont'd)

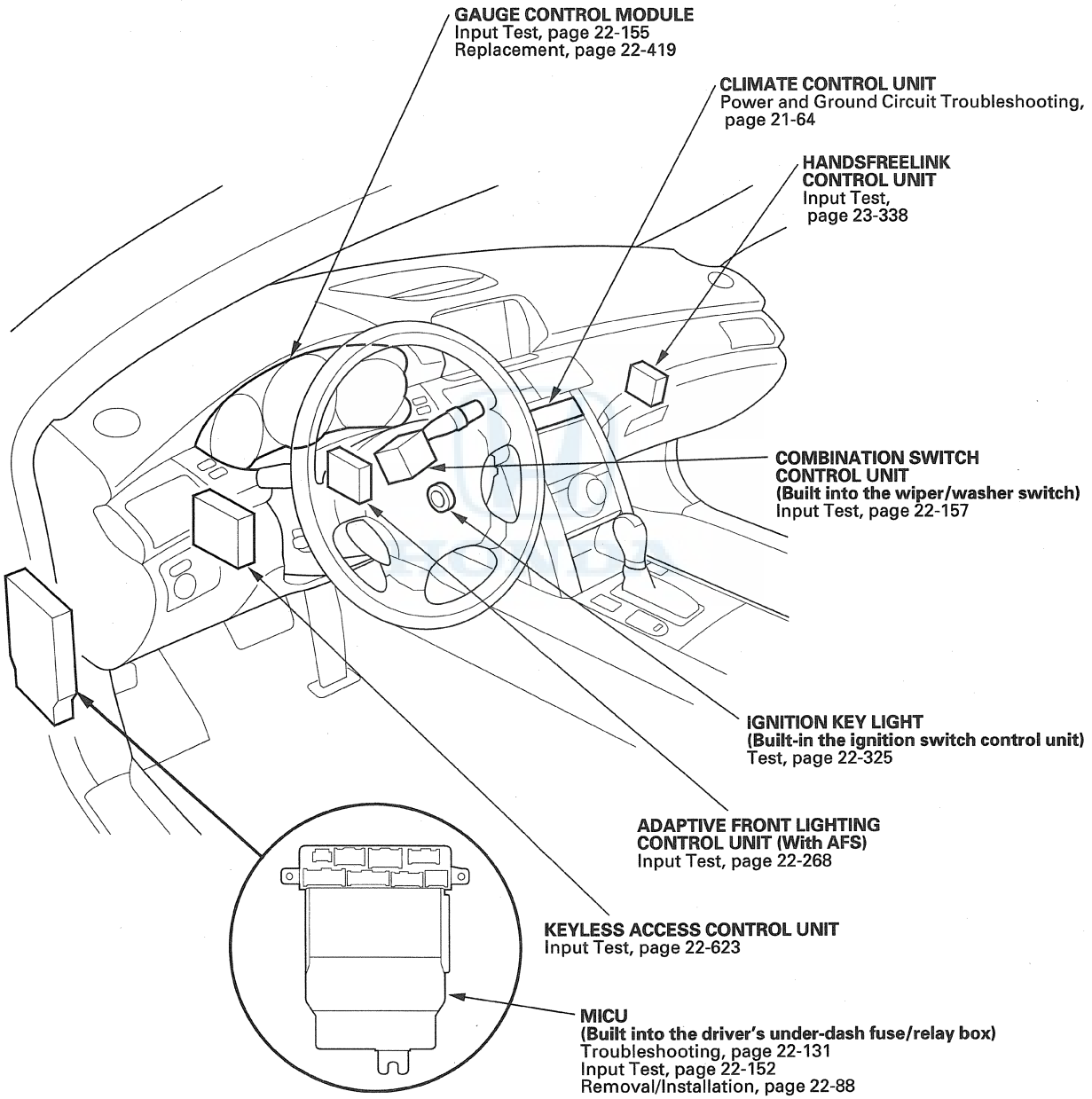

General Troubleshooting Information

Troubleshooting CAN Circuit Related Problems

NOTE: Check the PCM for DTCs and troubleshoot PCM (see page 11-3) or F-CAN loss of communication errors first.

Using the HDS (Preferred method)

1. Connect the HDS to the Data Link Connector (DLC).
2. Read the B-CAN code with the HDS.
   - First method; Go to B-CAN System Diagnosis Test Mode A to check for DTCs (see page 22-131).
   - Second method; Ground the SCS circuit with the HDS, read the DTCs displayed in the multi-information display (MID) in the gauge assembly, then go to B-CAN System Diagnosis Test Mode A (see page 22-131).

Without HDS (Use only if the HDS is unavailable)

1. Check for communication circuit problems using B-CAN System Diagnostic Test Mode A (see page 22-131).
2. Check for DTCs.

   NOTE: If you are troubleshooting multiple DTCs, be sure to follow the instructions in B-CAN System Diagnosis Test Mode A.
3. If no DTCs are retrieved, use B-CAN System Diagnostic Test Mode 2 to check all inputs related to the failure (see step 11 on page 22-136).

HONDA

(cont'd)

General Troubleshooting Information (cont'd)

How to display DTCs on the MID of the gauge control module

Enter B-CAN System Diagnosis Test Mode 1 (see page 22-135). While in Test Mode 1, when the communication between the MICU and the gauge control module is normal. The DTCs which have been detected and stored individually by various B-CAN (body-controller Area Network) units will be shown one by one on the multi-information display. To scroll through the DTCs, press the select/reset button on the steering wheel.



DTC detected (the four digits after the letter "B" represent the DTC)
Control Unit I. D. Number (the two digits after the letters "PA" represent the control unit number)



No DTCs detected

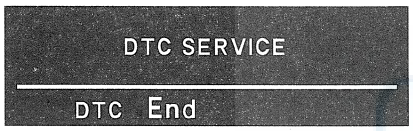

ALL DTCs have been displayed

The unit that has stored the code can be identified by the number shown on the multi-information display (MID).

UNIT	Code (Control Unit I.D. Number)
MICU	10
Relay control module	11
Driver's MPCS unit	30
Gauge control module	50
Climate control unit	51
Combination switch control unit	70
Adaptive front lighting control unit	73
Keyless access control unit	90
HandsFreeLink control unit	94
Power seat control unit	95
AcuraLink control unit (XM receiver)	97

How to clear DTCs

1. Enter B-CAN System Diagnosis Test Mode 1 (see page 22-135).
2. While in Test Mode 1, press and hold down the SEL/RESET button for at least 10 seconds to clear the DTCs.

Loss of Communication DTC Cross-reference Chart

When an ECU on the CAN circuit is unable to communicate with the other ECUs on the B-CAN and F-CAN circuits, the other control units will set loss of communication DTCs. Use this chart to find the control unit that is not communicating with the other control units on the CAN circuit.

1. Find the Transmitting Control Unit that is in the same row as all of the loss of communication DTCs retrieved.
2. Do the input test for the transmitting control unit.

BUS OFF and Internal Error Codes

DTC Type	Related Unit									
	MICU	Relay Control Module	Driver's MPCS Unit	Combination Switch Control Unit	Gauge Control Module	Climate Control Unit	Adaptive Front Lighting Control Unit	Power Seat Control Unit	Keyless Access Control Unit	HandsFree Link Control Unit
BUS OFF	B1000	B1050	B2150	B1250	B1150	B1200	B2100	B1800	B1600	B1750
ECU (CPU) Error	B1001								B1601	
ECU (EEPROM) Error	B1002		B2152		B1152	B1202		B1802	B1602	

Transmitting Control Unit	Message	Receiving Unit/Loss of Communication DTC								
		MICU	Relay Control Module	Driver's MPCS Unit	Combination Switch Control Unit	Gauge Control Module	Climate Control Unit	Adaptive Front Lighting Control Unit	Power Seat Control Unit	Keyless Access Control Unit
MICU	ALARM		B1056							
	MICU		B1055	B2155	B1255	B1157		B2107	B1806	B1605
	ASLOCKSW									
	MIRRORSW			B2156					B1810	
	AUTOLT					B1180				
Relay Control Module	RM	B1005				B1158				
Driver's MPCS Unit	DRLOCKSW	B1015	B1065			B1182				B1614
	DOORSW	B1014	B1064			B1181			B1811	B1613
	ASLOCKSW	B1013								B1615
	MENSW								B1812	
Combination Switch Control Unit	HLSW	B1007	B1062			B1155		B2108		
	WIPSW		B1063			B1156				
Gauge Control Module	VSP/NE	B1011	B1060	B2160			B1205		B1805	B1610
	AT	B1008	B1061					B2106	B1808	
	ENGTEP						B1206			
	ILLUMI			B2157			B1207			
	STEERING							B2105		
Adaptive Front Lighting Control Unit	AFS					B1166				
Keyless Access Control Unit	REMOTE			B2159		B1161				
	PANIC	B1016	B1066							
	REMOTE ID						B1208			
PCM	ENG					B1168				
	AT					B1169				
VSA/TCS	VSA					B1170				
Adaptive Cruise Control (ACC) Unit	ACC					B1171				
TPMS Control Unit	TPMS					B1173				

DTC Troubleshooting Index

NOTE: Record all DTCs and sort them by DTC type using the following DTC troubleshooting indexes, then troubleshoot the DTC(s) in this order:

- Battery voltage DTCs
- Internal error DTCs
- Loss of communication DTCs (beginning with the lowest number first; for example, if DTC B1005 and B1008 are retrieved, troubleshoot B1008 first).
- Signal error DTCs

MICU

DTC	Description	DTC Type	Page
B1000	Communication bus line error (BUS-OFF)	Loss of Communication	(see page 22-142)
B1001	MICU internal (CPU) error	Internal Error	(see page 22-144)
B1002	MICU internal (EEPROM) error	Internal Error	(see page 22-144)
B1005	MICU lost communication with relay control module (RM message)	Loss of Communication	(see page 22-144)
B1007	MICU lost communication with combination switch control unit (HLSW message)	Loss of Communication	(see page 22-145)
B1008	MICU lost communication with gauge control module (A/T message)	Loss of Communication	(see page 22-145)
B1011	MICU lost communication with gauge control module (VSP/NE message)	Loss of Communication	(see page 22-145)
B1013	MICU lost communication with driver's MPCS unit (ASLOCKSW message)	Loss of Communication	(see page 22-146)
B1014	MICU lost communication with driver's MPCS unit (DOORSW message)	Loss of Communication	(see page 22-146)
B1015	MICU lost communication with driver's MPCS unit (DRLOCKSW message)	Loss of Communication	(see page 22-146)
B1016	MICU lost communication with keyless access control unit (PANIC message)	Loss of Communication	(see page 22-146)
B1032	MICU collision detection system (CDS) input error	Signal Error	(see page 22-147)
B1575	Automatic lighting sensor circuit malfunction	Signal Error	(see page 22-212)

Relay Control Module

DTC	Description	DTC Type	Page
B1050	Communication bus line error (BUS-OFF)	Loss of Communication	(see page 22-148)
B1055	Relay control module lost communication with MICU (MICU message)	Loss of Communication	(see page 22-85)
B1056	Relay control module lost communication with MICU (ALARM message)	Loss of Communication	(see page 22-85)
B1060	Relay control module lost communication with gauge control module (VSP/NE message)	Loss of Communication	(see page 22-85)
B1061	Relay control module lost communication with gauge control module (A/T message)	Loss of Communication	(see page 22-85)
B1062	Relay control module lost communication with combination switch control unit (HLSW message)	Loss of Communication	(see page 22-86)
B1063	Relay control module lost communication with combination switch control unit (WIPSW message)	Loss of Communication	(see page 22-86)
B1064	Relay control module lost communication with driver's MPCS unit (DOORSW message)	Loss of Communication	(see page 22-86)
B1065	Relay control module lost communication with driver's MPCS unit (DRLOCKSW message)	Loss of Communication	(see page 22-86)
B1066	Relay control module lost communication with keyless access control unit (PANIC message)	Loss of Communication	(see page 22-87)
B1075	Headlight signal error	Signal Error	(see page 22-204)
B1076	Windshield wiper signal error	Signal Error	(see page 22-377)
B1077	Windshield wiper (As) signal error	Signal Error	(see page 22-379)
B1078	Daytime running lights malfunction (Canada)	Signal Error	(see page 22-206)
B1079	Daytime running lights malfunction (USA)	Signal Error	(see page 22-208)
B1080	Power supply circuit (IG1 line) input error for relay control module and MICU	Signal Error	(see page 22-149)

(cont'd)

DTC Troubleshooting Index (cont'd)

Driver's MPCS Unit (Rear Power Window section)

DTC	Description	DTC Type	Page
B1132	Left rear power window motor pulse A error	Signal Error	(see page 22-336)
B1133	Left rear power window motor pulse B error	Signal Error	(see page 22-338)
B1134	Right rear power window motor pulse A error	Signal Error	(see page 22-340)
B1135	Right rear power window motor pulse B error	Signal Error	(see page 22-342)
B1136	Right rear power window switch internal error	Signal Error	(see page 22-344)
B1147	Left rear power window position information error	Signal Error	(see page 22-344)
B1148	Left rear power window switch internal error	Signal Error	(see page 22-344)
B1149	Right rear power window position information error	Signal Error	(see page 22-344)

Gauge Control Module

DTC	Description	DTC Type	Page
B1150	Communication bus line error (BUS-OFF)	Loss of Communication	(see page 22-148)
B1152	Gauge control module internal (EEPROM) error	Internal Error	(see page 22-406)
B1155	Gauge control module lost communication with combination switch control unit (HLSW message)	Loss of Communication	(see page 22-406)
B1156	Gauge control module lost communication with combination switch control unit (WIPSW message)	Loss of Communication	(see page 22-406)
B1157	Gauge control module lost communication with MICU	Loss of Communication	(see page 22-407)
B1158	Gauge control module lost communication with relay control module (RM message)	Loss of Communication	(see page 22-407)
B1161	Gauge control module lost communication with keyless access control unit (REMOTE ID message)	Loss of Communication	(see page 22-408)
B1166	Gauge control module lost communication with adaptive front lighting control unit (AFS message)	Loss of Communication	(see page 22-408)
B1168	Gauge control module lost communication with PCM (ENG message)	Loss of Communication	(see page 22-409)
B1169	Gauge control module lost communication with PCM (A/T messages)	Loss of Communication	(see page 22-409)
B1170	Gauge control module lost communication with VSA/ABS modulator-control unit (VSA/ABS message)	Loss of Communication	(see page 22-410)
B1171	Gauge control module lost communication with adaptive cruise control (ACC) unit (ACC message)	Loss of Communication	(see page 22-411)
B1173	Gauge control module lost communication with TPMS control unit (TPMS message)	Loss of Communication	(see page 22-412)
B1175	Fuel level sensor (fuel gauge sending unit) circuit open	Signal Error	(see page 22-413)
B1176	Fuel level sensor (fuel gauge sending unit) circuit short	Signal Error	(see page 22-415)
B1177	Battery voltage abnormal	Battery Voltage	(see page 22-416)
B1178	F-CAN communication line error	Loss of Communication	(see page 22-409)
B1180	Gauge control module lost communication with MICU (AUTOLT message)	Loss of Communication	(see page 22-407)
B1181	Gauge control module lost communication with driver's MPCS unit (DOORSW message)	Loss of Communication	(see page 22-417)
B1182	Gauge control module lost communication with driver's MPCS unit (DRLOCKSW message)	Loss of Communication	(see page 22-417)

Climate Control Unit

DTC	Description	DTC type	Page
B1200	Communication bus line (BUS-OFF)	Loss of Communication	(see page 22-148)
B1202	Climate control unit internal error	Loss of Communication	(see page 21-33)
B1205	Climate control unit lost communication with gauge control module (VSP/NE massage)	Loss of Communication	(see page 21-33)
B1206	Climate control unit lost communication with gauge control (ECT message)	Loss of Communication	(see page 21-33)
B1207	Climate control unit lost communication with gauge control module (ILLUMI message)	Loss of Communication	(see page 21-33)
B1208	Climate control unit lost communication with keyless access control unit (REMOTE ID message)	Loss of Communication	(see page 21-33)
B1225	An open in the in-car temperature sensor circuit	Signal Error	(see page 21-34)
B1226	A short in the in-car temperature sensor circuit	Signal Error	(see page 21-35)
B1227	An open in the outside air temperature sensor circuit	Signal Error	(see page 21-37)
B1228	A short in the outside air temperature sensor circuit	Signal Error	(see page 21-38)
B1229	An open in the sunlight sensor circuit	Signal Error	(see page 21-39)
B1230	A short in the sunlight sensor circuit	Signal Error	(see page 21-40)
B1231	An open in the evaporator temperature sensor circuit	Signal Error	(see page 21-41)
B1232	A short in the evaporator temperature sensor circuit	Signal Error	(see page 21-43)
B1235	A problem in the driver's air mix control linkage, door, or motor	Signal Error	(see page 21-44)
B1238	A problem in the passenger's air mix control linkage, door, or motor	Signal Error	(see page 21-44)
B1240	A problem in the mode control linkage, doors, or motor	Signal Error	(see page 21-45)
B1241	A problem in the blower motor circuit	Signal Error	(see page 21-45)
B2975	An open in the driver's vent air temperature sensor circuit	Signal Error	(see page 21-49)
B2976	A short in the driver's vent air temperature sensor circuit	Signal Error	(see page 21-50)
B2977	An open in the passenger's vent air temperature sensor circuit	Signal Error	(see page 21-51)
B2978	A short in the passenger's vent air temperature sensor circuit	Signal Error	(see page 21-53)
B2979	An open in the A/C pressure sensor circuit	Signal Error	(see page 21-54)
B2980	A short in the A/C pressure sensor circuit	Signal Error	(see page 21-55)
B2981	Climate control unit lost communication with navigation unit	Loss of Communication	(see page 21-56)
B2982	Climate control unit lost communication with each control motor	Loss of Communication	(see page 21-57)
B2983	A problem in the recirculation control linkage, doors, or motor	Signal Error	(see page 21-58)
B2984	A problem in the driver's cool vent control linkage, doors, or motor	Signal Error	(see page 21-58)
B2985	A problem in the passenger's cool vent control linkage, door, or motor	Signal Error	(see page 21-59)
B2987	A problem in the rear vent control linkage, doors, or motor	Signal Error	(see page 21-59)
B2991	Climate control unit lost communication with audio unit	Loss of Communication	(see page 21-60)

(cont'd)

DTC Troubleshooting Index (cont'd)

Combination Switch Control Unit

DTC	Description	DTC Type	Page
B1250	Communication bus line error (BUS-OFF)	Loss of Communication	(see page 22-148)
B1255	Combination switch control unit lost communication with MICU	Loss of Communication	(see page 22-210)
B1275	Combination light switch OFF position circuit malfunction	Signal Error	(see page 22-210)
B1276	Combination light switch parking (SMALL) position circuit malfunction	Signal Error	(see page 22-210)
B1277	Headlight switch AUTO position circuit malfunction	Signal Error	(see page 22-210)
B1278	Headlight switch ON position circuit malfunction	Signal Error	(see page 22-210)
B1279	Headlight switch DIMMER position circuit malfunction	Signal Error	(see page 22-211)
B1280	Turn signal switch circuit malfunction	Signal Error	(see page 22-232)
B1281	Windshield wiper switch MIST position circuit malfunction	Signal Error	(see page 22-381)
B1282	Windshield wiper switch INT (AUTO) position circuit malfunction	Signal Error	(see page 22-381)
B1283	Windshield wiper switch LOW position circuit malfunction	Signal Error	(see page 22-381)
B1284	Windshield wiper switch HIGH position circuit malfunction	Signal Error	(see page 22-381)

Keyless Access Control Unit

DTC	Description	DTC Type	Page
B1600	Communication bus line error (BUS-OFF)	Loss of Communication	(see page 22-148)
B1601	Keyless access control unit internal (CPU) error	Internal Error	(see page 22-582)
B1602	Keyless access control unit internal (EEPROM) error	Internal Error	(see page 22-582)
B1605	Keyless access control unit lost communication with MICU (MICU message)	Loss of Communication	(see page 22-582)
B1610	Keyless access control unit lost communication with gauge control module (VSP/NE message)	Loss of Communication	(see page 22-583)
B1613	Keyless access control unit lost communication with driver's MPCS unit (DOORSW message)	Loss of Communication	(see page 22-583)
B1614	Keyless access control unit lost communication with driver's MPCS unit (DRLOCKSW message)	Loss of Communication	(see page 22-583)
B1615	Keyless access control unit lost communication with driver's MPCS unit (ASLOCKSW message)	Loss of Communication	(see page 22-583)
B1626	Ignition switch control unit no response	Signal Error	(see page 22-584)
B1627	RF Unit 1 not connected	Signal Error	(see page 22-587)
B1628	RF Unit 2 not connected	Signal Error	(see page 22-589)
B1640	RF Unit 1 circuit malfunction	Signal Error	(see page 22-587)
B1641	RF Unit 2 circuit malfunction	Signal Error	(see page 22-589)
B1645	Driver's door LF antenna circuit short	Signal Error	(see page 22-591)
B1646	Driver's door LF antenna circuit open	Signal Error	(see page 22-592)
B1647	Passenger's door LF antenna circuit short	Signal Error	(see page 22-593)
B1648	Passenger's door LF antenna circuit open	Signal Error	(see page 22-594)
B1657	Rear bumper LF antenna circuit short	Signal Error	(see page 22-595)
B1658	Rear bumper LF antenna circuit open	Signal Error	(see page 22-596)
B1659	Front interior LF antenna circuit short	Signal Error	(see page 22-597)
B1660	Front interior LF antenna circuit open	Signal Error	(see page 22-598)
B1663	Rear interior LF antenna circuit short	Signal Error	(see page 22-599)
B1664	Rear interior LF antenna circuit open	Signal Error	(see page 22-600)
B1667	Rear shelf LF antenna circuit short	Signal Error	(see page 22-601)
B1668	Rear shelf LF antenna circuit open	Signal Error	(see page 22-602)
B1671	Ignition switch control unit (Key SW) circuit open	Signal Error	(see page 22-603)
B1672	Ignition switch control unit (KNOB SW) circuit short	Signal Error	(see page 22-604)
B1673	Ignition switch control unit (KNOB SW) circuit open	Signal Error	(see page 22-605)
B1674	Ignition switch control unit (ROTATE SW) circuit short	Signal Error	(see page 22-606)
B1675	Ignition switch control unit (ROTATE SW) circuit open	Signal Error	(see page 22-607)

(cont'd)

DTC Troubleshooting Index (cont'd)

HandsFreeLink Control Unit

DTC	Description	DTC Type	Page
B1750	Communication bus line error (BUS-OFF)	Loss of Communication	(see page 22-148)
B1775	Microphone input/output short to power/open	Signal Error	(see page 23-314)
B1776	Microphone input/output short to ground/open	Signal Error	(see page 23-315)
B1779	HFL switch or HFL-voice control switch (HFL talk/ HFL back buttons) circuit open/short	Signal Error	(see page 23-318)
B1780	HFL-voice control switch (HFL talk/HFL back buttons) circuit short	Signal Error	(see page 23-320)
B1792	HandsFreeLink control unit internal error	Internal Error	(see page 23-321)

Power Seat Control Unit

DTC	Description	DTC Type	Page
B1800	Communication bus line error (BUS-OFF)	Loss of Communication	(see page 22-148)
B1802	Power seat control unit internal (EEPROM) error	Loss of Communication	(see page 22-519)
B1805	Power seat control unit lost communication with gauge control module (VSP/NE message)	Loss of Communication	(see page 22-519)
B1806	Power seat control unit lost communication with MICU	Loss of Communication	(see page 22-520)
B1808	Power seat control unit lost communication with gauge control module (A/T message)	Loss of Communication	(see page 22-519)
B1810	Power seat control unit lost communication with MICU (MIRRORSW message)	Loss of Communication	(see page 22-520)
B1811	Power seat control unit lost communication with driver's MPCS unit (DOORSW message)	Loss of Communication	(see page 22-520)
B1812	Power seat control unit lost communication with driver's MPCS unit (MEMSW message)	Loss of Communication	(see page 22-520)
B1825	Power seat slide motor pulse error	Signal Error	(see page 22-521)
B1826	Power seat front up-down motor pulse error	Signal Error	(see page 22-524)
B1827	Power seat rear up-down motor pulse error	Signal Error	(see page 22-527)
B1828	Power seat recline motor pulse error	Signal Error	(see page 22-530)
B1829	A/T P signal and VSS signal mismatch	Signal Error	(see page 22-533)
B1835	Tilt/telescopic switch signal input error	Signal Error	(see page 22-533)
B1836	Power seat position sensor circuit short	Signal Error	(see page 22-535)
B1837	Driving position memory recall timeout	Signal Error	(see page 22-536)
B1840	Tilt motor pulse error	Signal Error	(see page 22-537)
B1841	Telescopic motor pulse error	Signal Error	(see page 22-540)
B1842	Power tilt/telescopic position sensor power supply circuit (SVCC line) short	Signal Error	(see page 22-543)
B1843	Power seat control unit lost communication with power tilt/telescopic steering control unit (UART line)	Loss of Communication	(see page 22-544)
B1844	Power seat slide switch circuit malfunction	Signal Error	(see page 22-546)
B1845	Power seat recline switch circuit malfunction	Signal Error	(see page 22-547)
B1846	Power seat front up-down switch circuit malfunction	Signal Error	(see page 22-548)
B1847	Power seat rear up-down switch circuit malfunction	Signal Error	(see page 22-549)
B1848	Rear headrest switch signal error	Signal Error	(see page 22-492)

Adaptive Front Lighting Control Unit

DTC	Description	DTC Type	Page
B2100	Communication bus line error (BUS-OFF)	Signal Error	(see page 22-148)
B2105	AFS control unit lost communication with gauge control module (STEERING message)	Loss of Communication	(see page 22-242)
B2106	AFS control unit lost communication with gauge control module (A/T message)	Loss of Communication	(see page 22-242)
B2107	AFS control unit lost communication with MICU (MICU message)	Loss of Communication	(see page 22-243)
B2108	AFS control unit lost communication with combination switch control unit (HLSW message)	Loss of Communication	(see page 22-243)
B2127	Steering angle sensor malfunction	Signal Error	(see page 22-244)
B2131	Steering angle sensor MAX error	Signal Error	(see page 22-244)
B2135	A/T reverse signal error	Signal Error	(see page 22-245)
B2136	Left AFS gearbox motor signal error	Signal Error	(see page 22-246)
B2137	Right AFS gearbox motor signal error	Signal Error	(see page 22-247)
B2139	Headlight leveling motor power supply circuit error	Signal Error	(see page 22-248)
B2140	Headlight leveling motor signal circuit error	Signal Error	(see page 22-250)
B2141	Suspension stroke sensor output error	Signal Error	(see page 22-251)
B2142	AFS control unit sub CPU communication error	Internal Error	(see page 22-255)
B2143	AFS control unit sub CPU memory error	Internal Error	(see page 22-255)
B2144	AFS control unit sub CPU EEPROM error	Internal Error	(see page 22-255)
B2145	Left AFS gearbox motor swing error	Signal Error	(see page 22-256)
B2146	Right AFS gearbox motor swing error	Signal Error	(see page 22-260)

HONDA

(cont'd)

DTC Troubleshooting Index (cont'd)

Driver's MPCS Unit

DTC	Description	DTC type	Page
B2150	Communication bus line error (BUS-OFF)	Loss of Communication	(see page 22-148)
B2152	Driver's MPCS unit internal (EEPROM) error	Internal Error	(see page 22-150)
B2155	Driver's MPCS unit lost communication with MICU (MICU message)	Loss of Communication	(see page 22-150)
B2156	Driver's MPCS unit lost communication with MICU (MIRRORSW message)	Loss of Communication	(see page 22-150)
B2157	Driver's MPCS unit lost communication with gauge control module (ILLUMI message)	Loss of Communication	(see page 22-151)
B2159	Driver's MPCS unit lost communication with keyless access control unit (REMOTE message)	Loss of Communication	(see page 22-151)
B2160	Driver's MPCS unit lost communication with gauge control module (VSP/NE message)	Loss of Communication	(see page 22-151)
B2175	Driver's power window motor pulse A error	Signal Error	(see page 22-346)
B2176	Driver's power window motor pulse B error	Signal Error	(see page 22-348)
B2177	Front passenger's power window motor pulse A error	Signal Error	(see page 22-350)
B2178	Front passenger's power window motor pulse B error	Signal Error	(see page 22-352)
B2179	Driver's door key cylinder switch input circuit malfunction	Signal Error	(see page 22-171)
B2180	Driver's door lock switch input circuit malfunction	Signal Error	(see page 22-172)
B2181	Driver's door lock knob switch input circuit malfunction	Signal Error	(see page 22-173)
B2182	Left power mirror horizontal sensor signal error	Signal Error	(see page 22-550)
B2183	Left power mirror vertical sensor signal error	Signal Error	(see page 22-551)
B2184	Right power mirror horizontal sensor signal error	Signal Error	(see page 22-553)
B2185	Right power mirror vertical sensor signal error	Signal Error	(see page 22-554)
B2186	Front passenger's door lock switch input circuit malfunction	Signal Error	(see page 22-174)
B2187	Communication line (UART line) circuit short	Signal Error	(see page 22-354)
B2188	Communication line (UART line) circuit open	Signal Error	(see page 22-356)
B2189	Driver's power window position detect error	Signal Error	(see page 22-358)
B2190	Front passenger's power window position detect error	Signal Error	(see page 22-359)
B2191	Front passenger's MPCS unit internal (EEPROM) error	Internal Error	(see page 22-360)

AcuraLink Control Unit

DTC	Description	DTC type	Page
B2200	Communication bus line error	Loss of Communication	(see page 22-148)
B2204	B-CAN communication line error	Loss of Communication	(see page 23-283)
B2206	SRS unit lost communication with AcuraLink control unit (XM receiver)	Loss of Communication	(see page 23-284)
B2211	F-CAN communication line error with PCM	Loss of Communication	(see page 23-285)
B2212	Gauge control module lost F-CAN communication with AcuraLink control unit (XM receiver)	Loss of Communication	(see page 23-286)
B2240	XM antenna error	Internal error	(see page 23-287)

System Description

Body Controller Area Network (B-CAN) and Fast Controller Area Network (F-CAN)

The fast controller area network (F-CAN) and the body controller area network (B-CAN) share information between multiple electronic control units (ECUs). B-CAN communication moves at a slower speed for convenience related items and for other functions. F-CAN information moves at a faster speed for "real time" functions such as fuel and emissions data. To allow both systems to share information, the gauge control module translates and relays the information from the B-CAN to the F-CAN and from the F-CAN to the B-CAN. This is called the Gateway Function.

The ECUs on the B-CAN and the F-CAN transmit and receive information in the form of structured messages that may be received by several different ECUs on the network at one time. These messages are transmitted and received across a communication circuit that consists of a single wire that is shared by all the ECUs on the circuit. Since messages on the F-CAN are typically of higher importance, a second wire is used for communication circuit integrity monitoring. A backup circuit is also added to the headlight and wiper circuits on the B-CAN in the event of a network wire or ECU failure that would effect the operation of the system.

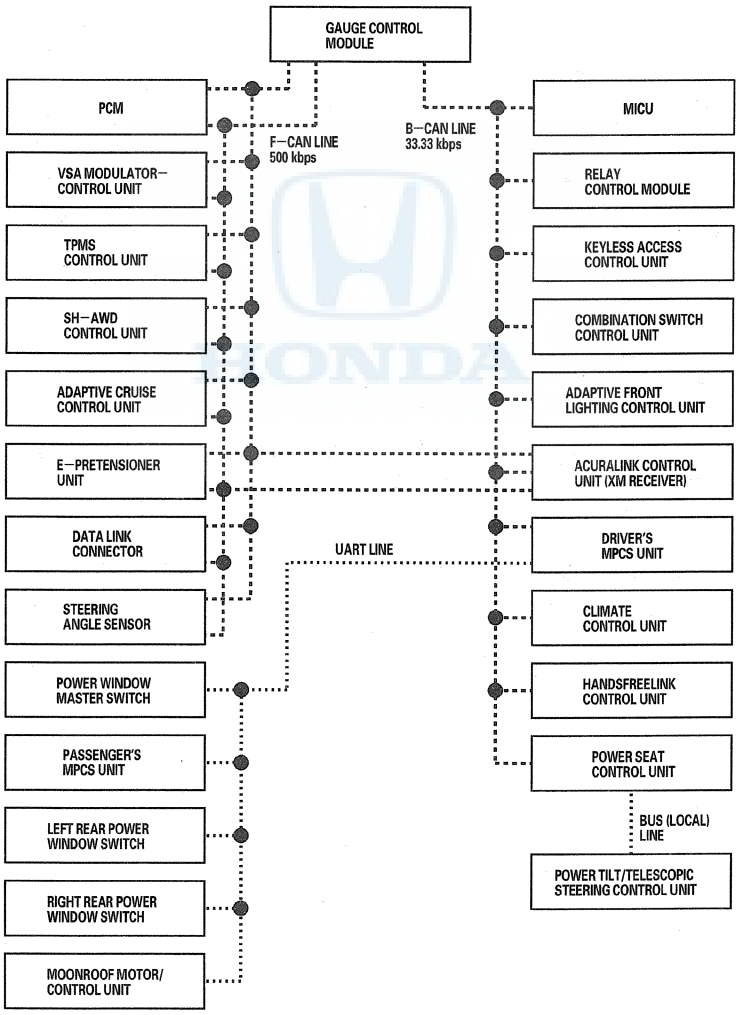

(cont'd)

System Description (cont'd)

Messages are transmitted by an ECU (that monitors an input) over the communication circuit. ECUs that use the message (information related to that input) are the receivers. For example, the combination switch control unit monitors the wiper switch. When the wiper switch is placed in the low speed position, the combination switch control unit transmits that message on the communication circuit. The relay control module receives the message and turns on the wipers by providing a ground for the relay.

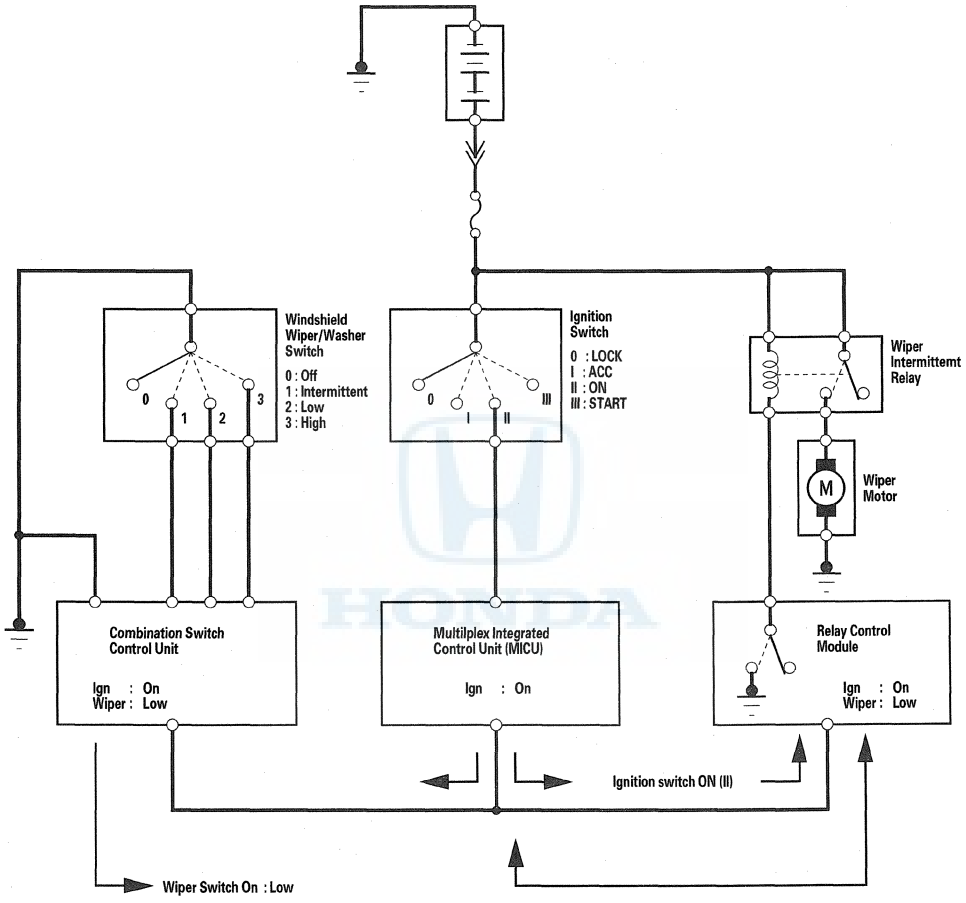

Connected ECUs

Several ECUs are connected to each of the two networks. The gauge control module is part of both networks since it is the "gateway" between them. Here is a list of ECUs and the network they are connected to.

B-CAN ECUs

- Gauge control module
- Relay control module
- MICU
- Driver's MPCS unit
- Combination switch control unit
- Climate control unit
- HandsFreeLink control unit
- Power seat control unit
- Adaptive front lighting control unit
- Keyless access control unit
- AcuraLink control unit (XM receiver)

F-CAN ECUs

- Gauge control module
- PCM
- VSA modulator-control unit
- TPMS control unit
- SH-AWD control unit
- Adaptive cruise control unit
- E-pretensioner unit
- Data link connector

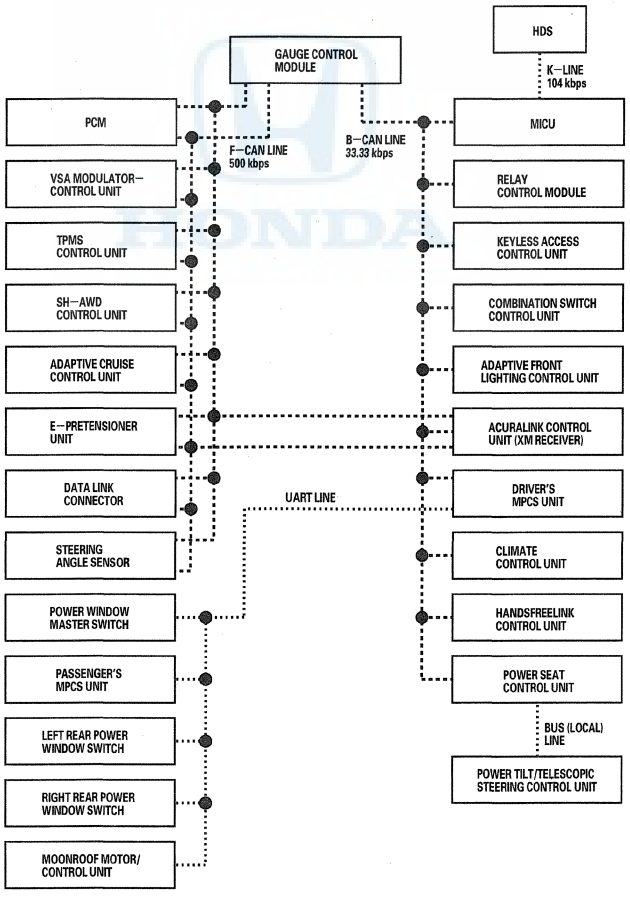

(cont'd)

System Description (cont'd)

Network "Loss of Communication" Error Checking

The B-CAN and the F-CAN send messages to each other to check the integrity of the network communication circuit. They do this by sending a specific digital message out after an event. For example, after turning the ignition switch to ON (II), all the ECUs on the communication circuit expect to receive a message from other specific units within a specified amount of time. If the message is not received, the ECU will transmit a DTC reporting that it did not receive the message.

Examples of a communication circuit test

Normal circuit

1. Turn the ignition switch to ON (II).
2. The driver's MPCS unit transmits a door lock switch message.
3. The MICU, relay control module, gauge control module, and keyless access control unit receive the door lock switch message.
4. The communication circuit test is passed.

Since the door lock switch message was received by all the ECUs expecting to receive a message, the communication circuit between those units is OK. There are multiple messages sent and received by each ECU during this time to insure that the communication circuit is intact.

Failed circuit

5. Turn the ignition switch to ON (II).
6. The driver's MPCS unit transmits a door lock switch message.
7. The MICU, relay control module, gauge control module, and keyless access control unit expect to receive the door lock switch message, but since there is a break in the communication circuits, it is not received.

8. Each ECU that expects to receive the door lock switch message from the driver's MPCS unit will transmit DTCs for the message that it did not receive.

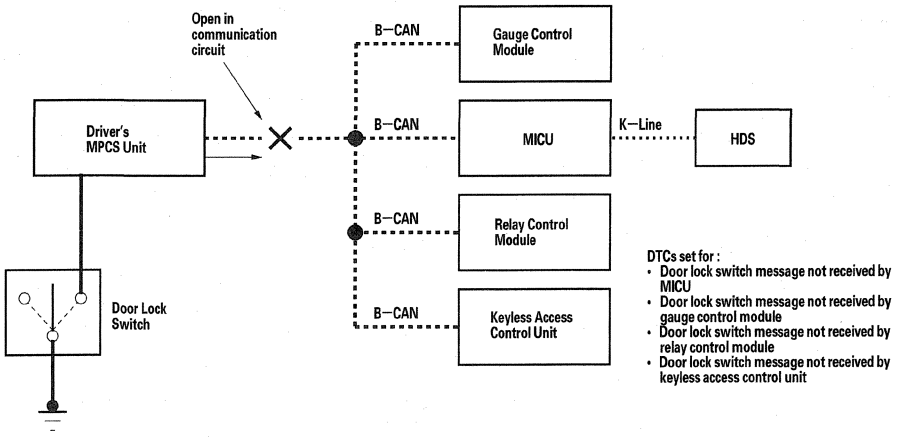

Since there is a break in the communication circuit, the door lock switch message could not be received by the MICU, the relay control module, the gauge control module, or the keyless access control unit. Each of these units will set "loss of communication" error codes for the message(s) they did not receive. There may be multiple communication DTCs if the unit that has become disconnected from the network would normally transmit multiple messages during the communication line test. For example, the driver's MPCS unit sends the door switch message and door lock switch message during the communication circuit test.

Diagnostic Trouble Codes (DTC)

There are three types of DTCs used by the CAN networks.

Internal error DTCs	The ECUs run internal checks. If one finds that there is an internal ECU problem, it will set an internal error DTC. Confirm that the battery and charging system are OK. If so, this indicates that the ECU needs to be replaced.
Loss of communication DTCs	Loss of communication DTCs (and Bus-off DTCs) are set when there is a problem with the communication between ECUs. This could be in the connections, the wiring, or the ECU (as called out in the DTC Troubleshooting).
Signal error DTCs	The ECUs can run diagnostics on some input circuits to determine if those circuits are functioning properly (no opens or shorts). If a circuit fails the diagnostic test, a DTC will set. (NOTE: Not all input circuits are tested for errors.)

(cont'd)

System Description (cont'd)

B-CAN System Unit Input/Output Index

MICU	
Input signal	**Output signal/Device**
Audio switch, Automatic lighting sensor (SIO signal), Brake pedal position switch, CDS signal, Hazard warning switch, Ignition key switch, Park-pin switch, Power mirror switch (up, down, left, right), Seat belt buckle switch (unbuckled), Transmission range switch (P, R), Trunk lid latch switch, Trunk lid opener main switch, Trunk lid outer handle switch	Automatic lighting sensor (SIP signal), Daytime running lights, Door and trunk lid lock actuators, Fuel fill door opener solenoid, Floor lights, Footwell lights, Hazard warning lights, Interior lights, Ignition key light, Key interlock solenoid, Keyless buzzer, Map lights, Turn signal lights, Trunk lid opener solenoid

Relay Control Module	
Input signal	**Output signal/Device**
Daytime running lights control, Security hood switch, Horn switch, Windshield wiper motor, Windshield wiper fail-safe, Rear window defogger	Daytime running lights control, Headlight, Parking light, Horns, Windshield washer motor, Windshield wiper motor

Combination Switch Control Unit	
Input signal	**Output signal/Device**
Dimmer switch, Lighting switch, Passing switch, Turn signal switch, Wiper/washer switch, Intermittent dwell time controller	None

Driver's MPCS Unit	
Input signal	**Output signal**
Driving position memory switch, Driver's door switch, Driver's door key cylinder switch (lock/unlock), Driver's door lock knob switch (lock/unlock), Driver's door lock switch, Driver's power window motor pulses (A and B), Fuel fill door opener switch, Key-off timer, Left power mirror position sensors (horizontal and vertical), Left rear door lock knob switch (unlock), Power window master switch (up switch), Trunk lid opener switch	Driving position memory switch indicators and light (LED), Driver's door courtesy light, Driver's door inner handle light, Driver's outer handle light, Driver's door pocket light, Driver's power window motor pulser (SVCC), Left power mirror actuator (up/down, left/right, heat, common), Trunk lid/fuel fill door opener switch light

Front Passenger's MPCS Unit (UART)	
Input signal	**Output signal/Device**
Front passenger's door switch, Front passenger's door lock knob switch (lock/unlock), Front passenger's door lock switch, Front passenger's power window switch (auto, up, down), Front passenger's power window motor pulses (A and B), Right power mirror position sensor (horizontal and vertical), Right rear door lock knob switch (unlock)	Front passenger's door courtesy light, Front passenger's door inner handle light, Front Passenger's outer handle light, Front passenger's door pocket light, Front passenger's power window motor pulser (SVCC), Right power mirror actuator (up/down, left/right, heat, common), Driving position memory switch indicators and light (LED)

Adaptive Front Lighting Control Unit	
Input signal	**Output signal/Device**
AFS OFF switch, Rear wheel speed sensors, Suspension stroke sensor, Steering angle sensor	Headlight leveling motors, Adaptive front lighting gearboxes

B-CAN System Unit Input/Output Index

Gauge Control Module	
Input signal	**Output signal/Device**
Dash lights brightness controller, Daytime running lights signal, Oil pressure switch signal, Washer fluid level switch signal (Canada models), Parking brake switch, Brake fluid level switch, Fuel gauge sending unit, Select/Reset/Information switch, Cruise control combination switch (set, cancel, resume, master), VSA OFF switch, A/T park position, MET INH from PCM	Dash lights, Fuel gauge, Gauge lights, Indicator, LEDs, Speedometer, Tachometer, ECT gauge, Warning buzzer, Odometer/Outside air temperature display

Climate Control Unit	
Input signal	**Output signal/Device**
Evaporator temperature sensor, In-car temperature sensor, Outside air temperature sensor, Sunlight sensor, Air mix motor position (Driver's and Passenger's), Mode motors position, Blower motor control feedback	Air mix control motors (Driver's/Passenger's), Blower motor transistor, Mode control motors, Recirculation motor

Power Seat Control Unit	
Input signal	**Output signal/Device**
Driver's power seat adjustment switch signal, Memory sensors	Driver's power seat motors

Power Tilt/Telescopic Steering Control Unit (UART)	
Input signal	**Output signal/Device**
Power tilt/telescopic steering switch signal (up, down, push, pull), Memory sensors	Power tilt motor, Power telescopic motor

HandsFreeLink Control Unit	
Input signal	**Output signal/Device**
Remote switches, Microphone input, Bluetooth communication with cellular phone	HandsFreeLink information

Keyless Access Control Unit	
Input signal	**Output signal/Device**
Keyless access system indicator, Immobilizer indicator, Audio unit, LF and RF antenna signals, Touch sensors, S-NET signal	Parking brake switch, Trunk lid outer handle switch, RF antenna, Ignition knob/key/rotate switch, Key out signal, Answer back buzzer, Immobilizer (IMOCONT) signal

AcuraLink Control Unit	
Input signal	**Output signal/Device**
Cellular antenna, Microphone input, GPS antenna, Bluetooth communication with cellular phone	AcuraLink information

(cont'd)

System Description (cont'd)

System Menu	Data List	Data List Indication (Value)
Adaptive Front Lighting System	Adaptive Front Lighting System Switch Command	OFF/ON
	Adaptive Front Lighting System Indicator Command	OFF/ON
	Adaptive Front Lighting System Warning Indicator Command	OFF/ON
	Steering Center Learning Command	Complete/Not Complete
	A/T Gear Position Switch (R) Command	OFF/ON
	Left Rear Wheel Speed Command	OFF/ON
	Right Rear Wheel Speed Command	OFF/ON
Door Lock	Driver's Key Cylinder Switch (LOCK)	OFF/ON
	Driver's Key Cylinder Switch (UNLOCK)	OFF/ON
	Driver's Door Lock Switch (LOCK)	OFF/ON
	Driver's Door Lock Switch (UNLOCK)	OFF/ON
	Driver's Door Lock Knob Switch (LOCK)	OFF/ON
	Driver's Door Lock Knob Switch (UNLOCK)	OFF/ON
	Trunk Lid Opener Switch	OFF/ON
	Front Passenger's Door Switch (LOCK)	OFF/ON
	Front Passenger's Door Switch (UNLOCK)	OFF/ON
	Front Passenger's Door Lock Knob Switch (UNLOCK)	OFF/ON
	Left Rear Door Knob Switch (UNLOCK)	OFF/ON
	Right Rear Door Knob Switch (UNLOCK)	OFF/ON
	Driver's Door Switch	OFF/ON
	Front Passenger's Door Switch	OFF/ON
	Left Rear Door Switch	OFF/ON
	Right Rear Door Switch	OFF/ON
	Driver's Door Lock Switch Illumination Command	OFF/ON
	Driver's Door Outer Handle Illumination Command	OFF/ON
	Driver's Door Inner Handle Illumination Command	OFF/ON
	Driver's Door Pocket Illumination Command	OFF/ON
	Driver's Door Courtesy Light Command	OFF/ON
	Front Passenger's Door Outer Handle Illumination Command	OFF/ON
	Front Passenger's Door Inner Handle Illumination Command	OFF/ON
	Front Passenger's Door Pocket Illumination Command	OFF/ON
	Front Passenger's Door Courtesy Light Command	OFF/ON
	Front Passenger's Door Lock Switch Illumination Command	OFF/ON
	Left Rear Door Inner Handle Illumination Command	OFF/ON
	Left Rear Door Courtesy Light Command	OFF/ON
	Right Rear Door Inner Handle Illumination Command	OFF/ON
	Right Rear Door Courtesy Light Command	OFF/ON
	Door LOCK Command	OFF/ON
	Door UNLOCK Command	OFF/ON
	Driver's Door UNLOCK Command	OFF/ON
	Fuel Fill Door Command	OFF/ON

HDS Inputs, Outputs, and Commands

System Menu	Data List	Data List Indication (Value)
Gauges	Cruise Control Main Switch (ACC switch)	OFF/ON
	Cruise Control Set Switch	OFF/ON
	Cruise Control Resume Switch	OFF/ON
	LKAS Off Switch	OFF/ON
	Distance Switch	OFF/ON
	Washer Fluid Level Switch	OFF/ON
	Engine Oil Pressure Switch	OFF/ON
	VSA/TCS Off Switch	OFF/ON
	Parking Brake Switch	OFF/ON
	Brake Fluid Level Switch	OFF/ON
	Illumination Volume Plus Switch	OFF/ON
	Illumination Volume Minus Switch	OFF/ON
	Select/Reset Switch	OFF/ON
	INFO Previous Switch	OFF/ON
	INFO Next Switch	OFF/ON
	Fuel Sending Unit Input 2	OFF/ON
	VSA/TCS Active Indicator	OFF/ON
	VSA/TCS Indicator (Warning)	OFF/ON
	ABS Indicator	OFF/ON
	EBD Indicator (Electronic Brake Distribution)	OFF/ON
	Cruise Control Main Switch Indicator	OFF/ON
	MIL Indicator	OFF/ON
	Washer Fluid Level Indicator (Canada)	OFF/ON
	DRL Indicator	OFF/ON
	CMBS Indicator	OFF/ON
	ACC Indicator	OFF/ON
	Low Oil Pressure Indicator	OFF/ON
	Charging System Indicator	OFF/ON
	Cruise Main Switch ON Indicator	OFF/ON
	Maintenance Minder Indicator	OFF/ON
	High Beam Indicator	OFF/ON
	Parking Light ON Indicator	OFF/ON
	Low Fuel Warning Indicator	OFF/ON
	Security Indicator	OFF/ON
	Fog Light Indicator	OFF/ON
	Adaptive Front Lighting System Indicator	OFF/ON
	Master Warning Indicator	OFF/ON
	Auto-light Indicator	OFF/ON
	Seat belt Indicator	OFF/ON
	Tire Pressure Warning	OFF/ON
	TPMS Indicator	OFF/ON
	SH-AWD Indicator	OFF/ON
	Keyless Access "No Keyless Remote" Warning	OFF/ON
	Keyless Remote Battery Charge Warning	OFF/ON
	Door Open Indicator	OFF/ON
	Differential Oil Temp Indicator	OFF/ON
	Maintenance Minder Change Oil Indicator	OFF/ON
	Fuel Fill Cap Caution	OFF/ON
	A/T Indicator	OFF/ON
	SRS Indicator	OFF/ON
	Side Airbag Cutoff Indicator	OFF/ON
	Keyless Access Indicator	OFF/ON
	EPS/ECPS Indicator	OFF/ON
	CMBS Radar Become Dirty	OFF/ON
	Radiator Fan Indicator	OFF/ON
	Starter Relay Indicator	OFF/ON
	PAX Warning of 50 mph (80 kph)	OFF/ON
	PAX Warning of near limit	OFF/ON
	PAX Warning of limit	OFF/ON
	Driver's Seat Belt Buckle Switch	OFF/ON
	A/T Gear Position Switch (R)	OFF/ON
	A/T Gear Position Switch (P)	OFF/ON

(cont'd)

System Description (cont'd)

System Menu	Data List	Data List Indication (Value)
Lighting	Headlight Switch (OFF)	OFF/ON
	Headlight Switch (PARKING)	OFF/ON
	Headlight Switch (HEADLIGHT)	OFF/ON
	Headlight Switch (AUTO)	OFF/ON
	Headlight Switch (HIGH BEAM)	OFF/ON
	Headlight Switch (PASSING)	OFF/ON
	Turn Signal Switch (LEFT)	OFF/ON
	Turn Signal Switch (RIGHT)	OFF/ON
	Fog Light Switch	OFF/ON
	Rear Fog Light Switch	OFF/ON
	Trunk Lid and Fuel Lid Opener Switch Illumination Command	OFF/ON
	Driver's Door Lock Switch Illumination Command	OFF/ON
	Driver's Door Outer Handle Illumination Command	OFF/ON
	Driver's Door Inner Handle Illumination Command	OFF/ON
	Driver's Door Pocket Illumination Command	OFF/ON
	Driver's Door Courtesy Light Command	OFF/ON
	Front Passenger's Door Outer Handle Illumination Command	OFF/ON
	Front Passenger's Door Inner Handle Illumination Command	OFF/ON
	Front Passenger's Door Pocket Illumination Command	OFF/ON
	Front Passenger's Door Courtesy Light Command	OFF/ON
	Front Passenger's Remote Door Lock Switch Illumination Command	OFF/ON
	Left Rear Door Inner Handle Illumination Command	OFF/ON
	Left Rear Door Courtesy Light Command	OFF/ON
	Right Rear Door Inner Handle Illumination Command	OFF/ON
	Right Rear Door Courtesy Light Command	OFF/ON
	Autolight Sensor Input Voltage	0.0—5.0 V
	Autolight Sensor Malfunction Detection Voltage Max	0.0—5.0 V
	Autolight Sensor Malfunction Detection Voltage Min	0.0—5.0 V
	Ignition Key Cylinder Light Command	OFF/ON
	Interior Light Command	OFF/ON
	Foot Light Command	OFF/ON
	Left Turn Signal Command	OFF/ON
	Right Turn Signal Command	OFF/ON
	Floor Light Command	OFF/ON
	Headlight Cleaner Command	OFF/ON
	Autolight Small Command	OFF/ON
	Autolight Headlight Command	OFF/ON
	Autolight Warning Command	OFF/ON
	Autolight Headlight Backup Line Command	OFF/ON
	Map Light Off Command	OFF/ON
	Headlight Switch (BACK-UP)	OFF/ON
	Ignition Switch (IG1)	OFF/ON
	Headlight Command	OFF/ON
	Headlight High Beam Command	OFF/ON
	Parking Light Command	OFF/ON
	Fog Light Command	OFF/ON
	DRL Command	OFF/ON

System Menu	Data List	Data List Indication (Value)
Keyless	Driver's Key Cylinder Switch (LOCK)	OFF/ON
	Driver's Key Cylinder Switch (UNLOCK)	OFF/ON
	Driver's Door Lock Switch (LOCK)	OFF/ON
	Driver's Door Lock Switch (UNLOCK)	OFF/ON
	Driver's Door Lock Knob Switch (LOCK)	OFF/ON
	Driver's Door Lock Knob Switch (UNLOCK)	OFF/ON
	Trunk Lid Opener Switch	OFF/ON
	Front Passenger's Door Switch (LOCK)	OFF/ON
	Front Passenger's Door Switch (UNLOCK)	OFF/ON
	Front Passenger's Door Knob Switch (UNLOCK)	OFF/ON
	Left Rear Door Knob Switch (UNLOCK)	OFF/ON
	Right Rear Door Knob Switch (UNLOCK)	OFF/ON
	Driver's Door Switch	OFF/ON
	Front Passenger's Door Switch	OFF/ON
	Left Rear Side Door Switch	OFF/ON
	Right Rear Side Door Switch	OFF/ON
	Trunk Lid/Tailgate Switch	OFF/ON
	Trunk Handle Switch	OFF/ON
	Trunk Main Switch	OFF/ON
	Door LOCK Command	OFF/ON
	Door UNLOCK Command	OFF/ON
	Driver's Door UNLOCK Command	OFF/ON
	Trunk Lid Release Command	OFF/ON
	Keyless Buzzer Command	OFF/ON
	Ignition Switch (IG1)	OFF/ON
Power Window	Power Window Main Switch	OFF/ON
	Power Window Master, Driver's AUTO Switch	OFF/ON
	Power Window Master, Driver's UP Switch	OFF/ON
	Power Window Master, Driver's DOWN Switch	OFF/ON
	Power Window Master, Front Passenger's UP Switch	OFF/ON
	Power Window Master, Front Passenger's DOWN Switch	OFF/ON
	Power Window Master, Left Rear UP Switch	OFF/ON
	Power Window Master, Left Rear DOWN Switch	OFF/ON
	Power Window Master, Right Rear UP Switch	OFF/ON
	Power Window Master, Right Rear DOWN Switch	OFF/ON
	Power Window Master, Front Passenger's AUTO Switch	OFF/ON
	Power Window Master, Left Rear AUTO Switch	OFF/ON
	Power Window Master, Right Rear AUTO switch	OFF/ON
	Front Passenger's Window Switch (UP)	OFF/ON
	Front Passenger's Window Switch (DOWN)	OFF/ON
	Front Passenger's Window Switch (AUTO)	OFF/ON
	Left Rear Window Switch (UP)	OFF/ON
	Left Rear Window Switch (DOWN)	OFF/ON
	Left Rear Window Switch (AUTO)	OFF/ON
	Right Rear Window Switch (UP)	OFF/ON
	Right Rear Window Switch (DOWN)	OFF/ON
	Right Rear Window Switch (AUTO)	OFF/ON
	Driver's Window Motor A-Phase Pulse Signal	NONE/DETECT
	Driver's Window Motor B-Phase Pulse Signal	NONE/DETECT
	Front Passenger's Window Motor A-Phase Pulse Signal	NONE/DETECT
	Front Passenger's Window Motor B-Phase Pulse Signal	NONE/DETECT
	Left Rear Window Motor A-Phase Pulse Signal	NONE/DETECT
	Left Rear Window Motor B-Phase Pulse Signal	NONE/DETECT
	Right Rear Window Motor A-Phase Pulse Signal	NONE/DETECT
	Right Rear Window Motor B-Phase Pulse Signal	NONE/DETECT
	Driver's Window Motor Command	OFF, UP, DOWN
	Front Passenger's Window Motor Command	OFF, UP, DOWN
	Left Rear Window Motor Command	OFF, UP, DOWN
	Right Rear Window Motor Command	OFF, UP, DOWN

(cont'd)

System Description (cont'd)

System Menu	Data List	Data List Indication (Value)
Power Seats/Power Mirrors	DPMS MEM Switch	OFF/ON
	DPMS POS1 Switch	OFF/ON
	DPMS POS2 Switch	OFF/ON
	Left Power Mirror Horizontal Sensor	NORMAL/ABNORMAL
	Left Power Mirror Vertical Sensor	NORMAL/ABNORMAL
	Right Power Mirror Horizontal Sensor	NORMAL/ABNORMAL
	Right Power Door Mirror Vertical Sensor	NORMAL/ABNORMAL
	Left Power Mirror UP-DOWN Motor Command	OFF, UP, DOWN
	Left Power Mirror LEFT-RIGHT Motor Command	OFF, UP, DOWN
	Right Power Mirror UP-DOWN Motor Command	OFF, UP, DOWN
	Right Power Mirror LEFT-RIGHT Motor Command	OFF, UP, DOWN
	Memory Switch Position 1 Indicator Command	OFF/ON
	Memory Switch Position 2 Indicator Command	OFF/ON
	Memory Switch Illumination Command	OFF/ON
	Power Mirror Adjust UP Switch	OFF/ON
	Power Mirror Adjust LEFT TURN Switch	OFF/ON
	Power Mirror Adjust DOWN Switch	OFF/ON
	Power Mirror Adjust RIGHT TURN Switch	OFF/ON
	Power Mirror LEFT Switch	OFF/ON
	Power Mirror RIGHT Switch	OFF/ON
	Slide Switch FORWARD	OFF/ON
	Slide Switch BACKWARD	OFF/ON
	Recline Switch FORWARD	OFF/ON
	Recline Switch BACKWARD	OFF/ON
	Front UP-DOWN Switch UP	OFF/ON
	Front UP-DOWN Switch DOWN	OFF/ON
	Rear UP-DOWN Switch UP	OFF/ON
	Rear UP-DOWN Switch DOWN	OFF/ON
	Ignition Switch for Power Seat Control	OFF/ON
	Slide Motor Command	OFF, FWD, RWD
	Recline Motor Command	OFF, FWD, RWD
	Front Height Motor Command	OFF, UP, DOWN
	Rear Height Motor Command	OFF, UP, DOWN
	Seat Memory Set Switch	OFF/ON
	Seat Memory Position 1 Switch	OFF/ON
	Seat Memory Position 2 Switch	OFF/ON
	ATP Switch	OFF/ON
	Headrest Switch	OFF/ON
	Headrest Motor	OFF/ON
	Column Auto Switch	OFF/ON
	Column Tilt UP Switch	OFF/ON
	Column Tilt DOWN Switch	OFF/ON
	Column Telescopic Pull Switch	OFF/ON
	Column Telescopic Push Switch	OFF/ON
	Ignition Switch (ETS)	OFF/ON
	Slide Sensor	OFF/ON
	Front UP-DOWN Sensor	OFF/ON
	Recline Sensor	OFF/ON
	Rear UP-DOWN Sensor	OFF/ON
	Column Tilt Sensor	OFF/ON
	Column Telescopic Sensor	OFF/ON
	Power Seat Buzzer Command	OFF/ON
	Column Tilt Motor	OFF, UP, DOWN
	Column Telescopic Motor	OFF, PULL, PUSH
	Seat Memory Position	None, Pos1, Pos2

System Menu	Data List	Data List Indication (Value)
Security	Driver's Key Cylinder Switch (LOCK)	OFF/ON
	Driver's Key Cylinder Switch (UNLOCK)	OFF/ON
	Driver's Door Lock Switch (LOCK)	OFF/ON
	Driver's Door Lock Switch (UNLOCK)	OFF/ON
	Driver's Door Lock Knob Switch (LOCK)	OFF/ON
	Driver's Door Lock Knob Switch (UNLOCK)	OFF/ON
	Trunk Lid Opener Switch	OFF/ON
	Ignition Key Cylinder Switch	OFF/ON
	Trunk Lid/Tailgate Switch	OFF/ON
	Trunk Handle Switch	OFF/ON
	Radio Switch	OFF/ON
	Door LOCK Command	OFF/ON
	Door UNLOCK Command	OFF/ON
	Driver's Door UNLOCK Command	OFF/ON
	Trunk Lid Release Command	OFF/ON
	Hood Switch	OFF/ON
	Ignition Switch (IG1)	OFF/ON
	Headlight Command	OFF/ON
	Headlight High Beam Command	OFF/ON
	Parking Light Command	OFF/ON
	Horn Command	OFF/ON
Wiper	Windshield Wiper Switch (LOW)	OFF/ON
	Windshield Wiper Switch (HIGH)	OFF/ON
	Windshield Wiper Switch (MIST)	OFF/ON
	Windshield Washer Switch	OFF/ON
	Intermittent Wiper Dwell Timer	OFF/ON
	Brake Pedal Position Switch	OFF/ON
	Headlight Washer Switch	OFF/ON
	Windshield Wiper Motor PARK Switch	OFF/ON
	Windshield Wiper Switch (BACK-UP)	OFF/ON
	Windshield Wiper Motor HI Command	OFF/ON
	Windshield Wiper Motor LO Command	OFF/ON
	Windshield Washer Motor Command	OFF/ON

(cont'd)

System Description (cont'd)

Outputs

Unit	System	Data List	Note and Drive time
MICU	Lighting	Ignition Key Cylinder Light Command	Illuminates for 30 seconds
	Lighting	Interior Light Command	Illuminates for 30 seconds
	Door Lock	LOCK All Doors	Outputs LOCK signal 1 time (0.6 sec.) to all door
	Door Lock	UNLOCK All Doors	Outputs UNLOCK signal 1 time (0.6 sec.) to all door
	Door Lock	UNLOCK Driver's Side Door	Outputs UNLOCK signal 1 time (0.6 sec.) to driver side door
	Keyless	Trunk Lid Release Command	———
	Lighting	Left Turn Signal Command	Blinks for 5 seconds
	Lighting	Right Turn Signal Command	Blinks for 5 seconds
	Keyless	Keyless Buzzer Command	Operates for 100 ms
	Lighting	Floor Light	Illuminates for 30 seconds
	Lighting	Map Light Off	Outputs for 100 ms
Relay Control Module	Wiper	Windshield Wiper Motor LOW Command	Operates wiper for 5 seconds (LOW speed)
	Wiper	Windshield Wiper Motor HIGH Command	Operates wiper for 5 seconds (HIGH speed)
	Wiper	Windshield Washer Command	Operates washer for 5 seconds
	Lighting	Headlight Command	Operates for 15 seconds
	Lighting	Headlight High Beam Command	Operates for 15 seconds
	Lighting	Parking Light Command	Operates for 15 seconds
	Security	Horn Command	Operates Horn for 1 second
	Lighting	Daytime Running Light Signal (Canada models)	Operates for 15 seconds
Driver's MPCS Unit	P/W	Driver's Window Motor UP	Drives for 3 seconds
	P/W	Driver's Window Motor DOWN	Drives for 3 seconds
	P/W	Front Passenger's Window Motor UP	Drives for 3 seconds
	P/W	Front Passenger's Window Motor DOWN	Drives for 3 seconds
	P/W	Left Rear Window Motor UP	Drives for 3 seconds
	P/W	Left Rear Window Motor DOWN	Drives for 3 seconds
	P/W	Right Rear Window Motor UP	Drives for 3 seconds
	P/W	Right Rear Window Motor DOWN	Drives for 3 seconds
	Power Seats	Memory Indicator 1	Drives for 3 seconds
	Power Seats	Memory Indicator 2	Drives for 3 seconds
	Power Seats	Left Power Mirror Motor UP	Drives for 3 seconds
	Power Seats	Left Power Mirror Motor DOWN	Drives for 3 seconds
	Power Seats	Left Power Mirror Motor LEFT	Drives for 3 seconds
	Power Seats	Left Power Mirror Motor RIGHT	Drives for 3 seconds
	Power Seats	Right Power Mirror Motor UP	Drives for 3 seconds
	Power Seats	Right Power Mirror Motor DOWN	Drives for 3 seconds
	Power Seats	Right Power Mirror Motor LEFT	Drives for 3 seconds
	Power Seats	Right Power Mirror Motor RIGHT	Drives for 3 seconds
	Lighting	Memory Switch Illumination Light	Drives for 3 seconds
	Lighting	Trunk & Fuel Opener Switch Illumination Light	Drives for 3 seconds
	Lighting	Driver's Door Lock Switch Illumination Light	Drives for 3 seconds
	Lighting	Driver's Outer Handle Illumination Light	Drives for 3 seconds
	Lighting	Driver's Inner Handle Illumination Light	Drives for 3 seconds
	Lighting	Driver's Door Pocket Illumination Light	Drives for 3 seconds
	Lighting	Driver's Door Courtesy Light	Drives for 3 seconds
	Lighting	Front Passenger's Door Lock Switch Illumination Light	Drives for 3 seconds
	Lighting	Front Passenger's Outer Handle Illumination Light	Drives for 3 seconds
	Lighting	Front Passenger's Inner Handle Illumination Light	Drives for 3 seconds
	Lighting	Front Passenger's Door Pocket Illumination Light	Drives for 3 seconds
	Lighting	Front Passenger's Door Courtesy Light	Drives for 3 seconds
	Lighting	Left Rear Inner Handle Illumination Light	Drives for 3 seconds
	Lighting	Left Rear Door Courtesy Light	Drives for 3 seconds
	Lighting	Right Rear Inner Handle Illumination Light	Drives for 3 seconds
	Lighting	Right Rear Door Courtesy Light	Drives for 3 seconds

Outputs

Unit	System	Data List	Note and Drive time
Gauges	Gauge	Self-diagnostic function	———
Power Seat Control Unit	Power Seats	Memory Seat Indicator 1	
	Power Seats	Memory Seat Indicator 2	
	Power Seats	Power Seat: Slide Motor-Full FORWARD	
	Power Seats	Power Seat: Slide Motor-Full BACKWARD	
	Power Seats	Power Seat: Front UP-DOWN Motor-Full UP	
	Power Seats	Power Seat: Front UP-DOWN Motor-Full DOWN	
	Power Seats	Power Seat: Rear UP-DOWN Motor-Full UP	
	Power Seats	Power Seat: Rear UP-DOWN Motor-Full DOWN	
	Power Seats	Power Seat: Recline Motor-Full FORWARD	
	Power Seats	Power Seat: Recline Motor-Full BACKWARD	
	Power Seats	Power Seat: Memory Buzzer-5 seconds	Memory Buzzer-5 seconds
	Power Seats	Column Tilt Motor Full Up	
	Power Seats	Column Tilt Motor Full Down	
	Power Seats	Column Telescopic Motor Full Pull Up	
	Power Seats	Column Telescopic Motor Full Push Down	
Adaptive Front Lighting	Adaptive front lighting	Headlight-LEFT/RIGHT	Adaptive Front Lighting LEFT/RIGHT
	Adaptive front lighting	Headlight-DOWN	Adaptive Front Lighting DOWN

HONDA

(cont'd)

System Description (cont'd)

Outputs

Unit	System	Data List	Note and Drive time
Keyless Access Control Unit	Keyless Access	Immobilizer Indicator Driving	
	Keyless Access	Keyless Access Indicator Driving	
	Keyless Access	[NO KEYLESS REMOTE] indication	
	Keyless Access	[KEYLESS REMOTE BATT] indication	
	Keyless Access	Interior Buzzer Driving	
	Keyless Access	Exterior Buzzer Driving	
	Keyless Access	(Ignition) Key Switch Driving	
	Keyless Access	IMOCONT Driving	
	Keyless Access	IGNCONT Driving	
	Keyless Access	S-Net Line (IMOCD Terminal) Driving	
	Keyless Access	IGNTRX Line Driving	
	Keyless Access	RF1 RXVCC Driving	
	Keyless Access	RF2 RXVCC Driving	
	Keyless Access	RF1 TXVCC Driving	
	Keyless Access	RF2 TXVCC Driving	
	Keyless Access	Driver (Door) Antenna Driving	
	Keyless Access	Front Passenger (Door) Antenna Driving	
	Keyless Access	Driver Side Rear (Door) Antenna Driving	
	Keyless Access	Passenger Side Rear (Door) Antenna Driving	
	Keyless Access	Driver Side-Glass Antenna Driving	
	Keyless Access	Passenger Side-Glass Antenna Driving	
	Keyless Access	Trunk/Rear Bumper Antenna Driving	
	Keyless Access	Front Interior Antenna Driving	
	Keyless Access	Middle Interior Antenna Driving	
	Keyless Access	Rear Interior Antenna Driving	
	Keyless Access	Rear Interior Tray Antenna Driving	
	Keyless Access	Trunk/Rear Shelf Antenna Driving	
	Keyless Access	Driver (Door) Antenna L DC Output	
	Keyless Access	Front Passenger (Door) Antenna L DC Output	
	Keyless Access	Driver Side Rear (Door) Antenna L DC Output	
	Keyless Access	Passenger Side Rear (Door) Antenna L DC Output	
	Keyless Access	Driver Side-Glass Antenna L DC Output	
	Keyless Access	Passenger Side-Glass Antenna L DC Output	
	Keyless Access	Trunk/Tailgate/Rear Bumper Antenna L DC Output	
	Keyless Access	Front Interior Antenna L DC Output	
	Keyless Access	Middle Interior Antenna L DC Output	
	Keyless Access	Rear Interior Antenna L DC Output	
	Keyless Access	Rear Interior Tray Antenna L DC Output	
	Keyless Access	Trunk/Rear Shelf Antenna L DC Output	
	Keyless Access	RF1 TXD DC Output	
	Keyless Access	RF2 TXD DC Output	
	Keyless Access	[DO NOT HAVE KEYLESS REMOTE] Indication	
	Keyless Access	Exterior Buzzer Driving (Short Time)	
	Keyless Access	Door Lock Driving	
	Keyless Access	Door Unlock Driving	
	Keyless Access	Auto Lock Cancel Switch Indicator Driving	
	Keyless Access	Keyless Remote - Customize Link To Driver 1 Driving	
	Keyless Access	Keyless Remote - Customize Link To Driver 2 Driving	
	Keyless Access	Keyless Remote Slot Antenna Driving	
	Keyless Access	Keyless Remote Slot Antenna DC Output	

Troubleshooting - B-CAN System Diagnosis Test Mode A

NOTE: AcuraLink can be used to easily check for B-CAN line failure (see page 23-271).

Check the PCM for DTCs and troubleshoot PCM (see page 11-70) or F-CAN loss of communication errors first, do the following diagnosis if the symptom is related to the B-CAN system.

1. Compare the symptom with this list of B-CAN related systems:

   - Gauge control module
   - Exterior lights
   - Turn signals
   - Entry light control
   - Interior lights
   - Safety indicators
   - Rear window defogger
   - HandsFreeLink
   - Horns (security and panic)
   - Chimes (key, seat belt, lights-on, and parking brake)
   - Power windows
   - Power window/moonroof timer
   - Wiper/washer
   - Security
   - Keyless entry
   - Power door locks
   - Climate control
   - Key interlock
   - Dash light brightness
   - Driving position memory system
   - Keyless access
   - XM radio

   Is the symptom related to the B-CAN system?

   YES—Go to step 2.

   NO—Go to the system troubleshooting for the system with the symptom. ■

2. Connect the HDS to the data link connector, then turn the ignition switch to ON (II).

3. From the BODY ELECTRICAL SYSTEM SELECT menu, select UNIT INFORMATION, and then select the CONNECTED UNITS listed to see if they are communicating with the HDS.

   - MICU
   - Gauge control module
   - Combination switch control unit
   - Relay control module
   - Power seat control unit (HDS name: Memory Seat Control Unit)
   - HandsFreeLink control unit
   - Driver's MPCS unit
   - Immobilizer unit
   - Adaptive front lighting control unit
   - AcuraLink control unit (XM receiver) (HDS name: HIP (Honda Information Platform)
   - Keyless access control unit
   - Climate control unit

   NOTE:
   - If a unit is communicating with the HDS, DETECT will be displayed.
   - If a unit is not communicating or the vehicle is not equipped, "Not Available" will be displayed.
   - The HDS only checks the status one time when BODY ELECTRICAL is selected. To recheck the status after repair, reboot the HDS.

   Are all control units communicating with the HDS?

   YES—Go to step 4.

   NO—If any of the control units are not communicating, go to B-CAN System Diagnosis Test Mode B (see page 22-132). If all units are not communicating or only the MICU is communicating, go to DTC B1000 troubleshooting (see page 22-142). ■

(cont'd)

Troubleshooting - B-CAN System Diagnosis Test Mode A (cont'd)

4. Select the system that has the problem from the BODY ELECTRICAL menu, then select DTCs.

   Are any DTCs indicated?
   YES—Go to step 5.
   NO—If the problem is related to one of the following items and the system that is malfunctioning does not stop or turn off, go to B-CAN System Diagnosis Test Mode C (see page 22-133). If the problem is related to one of the following items and the system that is malfunctioning does not run or turn on, go to B-CAN System Diagnosis Test Mode D (see page 22-134).
   - Exterior lights
   - Turn signals
   - Entry light control
   - Interior lights
   - Horns (security and panic)
   - Power windows
   - Wiper/washer
   - Power door locks

   If the problem is related to one of the following items, go to the troubleshooting for that individual system. ■
   - Gauge control module
   - Safety indicators
   - Chimes (key, seat belt and lights-on)
   - Rear window defogger (climate control)
   - Security
   - Keyless entry
   - Climate control
   - Key interlock
   - Dash light brightness
   - Audio system
   - Navigation
   - Driving position memory system
   - HandsFreeLink
   - Keyless access
   - Adaptive front lighting

5. Record all DTCs, and sort them by DTC type.

6. Troubleshoot the DTC(s) in this order:
   - Battery voltage DTCs.
   - Internal error DTCs.
   - Loss of communication DTCs. Begin troubleshooting with the lowest number first (Example: if DTC B1005 and B1008 are retrieved, begin by troubleshooting B1005).
   - Signal error DTCs.

Troubleshooting - B-CAN System Diagnosis Test Mode B

Do this diagnosis if any of the control units are not communicating (Not Available is displayed in the HDS) as found by the B-CAN System Diagnosis Test Mode A (see page 22-131).

1. Using the HDS, select the system that has the symptom from the BODY ELECTRICAL menu.

2. Select DTCs, and then check for loss of communication DTCs.

   Are any loss of communication DTCs indicated?

   YES—Go to step 3.

   NO—Replace the MICU (see page 22-88). ■

3. Do the power, ground, and communication part of the input test for the unit(s) not communicating with the HDS.

Unit not communicating
MICU (see page 22-152)
Driver's MPCS unit (see page 22-159)
Gauge control module (see page 22-155)
Relay control module (see page 22-158)
Combination switch control unit (see page 22-157)
Power seat control unit (see page 22-562)
HandsFreeLink control unit (see page 23-338)
Adaptive front lighting control unit (see page 22-268)
Keyless access control unit (see page 22-623)
Climate control unit (see page 21-66)

Troubleshooting - B-CAN System Diagnosis Test Mode C

Do this diagnosis if a component that is controlled by the B-CAN system does not stop or turn off.

NOTE:
- If the component does not operate or turn ON, go to B-CAN System Diagnosis Test Mode D (see page 22-134).
- See the B-CAN system unit input/output index for a list of input and output devices and the control units that monitor the input and controls the output devices (see page 22-120).

1. Check for DTCs by selecting the TEST MODE menu from the HDS.

   Are any DTCs indicated?

   YES—Go to B-CAN System Diagnosis Test Mode A (see page 22-131). ■

   NO—Go to step 2.

2. Turn off the switch that controls the malfunctioning component.

3. Select DATA LIST from the TEST MODE menu, and check the input of the switch that controls the component.

   Does the HDS indicate the switch is OFF?

   YES—Go to step 4.

   NO—Go to step 6.

4. In the DATA LIST, check the output signal of the malfunctioning component.

   Is the output signal OFF?

   YES—Go to step 5.

   NO—Replace the control unit that controls the device that will not turn OFF (see page 22-120). ■

5. Check the relay that does not stop or turn off, if applicable, then check for a short in the wire between the relay and the component, relay and control unit or the component and control unit.

   Are the relay and the wire harness OK?

   YES—Replace the control unit that controls the component that will not turn OFF. ■

   NO—Replace the relay or repair the wire harness. ■

6. Check the switch, then check for a short in the wire between the switch and the control unit that monitors the switch.

   Are the switch and wire harness OK?

   YES—Replace the control unit that monitors the switch. ■

   NO—Replace the switch or repair the wire harness. ■

Troubleshooting - B-CAN System Diagnosis Test Mode D

Do this diagnosis if a component that is controlled by the B-CAN system does not run or come on.

NOTE:
- If the component does not turn off or stop, go to B-CAN System Diagnosis Test Mode C (see page 22-133).
- See the B-CAN system unit input/output index for a list of input and output devices and the control units that monitor the input and controls the output devices (see page 22-120).

1. Check the fuse of the malfunctioning output device.

   Is the fuse OK?

   YES—Go to step 2.

   NO—Replace the fuse and recheck. ■

2. Check for DTCs by selecting the TEST MODE menu from the HDS.

   Are any DTCs indicated?

   YES—Go to B-CAN System Diagnosis Test Mode A (see page 22-131). ■

   NO—Go to step 3.

3. Turn ON the switch that controls the malfunctioning component.

4. Select DATA LIST from the TEST MODE menu, and check output signal for the malfunctioning component.

   Is there an output signal?

   YES—Go to step 5.

   NO—Go to step 9.

5. Check the relay and ground, then check for an open or a short in the circuit for the malfunctioning component.

   Is the relay and the circuit OK?

   YES—Go to step 6.

   NO—Replace the relay or repair the wire circuit. ■

6. Do the function test for the malfunctioning component.

   Does the output device pass the function test?

   YES—Go to step 7.

   NO—Replace the component. ■

7. With the malfunctioning output device connected, connect a voltmeter between the malfunctioning output device and body ground on the wire that the control unit uses to control the output device circuit.

8. Select MISC. TEST from the TEST MODE menu, and do the forced operation test of the malfunctioning component.

   Is there a change in voltage (12 V to 0 V or 0 V to 12 V)?

   YES—Inspect the ground for the component. If OK, replace the component. ■

   NO—Replace the control unit that controls the malfunctioning component. ■

9. Select DATA LIST from the TEST MODE menu, and make sure the switch signal input for the malfunctioning system indicates a change when operated.

   Does the switch input indicated ON when the switch is ON?

   YES—Replace the control unit that controls the malfunctioning component. ■

   NO—Go to step 10.

10. Check the switch and its ground (if applicable), then check for an open or a short in the wire between the switch and the control unit that monitors it.

    Is the switch and the wire harness OK?

    YES—Replace the control unit that monitors the switch. ■

    NO—Replace the switch or repair the wire harness. ■

Troubleshooting - B-CAN System Diagnosis Test Mode 1 and Test Mode 2 (without the HDS)

Special Tools Required
MPCS service connector 07WAZ-001010A

Test Mode 1

Check the PCM for DTCs and troubleshoot PCM (see page 11-3) or F-CAN loss of communication errors first, then perform this diagnosis if the HDS is not available.

1. Check the No. 7 (10 A) and No. 21 (10 A) fuses in the driver's under-dash fuse/relay box.

   Are the fuses OK?
   YES—Go to step 2.
   NO—Find and repair the cause of the blown fuse. ■

2. Remove the left kick panel (see page 20-67), and the driver's dashboard under cover.

3. Turn the ignition switch to ON (II), and move the interior lights switch to the "middle (door)" position.

4. Connect the MPCS service connector (A) to the MICU service check connector socket (B) in the driver's under-dash fuse/relay box.

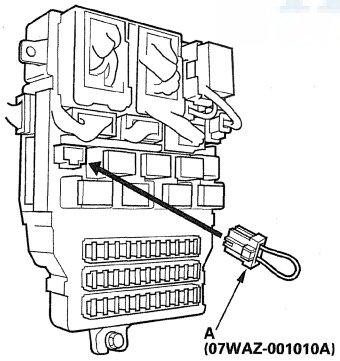

5. Wait 5 seconds, and watch the map lights. When the system enters Mode 1, the front and rear map lights will flash quickly once, and a double beep will be heard.

6. If there is a DTC, the map lights and ignition key light will blink, pause, then repeat the DTC as long as the ignition switch is turned to ON (II).

   Is there a repeating DTC?
   YES—Count the blinks, then go to step 7.
   NO—Go to step 8.

7. About 1 second after you go into self-diagnostic Mode 1, the map lights will indicate the DTC, and repeat it every 3 seconds. If there is more than one DTC, the system will indicate them in ascending order, beginning with the DTC with the lowest numerical value. Troubleshoot the DTCs as indicated below:

   - DTC 2, 3, 4 and 5 simultaneously: Check for an open in the LT GRN wire between MICU D11 and relay control module J7, LT GRN wire between MICU N28 and combination switch control unit No. 4, LT GRN wire between MICU J4 and driver's MPCS unit A28, and LT GRN wire between MICU N22 and gauge control module B17. If the wire is OK, substitute a known-good driver's under-dash fuse/relay box, under-hood fuse/relay box, gauge control module, wiper/washer switch, and driver's MPCS unit one at a time, in that order, and recheck for the DTCs after each substitution.
   - DTC 1 only: Go to MICU input test (see page 22-152).
   - DTC 2 only (no other DTCs present): Go to the relay control module input test (see page 22-158). If all inputs are OK, substitute a known-good relay control module and then a MICU, one at a time, and then check for DTCs. If a DTC recurs after a substitution, replace that unit.
   - DTC 3 only (no other DTCs present): Go to the driver's MPCS unit input test (see page 22-159). If all inputs are OK, substitute a known-good driver's MPCS unit and then a MICU, one at a time, and then check for DTCs. If a DTC recurs after a substitution, replace that unit.
   - DTC 4 only (no other DTCs present): Go to the combination switch control unit input test (see page 22-157). If all inputs are OK, substitute a known-good wiper/washer switch and then a MICU, one at a time, and then check for DTCs. If a DTC recurs after a substitution, replace that unit.
   - DTC 5 only (no other DTCs present): Go to the gauge control module input test (see page 22-155). If all inputs are OK, substitute a known-good gauge control module and then a MICU, one at a time, and then check for DTCs. If a DTC recurs after a substitution, replace that unit.

(cont'd)

Troubleshooting - B-CAN System Diagnosis Test Mode 1 and Test Mode 2 (without the HDS) (cont'd)

DTC	Cause
1	The MICU cannot receive signals from the BUS communication line.
2	The MICU cannot receive signals from the relay control module communication line.
3	The MICU cannot receive signals from the driver's MPCS communication line.
4	The MICU cannot receive signals from the combination switch communication line.
5	The MICU cannot receive signals from the gauge control module.

8. Check for B-CAN DTCs indicated by the gauge control module (see page 22-103).

   Are any DTCs indicated?

   YES—Go to step 9.

   NO—Go to step 11.

9. Record all DTCs and sort them by type using the DTC Troubleshooting.

10. Troubleshoot the DTCs in these order:

    - Battery voltage DTCs
    - Internal error DTCs
    - Loss of communication DTCs (begin with the lowest number first; for example, if DTC B1005 and B1008 are retrieved, troubleshoot B1005 first)
    - Signal error DTCs

Test Mode 2

11. Remove the MPCS service connector from the driver's under-dash fuse/relay, box MICU service check connector socket for 5—10 seconds, then re-insert it to enter Mode 2. When the system enters Mode 2, the front and rear map lights will flash two times quickly and then go off.

    NOTE: If the MPCS connector is disconnected for too short or too long of a time, or the ignition switch is turned to LOCK (0), the system will return to Test Mode 1.

12. The following tables list the circuits that can be checked in Test Mode 2. Operate the switch that is most closely related to the problem. If the circuit is OK, the map lights will blink once. If the circuit is faulty, there will be no indication.

MICU

Item
Driver's door switch (OPEN)
Front passenger's door switch (OPEN)
Left rear door switch (OPEN)
Right rear door switch (OPEN)
Trunk lid latch switch (OPEN)
Front passenger's door lock knob switch (UNLOCK)*
Left rear door lock knob switch (UNLOCK)
Right rear door lock knob switch (UNLOCK)*
Audio security ground (when disconnected)
Driver's seat belt buckle switch (unbuckled)
Brake pedal position switch (ON; brake pedal pressed)
Passenger's door lock switch (LOCK/UNLOCK)
Mirror select switch (LEFT, CENTER, RIGHT)
Mirror switch (LEFT, RIGHT, UP, DOWN)

* The front passenger's and door lock knob switches must be in the locked position when beginning the test.

RELAY CONTROL MODULE

Item
Windshield wiper switch (AUTO STOP/PARK)
Security hood switch (OPEN)
A/C pressure switch/thermal protector (A/C ON)

COMBINATION SWITCH CONTROL UNIT

Item
Turn signal switch (LEFT)
Turn signal switch (RIGHT)
Combination light switch (ON; each position)
Dimmer switch (ON)
Passing switch (ON)
Windshield wiper switch (ON)
Intermittent wiper dwell timer
Windshield washer switch (ON)

DRIVER'S MPCS UNIT

Item
Power window master switch (Driver's window UP)
Power window master switch (Driver's window DOWN)
Power window master switch (Driver's window AUTO UP)
Power window master switch (Driver's window AUTO DOWN)
Power window master switch (Front passenger's window UP)
Power window master switch (Front passenger's window DOWN)
Power window master switch (Left rear window UP)
Power window master switch (Left rear window DOWN)
Power window master switch (Right rear window UP)
Power window master switch (Right rear window DOWN)
Driver's door key cylinder switch* (LOCK)
Driver's door key cylinder switch* (UNLOCK)
Driver's door lock switch (LOCK)
Driver's door lock switch (UNLOCK)
Driver's door lock knob switch (LOCK)
Driver's door lock knob switch (UNLOCK)
Driving position memory switches (1, 2, memo)
Passenger's window switch (UP)
Passenger's window switch (DOWN)
Passenger's window switch (AUTO UP)
Passenger's window switch (AUTO DOWN)
Trunk lid opener switch (ON)
Fuel fill door opener switch (ON)

* A second key is necessary to check the key cylinder inputs.
Be sure to rotate the key cylinder switch two times to each position (lock and lock, unlock and unlock) to ensure the door lock knob switch is in the appropriate position.

GAUGE CONTROL MODULE

Item
Parking brake switch (ON; parking brake applied)
Cruise control main SET/RESUME/CANCEL switch (ON; switch pressed)
Transmission range switch (P, R, N, D)
Washer fluid level switch (fluid removed) (Canada models)
Brake fluid level switch (fluid removed)
Illumination control switches (+, −)
MID switches (Select/Reset, <INFO, INFO>)

POWER SEAT CONTROL UNIT

Item
Power seat slide switch (FORWARD, BACKWARD)
Power seat front up-down switch (UP, DOWN)
Power seat rear up-down switch (UP, DOWN)
Power seat recline switch (FORWARD, RECLINE)
Power tilt/telescopic steering switch (UP, DOWN, PUSH, PULL)
Rear head restraint tilt switch (ON)

Do the map lights indicate proper switch operation?

YES—Go to function and input test for the system related to the failure. ■

NO—Repair the open, short, or replace the faulty switch. ■

Circuit Diagram

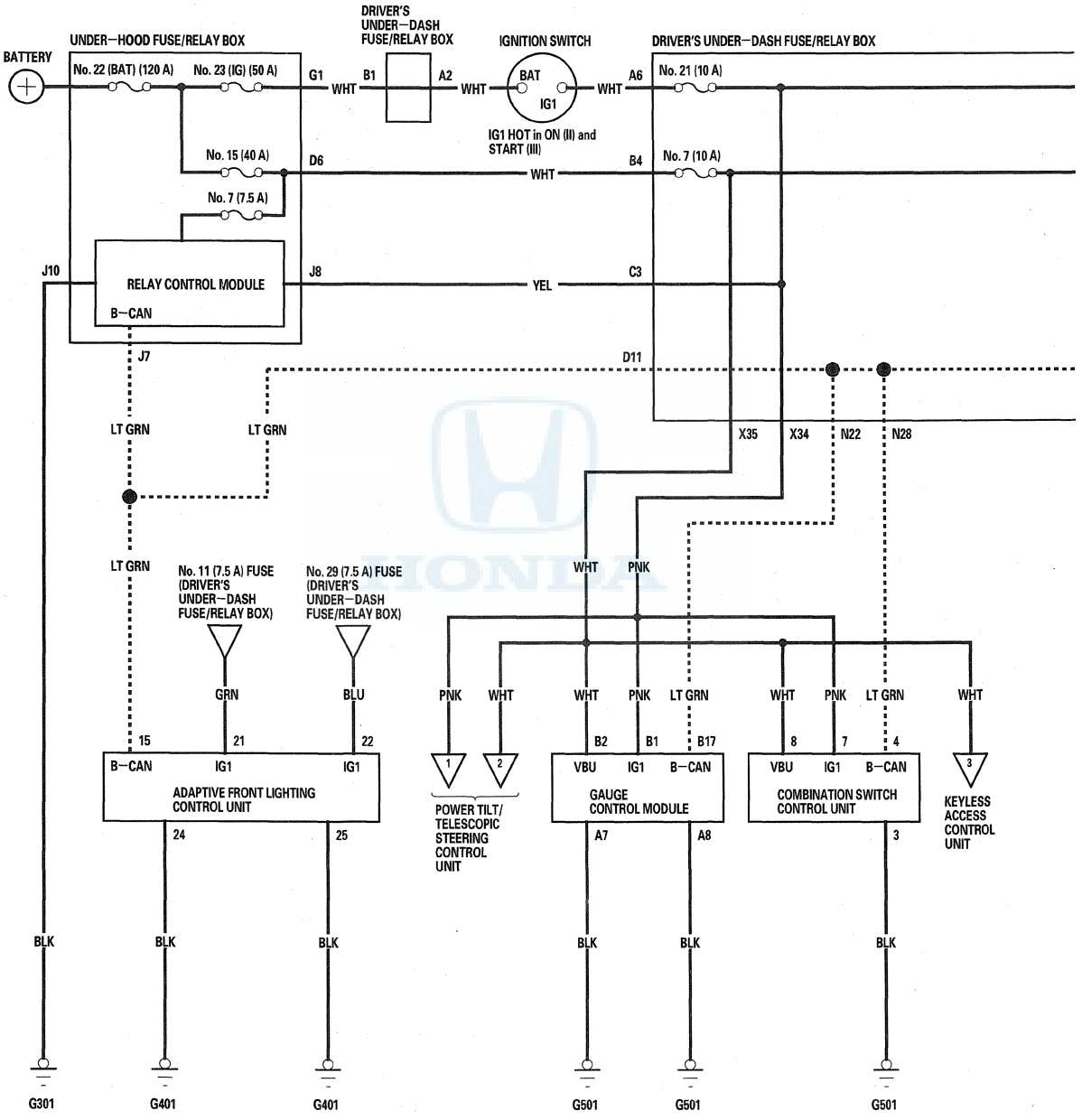

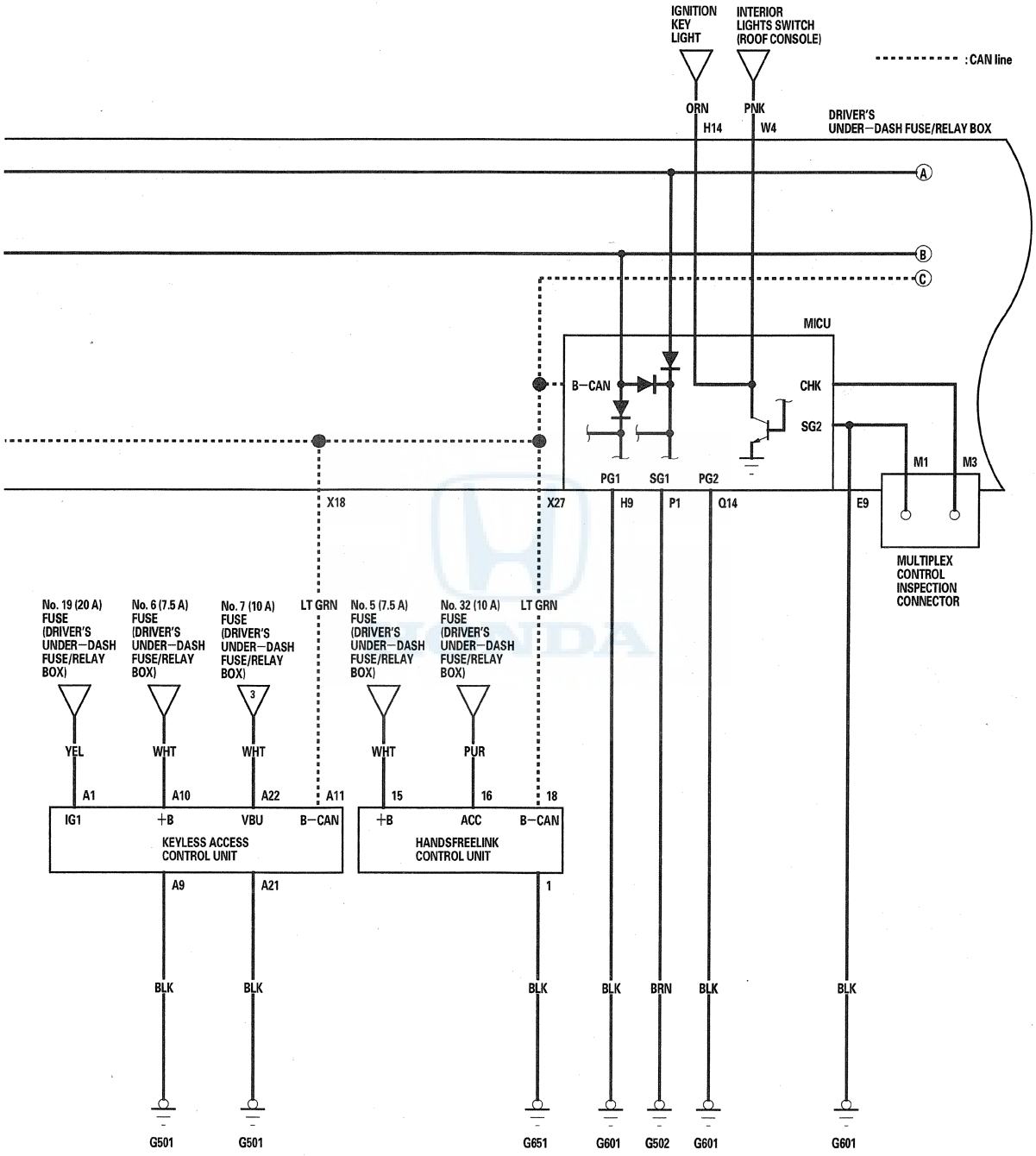
IGNITION KEY LIGHT
INTERIOR LIGHTS SWITCH (ROOF CONSOLE)
: CAN line
ORN
H14
PNK
W4
DRIVER'S UNDER-DASH FUSE/RELAY BOX
A
B
C
MICU
B-CAN
CHK
SG2
PG1
SG1
PG2
M1
M3
X18
X27
H9
P1
Q14
E9
MULTIPLEX CONTROL INSPECTION CONNECTOR
No. 19 (20 A) FUSE (DRIVER'S UNDER-DASH FUSE/RELAY BOX)
No. 6 (7.5 A) FUSE (DRIVER'S UNDER-DASH FUSE/RELAY BOX)
No. 7 (10 A) FUSE (DRIVER'S UNDER-DASH FUSE/RELAY BOX)
LT GRN
No. 5 (7.5 A) FUSE (DRIVER'S UNDER-DASH FUSE/RELAY BOX)
No. 32 (10 A) FUSE (DRIVER'S UNDER-DASH FUSE/RELAY BOX)
LT GRN
YEL
WHT
WHT
WHT
PUR
A1
A10
A22
A11
15
16
18
IG1
+B
VBU
B-CAN
+B
ACC
B-CAN
KEYLESS ACCESS CONTROL UNIT
HANDSFREELINK CONTROL UNIT
A9
A21
1
BLK
BLK
BLK
BLK
BRN
BLK
BLK
G501
G501
G651
G601
G502
G601
G601

(cont'd)

Circuit Diagram (cont'd)

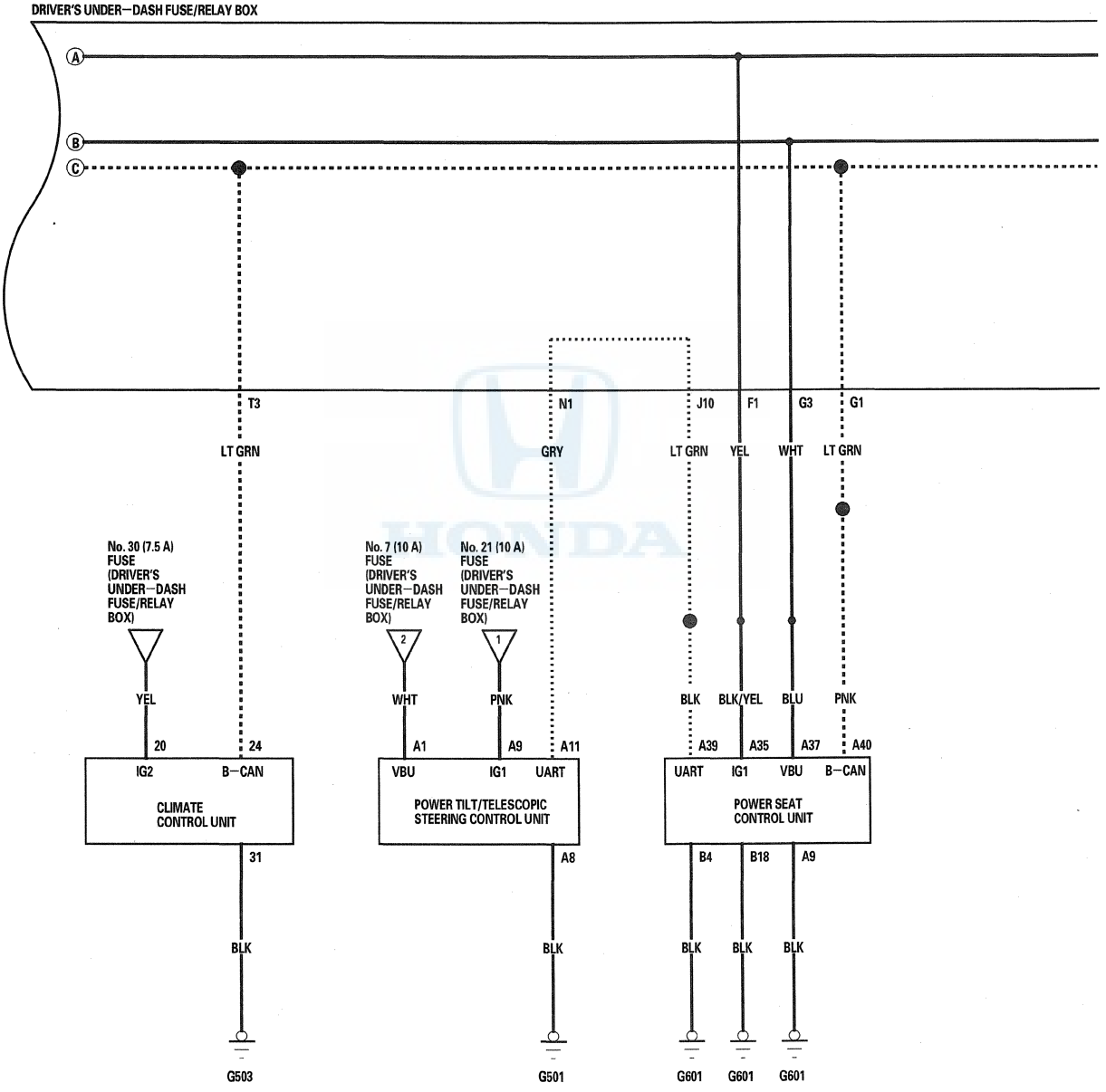

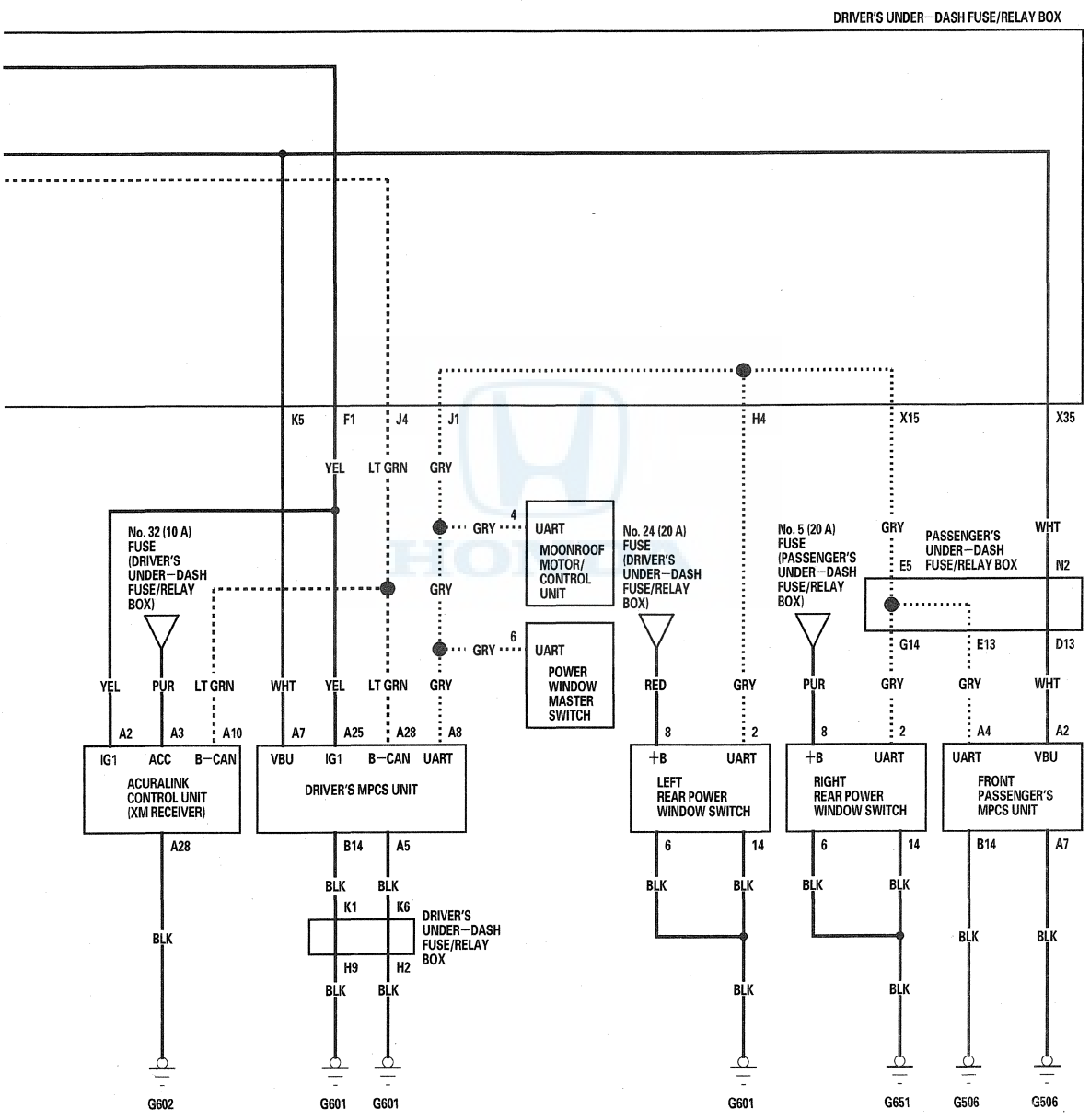
: CAN line
: Other communication line
DRIVER'S UNDER–DASH FUSE/RELAY BOX
K5
F1
J4
J1
H4
X15
X35
YEL
LT GRN
GRY
No. 32 (10 A) FUSE (DRIVER'S UNDER–DASH FUSE/RELAY BOX)
4
GRY
UART
MOONROOF MOTOR/ CONTROL UNIT
6
GRY
UART
POWER WINDOW MASTER SWITCH
No. 24 (20 A) FUSE (DRIVER'S UNDER–DASH FUSE/RELAY BOX)
No. 5 (20 A) FUSE (PASSENGER'S UNDER–DASH FUSE/RELAY BOX)
GRY
E5
PASSENGER'S UNDER–DASH FUSE/RELAY BOX
WHT
N2
G14
E13
D13
YEL
PUR
LT GRN
WHT
YEL
LT GRN
GRY
RED
GRY
PUR
GRY
GRY
WHT
A2
A3
A10
A7
A25
A28
A8
8
2
8
2
A4
A2
IG1
ACC
B–CAN
VBU
IG1
B–CAN
UART
+B
UART
+B
UART
UART
VBU
ACURALINK CONTROL UNIT (XM RECEIVER)
DRIVER'S MPCS UNIT
LEFT REAR POWER WINDOW SWITCH
RIGHT REAR POWER WINDOW SWITCH
FRONT PASSENGER'S MPCS UNIT
A28
B14
A5
6
14
6
14
B14
A7
BLK
BLK
BLK
BLK
BLK
BLK
BLK
BLK
BLK
BLK
K1
K6
DRIVER'S UNDER–DASH FUSE/RELAY BOX
H9
H2
BLK
BLK
BLK
BLK
BLK
G602
G601
G601
G601
G651
G506
G506

DTC Troubleshooting

DTC B1000: Communication Bus Line Error (BUS-OFF)

NOTE: If you are troubleshooting multiple DTCs, be sure to follow the instructions in B-CAN System Diagnosis Test Mode A (see page 22-131).

1. Clear the DTCs with the HDS.
2. Turn the ignition switch to LOCK (0) and then back to ON (II).
3. Wait for at least 6 seconds.
4. Check for DTCs with the HDS.

   Is DTC B1000 indicated?

   YES—Go to step 5.

   NO—Intermittent failure, the communication bus line is OK at this time. Check for loose or poor connections, or worn/shorted wires. If the connections are good, check the battery condition (see page 22-90) and the charging system. ■
5. Check for DTCs with the HDS.

   Are DTCs B1005, B1007, B1008, B1011, B1013, B1014, B1015, and B1016 also indicated?

   YES—Go to step 6.

   NO—Faulty MICU; replace the driver's under-dash fuse/relay box (see page 22-88). ■
6. Disconnect the appropriate connector at each control unit in the table one at a time. Clear the DTC and wait for at least 6 seconds, then recheck for DTCs after each unit is disconnected.

Control Unit	Appropriate Connector
Gauge Control Module	Connector B (28P)
Relay Control Module	Connector J (10P)
Driver's MPCS Unit	Connector A (40P)
Combination Switch Control Unit	Connector (8P)
Power Seat Control Unit	Connector A (40P)
Climate Control Unit	Connector (40P)
HandsFreeLink Control Unit	Connector (22P)
AcuraLink Control Unit (XM receiver)	Connector B (16P)
Adaptive Front Lighting Control Unit	Connector (40P)
Keyless Access Control Unit	Connector A (31P)

   Is DTC B1000 indicated with each individual unit disconnected?

   YES—Go to step 7.

   NO—Replace the control unit that was disconnected and B1000 did not reset. ■
7. Disconnect all of the appropriate connectors for each of the units in the table.

Control Unit	Appropriate Connector
Gauge Control Module	Connector B (28P)
Relay Control Module	Connector J (10P)
Driver's MPCS Unit	Connector A (40P)
Combination Switch Control Unit	Connector (8P)
Power Seat Control Unit	Connector A (40P)
Climate Control Unit	Connector (40P)
HandsFreeLink Control Unit	Connector (22P)
AcuraLink Control Unit (XM receiver)	Connector B (16P)
Adaptive Front Lighting Control Unit	Connector (40P)
Keyless Access Control Unit	Connector A (31P)

8. Disconnect driver's under-dash fuse/relay box connectors X (39P), N (45P), J (30P), G (8P), D (17P), and T (6P).

9. Check for continuity between each of the driver's under-dash fuse/relay box terminals listed in the table below and body ground.

Connected Control Unit	Driver's under-dash fuse/relay box terminal
Gauge Control Module	N22
Relay Control Module	D11
Driver's MPCS Unit	J4
Combination Switch Control Unit	N28
Power Seat Control Unit	G1
Climate Control Unit	T3
HandsFreeLink Control Unit	X27
AcuraLink Control Unit (XM receiver)	J4
Adaptive Front Lighting Control Unit	D11
Keyless Access Control Unit	X18

Is there continuity?

YES—Repair the short in the wire between the driver's under-dash fuse/relay box and affected control unit. ■

NO—Replace the driver's under-dash fuse/relay box (see page 22-88). ■

DTC Troubleshooting (cont'd)

DTC B1001: MICU Internal (CPU) Error

DTC B1002: MICU Internal (EEPROM) Error

NOTE: If you are troubleshooting multiple DTCs, be sure to follow the instructions in B-CAN System Diagnosis Test Mode A (see page 22-131).

1. Clear the DTCs with the HDS.
2. Turn the ignition switch to LOCK (0) and then back to ON (II).
3. Wait for at least 6 seconds.
4. Check for DTCs with the HDS.

   Is DTC B1001 and/or B1002 indicated?

   YES—Faulty MICU, replace the driver's under-dash fuse/relay box (see page 22-88). ■

   NO—Intermittent failure, the system is OK at this time. Check for loose or poor connections. If all connections are good, check battery condition (see page 22-90) and the charging system. ■

DTC B1005: MICU Lost Communication With Relay Control Module (RM Message)

NOTE: If you are troubleshooting multiple DTCs, be sure to follow the instructions in B-CAN System Diagnosis Test Mode A (see page 22-131).

1. Clear the DTCs with the HDS.
2. Turn the ignition switch to LOCK (0) and then back to ON (II).
3. Wait for at least 6 seconds.
4. Check for DTCs with the HDS.

   Is DTC B1005 indicated?

   YES—Go to step 5.

   NO—Intermittent failure, the system is OK at this time. Check for loose or poor connections between the relay control module and driver's under-dash fuse/relay box. If the connections are good, check the battery condition (see page 22-90) and the charging system. ■

5. Check for DTCs with the HDS.

   Is DTC B1158 also indicated?

   YES—Do the relay control module input test (see page 22-158). ■

   NO—Check for an open in the communication circuit between the MICU and the relay control module. If the circuit is OK, replace the MICU. If the circuit is bad, repair the open. ■

DTC B1007: MICU Lost Communication With Combination Switch Control Unit (HLSW Message)

NOTE: If you are troubleshooting multiple DTCs, be sure to follow the instructions in B-CAN System Diagnosis Test Mode A (see page 22-131).

1. Clear the DTCs with the HDS.
2. Turn the ignition switch to LOCK (0) and then back to ON (II).
3. Wait for at least 6 seconds.
4. Check for DTCs with the HDS.

   Is DTC B1007 indicated?

   YES—Go to step 5.

   NO—Intermittent failure, the system is OK at this time. Check for loose or poor connections between the MICU and combination switch control unit, if the connections are good, check the battery condition (see page 22-90) and the charging system. ■
5. Check for DTCs with the HDS.

   Are DTCs B1062, B1155, and B2108 all indicated?

   YES—Do the combination switch control unit input test (see page 22-157). ■

   NO—Check for an open in the communication circuit between the MICU and the gauge control module. If the circuit is OK, replace the MICU. If the circuit is bad, repair the open. ■

DTC B1008: MICU Lost Communication With Gauge Control Module (A/T Message)

DTC B1011: MICU Lost Communication With Gauge Control Module (VSP/NE Message)

NOTE: If you are troubleshooting multiple DTCs, be sure to follow the instructions in B-CAN System Diagnosis Test Mode A (see page 22-131).

1. Clear the DTCs with the HDS.
2. Turn the ignition switch to LOCK (0) and then back to ON (II).
3. Wait for at least 6 seconds.
4. Check for DTCs with the HDS.

   Is DTC B1008 and/or B1011 indicated?

   YES—Go to step 5.

   NO—Intermittent failure, the system is OK at this time. Check for loose or poor connections between the MICU and gauge control module, if the connections are good, check the battery condition (see page 22-90) and the charging system. ■
5. Check for DTCs with the HDS.

   Are DTCs B1060, B1061, B1205, B1616, B1805, B1808, B2106, and B2160 all indicated?

   YES—Do the gauge control module input test (see page 22-155). ■

   NO—Check for an open in the communication circuit between the MICU and the gauge control module. If the circuit is OK, replace the MICU. If the circuit is bad, repair the open. ■

DTC Troubleshooting (cont'd)

DTC B1013: MICU Lost Communication With Driver's MPCS Unit (ASLOCKSW Message)

DTC B1014: MICU Lost Communication With Driver's MPCS Unit (DOORSW Message)

DTC B1015: MICU Lost Communication With Driver's MPCS Unit (DRLOCKSW Message)

NOTE: If you are troubleshooting multiple DTCs, be sure to follow the instructions in B-CAN System Diagnosis Test Mode A (see page 22-131).

1. Clear the DTCs with the HDS.
2. Turn the ignition switch to LOCK (0) and then back to ON (II).
3. Wait for at least 6 seconds.
4. Check for DTCs with the HDS.

   Is DTCs B1013, B1014, and/or B1015 indicated?

   YES—Go to step 5.

   NO—Intermittent failure, the system is OK at this time. Check for loose or poor connections between the MICU and driver's MPCS unit. ■
5. Check for DTCs with the HDS.

   Are DTCs B1064 B1065, B1181, B1182, B1613, B1614, B1615, and B1811 all indicated?

   YES—Do the driver's MPCS unit input test (see page 22-159). ■

   NO—Check for an open in the communication circuit between the MICU and the gauge control module. If the circuit is OK, replace the MICU. If the circuit is bad, repair the open. ■

DTC B1016: MICU Lost Communication With Keyless Access Control Unit (PANIC Message)

NOTE: If you are troubleshooting multiple DTCs, be sure to follow the instructions in B-CAN System Diagnosis Test Mode A (see page 22-131).

1. Clear the DTCs with the HDS.
2. Turn the ignition switch to LOCK (0) and then back to ON (II).
3. Wait for at least 6 seconds.
4. Check for DTCs with the HDS.

   Is DTC B1016 indicated?

   YES—Go to step 5.

   NO—Intermittent failure, the system is OK at this time. Check for loose or poor connections between the MICU and keyless access control unit. ■
5. Check for DTCs with the HDS.

   Is DTCs B1066 also indicated?

   YES—Do the keyless access control unit input test (see page 22-623). ■

   NO—Check for an open in the communication circuit between the MICU and the gauge control module. If the circuit is OK, replace the MICU. If the circuit is bad, repair the open. ■

DTC B1032: MICU Collision Detection Signal (CDS) Input Error

NOTE:
- Before doing this troubleshooting, review SRS Precautions and Procedures (see page 24-14) and General Troubleshooting Information (see page 24-23).
- If you are troubleshooting multiple DTCs, be sure to follow the instructions in B-CAN System Diagnosis Test Mode A (see page 22-131).

1. Clear the DTC with the HDS.
2. Turn the ignition switch to LOCK (0) and then back to ON (II).
3. Check for DTC with the HDS.

   Is DTC B1032 indicated?

   YES—Go to step 4.
   NO—Intermittent failure, the system is OK at this time. Go to Troubleshooting Intermittent Failures (see page 24-25).
4. Turn the ignition switch to LOCK (0).
5. Do the battery terminal disconnection procedure (see page 22-91).
6. Disconnect SRS unit connector A (28P) from the SRS unit (see step 7 on page 24-21).
7. Disconnect driver's under-dash fuse/relay box connector P (30P).
8. Measure the resistance between SRS unit connector A (28P) terminal No. 21 and under-dash fuse/relay box connector P (30P) terminal No. 21. There should be 0—1.0 Ω.

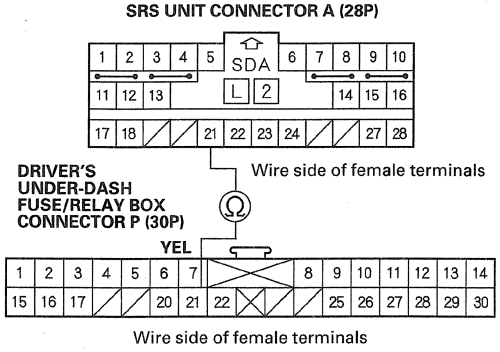

   Is the resistance as specified?

   YES—Go to step 9.

   NO—There is an open in the BLU (YEL) wire of dashboard wire harness; replace dashboard wire harness. ■
9. Measure the resistance between SRS unit connector A (28P) terminal No. 21 and body ground. There should be an open circuit or at least 1 MΩ.

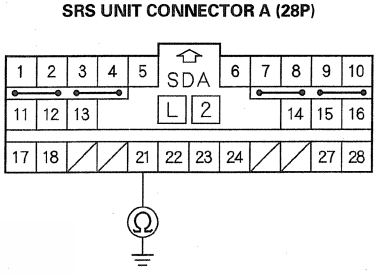

   Is the resistance as specified?

   YES—Go to step 10.

   NO—There is a short to ground in the dashboard wire harness; replace dashboard wire harness.
10. Measure the voltage between SRS unit connector A (28P) terminal No. 21 and body ground. There should be 0.1 V or less.

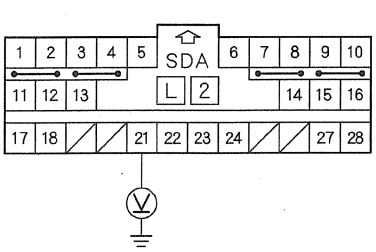

   Is the voltage as specified?

   YES—Replace the SRS unit (see page 24-215). ■

   NO—There is a short to power in the dashboard wire harness; replace dashboard wire harness. ■

DTC Troubleshooting (cont'd)

DTC B1050: Communication Bus Line Error

DTC B1150: Communication Bus Line Error

DTC B1200: Communication Bus Line Error

DTC B1250: Communication Bus Line Error

DTC B1600: Communication Bus Line Error

DTC B1750: Communication Bus Line Error

DTC B1800: Communication Bus Line Error

DTC B2100: Communication Bus Line Error

DTC B2150: Communication Bus Line Error

DTC B2200: Communication Bus Line Error

NOTE: If you are troubleshooting multiple DTCs, be sure to follow the instructions in B-CAN System Diagnosis Test Mode A (see page 22-131).

1. Clear the DTCs with the HDS.
2. Turn the ignition switch to LOCK (0) and then back to ON (II).
3. Wait for at least 6 seconds.
4. Check for DTCs with the HDS.

   Are DTCs B1050, B1150, B1200, B1250, B1600, B1750, B1800, B2100, B2150, and/or B2200 indicated?

   YES—Go to step 5.

   NO—Intermittent failure, the system is OK at this time. Check for loose or poor connections at the MICU and B-CAN connected units in the table. ■

5. Check for DTCs with the HDS.

Driver's under-dash fuse/relay box connector	B-CAN connected unit connector
Connector D (17P) terminal No. 11	Under-hood fuse/relay box connector J (10P) terminal No. 7
Connector D (17P) terminal No. 11	Adaptive front lighting control unit 40P connector terminal No. 15
Connector N (45P) terminal No. 22	Gauge control module connector B (28P) terminal No. 17
Connector N (45P) terminal No. 28	Combination switch control unit 8P connector terminal No. 4
Connector J (21P) terminal No. 4	Driver's MPCS unit connector A (40P) terminal No. 28
Connector X (39P) terminal No. 18	Keyless access control unit connector A (31P) terminal No. 11
Connector T (6P) terminal No. 3	Climate control unit 40P connector terminal No. 24
Connector X (39P) terminal No. 27	HandsFreeLink control unit 28P connector terminal No. 18
Connector G (6P) terminal No. 1	Power seat control unit connector A (40P) terminal No. 40
Connector J (21P) terminal No. 4	AcuraLink control unit (XM receiver) connector A (32P) terminal No. 10

Is DTC B1000 also indicated?

YES—Troubleshoot DTC B1000 (see page 22-142). ■

NO—Intermittent failure, the system is OK at this time. Check for loose or poor connections at the MICU and B-CAN connected units in the table. ■

DTC B1080: Power Supply Circuit (IG1 Line) Input Error for Relay Control Module and MICU

NOTE: If you are troubleshooting multiple DTCs, be sure to follow the instructions in B-CAN System Diagnosis Test Mode A (see page 22-131).

1. Clear the DTC with the HDS.
2. Turn the ignition switch to LOCK (0) and then back to ON (II).
3. Wait for at least 6 seconds.
4. Check for DTCs with the HDS.

   Is DTC B1080 indicated?

   YES—Go to step 5.

   NO—Intermittent failure, check for loose or poor connections at under-hood fuse/relay box connector J (10P) and driver's under-dash fuse/relay box connector D (17P). If the connections are OK, check the battery condition (see page 22-90) and the charging system. ■
5. Check the MICU IG1 power supply No. 21 (10 A) fuse in the driver's under-dash fuse/relay box.

   Is the fuse OK?

   YES—Go to step 6.

   NO—Replace the fuse, and recheck for DTCs. ■
6. Turn the ignition switch to LOCK (0).
7. Disconnect under-hood fuse/relay box connector J (10P), check for loose or poor connections. If the terminals are bent, loose or corroded, repair them as necessary and recheck the system.
8. Reconnect under-hood fuse/relay box connector J (10P).
9. Turn the ignition switch to ON (II).
10. Measure the voltage between under-hood fuse/relay box connector J (10P) terminal No. 8 and body ground.

UNDER-HOOD FUSE/RELAY BOX CONNECTOR J (10P)

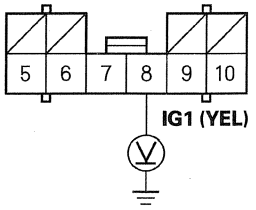

Wire side of female terminals

Is there battery voltage?

YES—Go to step 11.

NO—Open, or loose connection, in the wire between the under-hood fuse/relay box and driver's under-dash fuse/relay box. Repair the wire, and recheck for DTCs. ■

11. Measure the voltage between under-hood fuse/relay box connector J (10P) terminal No. 10 and body ground.

UNDER-HOOD FUSE/RELAY BOX CONNECTOR J (10P)

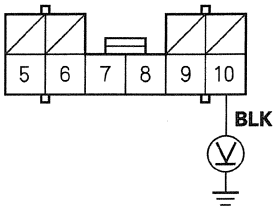

Wire side of female terminals

Is there less than 0.2 V?

YES—Faulty relay control module; replace the under-hood fuse/relay box. ■

NO—Repair open in the wire between the under-hood fuse/relay box and G301. If the wire is OK, inspect G301. ■

DTC Troubleshooting (cont'd)

DTC B2152: Driver's MPCS Unit Internal (EEPROM) Error

NOTE: If you are troubleshooting multiple DTCs, be sure to follow the instructions in B-CAN System Diagnosis Test Mode A (see page 22-131).

1. Clear the DTCs with the HDS.
2. Turn the ignition switch to LOCK (0) and then back to ON (II).
3. Wait for at least 6 seconds.
4. Check for DTCs with the HDS.

   Is DTC B2152 indicated?

   YES—Replace the driver's MPCS unit. ■

   NO—Intermittent failure, the system is OK at this time. ■

DTC B2155: Driver's MPCS Unit Lost Communication With MICU (MICU Message)

DTC B2156: Driver's MPCS Unit Lost Communication With MICU (MIRRORSW Message)

NOTE: If you are troubleshooting multiple DTCs, be sure to follow the instructions in B-CAN System Diagnosis Test Mode A (see page 22-131).

1. Clear the DTCs with the HDS.
2. Turn the ignition switch to LOCK (0) and then back to ON (II).
3. Wait for at least 6 seconds.
4. Check for DTCs with the HDS.

   Are DTCs B2155 and/or B2156 indicated?

   YES—Go to step 5.

   NO—Intermittent failure, the system is OK at this time. Check for loose or poor connections between the driver's MPCS unit and MICU. ■

5. Check for DTCs with the HDS.

   Are DTCs B1055, B1157, B1255, B1605, B1806, B1810, B1855, and/or B2107 also indicated?

   YES—Faulty MICU, replace the driver's under-dash fuse/relay box (see page 22-88). ■

   NO—Do the driver's MPCS unit input test (see page 22-159). ■

DTC B2157: Driver's MPCS Unit Lost Communication With Gauge Control Module (ILLUMI Message)

DTC B2160: Driver's MPCS Unit Lost Communication With Gauge Control Module (VSP/NE Message)

NOTE: If you are troubleshooting multiple DTCs, be sure to follow the instructions in B-CAN System Diagnosis Test Mode A (see page 22-131).

1. Clear the DTCs with the HDS.
2. Turn the ignition switch to LOCK (0) and then back to ON (II).
3. Wait for at least 6 seconds.
4. Check for DTCs with the HDS.

   Is DTC B2157 and/or B2160 indicated?

   YES—Go to step 5.

   NO—Intermittent failure, the system is OK at this time. Check for loose or poor connections between the driver's MPCS unit and the gauge control module. ■
5. Check for DTCs with the HDS.

   Are DTCs B1011, B1060, B1205, B1207, and/or B1805 also indicated?

   YES—Do the gauge control module input test (see page 22-155). ■

   NO—Do the driver's MPCS unit input test (see page 22-159). ■

DTC B2159: Driver's MPCS Unit Lost Communication With Keyless Access Control Unit (REMOTE Message)

NOTE: If you are troubleshooting multiple DTCs, be sure to follow the instructions in B-CAN System Diagnosis Test Mode A (see page 22-131).

1. Clear the DTCs with the HDS.
2. Turn the ignition switch to LOCK (0) and then back to ON (II).
3. Check for DTCs with the HDS.

   Is DTC B2159 indicated?

   YES—Go to step 4.

   NO—Intermittent failure, the system is OK at this time. Check for loose or poor connections. ■
4. Check for DTCs with the HDS.

   Is DTC B1161 also indicated?

   YES—Do the keyless access control unit input test (see page 22-623). ■

   NO—Do the driver's MPCS unit input test (see page 22-159). ■

MICU Input Test

1. Turn the ignition switch to LOCK (0).
2. Remove the left kick panel (see page 20-67).
3. Disconnect driver's under-dash fuse/relay box connectors D, E, G, H, J, N, P, Q, T, W, and X.

   NOTE: All connector views are wire side of female terminals.

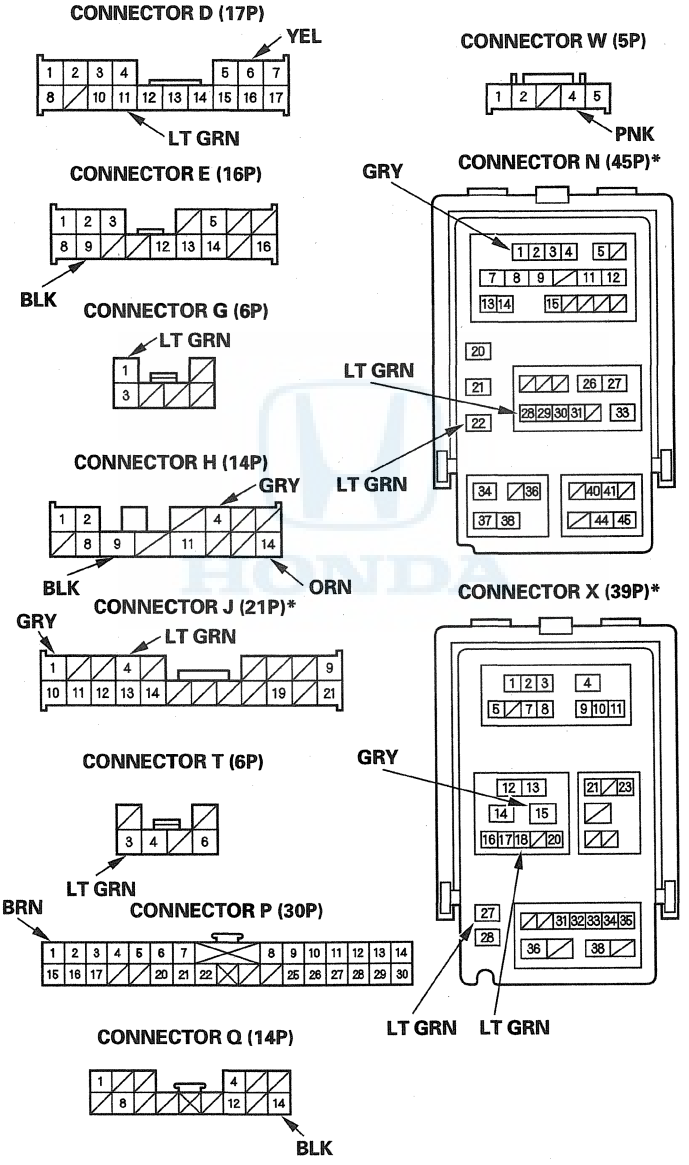

*Connector view shown rotated 180 ° from actual position in the under-dash fuse/relay box.

4. Inspect the connector and socket terminals to be sure they are all making good contact.

   - If the terminals are bent, loose or corroded, repair them as necessary and recheck the system.
   - If the terminals look OK, go to step 5.

5. With the connectors still disconnected, do these input tests at the following connectors.

   - If any test indicates a problem, find and correct the cause, then recheck the system.
   - If all the input tests prove OK, go to step 6.

Cavity	Wire	Test condition	Test: Desired result	Possible cause if desired result is not obtained
H14	ORN	Ignition switch ON (II)	Attach to ground: The ignition key light should come on.	• Blown No. 13 (15 A) fuse in the under-hood fuse/relay box • Faulty ignition key light • An open in the wire
W4	PNK	Interior lights switch (in the roof console) DOOR switch pushed	Attach to ground: The individual map lights should come on.	• Blown No. 6 (7.5 A) fuse in the driver's under-dash fuse/relay box • Faulty map light • Faulty roof console • An open in the wire
D11	LT GRN	Under all conditions (Relay control module connector J (10P) and adaptive front lighting control unit 40P connector disconnected)	Check for continuity between terminal D11 and relay control module connector J (10P) terminal No. 7, and terminal D11 and adaptive front lighting control unit 40P connector terminal No. 15: There should be continuity.	An open in the wire
			Check for continuity to ground: There should be no continuity.	A short to ground in the wire
N1	GRY	Under all conditions (Power tilt/telescopic steering control unit connector A (16P) disconnected)	Check for continuity between terminal N1 and power tilt/telescopic steering control unit connector A (16P) terminal No. 11: There should be continuity.	An open in the wire
			Check for continuity to ground: There should be no continuity.	A short to ground in the wire
N22	LT GRN	Under all conditions (Gauge control module connector B (28P) disconnected)	Check for continuity between terminal N22 and gauge control module connector B (28P) terminal No. 17: There should be continuity.	An open in the wire
			Check for continuity to ground: There should be no continuity.	A short to ground in the wire
N28	LT GRN	Under all conditions (Wiper/washer switch 8P connector disconnected)	Check for continuity between terminal N28 and combination switch control unit 8P connector terminal No. 4: There should be continuity.	An open in the wire
			Check for continuity to ground: There should be no continuity.	A short to ground in the wire
J4	LT GRN	Under all conditions (Driver's MPCS unit connector A (40P) and AcuraLink control unit (XM receiver) connector A (32P) disconnected)	Check for continuity between terminal J4 and driver's MPCS unit connector A (40P) terminal No. 4 and terminal J4 and AcuraLink control unit (XM receiver) connector A (32P) terminal No. 10: There should be continuity.	An open in the wire
			Check for continuity to ground: There should be no continuity.	A short to ground in the wire
G1	LT GRN	Under all conditions (Power seat control unit connector A (40P) disconnected)	Check for continuity between terminal G1 and power seat control unit connector A (40P) terminal No. 40: There should be continuity.	An open in the wire
			Check for continuity to ground: There should be no continuity.	A short to ground in the wire

(cont'd)

MICU Input Test (cont'd)

Cavity	Wire	Test condition	Test: Desired result	Possible cause if desired result is not obtained
T3	LT GRN	Under all conditions (Climate control unit 40P connector disconnected)	Check for continuity between terminal T3 and climate control unit 40P connector terminal No. 24: There should be continuity.	An open in the wire
			Check for continuity to ground: There should be no continuity.	A short to ground in the wire
X18	LT GRN	Under all conditions (Keyless access control unit connector A (31P) disconnected)	Check for continuity between terminal X18 and keyless access control unit connector A (31P) terminal No. 11: There should be continuity.	An open in the wire
			Check for continuity to ground: There should be no continuity.	A short to ground in the wire
X27	LT GRN	Under all conditions (HandsFreeLink control unit connector (28P) disconnected)	Check for continuity between terminal X27 and HandsFreeLink control unit connector (28P) terminal No. 18: There should be continuity.	An open in the wire
			Check for continuity to ground: There should be no continuity.	A short to ground in the wire
J1	GRY	Under all conditions (Driver's MPCS unit connector A (40P), power window master switch 6P connector, and moonroof motor/control unit 10P connector disconnected)	Check for continuity between terminal J1 and driver's MPCS unit connector A (40P) terminal No. 8, terminal H4 and power window master switch 6P connector terminal No. 6, moonroof motor/control unit 10P connector terminal No. 4: There should be continuity.	An open in the wire
			Check for continuity to ground: There should be no continuity.	A short to ground in the wire
H4	GRY	Under all conditions (Left rear power window switch 14P connector disconnected)	Check for continuity between terminal H4 and left rear power window switch 14P connector terminal No. 2: There should be continuity.	An open in the wire
			Check for continuity to ground: There should be no continuity.	A short to ground in the wire
X15	GRY	Under all conditions (Front passenger's MPCS unit connector A (28P) and right rear power window switch 14P connector disconnected)	Check for continuity between terminal X15 and front passenger's MPCS unit connector A (28P) terminal No. 4, and terminal X15 and right rear power window switch 14P connector terminal No. 2: There should be continuity.	An open in the wire
			Check for continuity to ground: There should be no continuity.	A short to ground in the wire

6. Reconnect the connectors to the driver's under-hood fuse/relay box, and do these input tests at the following connectors.

- If any test indicates a problem, find and correct the cause, then recheck the system.
- If all the input tests prove OK, go to step 7.

Cavity	Wire	Test condition	Test: Desired result	Possible cause if desired result is not obtained
P1	BRN	Under all conditions	Measure the voltage to ground: There should be less than 0.2 V.	• Poor ground (G502) • An open in the wire
E9	BLK	Under all conditions	Measure the voltage to ground: There should be less than 0.2 V.	• Poor ground (G601) • An open in the wire
H9	BLK	Under all conditions	Measure the voltage to ground: There should be less than 0.2 V.	• Poor ground (G601) • An open in the wire
Q14	BLK	Under all conditions	Measure the voltage to ground: There should be less than 0.2 V.	• Poor ground (G601) • An open in the wire

7. If multiple failures are found on more than one control unit, replace the driver's under-dash fuse/relay box (includes the MICU) (see page 22-88). If input failures are related to a particular control unit, replace the control unit.

Gauge Control Module Input Test

1. Turn the ignition switch to LOCK (0).
2. Remove the gauge control module (see page 22-419).
3. Disconnect gauge control module connectors A (20P) and B (28P).

GAUGE CONTROL MODULE CONNECTOR A (20P)

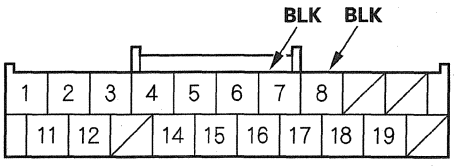

Wire side of female terminals

GAUGE CONTROL MODULE CONNECTOR B (28P)

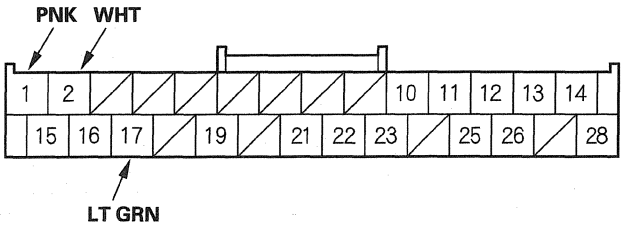

Wire side of female terminals

4. Inspect the connector and socket terminals to be sure they are all making good contact.
   - If the terminals are bent, loose or corroded, repair them as necessary and recheck the system.
   - If the terminals look OK, go to step 5.
5. Reconnect the connectors to the gauge control module, and do these input tests at the following connectors.
   - If any test indicates a problem, find and correct the cause, then recheck the system.
   - If all the input tests prove OK, go to step 6.

Cavity	Wire	Test condition	Test: Desired result	Possible cause if desired result is not obtained
A7	BLK	Under all conditions	Measure the voltage to ground: There should be less than 0.2 V.	• Poor ground (G501) • An open in the wire
A8	BLK	Under all conditions	Measure the voltage to ground: There should be less than 0.2 V.	• Poor ground (G501) • An open in the wire
B1	PNK	Ignition switch ON (II)	Measure the voltage to ground: There should be battery voltage.	• Blown No. 21 (10 A) fuse in the driver's under-dash fuse/relay box • An open in the wire
B2	WHT	Under all conditions	Measure the voltage to ground: There should be battery voltage.	• Blown No. 15 (40 A) fuse in the under-hood fuse/relay box • Blown No. 7 (10 A) fuse in the driver's under-dash fuse/relay box • An open in the wire

(cont'd)

Gauge Control Module Input Test (cont'd)

6. Disconnect gauge control module connectors A (20P) and B (28P), and do these input tests at the following connector.

   - If any test indicates a problem, find and correct the cause, then recheck the system.
   - If all the input tests prove OK, replace the gauge control module (see page 22-419).

Cavity	Wire	Test condition	Test: Desired result	Possible cause if desired result is not obtained
B17	LT GRN	Driver's under-dash fuse/relay box connector N (45P) disconnected	Check for continuity between terminal B17 and driver's under-dash fuse/relay box connector N (45P) terminal No. 22: There should be continuity.	An open in the wire
			Check for continuity to ground: There should be no continuity.	A short to ground in the wire

Combination Switch Control Unit Input Test

1. Turn the ignition switch to LOCK (0), remove the driver's dashboard undercover (see page 20-100), and the driver's dashboard lower cover (see page 20-100), then remove the steering column covers (see page 17-25).

2. Disconnect the 8P connector from the wiper/washer switch (combination switch control unit).

COMBINATION SWITCH CONTROL UNIT 8P CONNECTOR

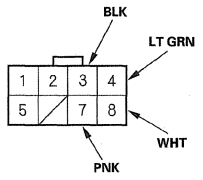

Wire side of female terminals

3. Inspect the connector and socket terminals to be sure they are all making good contact.
   - If the terminals are bent, loose or corroded, repair them as necessary, and recheck the system.
   - If the terminals look OK, go to step 4.

4. Reconnect the connector to the wiper/washer switch, and do these input tests at the following connector.
   - If any test indicates a problem, find and correct the cause, then recheck the system.
   - If all the input tests prove OK, go to step 5.

Cavity	Wire	Test condition	Test: Desired result	Possible cause if desired result is not obtained
3	BLK	Under all conditions	Measure the voltage to ground: There should be less than 0.2 V.	• Poor ground (G501) • An open in the wire
8	WHT	Under all conditions	Measure the voltage to ground: There should be battery voltage.	• Blown No. 15 (40 A) fuse in the under-hood fuse/relay box • Blown No. 7 (10 A) fuse in the driver's under-dash fuse/relay box • An open in the wire
7	PNK	Ignition switch ON (II)	Measure the voltage to ground: There should be battery voltage.	• Blown No. 21 (10 A) fuse in the driver's under-dash fuse/relay box • An open in the wire

5. Disconnect the 8P connector from the wiper/washer switch, and do these input tests at the following connector.
   - If any test indicates a problem, find and correct the cause, then recheck the system.
   - If all the input tests prove OK, the combination switch control unit must be faulty, replace the wiper/washer switch.

Cavity	Wire	Test condition	Test: Desired result	Possible cause if desired result is not obtained
4	LT GRN	Under all conditions	Check for continuity between terminal No. 4 and driver's under-dash fuse/relay box connector N (45P) terminal No. 28: There should be continuity.	An open in the wire
		Under all conditions (Driver's under-dash fuse/relay box connector N (45P) disconnected)	Check for continuity to ground: There should be no continuity.	A short to ground in the wire

Relay Control Module Input Test

1. Turn the ignition switch to LOCK (0), and remove the under-hood fuse/relay box under cover (see page 22-84).
2. Disconnect under-hood fuse/relay box connector J (10P).

UNDER-HOOD FUSE/RELAY BOX CONNECTOR J (10P)

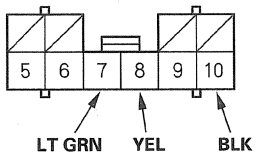

Wire side of female terminals

3. Inspect the connector and socket terminals to be sure they are all making good contact.
   - If the terminals are bent, loose or corroded, repair them as necessary, and recheck the system.
   - If the terminals look OK, go to step 4.
4. Reconnect the connector to the under-hood fuse/relay box, and do these input tests at the following connector.
   - If any test indicates a problem, find and correct the cause, then recheck the system.
   - If all the input tests prove OK, go to step 5.

Cavity	Wire	Test condition	Test: Desired result	Possible cause if desired result is not obtained
J10	BLK	Under all conditions	Measure the voltage to ground: There should be less than 0.2 V.	• Poor ground (G301) • An open in the wire
J8	YEL	Ignition switch ON (II)	Measure the voltage to ground: There should be battery voltage.	• Blown No. 21 (10 A) fuse in the driver's under-dash fuse/relay box • An open in the wire

5. Disconnect under-hood fuse/relay box connector J (10P), and do these input tests at the following connector.
   - If any test indicates a problem, find and correct the cause, then recheck the system.
   - If all the input tests prove OK, the relay control module must be faulty, replace the under-hood fuse/relay box (see page 22-84).

Cavity	Wire	Test condition	Test: Desired result	Possible cause if desired result is not obtained
J7	LT GRN	Under all conditions	Check for continuity between terminal J7 and driver's under-dash fuse/relay box connector D (17P) terminal No. 11: There should be continuity.	An open in the wire
		Under all conditions (Driver's under-dash fuse/relay box connector D (17P) disconnected)	Check for continuity to ground: There should be no continuity.	A short to ground in the wire

Driver's MPCS Unit Input Test

1. Turn the ignition switch to LOCK (0).
2. Remove the driver's door panel (see page 20-9).
3. Disconnect driver's MPCS unit connector A (40P).

DRIVER'S MPCS UNIT CONNECTOR A (40P)

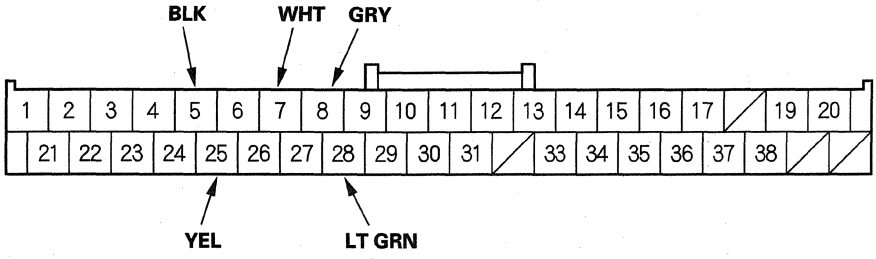

Wire side of female terminals

4. Inspect the connector and socket terminals to be sure they are all making good contact.
   - If the terminals are bent, loose or corroded, repair them as necessary and recheck the system.
   - If the terminals look OK, go to step 5.
5. Reconnect the connector to the driver's MPCS unit, and do these input tests at the following connector.
   - If any test indicates a problem, find and correct the cause, then recheck the system.
   - If all the input tests prove OK, go to step 6.

Cavity	Wire	Test condition	Test: Desired result	Possible cause if desired result is not obtained
A5	BLK	Under all conditions	Measure the voltage to ground: There should be less than 0.2 V.	• Poor ground (G601) • An open in the wire
A7	WHT	Under all conditions	Measure the voltage to ground: There should be battery voltage.	• Blown No. 15 (40 A) fuse in the under-hood fuse/relay box • Blown No. 7 (10 A) fuse in the driver's under-dash fuse/relay box • An open in the wire
A25	YEL	Ignition switch ON (II)	Measure the voltage to ground: There should be battery voltage.	• Blown No. 21 (10 A) fuse in the driver's under-dash fuse/relay box • An open in the wire

(cont'd)

Driver's MPCS Unit Input Test (cont'd)

6. Disconnect driver's MPCS connector A (40P), and do these input tests at the following connector.

   - If any test indicates a problem, find and correct the cause, then recheck the system.
   - If all the input tests prove OK, the driver's MPCS unit must be faulty, replace it.

Cavity	Wire	Test condition	Test: Desired result	Possible cause if desired result is not obtained
A8	GRY	Under all conditions (Driver's under-dash fuse/relay box connector J (21P), power window master switch 6P connector, and moonroof motor/control unit 10P connector disconnected)	Check for continuity between terminal A8 and driver's under-dash fuse/relay box connector J (21P) terminal No. 1, terminal A8 and power window master switch 6P connector terminal No. 6, and terminal A8 and moonroof motor/control unit 10P connector terminal No. 4: There should be continuity.	An open in the wire
			Check for continuity to ground: There should be no continuity.	A short to ground in the wire
A28	LT GRN	Under all conditions (Driver's under-dash fuse/relay box connector J (21P) and AcuraLink control unit (XM receiver) connector A (32P) disconnected)	Check for continuity between terminal A28 and driver's under-dash fuse/relay box connector J (21P) terminal No. 4, and terminal A8 and AcuraLink control unit (XM receiver) connector A (32P) terminal No. 10: There should be continuity.	An open in the wire
			Check for continuity to ground: There should be no continuity.	A short to ground in the wire

Component Location Index

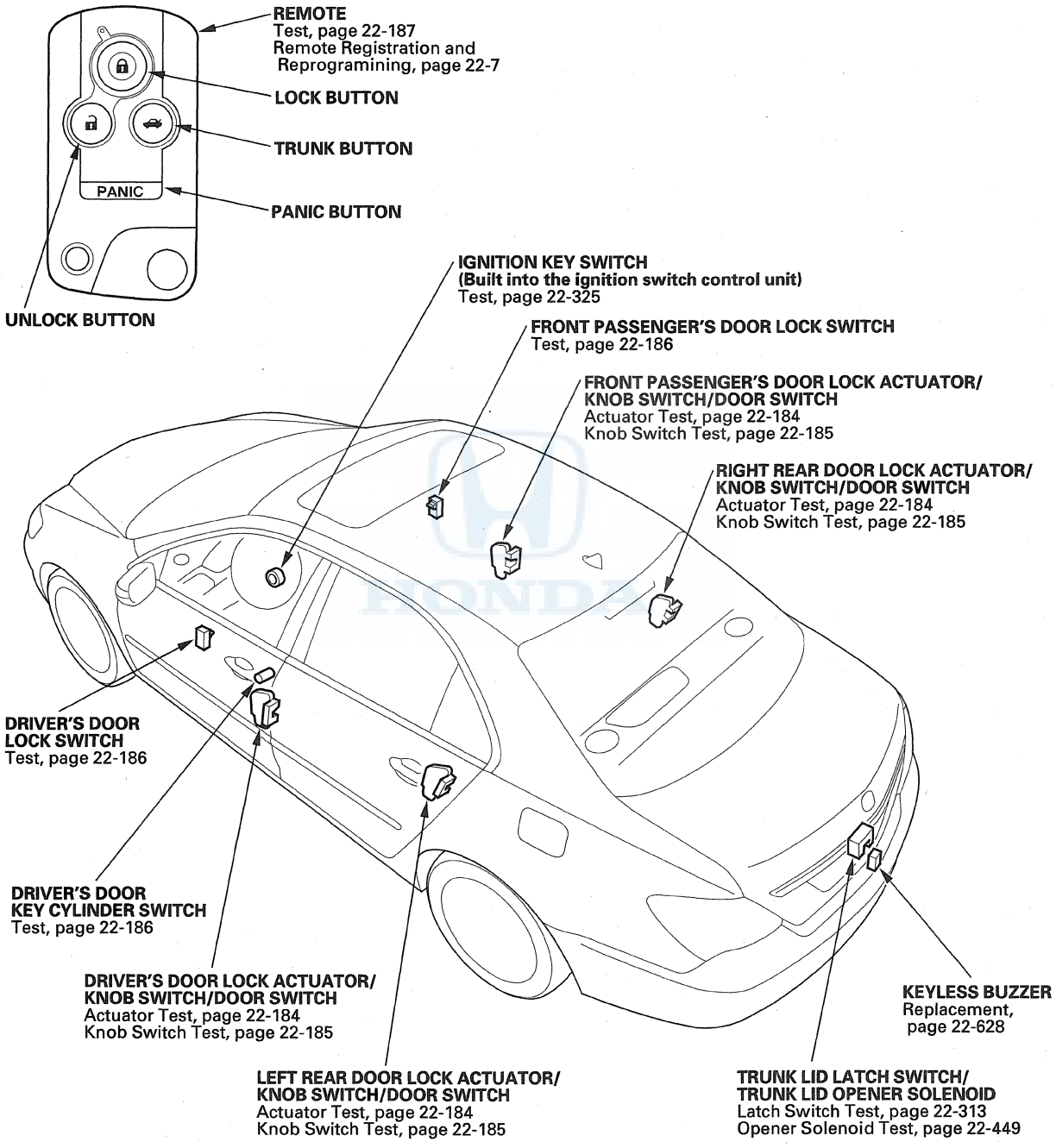

(cont'd)

Component Location Index (cont'd)

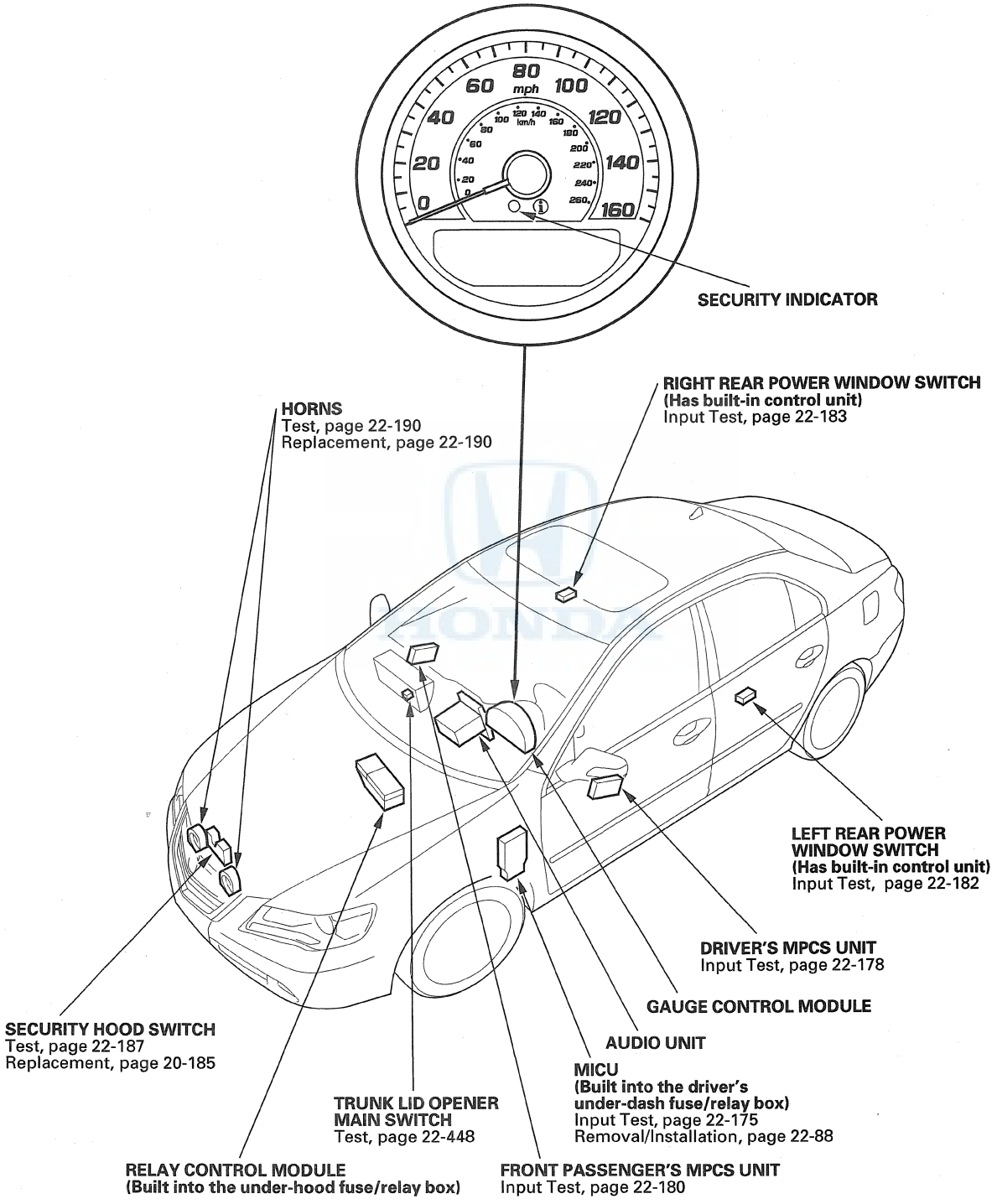

System Description

Security Alarm System

The security alarm system is integrated with the multiplex integrated control system, and arms automatically after the doors, hood, and trunk lid are closed and locked. For the system to arm, the ignition switch must be in the LOCK (0) position, the key must be removed from the ignition switch, and the MICU must receive inputs that the doors, hood, and trunk lid are closed and locked. The alarm can be disarmed at any time by unlocking the driver's door with the key, pressing the UNLOCK button on the remote, or grabbing the outer door handle with the keyless remote in range.

When everything is closed and locked, the only inputs that are grounded, and have 0 V, are the driver's door lock knob switch (LOCK position), and the audio unit. In other words, all of the other switches are open, and have about 10—12 V, including the key cylinder switches. The security indicator in the gauge control module begins to flash immediately after the doors, hood, and trunk lid are closed and locked, and shorty later, the security system arms and the security indicator flashes on for a shorter amount of time than before. If the security indicator does not flash, the system is not arming. If the vehicle is completely closed and locked, a beep sounds and parking lights flash to confirm the security alarm system is armed if the LOCK button is pressed a second time within 5 seconds, and the keyless lock acknowledgment is turned on.

If one of the switches is misadjusted or shorted internally, or there is a short in to ground in its circuit (0 V), the security system will not arm. As long as the control unit continues to receive a ground input (0 V) except for the driver's door lock/unlock knob switch input, it senses that the vehicle is not closed and locked, and the system will not arm. A switch that is slightly misadjusted can cause the alarm to sound for no apparent reason. In this case, a significant change in outside air temperature, the vibration of a passing vehicle, or something bumping into the vehicle could cause the alarm to sound.

NOTE: There is no glass breakage or motion detection feature.

If anything is opened or improperly unlocked after the system is armed, the control unit receives a ground signal from that switch, and the 10 to 12 V reference drops to 0 V. If the audio unit is disconnected, the input loses its ground, and the input voltage goes from 0 V to 10 to 12 V.
The system sounds the alarm when any of these occur:

- A door or the trunk lid is forced open
- A door is unlocked without using the built-in key or the remote
- The hood is opened
- The audio unit is disconnected
- The remote panic is operated

When the system sounds the alarm, the horns sound and the exterior lights flash for 2 minutes. The alarm can be stopped at any time by unlocking the driver's door by pressing any button on the remote.

NOTE: The security system can be customized to suit client needs using the multi-information display (MID). For more information about keyless/security system options, refer to the Owner's Manual.

Panic Mode

The panic mode sounds the alarm in order to attract attention. When the PANIC button on the remote is pressed and held for about 2 seconds, the alarm sounds and the exterior lights flash for about 20 seconds.

The panic mode can be cancelled at anytime by pressing any button on the remote or by turning the ignition switch to ON (II). The panic mode will not function if the ignition switch is in ON (II).

(cont'd)

System Description (cont'd)

Keyless Entry System

The keyless entry system is integrated with the multiplex integrated control system. Remotes 1 and 2 (Identified on the back of each remote) are linked to the DPMS, keyless access control unit, the climate control settings, the custom memory settings (in the MID), and the illumination settings. Depending on which remote unlocks the vehicle, these settings are chosen.

Some functions of the security, keyless entry, and power door locks can be customized using the MID keyless memory setting. They include:

- AUTO DOOR LOCK: Door locking can be turned off, or turned on when shifting from Park or at a speed above 10 mph.
- AUTO DOOR UNLOCK: Door unlocking can be turned off, or turned on when shifting to Park or turning the ignition switch OFF.
- WHENEVER UNLOCKING: Door unlocking can be set to unlock all doors or only the driver's door on the first push.
- KEYLESS DOOR LOCK ACKNOWLEDGEMENT: The beep and the front parking lights can be turned on or off when pressing the LOCK/UNLOCK button on the remote.
- SECURITY RELOCK TIMER: Select the time (30, 60, or 90 sec.) that the doors relock if you unlock the doors with the remote, but do not open any of them.
- HEADLIGHT AUTO OFF TIMER: Select time (0, 15, 30, or 60 sec.) to turn the headlights off after removing the key from the ignition opening, then closing the driver's door.
- AUTO LIGHT SENSITIVITY: Automatic lighting sensor sensitivity can be adjusted in five steps (MIN/LOW/MID/HIGH/MAX).
- INTERIOR LIGHT DIMMING TIMER: Select the dimming time (15, 30, or 60 sec.) of the interior lights after closing the door with the key removed from the ignition.

The remotes can be linked and unlinked to the keyless memory settings by pressing the LOCK and UNLOCK buttons at the same time for about 1 second. The LED on the remote blinks twice when linked, and once when unlinked.

The keyless entry system allows you to lock and unlock the vehicle with the remote. When you press the LOCK button, all the doors lock (unless any one of the doors is not fully closed or the key is in the ignition switch).
When you press the UNLOCK button once, only the driver's door unlocks, if keyless memory setting "WHENEVER UNLOCKING" is set to Driver's Door. The other doors unlock when you press the UNLOCK button a second time. All the doors unlock when you press the UNLOCK button the first time if keyless memory setting "WHENEVER UNLOCKING" is set to All Doors. The doors will not lock with the remote if a door is not fully closed, or if the remote's built-in key is in the ignition switch.

If the UNLOCK button is pressed, released, then pressed and held, the power windows and the moonroof begin to open. The windows and the moonroof stop if the button is released. The windows and moonroof cannot be closed with the remote. See power windows for more information and troubleshooting.

When the interior lights switch is in the "DOOR" position, the individual map lights will come on when the UNLOCK button is pressed. If a door is not opened, the lights will go off in about 30, 60, or 90 seconds (depending on the keyless memory setting "SECURITY RELOCK TIMER"), and the doors will relock. If the doors are locked with the remote within 30 seconds, the lights will go off immediately.

Power Door Lock System

The power door lock system locks and unlocks all four doors with the driver's or passenger's master door lock switch. The doors can be locked and unlocked using the remote's built-in key in the driver's door key cylinder switch. If the key is turned counterclockwise, all the doors lock. If the key is turned clockwise once, the driver's door unlocks, and when the key is released, then turned again, the other doors unlock.
The doors can also be locked by pushing down on the lock knob on the driver's door. Pulling up on the lock knob only unlocks the driver's door. The lock knobs on the other doors only lock and unlock that door.
If the remote's built-in key is in the ignition, and a door is open, the doors will not lock using the master door lock switches and the driver's MPCS will automatically unlock the doors if you push down on the driver's door lock knob.

HONDA

Circuit Diagram

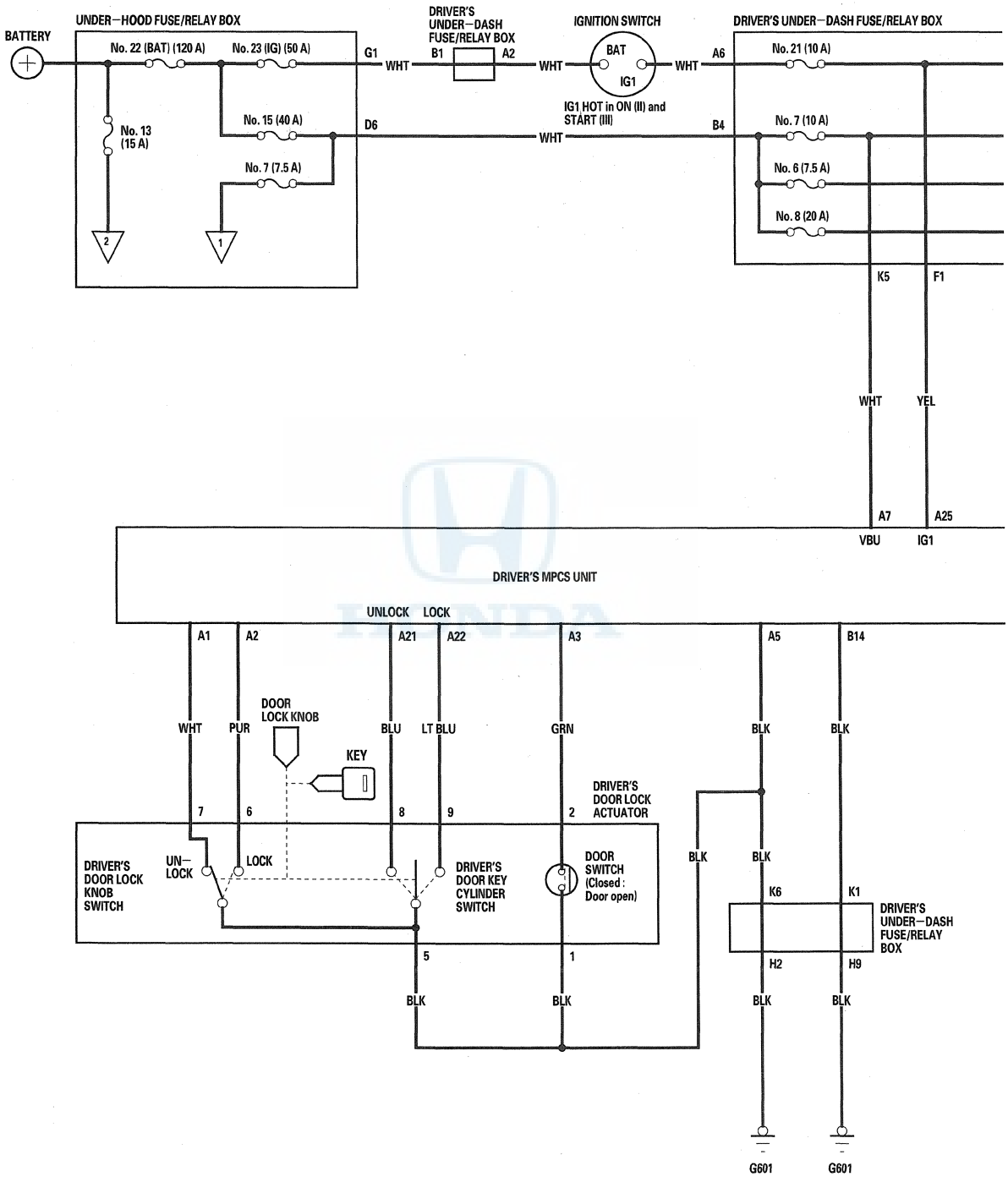

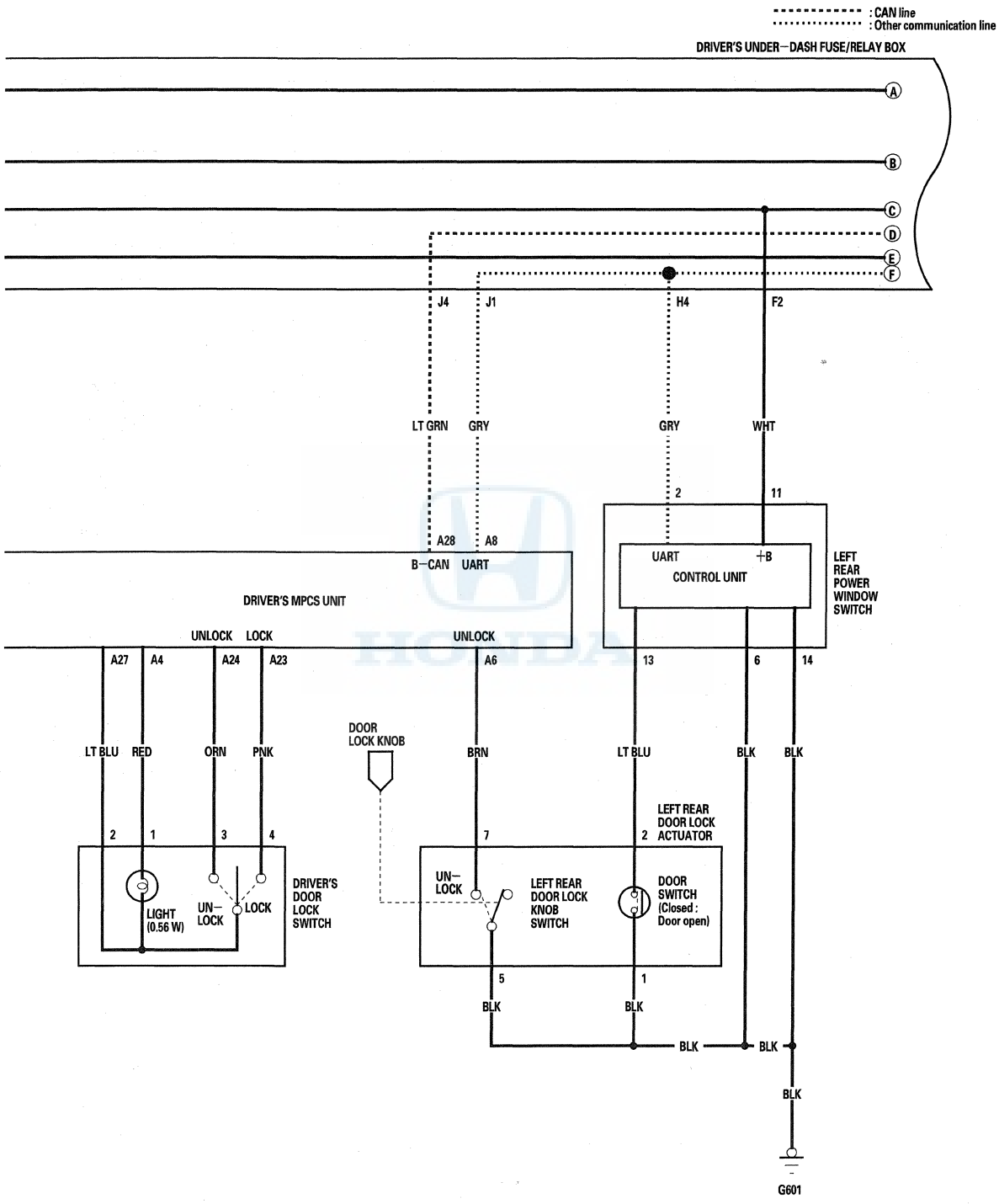
: CAN line
: Other communication line
DRIVER'S UNDER-DASH FUSE/RELAY BOX
A
B
C
D
E
F
J4
J1
H4
F2
LT GRN
GRY
GRY
WHT
2
11
A28
A8
B-CAN
UART
UART
+B
CONTROL UNIT
LEFT REAR POWER WINDOW SWITCH
DRIVER'S MPCS UNIT
UNLOCK
LOCK
UNLOCK
A27
A4
A24
A23
A6
13
6
14
LT BLU
RED
ORN
PNK
BRN
LT BLU
BLK
BLK
DOOR LOCK KNOB
2
1
3
4
7
2
LEFT REAR DOOR LOCK ACTUATOR
LIGHT (0.56 W)
UN-LOCK
LOCK
DRIVER'S DOOR LOCK SWITCH
UN-LOCK
LEFT REAR DOOR LOCK KNOB SWITCH
DOOR SWITCH (Closed : Door open)
5
1
BLK
BLK
BLK
BLK
BLK
G601

(cont'd)

Circuit Diagram (cont'd)

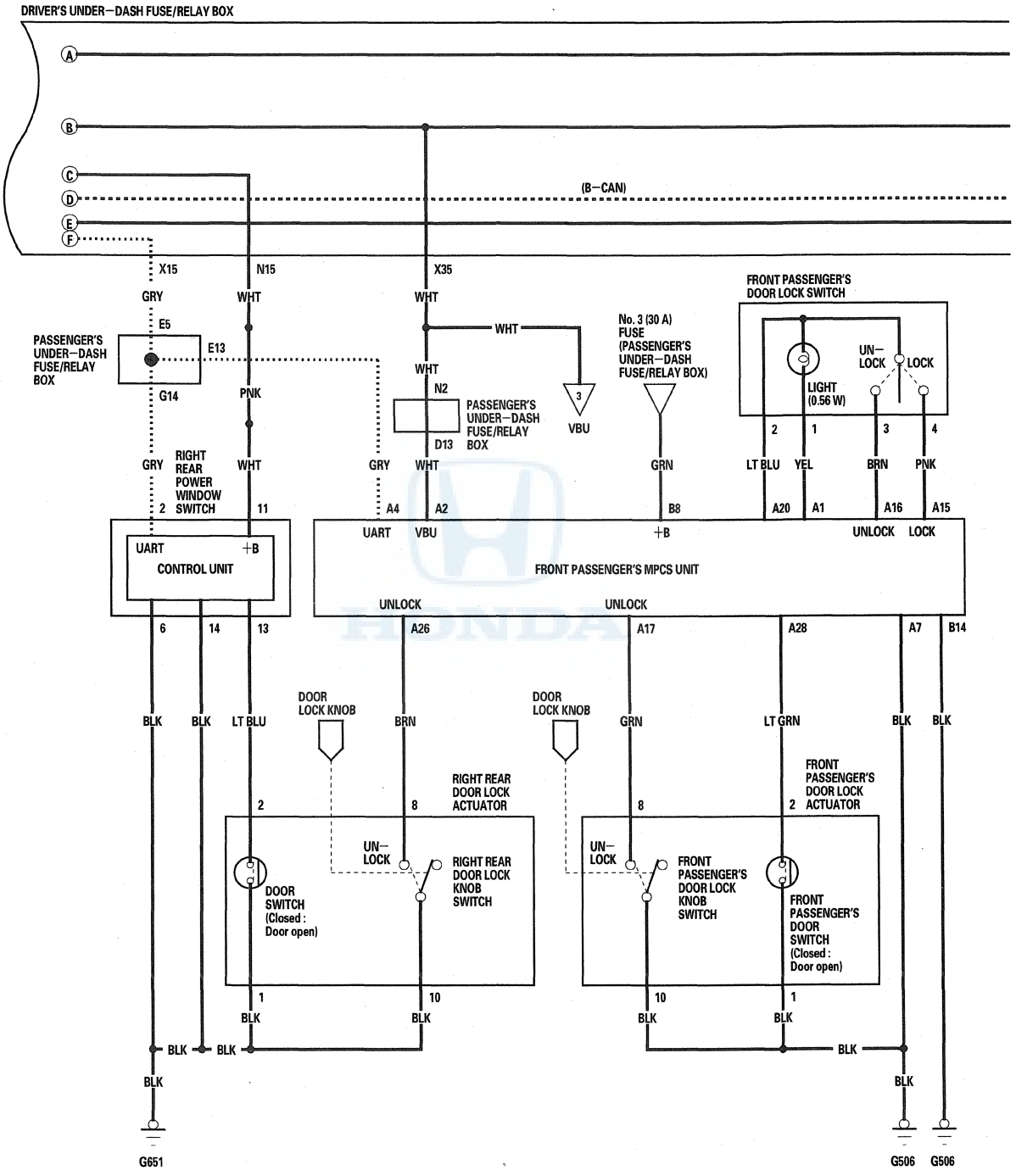

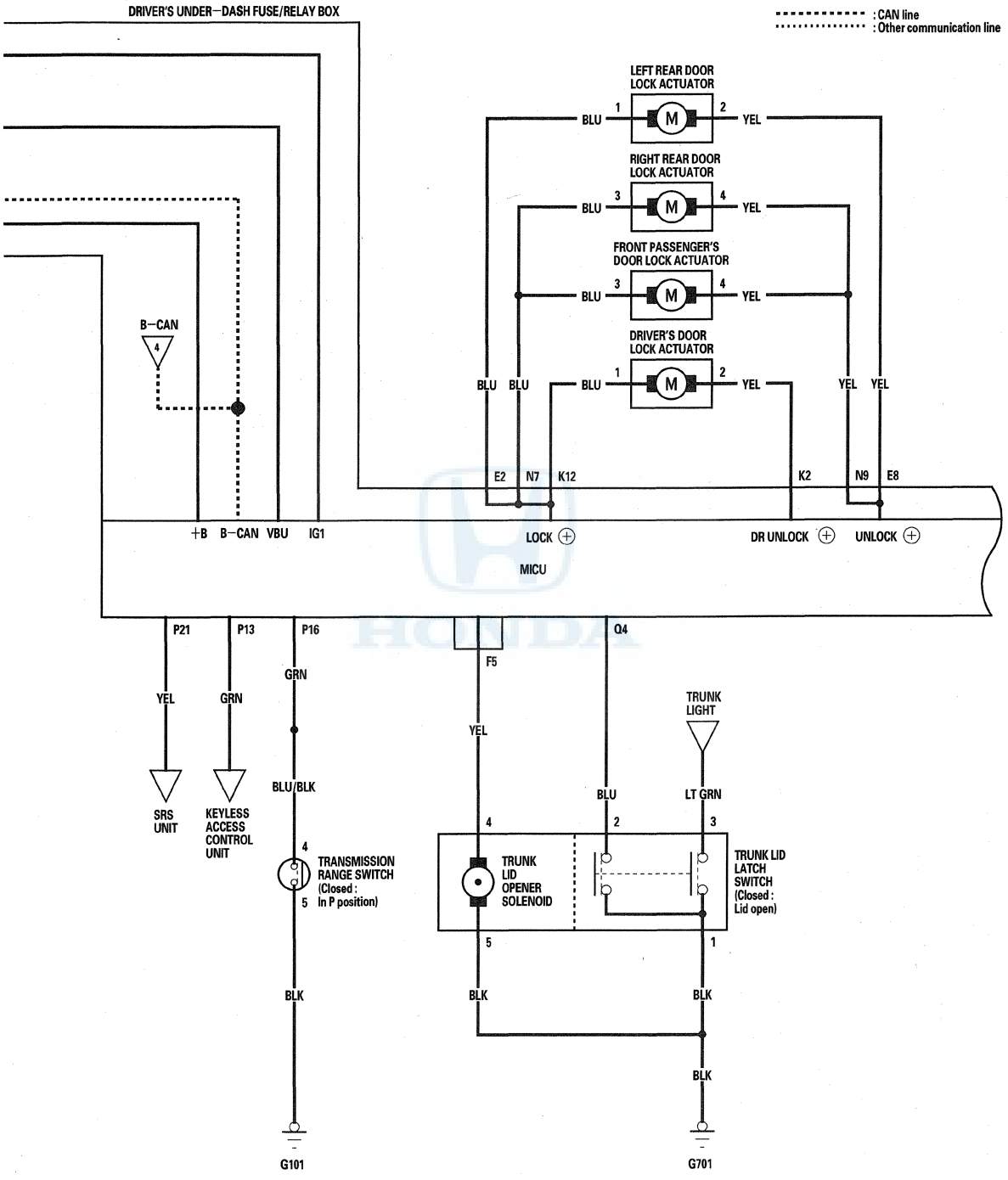
DRIVER'S UNDER-DASH FUSE/RELAY BOX
: CAN line
: Other communication line
LEFT REAR DOOR LOCK ACTUATOR
RIGHT REAR DOOR LOCK ACTUATOR
FRONT PASSENGER'S DOOR LOCK ACTUATOR
DRIVER'S DOOR LOCK ACTUATOR
BLU
YEL
M
B-CAN
4
E2
N7
K12
K2
N9
E8
+B
B-CAN
VBU
IG1
LOCK
DR UNLOCK
UNLOCK
MICU
P21
P13
P16
Q4
F5
GRN
YEL
GRN
BLU/BLK
SRS UNIT
KEYLESS ACCESS CONTROL UNIT
TRANSMISSION RANGE SWITCH (Closed : In P position)
TRUNK LIGHT
LT GRN
TRUNK LID OPENER SOLENOID
TRUNK LID LATCH SWITCH (Closed : Lid open)
BLK
G101
G701

(cont'd)

Circuit Diagram (cont'd)

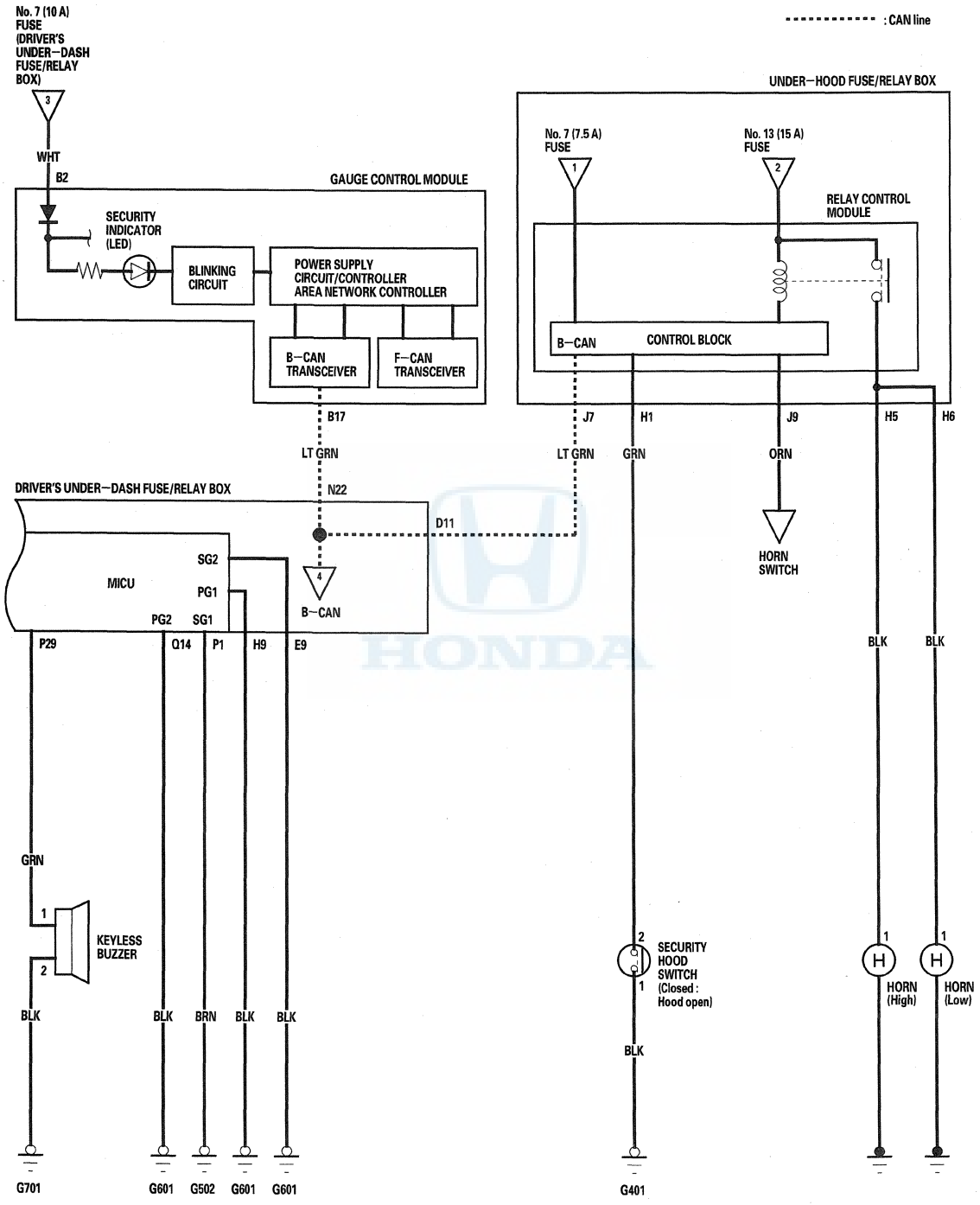

DTC Troubleshooting

DTC B2179: Driver's Door Key Cylinder Switch Input Circuit Malfunction

NOTE: If you are troubleshooting multiple DTCs, be sure to follow the instructions in B-CAN System Diagnosis Test Mode A (see page 22-131).

1. Clear the DTCs with the HDS.
2. Turn the ignition switch to LOCK (0) and then back to ON (II).
3. Turn the driver's door key cylinder to the LOCK and UNLOCK positions with the ignition key.
4. Check for DTCs with the HDS.

   Is DTC B2179 indicated?

   YES—Go to step 5.
   NO—Intermittent failure, the system is OK at this time. Check for loose or poor connections. ■
5. With the driver's door key cylinder switch in neutral position, select DOOR LOCK from the BODY ELECTRICAL menu, and enter DATA LIST.
6. Check the ON/OFF information of the DRIVER'S DOOR KEY CYLINDER SWITCH (LOCK) and DRIVER'S DOOR KEY CYLINDER SWITCH (UNLOCK) in the DATA LIST.

   Are both information indicators OFF?

   YES—Go to step 7.
   NO—Go to step 8.
7. Turn the driver's door key cylinder to the LOCK and UNLOCK positions with the ignition key, and check the ON/OFF information of the DRIVER'S DOOR KEY CYLINDER SWITCH (LOCK) and DRIVER'S DOOR KEY CYLINDER SWITCH (UNLOCK) in the DATA LIST.

   Are both information indicators ON at the same time with the door key cylinder switch in the LOCK or UNLOCK position?

   YES—Test the key cylinder switch (see page 22-186). If it is OK, repair short between the wires. ■
   NO—Replace the driver's MPCS unit. ■
8. Disconnect the driver's door lock actuator 10P connector.
9. Check the ON/OFF information of the DRIVER'S DOOR KEY CYLINDER SWITCH (LOCK) and DRIVER'S DOOR KEY CYLINDER SWITCH (UNLOCK) in the DATA LIST.

   Are both information indicators OFF?

   YES—Faulty driver's door key cylinder switch; replace the driver's door lock actuator assembly. ■

   NO—Go to step 10.
10. Turn the ignition switch to LOCK (0).
11. Disconnect driver's MPCS unit connector A (40P).
12. Check for continuity between body ground and driver's door lock actuator 10P connector terminals No. 8 and No. 9 individually.

DRIVER'S DOOR LOCK ACTUATOR 10P CONNECTOR

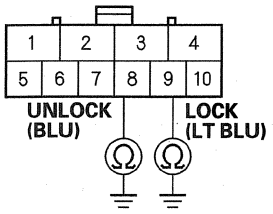

Wire side of female terminals

Is there continuity?

YES—Repair a short to ground in the wire. ■

NO—Replace the driver's MPCS unit. ■

DTC Troubleshooting (cont'd)

DTC B2180: Driver's Door Lock Switch Input Circuit Malfunction

NOTE: If you are troubleshooting multiple DTCs, be sure to follow the instructions in B-CAN System Diagnosis Test Mode A (see page 22-131).

1. Clear the DTCs with the HDS.
2. Turn the ignition switch to LOCK (0) and then back to ON (II).
3. Lock and unlock the driver's door with the driver's door lock switch.
4. Check for DTCs with the HDS.

   Is DTC B2180 indicated?

   YES—Go to step 5.

   NO—Intermittent failure, the system is OK at this time. Check for loose or poor connections. ■
5. With the driver's door lock switch in the neutral position, select DOOR LOCK from the BODY ELECTRICAL menu, and enter DATA LIST.
6. Check the ON/OFF Information of the DRIVER'S DOOR LOCK SWITCH (LOCK) and DRIVER'S DOOR LOCK SWITCH (UNLOCK).

   Are both information indicators OFF?

   YES—Go to step 7.

   NO—Go to step 8.
7. Operate the driver's door lock switch in the LOCK and UNLOCK positions, and check the ON/OFF information of the DRIVER'S DOOR LOCK SWITCH (LOCK) and DRIVER'S DOOR LOCK SWITCH (UNLOCK).

   Are both information indicators ON at the same time when the door lock switch is in the LOCK or UNLOCK position?

   YES—Repair a short between the wires. ■

   NO—Replace the driver's MPCS unit. ■
8. Disconnect the driver's door lock switch 4P connector.
9. Check the ON/OFF information of the DRIVER'S SIDE REMOTE DOOR LOCK SWITCH (LOCK) and DRIVER'S SIDE REMOTE DOOR LOCK SWITCH (UNLOCK).

   Are both information indicators OFF?

   YES—Faulty driver's door lock switch; replace it. ■

   NO—Go to step 10.
10. Turn the ignition switch to LOCK (0).
11. Disconnect driver's MPCS unit connector A (40P).
12. Check for continuity between body ground and driver's door lock switch 4P connector terminals No. 3 and No. 4 individually.

DRIVER'S DOOR LOCK SWITCH 4P CONNECTOR

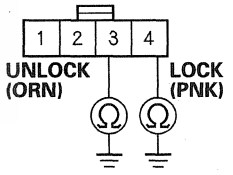

Wire side of female terminals

Is there continuity?

YES—Repair a short to ground in the wire. ■

NO—Replace the driver's MPCS unit. ■

DTC B2181: Driver's Door Lock Knob Switch Input Circuit Malfunction

NOTE: If you are troubleshooting multiple DTCs, be sure to follow the instructions in B-CAN System Diagnosis Test Mode A (see page 22-131).

1. Clear the DTCs with the HDS.
2. Turn the ignition switch to LOCK (0) and then back to ON (II).
3. Lock and unlock the driver's door with the driver's door lock knob switch.
4. Check for DTCs with the HDS.

   Is DTC B2181 indicated?

   YES—Go to step 5.

   NO—Intermittent failure, the system is OK at this time. Check for loose or poor connections. ■
5. Select DOOR LOCK from the BODY ELECTRICAL menu, and enter DATA LIST.
6. Check the ON/OFF information of the DRIVER'S DOOR LOCK KNOB SWITCH (LOCK) and DRIVER'S DOOR LOCK KNOB SWITCH (UNLOCK) in the DATA LIST.

   Does the DRIVER'S DOOR LOCK KNOB SWITCH (LOCK) information indicate ON and DRIVER'S DOOR LOCK KNOB SWITCH (UNLOCK) information indicate OFF with the door lock knob switch is in the LOCK position, and does the DRIVER'S DOOR LOCK KNOB SWITCH (LOCK) information indicate OFF and DRIVER'S DOOR LOCK KNOB SWITCH (UNLOCK) information indicate ON with the door lock knob switch is in the UNLOCK position?

   YES—Replace the driver's MPCS unit. ■

   NO—Go to step 7.
7. Disconnect the driver's door lock actuator 10P connector.
8. Check the ON/OFF information of the DRIVER'S DOOR LOCK KNOB SWITCH (LOCK) and DRIVER'S DOOR LOCK KNOB SWITCH (UNLOCK) in the DATA LIST.

   Are both information indicators OFF?

   YES—Faulty driver's door lock knob switch; replace the driver's door lock actuator assembly. ■

   NO—Go to step 9.
9. Turn the ignition switch to LOCK (0).
10. Disconnect driver's MPCS unit connector A (40P).
11. Check for continuity between body ground and driver's door lock actuator 10P connector terminals No. 6 and No. 7 individually.

DRIVER'S DOOR LOCK ACTUATOR 10P CONNECTOR

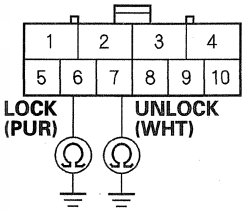

Wire side of female terminals

Is there continuity?

YES—Repair a short to ground in the wire. ■

NO—Replace the driver's MPCS unit. ■

DTC Troubleshooting (cont'd)

DTC B2186: Front Passenger's Door Lock Switch Input Circuit Malfunction

NOTE: If you are troubleshooting multiple DTCs, be sure to follow the instructions in B-CAN System Diagnosis Test Mode A (see page 22-131).

1. Clear the DTCs with the HDS.
2. Turn the ignition switch to LOCK (0) and then back to ON (II).
3. Lock and unlock the front passenger's door with the front passenger's door lock switch operation.
4. Check for DTCs with the HDS.

   Is DTC B2186 indicated?

   YES—Go to step 5.

   NO—Intermittent failure, the system is OK at this time. Check for loose or poor connections. ■
5. With the front passenger's door lock switch in the neutral position, select DOOR LOCK from the BODY ELECTRICAL menu, and enter DATA LIST.
6. Check the ON/OFF information of the FRONT PASSENGER'S DOOR LOCK SWITCH (LOCK) and FRONT PASSENGER'S DOOR LOCK SWITCH (UNLOCK).

   Are both information indicators OFF?

   YES—Go to step 7.

   NO—Go to step 8.
7. Operate the front passenger's door lock switch in the LOCK and UNLOCK positions, and check the ON/OFF information of the FRONT PASSENGER'S DOOR LOCK SWITCH (LOCK) and FRONT PASSENGER'S DOOR LOCK SWITCH (UNLOCK).

   Are both information indicators ON at the same time when the door lock switch is in the LOCK or UNLOCK position?

   YES—Repair a short between the wires. ■

   NO—Replace the front passenger's MPCS unit. ■
8. Disconnect the front passenger's door lock switch 4P connector.
9. Check the ON/OFF information of the ASSISTANT SIDE REMOTE DOOR LOCK SWITCH (LOCK) and ASSISTANT SIDE REMOTE DOOR LOCK SWITCH (UNLOCK).

   Are both information indicators OFF?

   YES—Faulty front passenger's door lock switch; replace it. ■

   NO—Go to step 10.
10. Turn the ignition switch to LOCK (0).
11. Disconnect front passenger's MPCS unit connector A (28P).
12. Check for continuity between body ground and front passenger's door lock switch 4P connector terminals No. 3 and No. 4 individually.

FRONT PASSENGER'S DOOR LOCK SWITCH 4P CONNECTOR

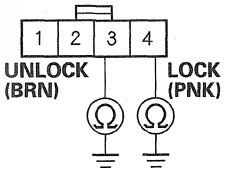

Wire side of female terminals

Is there continuity?

YES—Repair a short to ground in the wire. ■

NO—Replace the front passenger's MPCS unit. ■

Control Unit Input Test

MICU

1. Turn the ignition switch to LOCK (0).
2. Remove the left kick panel (see page 20-67).
3. Disconnect driver's under-dash fuse/relay box connectors E, F, K, N, P, and Q.

   NOTE: All connector views are wire side of female terminals.

CONNECTOR E (16P)

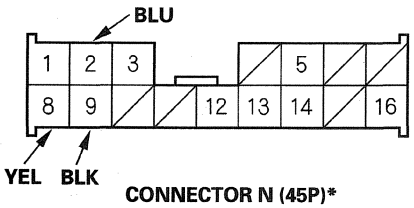

CONNECTOR F (14P)

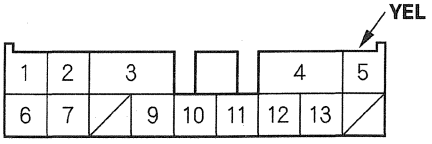

CONNECTOR N (45P)*

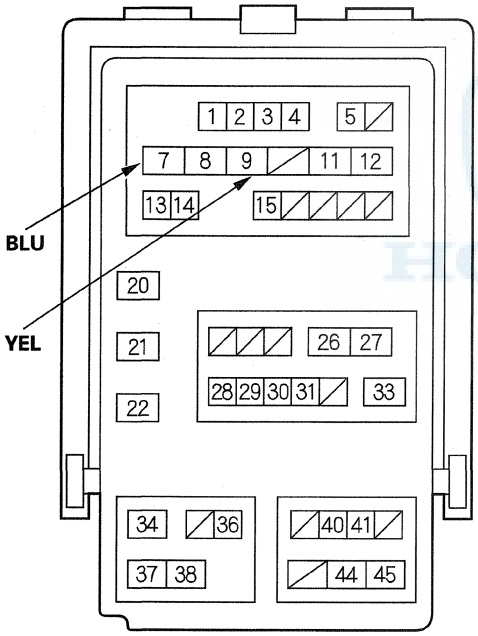

CONNECTOR K (12P)

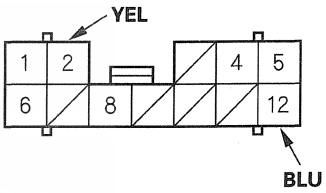

CONNECTOR Q (14P)

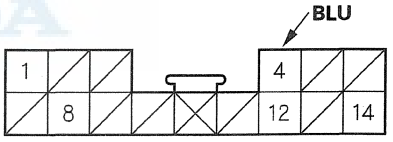

CONNECTOR P (30P)

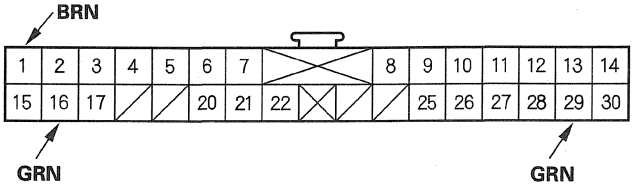

*Connector view shown rotated 180 ° from actual position in the under-dash fuse/relay box.

4. Inspect the connector and socket terminals to be sure they are all making good contact.

   - If the terminals are bent, loose or corroded, repair them as necessary and recheck the system.
   - If the terminals look OK, go to step 5.

(cont'd)

Control Unit Input Test (cont'd)

5. With the connectors still disconnected, do these input tests at the following connectors.

   - If any test indicates a problem, find and correct the cause, then recheck the system.
   - If all the input tests prove OK, go to step 6.

Cavity	Wire	Test condition	Test: Desired result	Possible cause if desired result is not obtained
F5	YEL	Connect battery power to terminal F5 momentarily.	Check the trunk lid opener solenoid operation: The trunk lid should open.	• Faulty trunk lid opener solenoid • An open in the wire
P29	GRN	Connect battery power to terminal P29 momentarily.	Check the keyless buzzer operation: The buzzer should sound.	• Faulty keyless buzzer • An open in the wire
K2 K12	YEL BLU	Connect battery power to terminal K2 (K12), and terminal K12 (K2) to terminal P1.	Check the door lock actuator operation: The driver's door lock actuator should UNLOCK (LOCK).	• Faulty driver's door lock actuator • An open in the wire
E2 E8	BLU YEL	Connect battery power to terminal E2 (E8), and terminal E8 (E2) to terminal P1.	Check the door lock actuator operation: The left rear door lock actuator should LOCK (UNLOCK).	• Faulty left rear door lock actuator • An open in the wire
N7 N9	BLU YEL	Connect battery power to terminal N7 (N9), and terminal N9 (N7) to terminal P1.	Check the door lock actuator operation: The front passenger's and right rear door lock actuators should LOCK (UNLOCK).	• Faulty front passenger's door lock actuator • Faulty right rear door lock actuator • An open in the wire

6. Reconnect the connectors to the driver's under-dash fuse/relay box, turn the ignition switch to ON (II), and do these input tests at the following connectors.

   - If any test indicates a problem, find and correct the cause, then recheck the system.
   - If all the input tests prove OK, go to step 7.

Cavity	Wire	Test condition	Test: Desired result	Possible cause if desired result is not obtained
P1	BRN	Under all conditions	Measure the voltage to ground: There should be less than 0.2 V.	• Poor ground (G502) • An open in the wire
E9	BLK	Under all conditions	Measure the voltage to ground: There should be less than 0.2 V.	• Poor ground (G601) • An open in the wire
P16	GRN	Transmission range switch in P position.	Measure the voltage to ground: There should be less than 0.2 V.	• Poor ground (G101) • Faulty transmission range switch • An open in the wire
		Transmission range switch in any other position than P.	Measure the voltage to ground: There should be at least 5 V.	• Faulty transmission range switch • A short to ground in the wire
Q4	BLU	Trunk lid open NOTE: Trunk light bulb removed.	Measure the voltage to ground: There should be less than 0.2 V.	• Poor ground (G701) • Faulty trunk lid latch switch • An open in the wire
		Trunk lid closed NOTE: Trunk light bulb removed.	Measure the voltage to ground: There should be at least 5 V.	• Faulty trunk lid latch switch • A short to ground in the wire

(cont'd)

Control Unit Input Test (cont'd)

Driver's MPCS Unit

7. Remove the driver's door panel (see page 20-9).

8. Disconnect driver's MPCS unit connectors A (40P) and B (14P).

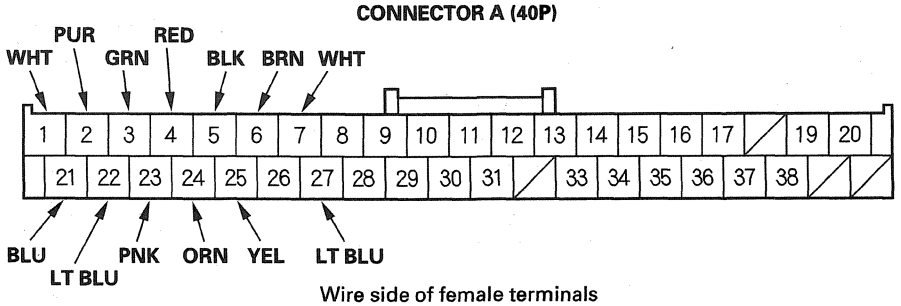

Wire side of female terminals

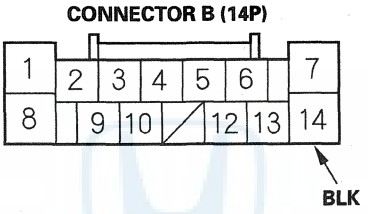

Wire side of female terminals

9. Inspect the connector and socket terminals to be sure they are all making good contact.

   - If the terminals are bent, loose or corroded, repair them as necessary and recheck the system.
   - If the terminals look OK, go to step 10.

10. With the connectors still disconnected, do these input tests at the following connectors.

    - If any test indicates a problem, find and correct the cause, then recheck the system.
    - If all the input tests prove OK, go to step 11.

Cavity	Wire	Test condition	Test: Desired result	Possible cause if desired result is not obtained
A23 A27	PNK LT BLU	Driver's door lock switch in LOCK	Check for continuity between the terminals: There should be continuity.	• Faulty driver's door lock switch • An open in the wire
A23 A27	PNK LT BLU	Driver's door lock switch in neutral or UNLOCK	Check for continuity between the terminals: There should be no continuity.	• Faulty driver's door lock switch • A short to ground in the wire

Cavity	Wire	Test condition	Test: Desired result	Possible cause if desired result is not obtained
A24 A27	ORN LT BLU	Driver's door lock switch in UNLOCK	Check for continuity between the terminals: There should be continuity.	• Faulty driver's door lock switch • An open in the wire
A24 A27	ORN LT BLU	Driver's door lock switch in neutral or LOCK	Check for continuity between the terminals: There should be no continuity.	• Faulty driver's door lock switch • A short to ground in the wire
A4 A27	RED LT BLU	Under all conditions	Check for continuity between the terminals: There should be continuity.	• Faulty driver's door lock switch • Blown bulb • An open in the wire

11. Reconnect the connectors to the driver's MPCS unit, turn the ignition switch to ON (II), and do these input tests at the following connectors.

- If any test indicates a problem, find and correct the cause, then recheck the system.
- If all the input tests prove OK, go to step 12.

Cavity	Wire	Test condition	Test: Desired result	Possible cause if desired result is not obtained
A5	BLK	Under all conditions	Measure the voltage to ground: There should be less than 0.2 V.	• Poor ground (G601) • An open in the wire
B14	BLK	Under all conditions	Measure the voltage to ground: There should be less than 0.2 V.	• Poor ground (G601) • An open in the wire
A7	WHT	Under all conditions	Measure the voltage to ground: There should be battery voltage.	• Blown No. 15 (40 A) fuse in the under-hood fuse/relay box • Blown No. 7 (10 A) fuse in the driver's under-dash fuse/relay box • An open in the wire
A25	YEL	Ignition switch ON (II)	Measure the voltage to ground: There should be battery voltage.	• Blown No. 21 (10 A) fuse in the driver's under-dash fuse/relay box • An open in the wire
A1	WHT	Driver's door lock knob switch in UNLOCK	Measure the voltage to ground: There should be less than 0.2 V.	• Poor ground (G601) • Faulty driver's door lock knob switch • An open in the wire
		Driver's door lock knob switch in LOCK	Measure the voltage to ground: There should be at least 5 V.	• Faulty driver's door lock knob switch • A short to ground in the wire
A2	PUR	Driver's door lock knob switch in LOCK	Measure the voltage to ground: There should be less than 0.2 V.	• Poor ground (G601) • Faulty driver's door lock knob switch • An open in the wire
		Driver's door lock knob switch in UNLOCK	Measure the voltage to ground: There should be at least 5 V.	• Faulty driver's door lock knob switch • A short to ground in the wire
A3	GRN	Driver's door open	Measure the voltage to ground: There should be less than 0.2 V.	• Poor ground (G601) • Faulty driver's door switch • An open in the wire
		Driver's door closed	Measure the voltage to ground: There should be at least 5 V.	• Faulty driver's door switch • A short to ground in the wire
A6	BRN	Left rear door lock knob switch in UNLOCK	Measure the voltage to ground: There should be less than 0.2 V.	• Poor ground (G601) • Faulty left rear door switch • An open in the wire
		Left rear door lock knob switch in LOCK	Measure the voltage to ground: There should be at least 5 V.	• Faulty left rear door switch • A short to ground in the wire
A21	BLU	Driver's door key cylinder switch in UNLOCK	Measure the voltage to ground: There should be less than 0.2 V.	• Poor ground (G601) • Faulty driver's door key cylinder switch • An open in the wire
		Driver's door key cylinder switch in neutral	Measure the voltage to ground: There should be at least 5 V.	• Faulty driver's door key cylinder switch • A short to ground in the wire
		Driver's door key cylinder switch in LOCK	Measure the voltage to ground: There should be at least 5 V.	• Faulty driver's door key cylinder switch • A short to ground in the wire
A22	LT BLU	Driver's door key cylinder switch in LOCK	Measure the voltage to ground: There should be less than 0.2 V.	• Poor ground (G601) • Faulty driver's door key cylinder switch • An open in the wire
		Driver's door key cylinder switch in neutral	Measure the voltage to ground: There should be at least 5 V.	• Faulty driver's door key cylinder switch • A short to ground in the wire
		Driver's door key cylinder switch in UNLOCK	Measure the voltage to ground: There should be at least 5 V.	• Faulty driver's door key cylinder switch • A short to ground in the wire

(cont'd)

Control Unit Input Test (cont'd)

Front Passenger's MPCS Unit

12. Turn the ignition switch to LOCK (0), and remove the front passenger's door panel (see page 20-9).

13. Disconnect passenger's MPCS unit connectors A (28P) and B (14P).

CONNECTOR A (28P)

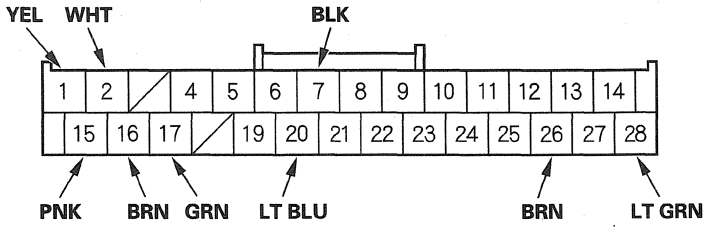

Wire side of female terminals

CONNECTOR B (14P)

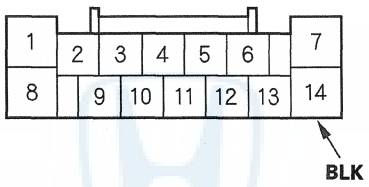

Wire side of female terminals

14. Inspect the connector and socket terminals to be sure they are all making good contact.

    - If the terminals are bent, loose or corroded, repair them as necessary and recheck the system.
    - If the terminals look OK, go to step 15.

15. With the connectors still disconnected, do these input tests at the following connectors.

    - If any test indicates a problem, find and correct the cause, then recheck the system.
    - If all the input tests prove OK, go to step 16.

Cavity	Wire	Test condition	Test: Desired result	Possible cause if desired result is not obtained
A15 A20	PNK LT BLU	Front passenger's door lock switch in LOCK	Check for continuity between the terminals: There should be continuity.	• Faulty front passenger's door lock switch • An open in the wire
A15 A20	PNK LT BLU	Front passenger's door lock switch in neutral or UNLOCK	Check for continuity between the terminals: There should be no continuity.	• Faulty front passenger's door lock switch • A short to ground in the wire

Cavity	Wire	Test condition	Test: Desired result	Possible cause if desired result is not obtained
A16 A20	BRN LT BLU	Front passenger's door lock switch in UNLOCK	Check for continuity between the terminals: There should be continuity.	• Faulty front passenger's door lock switch • An open in the wire
A16 A20	BRN LT BLU	Front passenger's door lock switch in neutral or LOCK	Check for continuity between the terminals: There should be no continuity.	• Faulty front passenger's door lock switch • A short to ground in the wire
A1 A20	YEL LT BLU	Under all conditions	Check for continuity between the terminals: There should be continuity.	• Faulty front passenger's door lock switch • Blown bulb • An open in the wire

16. Reconnect the connectors to the front passenger's MPCS unit, and do these input tests at the following connectors.

- If any test indicates a problem, find and correct the cause, then recheck the system.
- If all the input tests prove OK, go to step 17.

Cavity	Wire	Test condition	Test: Desired result	Possible cause if desired result is not obtained
A7	BLK	Under all conditions	Measure the voltage to ground: There should be less than 0.2 V.	• Poor ground (G506) • An open in the wire
B14	BLK	Under all conditions	Measure the voltage to ground: There should be less than 0.2 V.	• Poor ground (G506) • An open in the wire
A2	WHT	Under all conditions	Measure the voltage to ground: There should be battery voltage.	• Blown No. 15 (40 A) fuse in the under-hood fuse/relay box • Blown No. 7 (10 A) fuse in the driver's under-dash fuse/relay box • An open in the wire
A17	GRN	Front passenger's door lock knob switch in UNLOCK	Measure the voltage to ground: There should be less than 0.2 V.	• Poor ground (G506) • Faulty front passenger's door lock knob switch • An open in the wire
		Front passenger's door lock knob switch in LOCK	Measure the voltage to ground: There should be at least 5 V.	• Faulty front passenger's door lock knob switch • A short to ground in the wire
A26	BRN	Right rear door lock knob switch in UNLOCK	Measure the voltage to ground: There should be less than 0.2 V.	• Poor ground (G651) • Faulty right rear door lock knob switch • An open in the wire
		Right rear door lock knob switch in LOCK	Measure the voltage to ground: There should be at least 5 V.	• Faulty right rear door lock knob switch • A short to ground in the wire
A28	LT GRN	Front passenger's door open	Measure the voltage to ground: There should be less than 0.2 V.	• Poor ground (G506) • Faulty front passenger's door switch • An open in the wire
		Front passenger's door closed	Measure the voltage to ground: There should be at least 5 V.	• Faulty front passenger's door switch • A short to ground in the wire

(cont'd)

Control Unit Input Test (cont'd)

Left Rear Power Window Switch

17. Turn the ignition switch to LOCK (0), and remove the left rear power window switch (see page 22-372).

18. Disconnect the left rear power window switch 14P connector.

LEFT REAR POWER WINDOW SWITCH 14P CONNECTOR

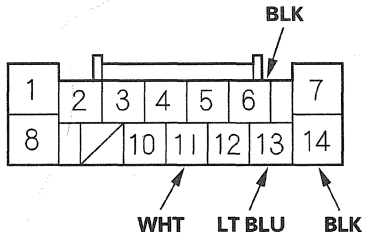

Wire side of female terminals

19. Inspect the connector and socket terminals to be sure they are all making good contact.

- If the terminals are bent, loose or corroded, repair them as necessary and recheck the system.
- If the terminals look OK, go to step 20.

20. Reconnect the connector to the switch, and do these input tests at the following connector.

- If any test indicates a problem, find and correct the cause, then recheck the system.
- If all the input tests prove OK, go to step 21.

Cavity	Wire	Test condition	Test: Desired result	Possible cause if desired result is not obtained
6	BLK	Under all conditions	Measure the voltage to ground: There should be less than 0.2 V.	• Poor ground (G601) • An open in the wire
14	BLK	Under all conditions	Measure the voltage to ground: There should be less than 0.2 V.	• Poor ground (G601) • An open in the wire
11	WHT	Under all conditions	Measure the voltage to ground: There should be battery voltage.	• Blown No. 15 (40 A) fuse in the under-hood fuse/relay box • Blown No. 6 (7.5 A) fuse in the driver's under-dash fuse/relay box • An open in the wire
13	LT BLU	Left rear door open	Measure the voltage to ground: There should be less than 0.2 V.	• Poor ground (G601) • Faulty left rear door switch • An open in the wire
		Left rear door closed	Measure the voltage to ground: There should be at least 5 V.	• Faulty left rear door switch • A short to ground in the wire

Right Rear Power Window Switch

21. Turn the ignition switch to LOCK (0), and remove the right rear power window switch (see page 22-372).

22. Disconnect the right rear power window switch 14P connector.

RIGHT REAR POWER WINDOW SWITCH 14P CONNECTOR

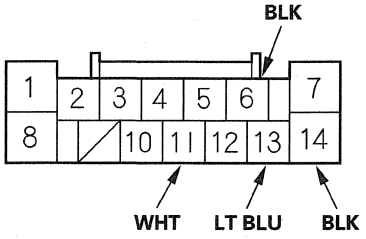

Wire side of female terminals

23. Inspect the connector and socket terminals to be sure they all making good contact.

- If the terminals are bent, loose or corroded, repair them as necessary and recheck the system.
- If the terminals look OK, go to step 24.

24. Reconnect the connector to the switch, and do these input tests at the following connector.

- If any test indicates a problem, find and correct the cause, then recheck the system.
- If all the input tests prove OK, go to step 25.

Cavity	Wire	Test condition	Test: Desired result	Possible cause if desired result is not obtained
6	BLK	Under all conditions	Measure the voltage to ground: There should be less than 0.2 V.	• Poor ground (G651) • An open in the wire
14	BLK	Under all conditions	Measure the voltage to ground: There should be less than 0.2 V.	• Poor ground (G651) • An open in the wire
11	WHT	Under all conditions	Measure the voltage to ground: There should be battery voltage.	• Blown No. 15 (40 A) fuse in the under-hood fuse/relay box • Blown No. 6 (7.5 A) fuse in the driver's under-dash fuse/relay box • An open in the wire
13	LT BLU	Right rear door open	Measure the voltage to ground: There should be less than 0.2 V.	• Poor ground (G651) • Faulty right rear door switch • An open in the wire
		Right rear door closed	Measure the voltage to ground: There should be at least 5 V.	• Faulty right rear door switch • A short to ground in the wire

25. If multiple failures are found on more than one control unit, replace the driver's under-dash fuse/relay box (includes the MICU) (see page 22-88). If input failures are related to a particular control unit, replace the control unit.

Door Lock Actuator Test

Driver's Door and Left Rear Door

1. Remove the door panel (see page 20-9).
2. Disconnect the 10P connector (A) from the actuator (B).

   NOTE: The illustration shows the driver's door.

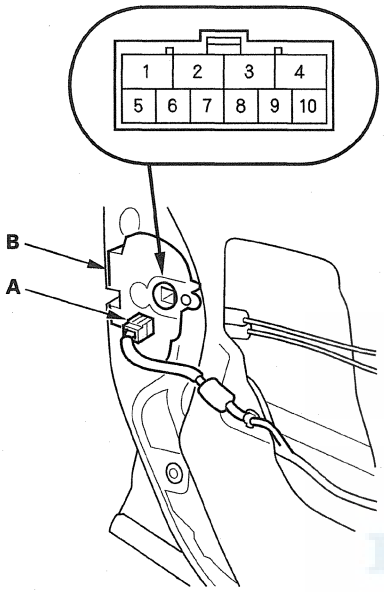

3. Check actuator operation by connecting power and ground according to the table. To prevent damage to the actuator, apply battery voltage only momentarily.

Terminal / Position	1	2
LOCK	⊕	⊖
UNLOCK	⊖	⊕

4. If the actuator does not operate as specified, replace it.

Front Passenger's Door and Right Rear Door

1. Remove the door panel (see page 20-9).
2. Disconnect the 10P connector (A) from the actuator (B).

   NOTE: The illustration shows the front passenger's door.

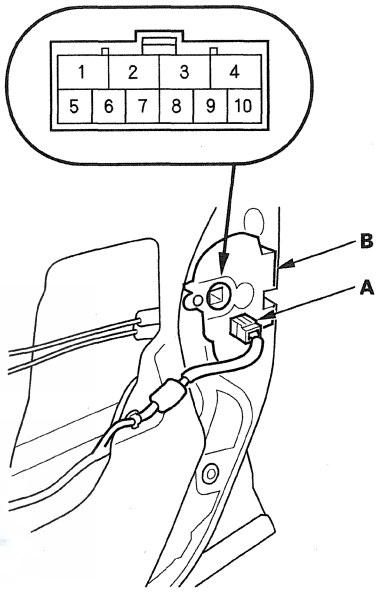

3. Check actuator operation by connecting power and ground according to the table. To prevent damage to the actuator, apply battery voltage only momentarily.

Terminal / Position	3	4
LOCK	⊕	⊖
UNLOCK	⊖	⊕

4. If the actuator does not operate as specified, replace it.

Door Lock Knob Switch Test

Driver's Door

1. Remove the driver's door panel (see page 20-9).
2. Disconnect the 10P connector (A) from the actuator (B).

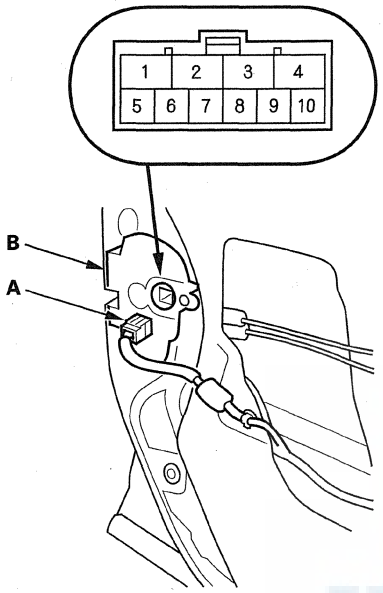

3. Check for continuity between the terminals.
   - There should be continuity between terminals No. 6 and No. 5 when the door lock knob switch is in the LOCK position and no continuity when the switch is in the UNLOCK position.
   - There should be continuity between terminals No. 7 and No. 5 when the door lock knob switch is in the UNLOCK position and no continuity when the switch is in the LOCK position.
4. If the continuity is not as specified, replace the door lock actuator.

Passenger's Doors

1. Remove the passenger's door panel (see page 20-9).
2. Disconnect the 10P connector (A) from the actuator (B).

   NOTE: The illustration shows the front passenger's door.

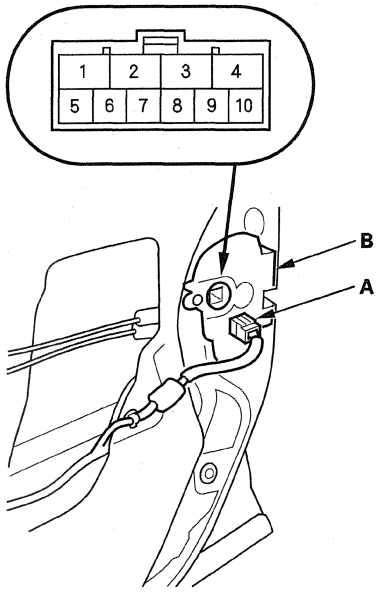

3. Check for continuity between the terminals. There should be continuity between terminals No. 8 [No. 7] and No. 10 [No. 5] when the door lock knob switch in the UNLOCK position and no continuity when the switch is in the LOCK position.
   [ ] : Left rear door
4. If the continuity is not specified, replace the door lock actuator.

Door Lock Switch Test

1. Remove the door panel (see page 20-9).
2. Disconnect the 4P connector (A), remove the two screws, then remove the door lock switch (B).

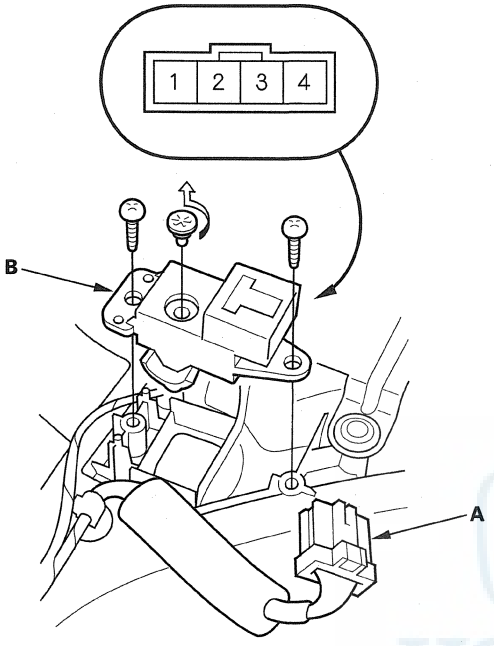

3. Check for continuity between the terminals.
   - There should be continuity between terminals No. 2 and No. 4 when the door lock switch is in the LOCK position.
   - There should be no continuity between terminals No. 2 and No. 4 when the door lock switch is in the neutral position or UNLOCK position.
   - There should be continuity between terminals No. 2 and No. 3 when the door lock switch is in the UNLOCK position.
   - There should be no continuity between terminals No. 2 and No. 3 when the door lock switch is in the neutral position or LOCK position.
   - There should be continuity between terminals No. 1 (+) and No. 2 (−) (bulb check).
4. If the continuity is not as specified, replace the bulb or switch.

Door Key Cylinder Switch Test

1. Remove the driver's door panel (see page 20-9).
2. Disconnect the 10P connector (A) from the key cylinder switch (B).

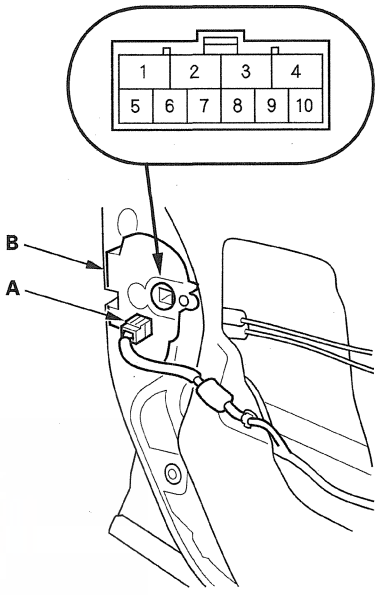

3. Check for continuity between the terminals.
   - There should be continuity between terminals No. 9 and No. 5 when the door key cylinder switch is in LOCK position.
   - There should be no continuity between terminals No. 9 and No. 5 when the door key cylinder switch is in the neutral or UNLOCK position.
   - There should be continuity between terminals No. 8 and No. 5 when the door key cylinder switch is in UNLOCK position.
   - There should be no continuity between terminals No. 8 and No. 5 when the door key cylinder switch is in the neutral or LOCK position.
4. If the continuity is not as specified, replace the door key cylinder assembly (see page 20-12).

Security Hood Switch Test

1. Open the hood.
2. Disconnect the 2P connector (A) from the hood switch (B).

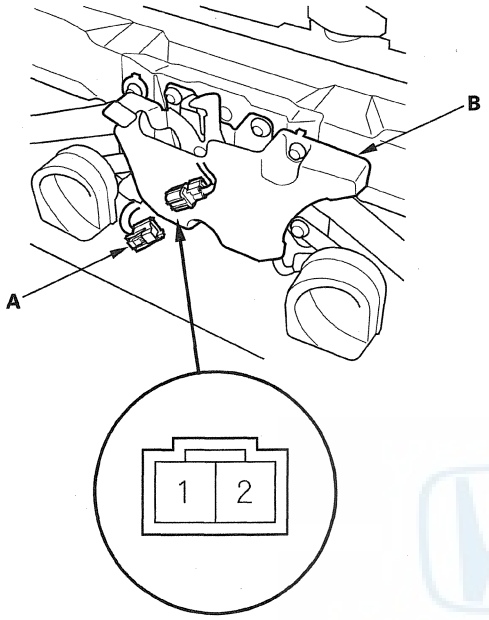

3. Check for continuity between the terminals. There should be continuity between terminals No. 1 and No. 2 when the hood is opened (latch released). There should be no continuity between terminals No. 1 and No. 2 when the hood is closed (latch pushed down).
4. If the continuity is not as specified, replace the security hood switch.

Remote Test

NOTE:
- If the doors unlock or lock with the remote, but the LED on the remote does not come on, the LED is faulty; replace the remote.
- If any door is open, you cannot lock the doors with the remote.
- If the UNLOCK button is pressed on the remote and a door is not opened within 30 seconds, the doors relock automatically.
- The doors do not lock or unlock with the remote if the key is in the ignition switch.
- Panic function will not operate if the ignition switch is ON (II).
- If the lock and unlock function works normally, but the driving position memory system (DPMS) is not linked, confirm the link is turned ON with the HDS, then check for problems in the DPMS (see page 22-556) or B-CAN System Diagnosis Test Mode A (see page 22-131). Refer to System Description (see page 22-163) for more information.

With HDS

Do a remote test using the HDS by selecting the KEYLESS INSPECTION menu.

(cont'd)

Remote Test (cont'd)

Without HDS

1. Open the remote and check for water damage.

   - If you find any water damage, replace the remote.
   - If there is no water damage, go to step 2.

2. Replace the remote batteries (A) with new ones, and try to lock and unlock the doors with the remote by pressing the lock or unlock button 5 or 6 times.

   - If the doors lock and unlock, the remote is OK.
   - If the doors don't lock and unlock, go to step 3.

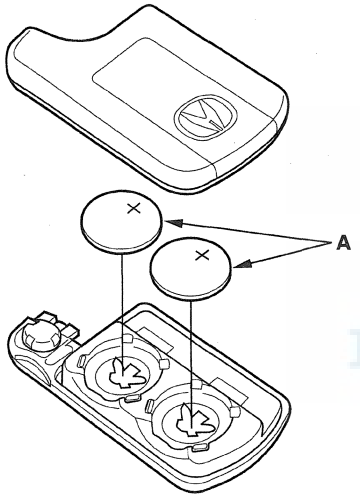

3. Reprogram the remote with the HDS, then try to lock and unlock the doors.

   - If the doors lock and unlock, the remote is OK.
   - If the doors don't lock and unlock, try and program to another vehicle.
     - If the remote programs to another vehicle, go to B-CAN System Diagnosis Test Mode A (see page 22-131).
     - If the remote will not program to another vehicle, replace it.

Component Location Index

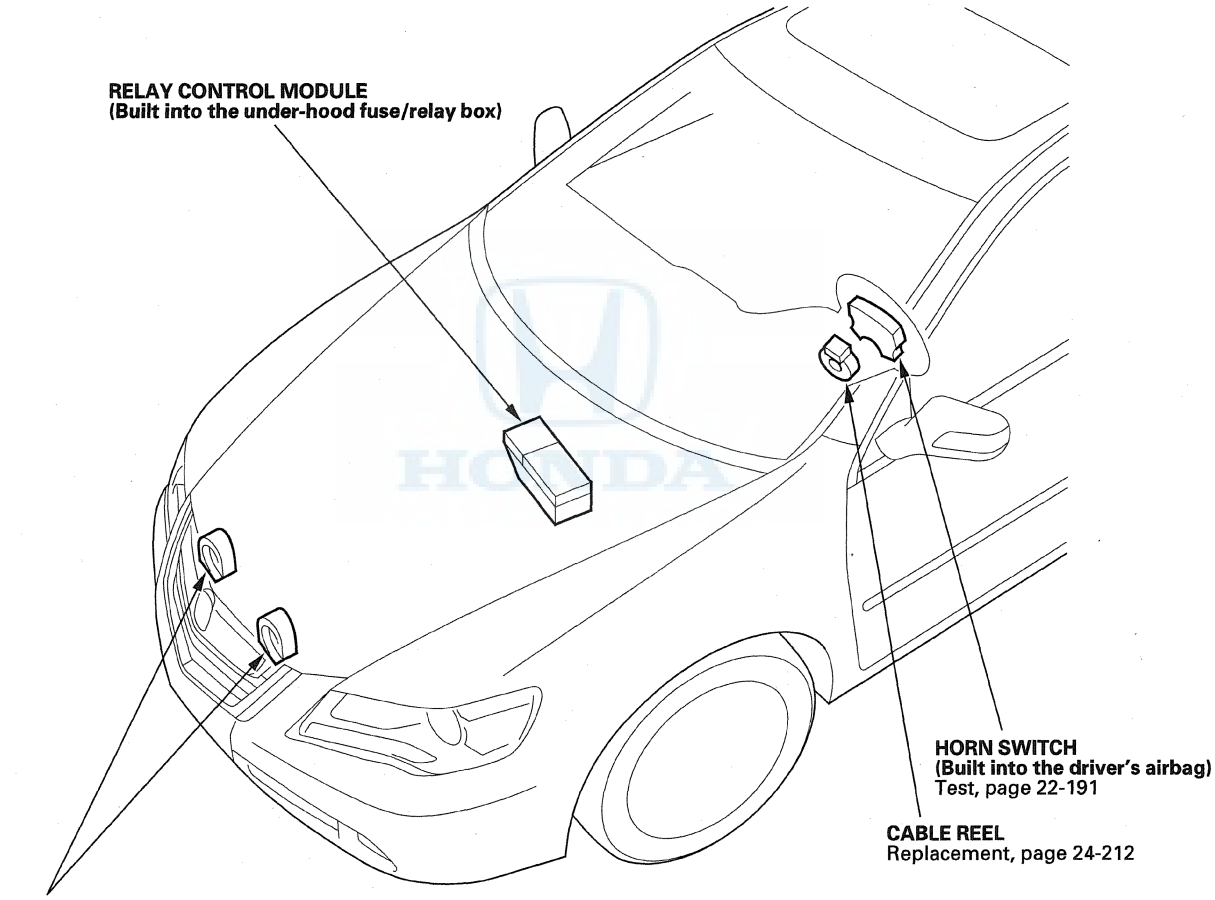

Horns

Circuit Diagram

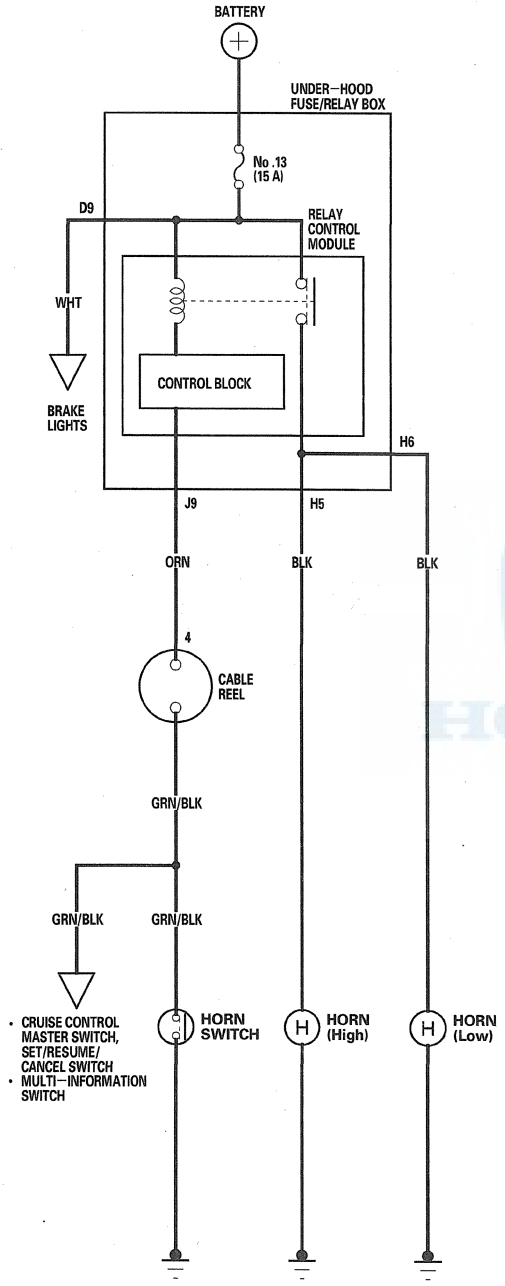

Horn Test/Replacement

1. Remove the front bumper (see page 20-149).
2. Disconnect the 1P connector (A) from each horn (B).

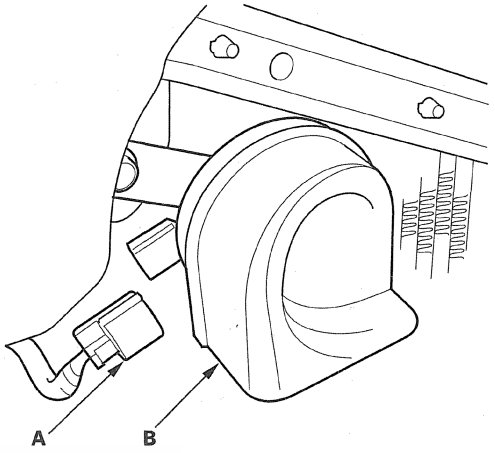

3. Test the horn by connecting battery power to the terminal (A) and grounding the bracket (B). The horn should sound.

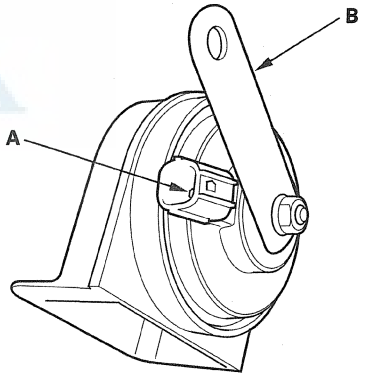

4. If it fails to sound, replace it.

Horn Switch Test

SRS components are located in this area. Review the SRS component locations (see page 24-12) and the precautions and procedures (see page 24-14) before doing repairs or servicing.

1. Remove the driver's dashboard undercover (see page 20-100), and the driver's dashboard lower cover (see page 20-100), then remove the steering column covers (see page 17-25).

2. Disconnect the 20P connector (A) from the cable reel (B).

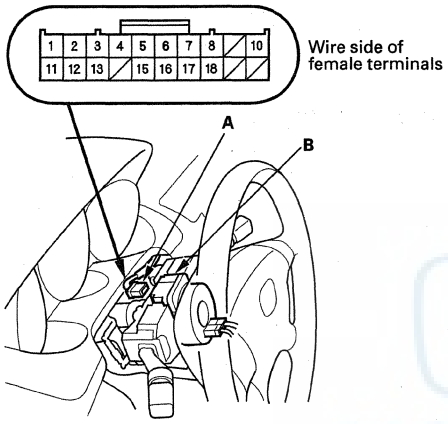

3. Using a jumper wire, connect dashboard wire harness 20P connector terminal No. 4 to body ground. The horns should sound.

   - If the horns sound, go to step 4.
   - If the horns don't sound, check these items:
     - No. 13 (15 A) fuse in the under-hood fuse/relay box
     - Relay control module in the under-hood fuse/relay box
     - Horns (see page 22-190)
     - An open in the wire

CABLE REEL 20P CONNECTOR

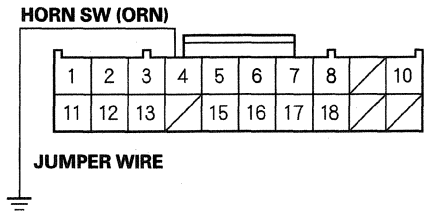

Wire side of female terminals

4. Reconnect the 20P connector (A) to the cable reel (B).

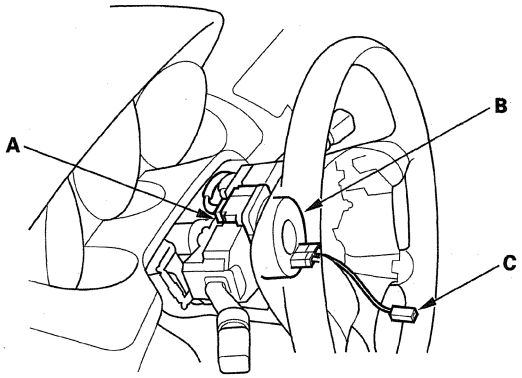

5. Remove the driver's airbag assembly (see page 24-197), and disconnect horn switch 1P connector (C) from the driver's airbag.

6. Check for continuity between cable reel 20P connector terminal No. 4 and horn switch terminal 1P. There should be continuity.

   - If there is continuity, check the installation of the driver's airbag assembly and the steering wheel. If OK, replace the driver's airbag assembly.
   - If there is no continuity, check these items:
     - Cable reel
     - An open in the wire

CABLE REEL 20P CONNECTOR
Wire side of female terminals

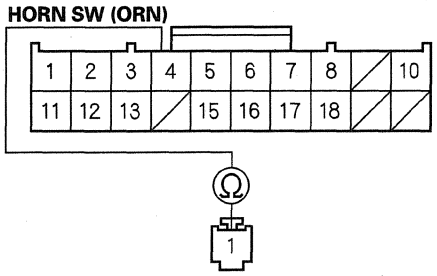

HORN SWITCH 1P TERMINAL
Wire side of female terminals

Component Location Index

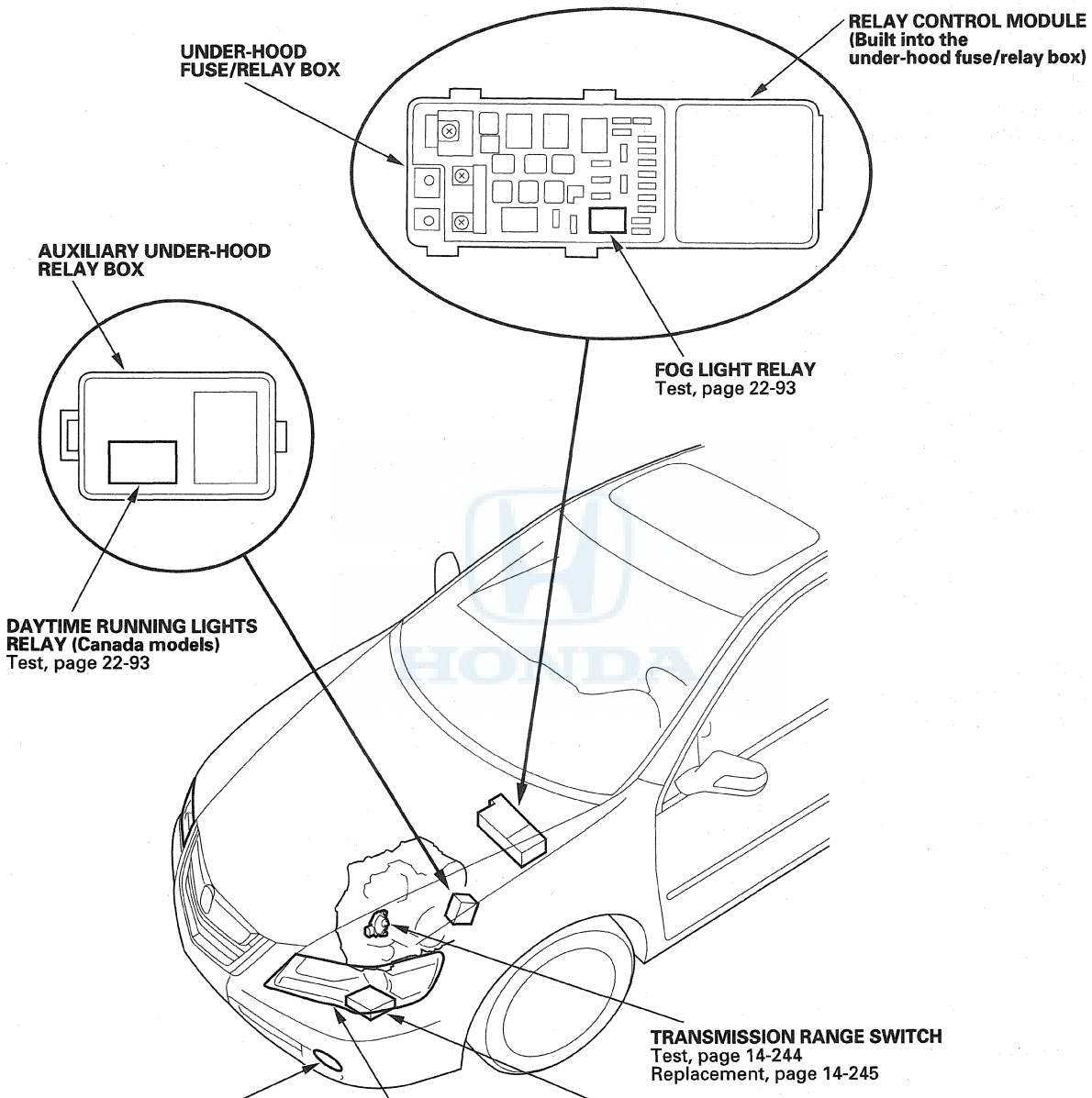

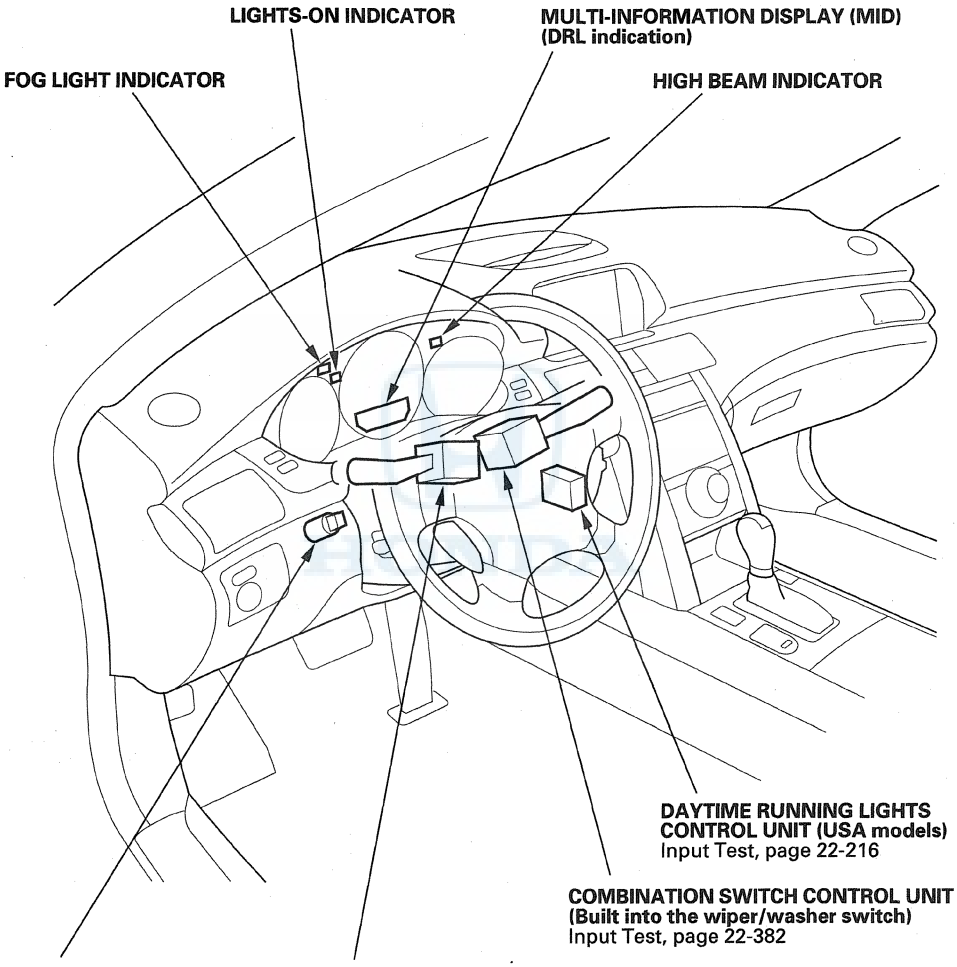
LIGHTS-ON INDICATOR
MULTI-INFORMATION DISPLAY (MID)
(DRL indication)
FOG LIGHT INDICATOR
HIGH BEAM INDICATOR
DAYTIME RUNNING LIGHTS
CONTROL UNIT (USA models)
Input Test, page 22-216
COMBINATION SWITCH CONTROL UNIT
(Built into the wiper/washer switch)
Input Test, page 22-382
BRAKE PEDAL
POSITION SWITCH
Test, page 22-227
Replacement, page 19-6
COMBINATION LIGHT SWITCH
Test/Replacement, page 22-214

(cont'd)

Component Location Index (cont'd)

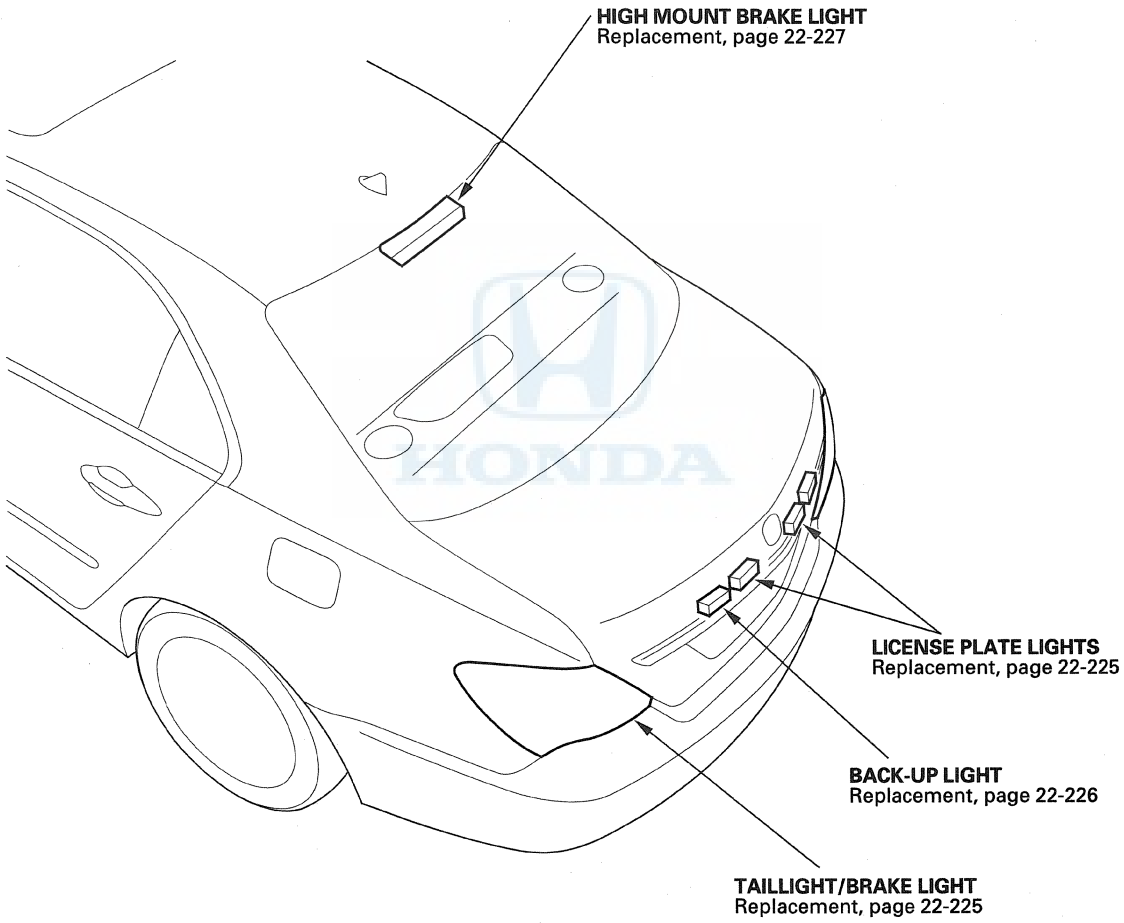

Circuit Diagram - Fog Lights

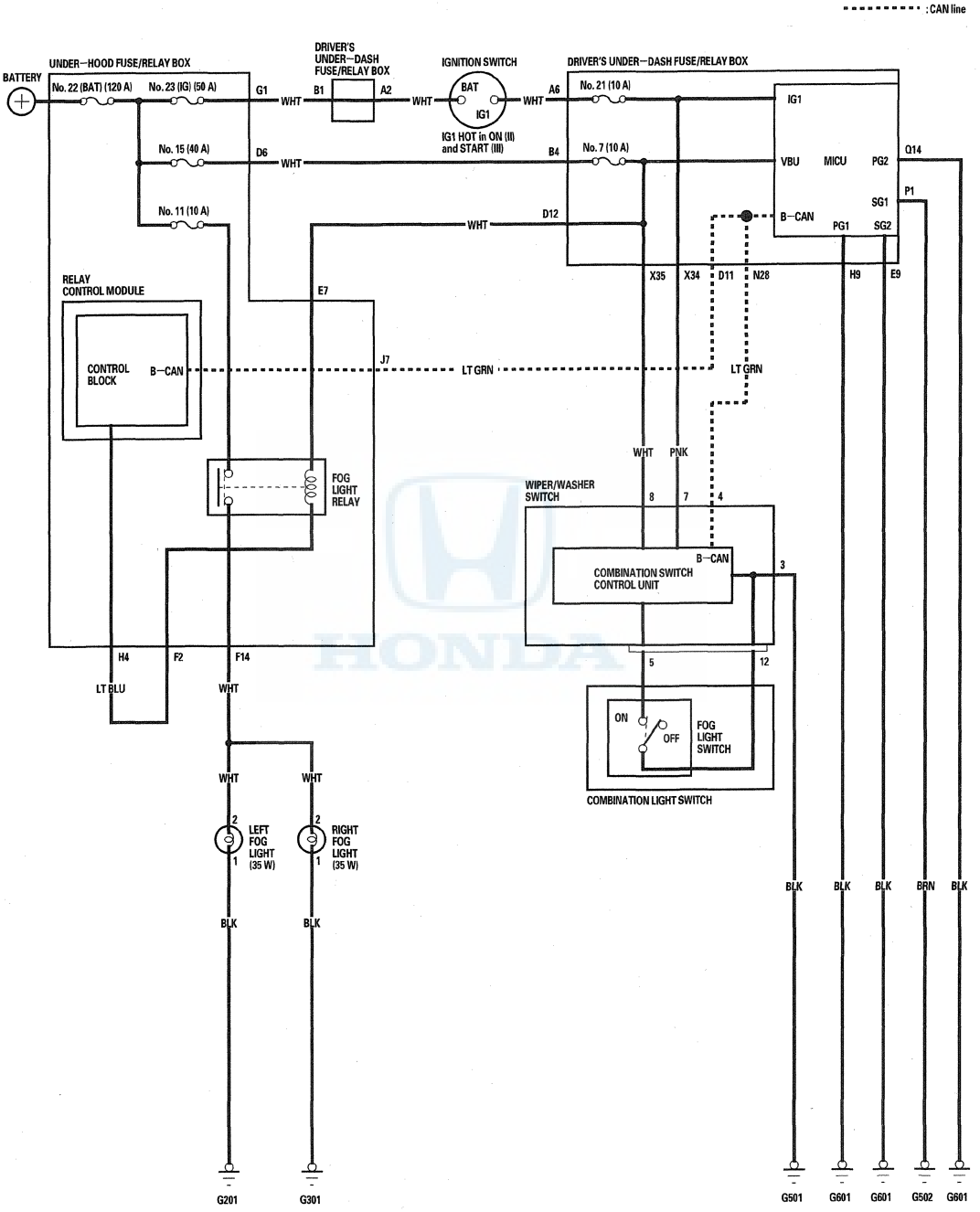

Circuit Diagram

USA models

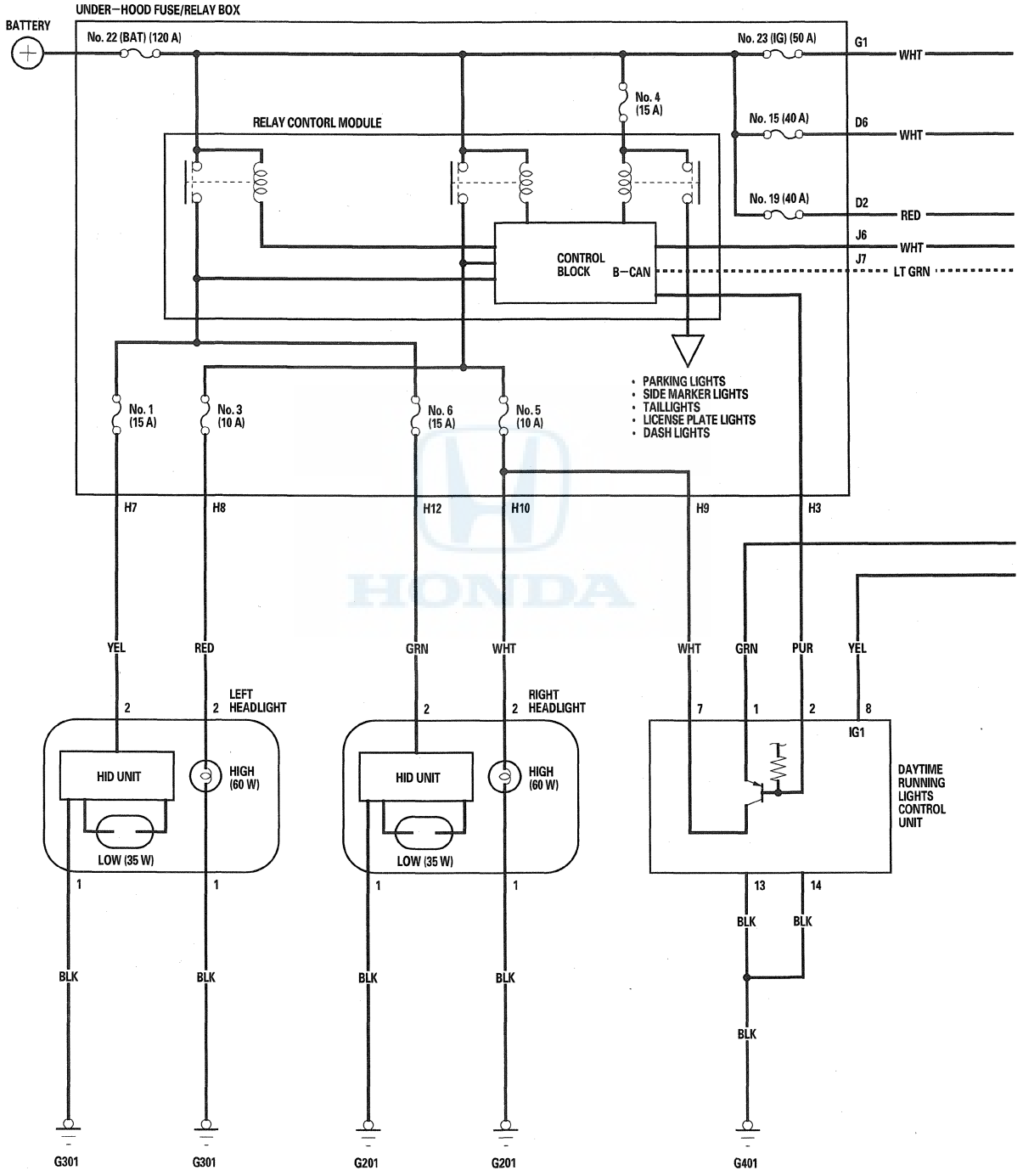

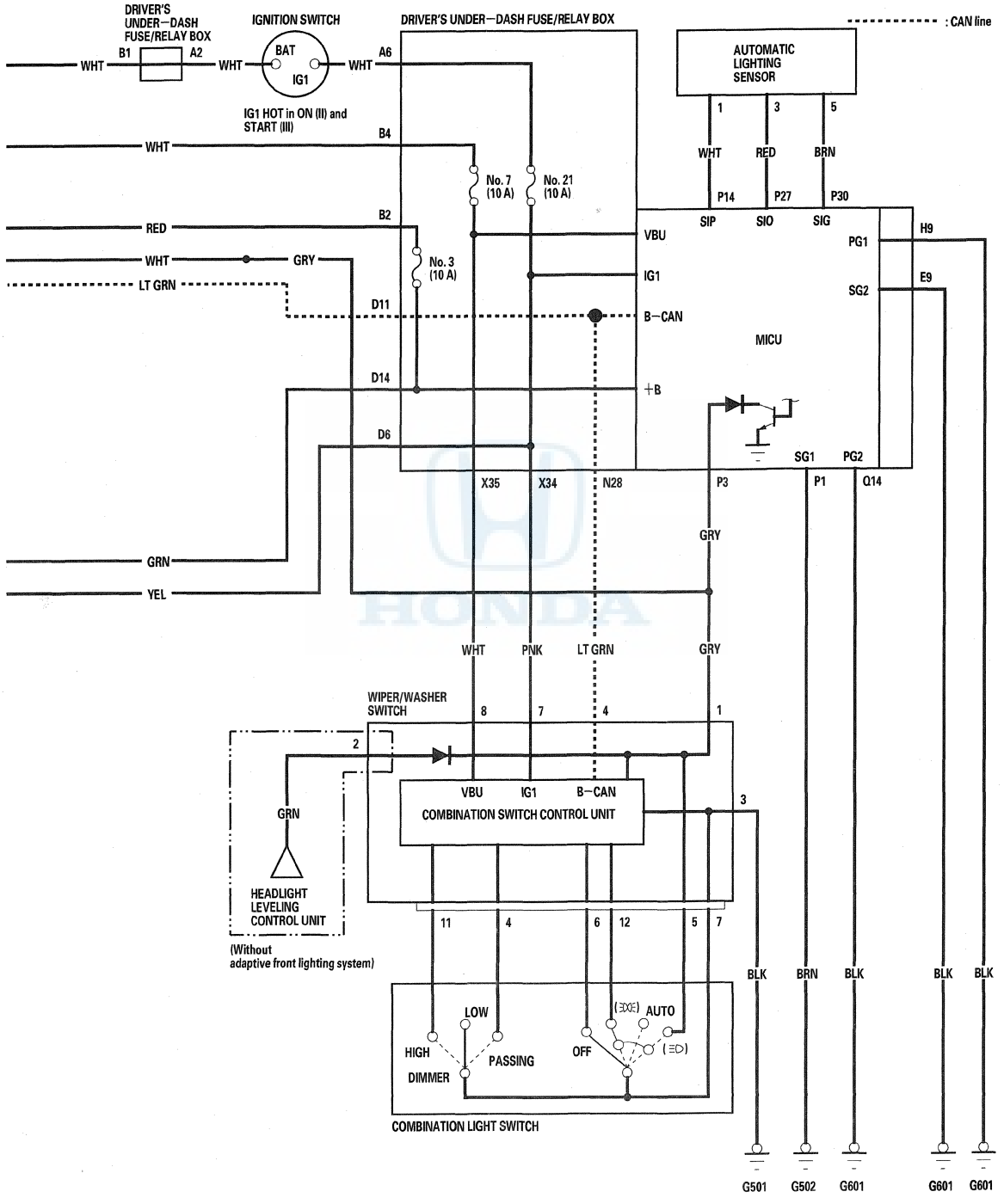
DRIVER'S UNDER-DASH FUSE/RELAY BOX
B1
A2
WHT
WHT
IGNITION SWITCH
BAT
IG1
WHT
A6
IG1 HOT in ON (II) and START (III)
DRIVER'S UNDER-DASH FUSE/RELAY BOX
: CAN line
AUTOMATIC LIGHTING SENSOR
1
3
5
WHT
RED
BRN
P14
P27
P30
SIP
SIO
SIG
B4
WHT
No. 7 (10 A)
No. 21 (10 A)
B2
RED
No. 3 (10 A)
WHT
GRY
LT GRN
D11
D14
D6
VBU
IG1
B-CAN
+B
MICU
PG1
SG2
H9
E9
SG1
PG2
X35
X34
N28
P3
P1
Q14
GRY
GRN
YEL
WHT
PNK
LT GRN
GRY
WIPER/WASHER SWITCH
8
7
4
1
2
3
VBU
IG1
B-CAN
COMBINATION SWITCH CONTROL UNIT
GRN
HEADLIGHT LEVELING CONTROL UNIT
(Without adaptive front lighting system)
11
4
6
12
5
7
LOW
HIGH
PASSING
DIMMER
OFF
AUTO
COMBINATION LIGHT SWITCH
BLK
BRN
BLK
BLK
BLK
G501
G502
G601
G601
G601

Circuit Diagram (cont'd)

Canada models

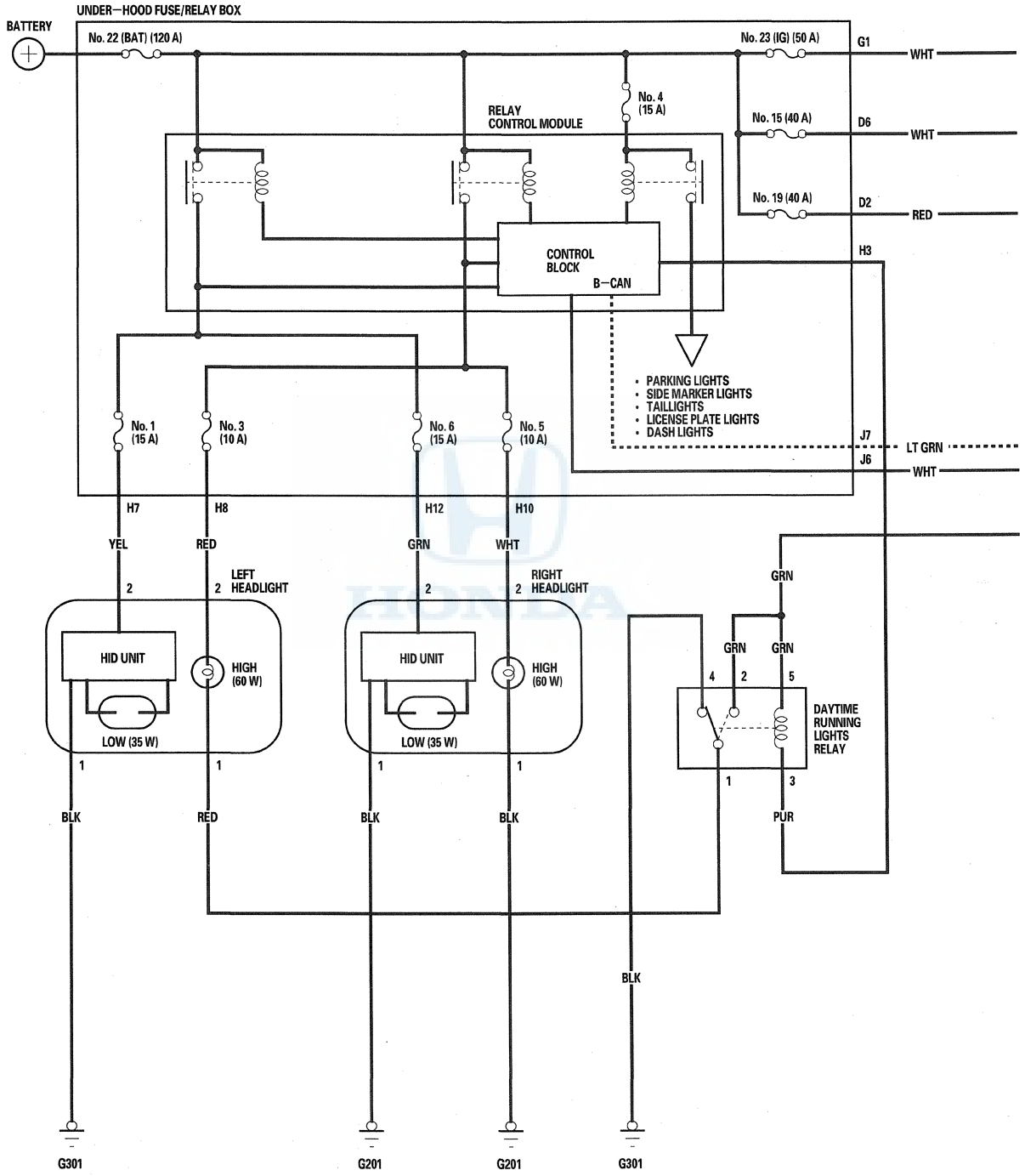

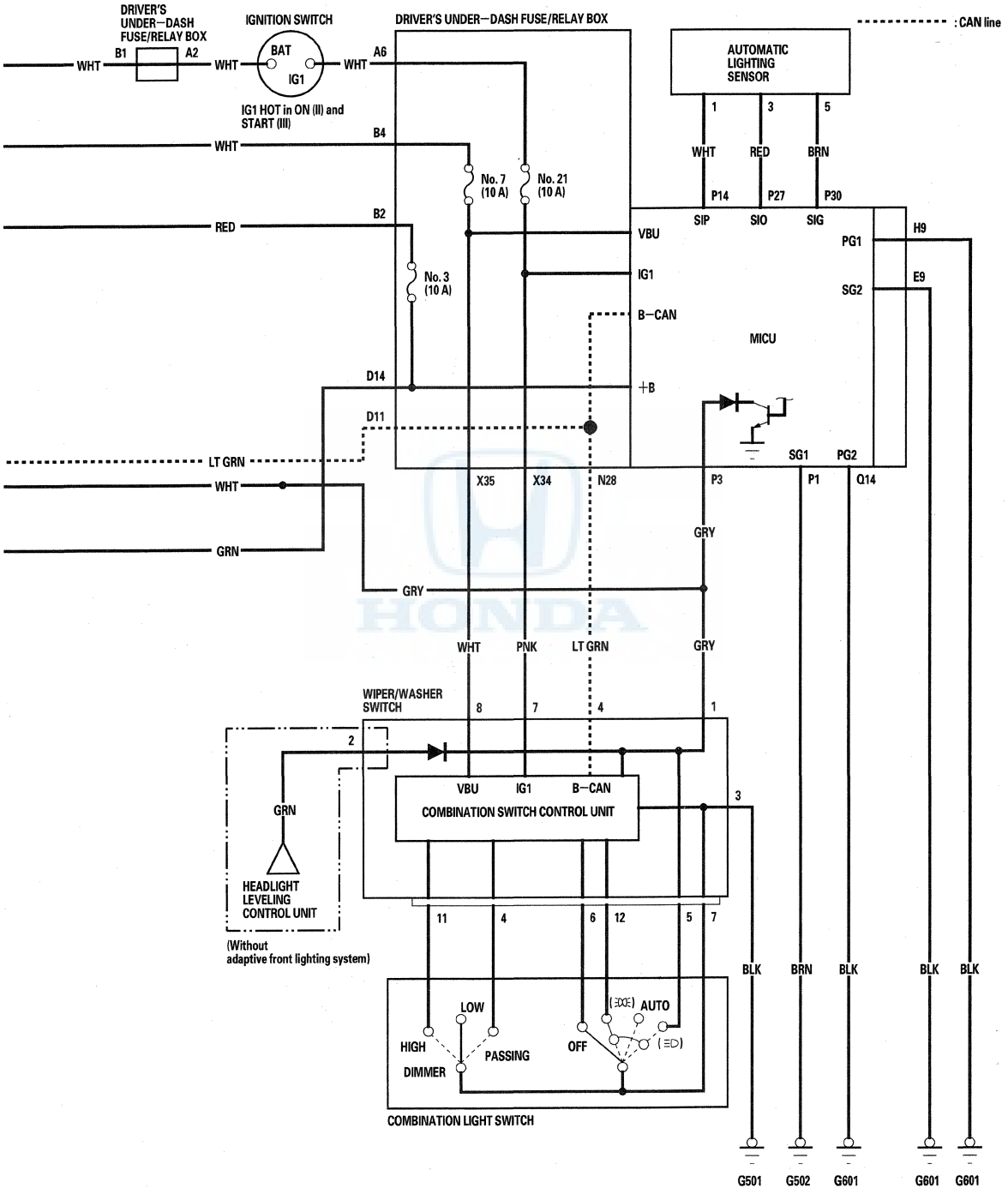
DRIVER'S UNDER–DASH FUSE/RELAY BOX
B1
A2
WHT
WHT
IGNITION SWITCH
BAT
IG1
WHT
A6
IG1 HOT in ON (II) and START (III)
DRIVER'S UNDER–DASH FUSE/RELAY BOX
: CAN line
AUTOMATIC LIGHTING SENSOR
1
3
5
WHT
RED
BRN
P14
P27
P30
SIP
SIO
SIG
B4
WHT
No. 7 (10 A)
No. 21 (10 A)
B2
RED
No. 3 (10 A)
VBU
IG1
B–CAN
MICU
PG1
H9
SG2
E9
D14
+B
D11
SG1
PG2
LT GRN
WHT
GRN
X35
X34
N28
P3
P1
Q14
GRY
GRY
WHT
PNK
LT GRN
GRY
WIPER/WASHER SWITCH
8
7
4
1
2
VBU
IG1
B–CAN
COMBINATION SWITCH CONTROL UNIT
3
GRN
HEADLIGHT LEVELING CONTROL UNIT
(Without adaptive front lighting system)
11
4
6
12
5
7
BLK
BRN
BLK
BLK
BLK
LOW
HIGH
PASSING
DIMMER
OFF
AUTO
COMBINATION LIGHT SWITCH
G501
G502
G601
G601
G601

Circuit Diagram - Parking/Side Marker/License Plate Lights, Taillights

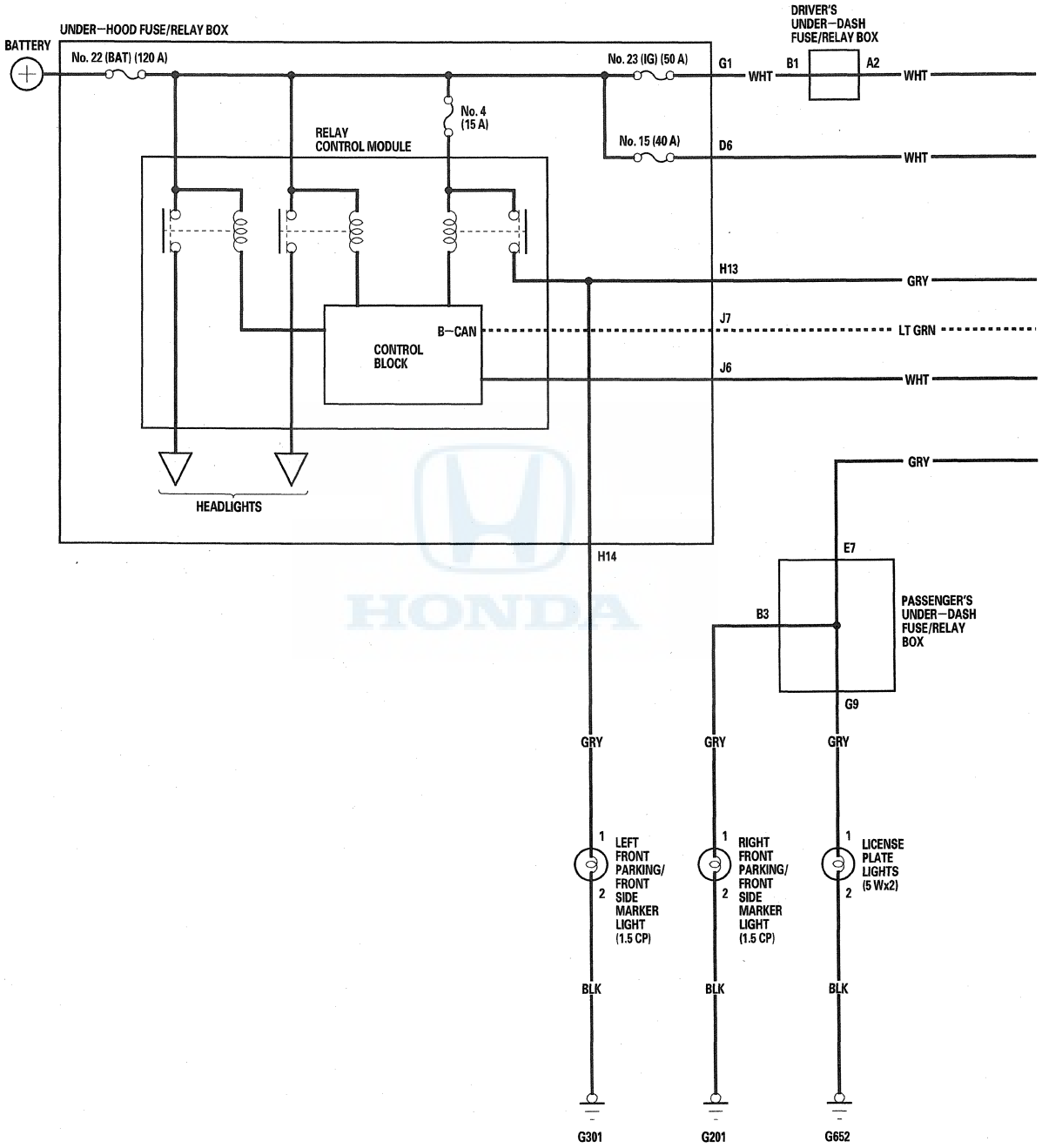

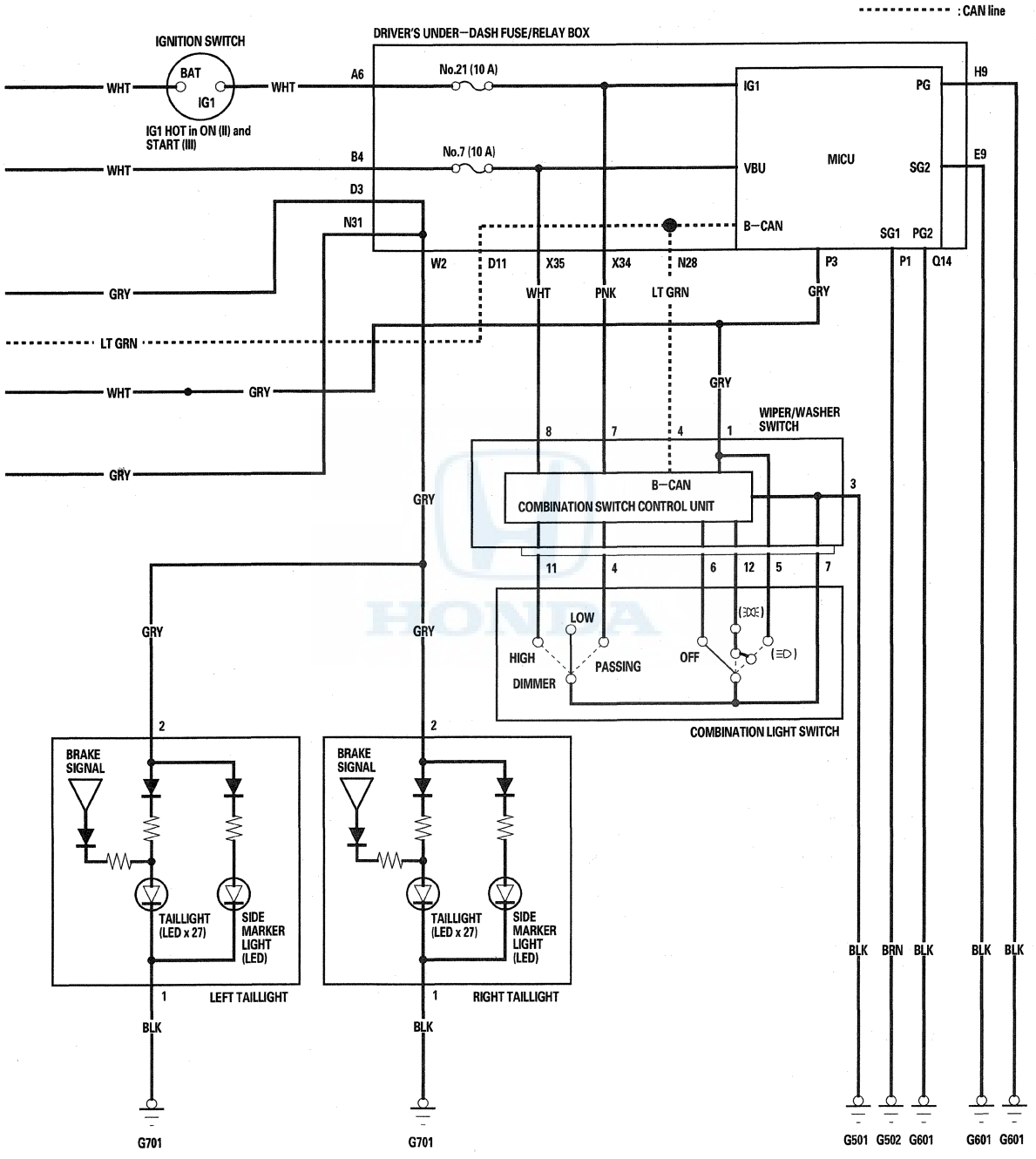
: CAN line
IGNITION SWITCH
BAT
IG1
IG1 HOT in ON (II) and START (III)
DRIVER'S UNDER-DASH FUSE/RELAY BOX
No.21 (10 A)
No.7 (10 A)
MICU
IG1
PG
VBU
SG2
B-CAN
SG1
PG2
WHT
GRY
LT GRN
PNK
BLK
BRN
WIPER/WASHER SWITCH
B-CAN
COMBINATION SWITCH CONTROL UNIT
LOW
HIGH
PASSING
DIMMER
OFF
COMBINATION LIGHT SWITCH
BRAKE SIGNAL
TAILLIGHT (LED x 27)
SIDE MARKER LIGHT (LED)
LEFT TAILLIGHT
RIGHT TAILLIGHT
G701
G501
G502
G601

Circuit Diagram - Brake Lights

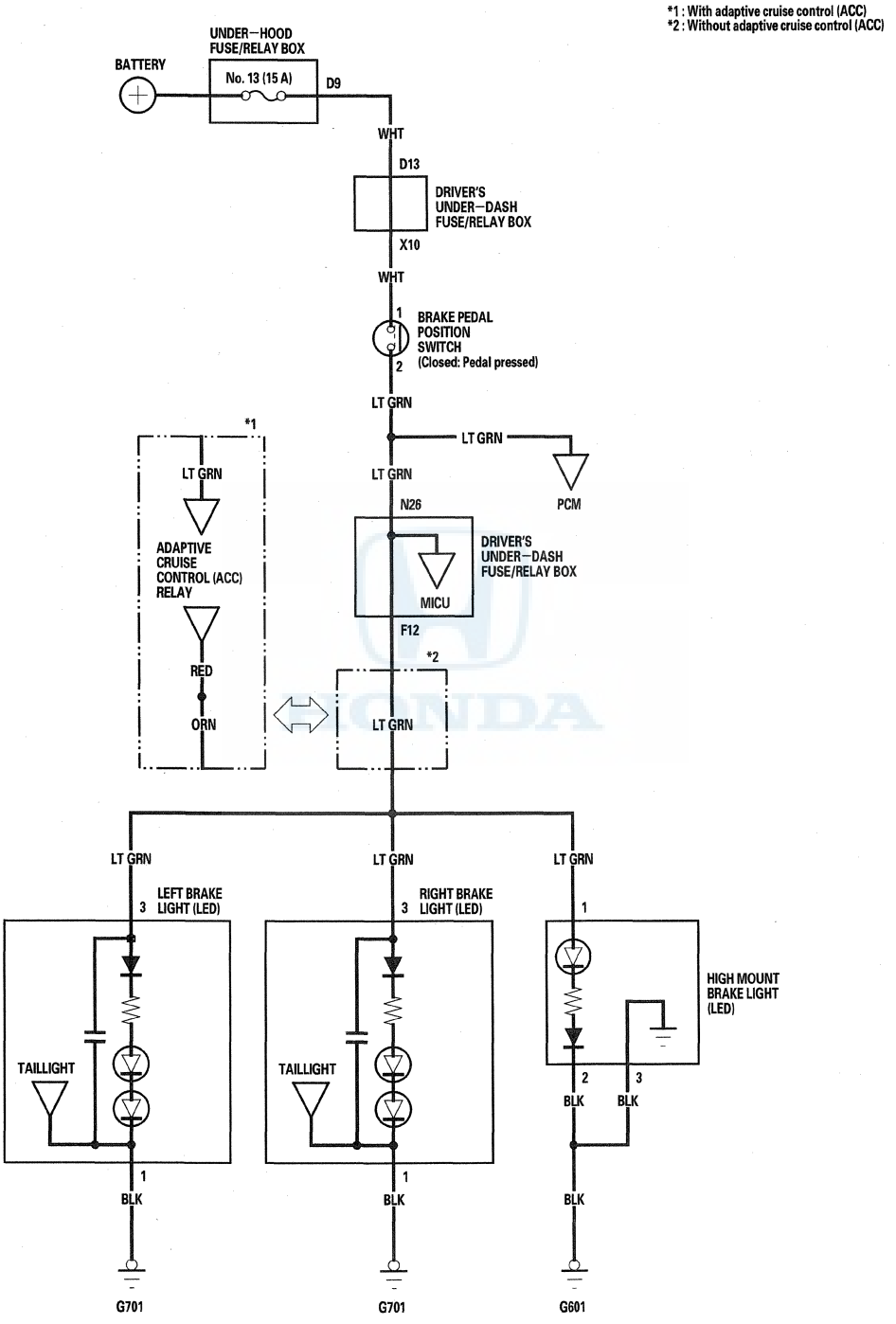

Circuit Diagram - Back-up Lights

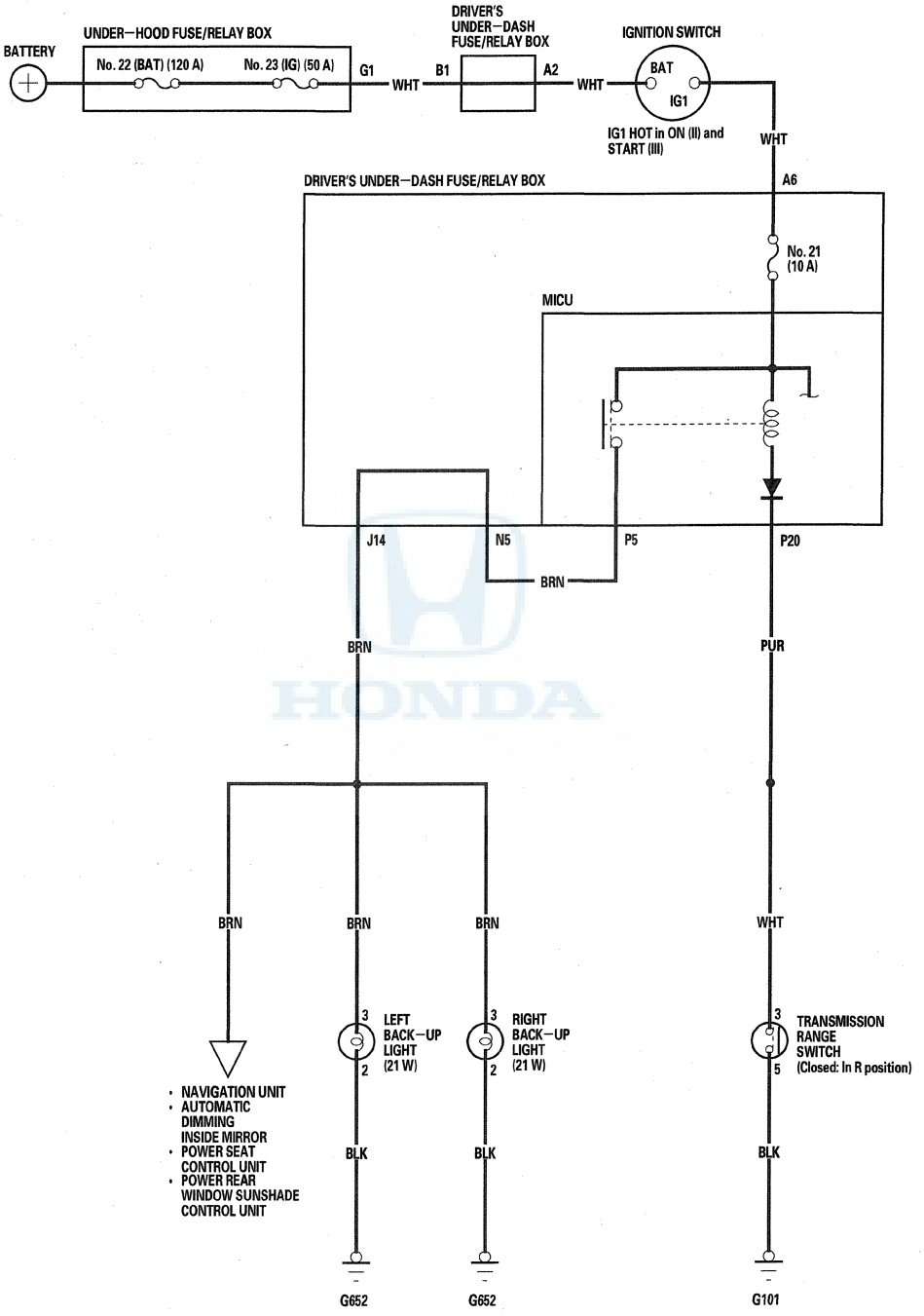

DTC Troubleshooting

DTC B1075: Headlight Signal Error

NOTE: If you are troubleshooting multiple DTCs, be sure to follow the instructions in B-CAN System Diagnosis Test Mode A (see page 22-131).

1. Clear the DTCs with the HDS.
2. Turn the headlights switch from the OFF position to the ON position.
3. Check for DTCs with the HDS.

   Is DTC B1075 indicated?

   YES—Go to step 4.

   NO—Intermittent failure, the headlight circuit is OK at this time. Check for loose or poor connections at under-hood fuse/relay box connector J (10P), and at the combination switch connector. ■
4. With the headlight switch OFF, select LIGHTING SYSTEM from the HDS, and enter DATA LIST.
5. Check the ON/OFF information of the HEADLIGHT SWITCH (BACK-UP) in the DATA LIST.

   Is the information indicator OFF?

   YES—Go to step 6.

   NO—Go to step 10.
6. Turn the headlight switch ON.
7. Check the ON/OFF information of the HEADLIGHT SWITCH (BACK-UP) in the DATA LIST.

   Is the information indicator ON?

   YES—Faulty relay control module; replace the under-hood fuse/relay box (see page 22-84). ■

   NO—Go to step 8.
8. Disconnect under-hood fuse/relay box connector J (10P) and the wiper/washer switch 8P connector.
9. Check for continuity between under-hood fuse/relay box connector J (10P) terminal No. 6 and wiper/washer switch (combination switch control unit) 8P connector terminal No. 1.

UNDER-HOOD FUSE/RELAY BOX CONNECTOR J (10P)
Wire side of female terminals

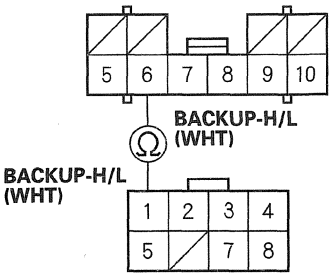

WIPER/WASHER SWITCH 8P CONNECTOR
Wire side of female terminals

Is there continuity?

YES—Faulty combination switch control unit or relay control module; substitute a known-good wiper/washer switch and retest. If the DTC is no longer present, replace the original wiper/washer switch. If the DTC is still present, the relay control module is faulty, replace the under-hood fuse/relay box (see page 22-84). ■

NO—Repair an open in the WHT wire. ■

10. Disconnect under-hood fuse/relay box connector J (10P).

11. Check for continuity between under-hood fuse/relay box connector J (10P) terminal No. 6 and body ground.

UNDER-HOOD FUSE/RELAY BOX CONNECTOR J (10P)

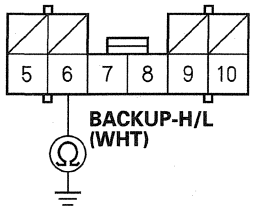

Wire side of female terminals

Is there continuity?

YES—Go to step 12.

NO—Faulty relay control module; replace the under-hood fuse/relay box (see page 22-84). ■

12. Disconnect the combination light switch 12P connector from the wiper/washer switch.

13. Check for continuity between under-hood fuse/relay box connector J (10P) terminal No. 6 and body ground.

UNDER-HOOD FUSE/RELAY BOX CONNECTOR J (10P)

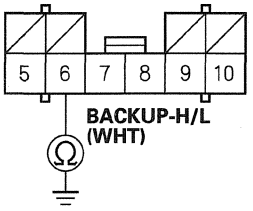

Wire side of female terminals

Is there continuity?

YES—Go to step 14.

NO—Faulty combination light switch; replace it. ■

14. Disconnect the wiper/washer switch 8P connector.

15. Check for continuity between under-hood fuse/relay box connector J (10P) terminal No. 6 and body ground.

UNDER-HOOD FUSE/RELAY BOX CONNECTOR J (10P)

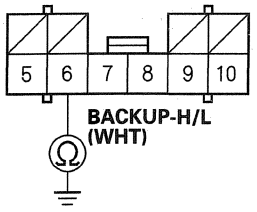

Wire side of female terminals

Is there continuity?

YES—Go to step 16.

NO—Faulty combination switch control unit; replace the wiper/washer switch. ■

16. Disconnect driver's under-dash fuse/relay box connector P (30P).

17. Check for continuity between under-hood fuse/relay box connector J (10P) terminal No. 6 and body ground.

UNDER-HOOD FUSE/RELAY BOX CONNECTOR J (10P)

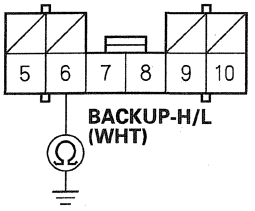

Wire side of female terminals

Is there continuity?

YES—Repair a short in the WHT wire. ■

NO—Faulty combination switch control unit; replace the wiper/washer switch. ■

DTC Troubleshooting (cont'd)

DTC B1078: Daytime Running Lights Malfunction (Canada)

NOTE: If you are troubleshooting multiple DTCs, be sure to follow the instructions in B-CAN System Diagnosis Test Mode A (see page 22-131).

1. Clear the DTCs with the HDS.
2. Turn the ignition switch to LOCK (0) and then back to ON (II).
3. Press the parking brake pedal.
4. Check for DTCs with the HDS.

   Is DTC B1078 indicated?

   YES—Go to step 5.

   NO—Intermittent failure, the system is OK at this time. Check for loose or poor connections. ■
5. Turn the headlight high beam ON.

   Do both headlights come on?

   YES—Go to step 6.

   NO—Go to step 9.
6. Turn the headlight switch OFF.
7. Select LIGHTING SYSTEM from the HDS, and enter DATA LIST.
8. Check the ON/OFF information of the DRL Command in the DATA LIST.

   Is the information indicator ON?

   YES—Check the PUR wire between under-hood fuse/relay box connector H (14P) terminal No. 3 and the daytime running lights relay for an open/short. If OK, replace the daytime running lights relay. ■

   NO—Go to relay control module input test (see page 22-158). ■
9. Check for the No. 3 (10 A) and No. 5 (10 A) fuses in the under-hood fuse/relay box.

   Are both fuses OK?

   YES—Go to step 10.

   NO—Replace the blown fuse and recheck the system. ■
10. Check the headlight bulbs.

    Are both bulbs OK?

    YES—Go to step 11.

    NO—Replace the blown bulb and recheck the system. ■
11. Disconnect the 2P connector from each headlight high beam.
12. Disconnect under-hood fuse/relay box connector H (14P).

13. Check for continuity between left headlight high beam 2P connector terminal No. 2 and under-hood fuse/relay box connector H (14P) terminal No. 8, and between right headlight high beam 2P connector terminal No. 2 and under-hood fuse/relay box connector H (14P) terminal No. 10.

UNDER-HOOD FUSE/RELAY BOX CONNECTOR H (14P)

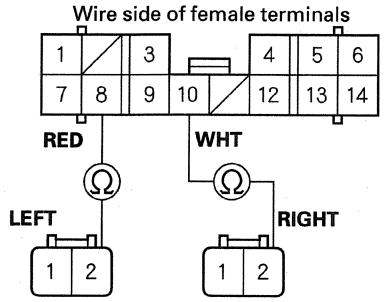

HEADLIGHT (HIGH BEAM) CONNECTORS (2P)

Wire side of female terminals

Is there continuity?

YES—Go to step 14.

NO—Repair an open in the wire. ■

14. Check for continuity between each headlight high beam 2P connector terminal No. 1 and body ground.

HEADLIGHT (HIGH BEAM) CONNECTORS (2P)

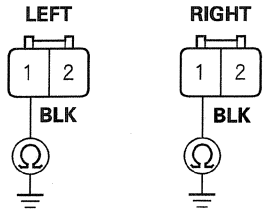

Wire side of female terminals

Is there continuity?

YES—Faulty relay control module; replace the under-hood fuse/relay box (see page 22-84). ■

NO—Check the daytime running lights relay (left headlight only) (see page 22-93). If the relay is OK, repair an open in the wire or poor ground (G201, G301). ■

DTC Troubleshooting (cont'd)

DTC B1079: Daytime Running Lights Malfunction (USA)

NOTE: If you are troubleshooting multiple DTCs, be sure to follow the instructions in B-CAN System Diagnosis Test Mode A (see page 22-131).

1. Clear the DTCs with the HDS.
2. Turn the ignition switch to LOCK (0).
3. Make sure the brake pedal position switch is OFF.
4. Make sure the headlight switch is OFF.
5. Turn the ignition switch to ON (II).
6. Check for DTCs with the HDS.

   Is DTC B1079 indicated?

   YES—Go to step 7.

   NO—Intermittent failure, the system is OK at this time. Check for loose or poor connections. ■
7. Turn the headlight high beams ON.

   Do both headlights come on?

   YES—Go to step 8.

   NO—If one of the headlights doesn't come on, check the fuse and bulb, and for a poor ground (G201, G301) or an open in the wire. If both headlights don't come on, go to step 11.
8. Turn the headlight switch OFF.
9. Select LIGHTING SYSTEM from the HDS, and enter DATA LIST.
10. Check the ON/OFF information of the DRL Command in the DATA LIST.

    Is the information indicator ON?

    YES—Do the relay control module input test (see page 22-158). ■

    NO—Substitute a known-good daytime running light control unit and recheck the system. ■
11. Check the No. 3 (10 A) and No. 5 (10 A) fuses in the under-hood fuse/relay box.

    Are both fuses OK?

    YES—Go to step 12.

    NO—Replace the blown fuse, and recheck the system. ■
12. Check the headlight bulbs.

    Are both bulbs OK?

    YES—Go to step 13.

    NO—Replace the blown bulb, and recheck the system. ■

13. Disconnect the 2P connector from each headlight high beam.

14. Disconnect under-hood fuse/relay box connector H (14P).

15. Check for continuity between left headlight high beam 2P connector terminal No. 2 and under-hood fuse/relay box connector H (14P) terminal No. 8, and between right headlight high beam 2P connector terminal No. 2 and under-hood fuse/relay box connector H (14P) terminal No. 10.

UNDER-HOOD FUSE/RELAY BOX CONNECTOR H (14P)

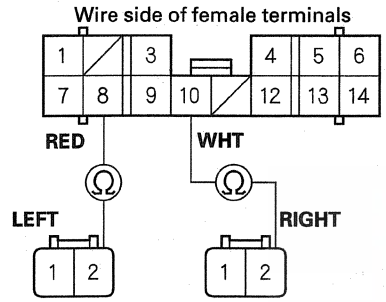

HEADLIGHT (HIGH BEAM) CONNECTORS (2P)
Wire side of female terminals

Is there continuity?

YES—Go to step 16.

NO—Repair an open in the wire. ■

16. Check for continuity between each headlight high beam 2P connector terminal No. 1 and body ground.

HEADLIGHT (HIGH BEAM) CONNECTORS (2P)

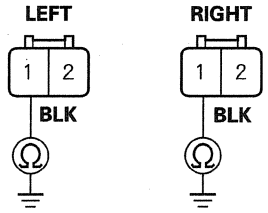

Wire side of female terminals

Is there continuity?

YES—Faulty relay control module; replace the under-hood fuse/relay box (see page 22-84). ■

NO—Repair an open in the wire or a poor ground (G201, G301). ■

DTC Troubleshooting (cont'd)

DTC B1255: Combination Switch Control Unit Lost Communication With MICU (MICU Message)

NOTE: If you are troubleshooting multiple DTCs, be sure to follow the instructions in B-CAN System Diagnosis Test Mode A (see page 22-131).

1. Clear the DTCs with the HDS.
2. Turn the ignition switch to LOCK (0) and then back to ON (II).
3. Wait for at least 6 seconds.
4. Check for DTCs with the HDS.

   Is DTC B1255 indicated?

   YES—Go to step 5.

   NO—Intermittent failure, the system is OK at this time. Check for loose or poor connections between the combination switch control unit and the MICU. ■
5. Check for DTCs with the HDS.

   Are DTC B1055, B1157, B1605, B1806, B2107, and B2155 also indicated?

   YES—Do the MICU input test (see page 22-152). ■

   NO—Do the combination switch control unit input test (see page 22-157). ■

DTC B1275: Headlight Switch OFF Position Circuit Malfunction

DTC B1276: Headlight Switch Parking (SMALL) Position Circuit Malfunction

DTC B1277: Headlight Switch AUTO Position Circuit Malfunction

DTC B1278: Headlight Switch ON Position Circuit Malfunction

NOTE: If you are troubleshooting multiple DTCs, be sure to follow the instructions in B-CAN System Diagnosis Test Mode A (see page 22-131).

1. Clear the DTCs with the HDS.
2. Turn the ignition switch to LOCK (0) and then back to ON (II).
3. Operate each combination light switch position for more than 2 seconds, then turn the combination light switch OFF.
4. Check for DTCs with the HDS.

   Is DTC B1275, B1276, B1277 and/or B1278 indicated?

   YES—Go to step 5.

   NO—Intermittent failure, the system is OK at this time. Check for loose or poor connections. ■
5. Turn the ignition switch to LOCK (0).
6. Disconnect the combination light switch 12P connector from the combination light switch.
7. Do the combination light switch test (see page 22-214) and check for open or short in the combination light switch terminals in each switch position.

   Is the combination light switch OK?

   YES—Faulty combination switch control unit, replace the wiper/washer switch. ■

   NO—Replace the combination light switch. ■

DTC B1279: Headlight Switch DIMMER Position Circuit Malfunction

NOTE: If you are troubleshooting multiple DTCs, be sure to follow the instructions in B-CAN System Diagnosis Test Mode A (see page 22-131).

1. Clear the DTCs with the HDS.
2. Turn the ignition switch to LOCK (0) and then back to ON (II).
3. Turn the headlight switch ON.
4. Change the DIMMER switch from low beam to high beam and wait for 2 seconds.
5. Pull and hold the combination light switch lever, and hold the passing switch position for more than 2 seconds.
6. Check for DTCs with the HDS.

   Is DTC B1279 indicated?

   YES—Go to step 7.

   NO—Intermittent failure, the headlight switch DIMMER circuit is OK at this time. Check for loose or poor connections. ■
7. Turn the ignition switch to LOCK (0).
8. Disconnect the combination light switch 12P connector from the combination light switch.
9. Do the combination light switch test (see page 22-214) and check for open or short in the combination light switch terminals in each switch position.

   Is the combination light switch OK?

   YES—Faulty combination switch control unit, replace the wiper/washer switch. ■

   NO—Replace the combination light switch. ■

DTC Troubleshooting (cont'd)

DTC B1575: Automatic Lighting Sensor Circuit Malfunction

NOTE: If you are troubleshooting multiple DTCs, be sure to follow the instructions in B-CAN System Diagnosis Test Mode A (see page 22-131).

1. Clear the DTCs with the HDS.
2. Turn the ignition switch to LOCK (0) and then back to ON (II).
3. Check for DTCs with the HDS.

   Is DTC B1575 indicated?

   YES—Go to step 4.

   NO—Intermittent failure, the system is OK at this time. Check for loose or poor connections. ■
4. Turn the ignition switch to LOCK (0).
5. Disconnect driver's under-dash fuse/relay box connector P (30P).
6. Disconnect the automatic lighting sensor 5P connector.
7. Check for continuity between driver's under-dash fuse/relay box connector P (30P) terminals No. 14, No. 27 and No. 30 and automatic lighting sensor 5P connector terminals No. 1, No. 3, and No. 5 respectively.

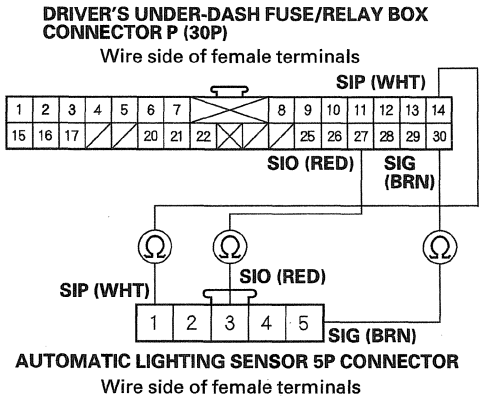

   Is there continuity?

   YES—Go to step 8.

   NO—Repair an open in the wire. ■
8. Check for continuity between automatic lighting sensor 5P connector terminals No. 1 and No. 3.

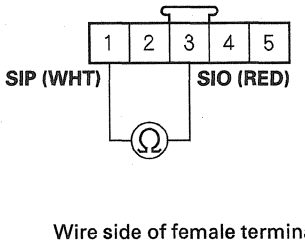

   Is there continuity?

   YES—Repair a short in the wire between terminals No. 1 and No. 3. ■

   NO—Go to step 9.

9. Disconnect driver's under-dash fuse/relay box connector E (16P).

10. Check for continuity between body ground and driver's under-dash fuse/relay box connector E (16P) terminal No. 9 and driver's under-dash fuse/relay box connector P (30P) terminal No. 1 individually.

DRIVER'S UNDER-DASH FUSE/RELAY BOX CONNECTOR E (16P)

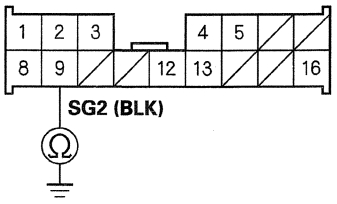

Wire side of female terminals

DRIVER'S UNDER-DASH FUSE/RELAY BOX CONNECTOR P (30P)

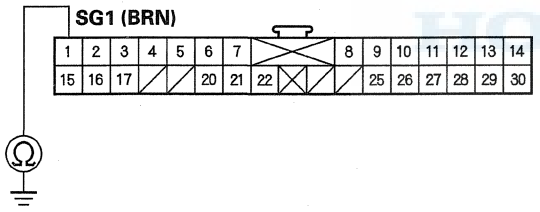

Wire side of female terminals

Is there continuity?

YES—Go to step 11.

NO—Repair an open in the wire or a poor ground (G502, G601). ■

11. Reconnect driver's under-dash fuse/relay box connector P (30P).

12. Turn the ignition switch to ON (II).

13. Measure the voltage between automatic lighting sensor 5P connector terminals No. 1 and No. 5.

AUTOMATIC LIGHTING SENSOR 5P CONNECTOR

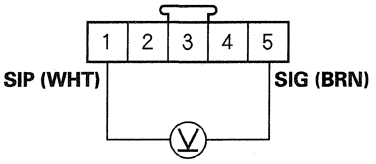

Wire side of female terminals

Is there about 5 V?

YES—Replace the automatic lighting sensor. ■

NO—Faulty MICU; replace the driver's under-dash fuse/relay box (see page 22-88). ■

Combination Light Switch Test/Replacement

1. Remove the driver's dashboard undercover (see page 20-100), and the driver's dashboard lower cover (see page 20-100).
2. Remove the steering column covers (see page 17-25).
3. Disconnect the combination light switch 12P connector (A) from the wiper/washer switch (B).

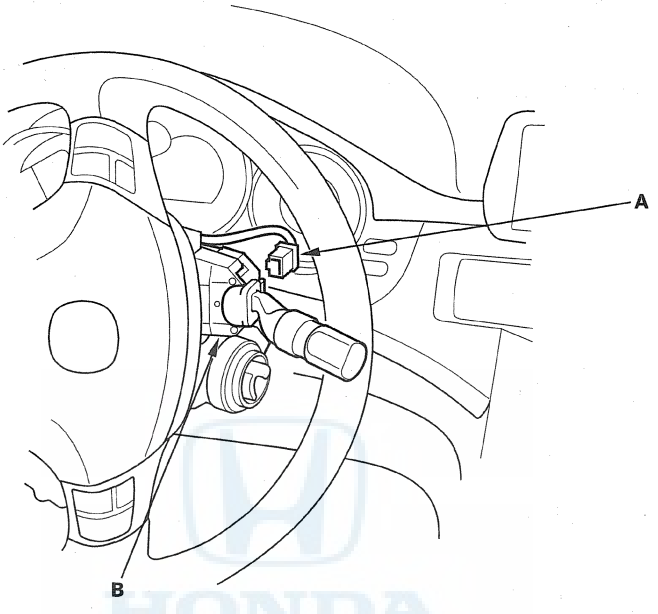

4. Remove the two screws, then slide out the combination light switch (A).

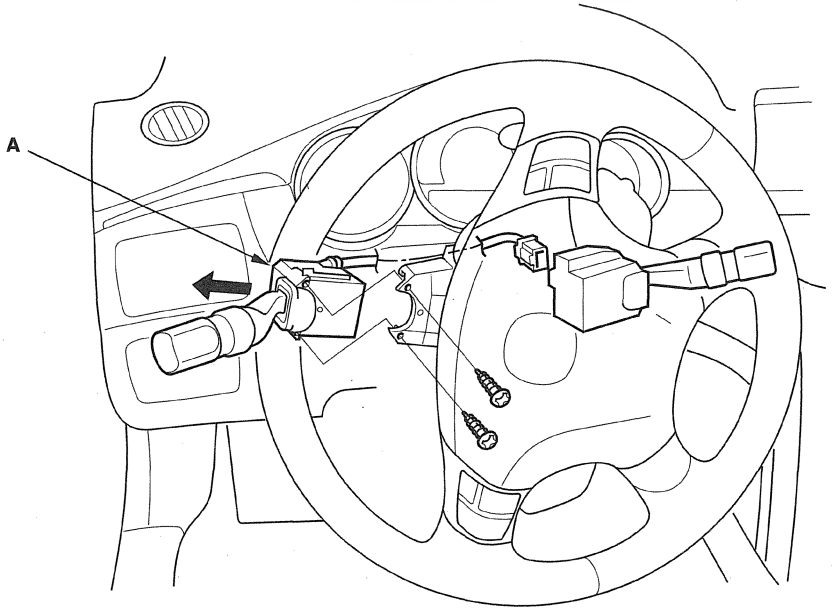

5. Inspect the connector terminals to be sure they are all making good contact.

   - If the terminals are bent, loose or corroded, repair them as necessary, and recheck the system.
   - If the terminals look OK, check for continuity between the terminals in each switch position according to the tables.

COMBINATION LIGHT SWITCH 12P CONNECTOR

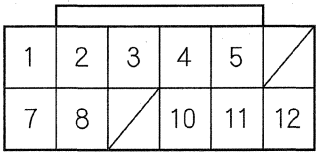

Wire side of female terminals

Light switch:

Position \ Terminal			1	2	3	8	7	12
Headlight switch	OFF		○					○
	≡D						○	○
	≡D	LOW		○			○	○
	≡D	HIGH		○			○	○
						○		○
Passing switch	OFF							
	ON				○			○

Turn signal switch:

Position \ Terminal	4	10	12
LEFT	○		○
Neutral			
RIGHT		○	○

Fog light switch:

Position \ Terminal	5	12
OFF		
ON	○	○

6. If the continuity is not as specified, replace the combination light switch.

Daytime Running Lights Control Unit Input Test/Replacement

USA models

NOTE: Make sure the headlights high beam come on normally with the combination light switch ON.

1. Remove the driver's dashboard undercover (see page 20-100), and the driver's dashboard lower cover (see page 20-100).
2. Disconnect the 14P connector (A) from the daytime running lights control unit (B).

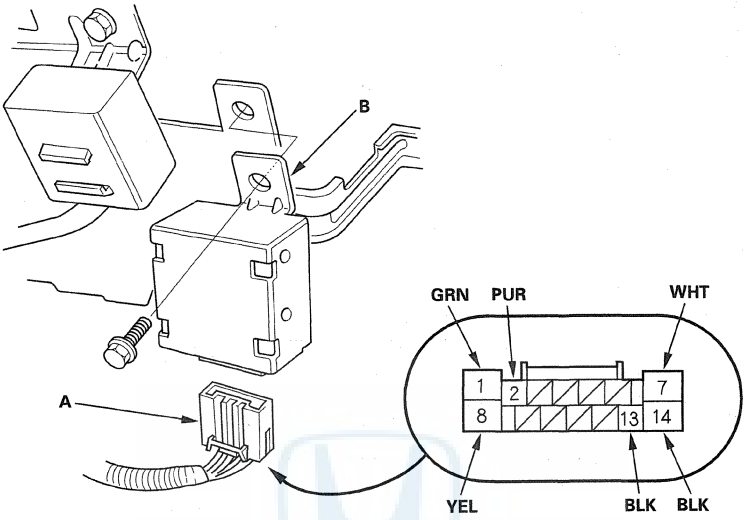

Wire side of female terminals

3. Inspect the connector and socket terminals to be sure they are all making good contact.
   - If the terminals are bent, loose or corroded, repair them as necessary and recheck the system.
   - If the terminals look OK, go to step 4.
4. Reconnect the connector to the daytime running lights control unit, and do these input tests at the following connectors.
   - If any test indicates a problem, find and correct the cause, then recheck the system.
   - If all the input tests prove OK, go to step 5.

Cavity	Wire	Test condition	Test: Desired result	Possible cause if desired result is not obtained
13 14	BLK	Under all conditions	Measure the voltage to ground: There should be less than 0.2 V.	• Poor ground (G401) • An open in the wire
8	YEL	Ignition switch ON (II)	Measure the voltage to ground: There should be battery voltage.	• Blown No. 21 (10 A) fuse in the driver's under-dash fuse/relay box • An open in the wire
1	GRN	Under all conditions	Measure the voltage to ground: There should be battery voltage.	• Blown No. 19 (40 A) fuse in the under-hood fuse/relay box • Blown No. 3 (10 A) fuse in the driver's under-dash fuse/relay box • An open in the wire

5. Disconnect the 14P connector from the daytime running lights control unit, and do these input tests at the following connectors.
   - If any test indicates a problem, find and correct the cause, then recheck the system.
   - If all input tests prove OK, the control unit must be faulty; replace it.

Cavity	Wire	Test condition	Test: Desired result	Possible cause if desired result is not obtained
2	PUR	Under all conditions	Check for continuity between terminal No. 2 and under-hood fuse/relay box connector H (14P) terminal No. 3: There should be continuity.	An open in the wire
7	WHT	Under all conditions	Check for continuity between terminal No. 7 and under-hood fuse/relay box connector H (14P) terminal No. 9: There should be continuity.	A open in the wire

HID Lamp System Troubleshooting

⚠WARNING

A transient high tension (25,000 V) occurs at the bulb sockets or the high intensity discharge (HID) lamps when the combination light switch is turned ON, it may cause serious electrical shock or electrocution if you do not observe the cautions.

⚠CAUTION

- Never turn on the combination light switch before fitting the HID bulbs to their bulb sockets and completing the reassembly of the headlight assembly.
- Do not service the headlights assembly in wet conditions, such as rain or snow, near a sprinkler system, or when your hands are wet to prevent electrocution.
- Do not touch the surface of the HID bulbs with your bare hands and do not stain then with any oils and fats.
- Do not disassemble the inverter unit and the igniter unit.
- Do not turn on the HID bulb by using a power source other than the battery mounted on the vehicle.

Special Tools Required
HID bulb test light assembly 07AAJ-S3MA100

1. Check the No. 1 (15 A) and No. 6 (15 A) fuses in the under-hood fuse/relay box.

   Are the fuses OK?

   YES—Go to step 2.

   NO—Replace the fuse(s), and recheck. ■

2. Turn the combination light switch to OFF.
3. Do the battery terminal disconnection procedure (see page 22-91).
4. Remove the bulb socket from the HID bulb (see page 22-221).
5. Check for corrosion and traces of electrical arcing on the contacts of the socket (A).

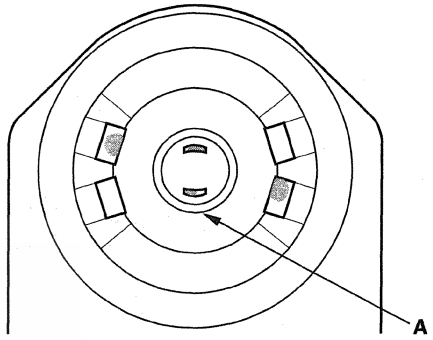

   Is the socket corroded or burnt?

   YES—Replace the socket, and recheck. ■

   NO—Go to step 6.

6. Connect the HID bulb test light assembly (A) to the bulb socket (B).

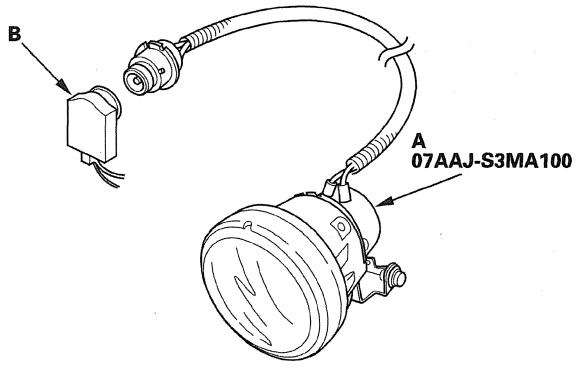

7. Do the battery terminal reconnection procedure (see page 22-91).

(cont'd)

HID Lamp System Troubleshooting (cont'd)

8. Turn the combination light (headlight) switch to ON.

   Does the HID test light bulb come on?

   YES—Replace the original HID bulb (see page 22-221). ■

   NO—Go to step 9.

9. Measure the voltage between HID unit 2P connector terminal No. 2 and body ground.

HID UNIT 2P CONNECTOR

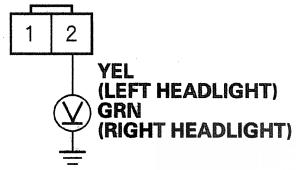

Wire side of female terminals

   Is there battery voltage?

   YES—Go to step 10.

   NO—Repair open in the RED or BRN wire. ■

10. Turn the combination light (headlight) switch to OFF.

11. Do the battery terminal disconnection procedure (see page 22-91).

12. Remove the HID bulb test light assembly from the bulb socket.

13. Disconnect the HID unit 2P connector.

14. Do the battery terminal reconnection procedure (see page 22-91).

15. Check for continuity between HID unit 2P connector terminal No. 1 and body ground.

HID UNIT 2P CONNECTOR

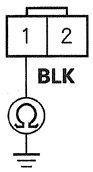

Wire side of female terminals

   Is there continuity?

   YES—Replace the HID unit. ■

   NO—Repair open in the wire between the HID unit and body ground. If the wire is OK, check for poor ground (G201, G301). ■

   NOTE: Do the battery terminal reconnection procedure (see page 22-91). Do steering column position memorization (see page 17-32), and enter the anti-theft codes for the audio system and the navigation system (if equipped), and set the clock (without navigation).

Headlight Adjustment

⚠CAUTION

Headlights become very hot during use; do not touch them or any attaching hardware immediately after they have been turned off.

Before adjusting the headlights:
- Park the vehicle on a level surface.
- Make sure the tire pressures are correct.
- Have the driver or someone who weighs the same sit in the driver's seat.
- Unload the vehicle.

1. Clean the outer lens so that you can see the center (A) of the headlights.

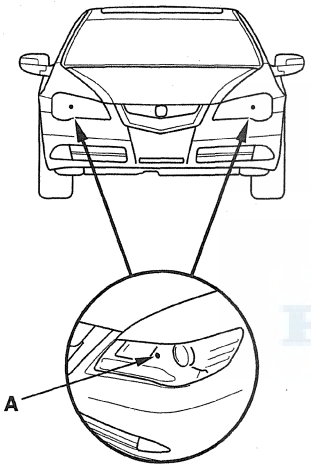

2. Park the vehicle 25 ft (7.5 m) away from a wall or a screen (A).

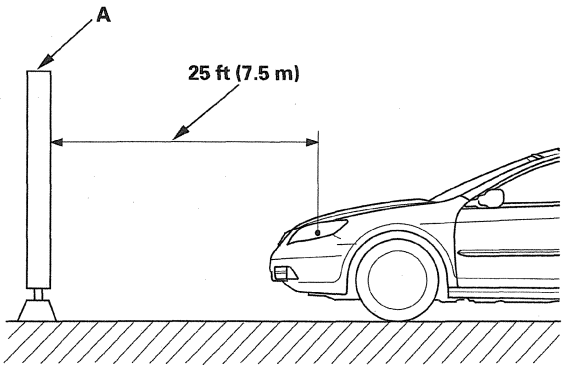

3. Turn the low beams on.

4. Determine if the headlights are aimed properly.

   Vertical adjustment:
   Measure the height of the headlights (A).
   Adjust the upper edge of the cut line (B) to the headlights height (A).

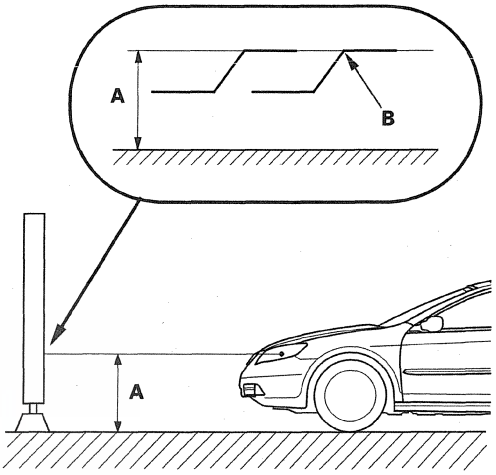

5. If necessary, open the hood and adjust the headlights by turning the vertical adjuster.

   NOTE: The R and L adjusters are not applicable for USA models.

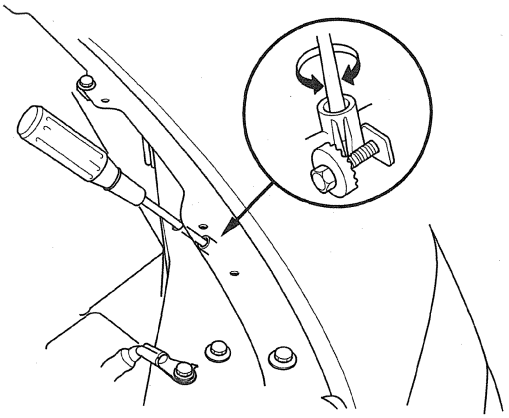

Headlight Replacement

1. Remove the parts shown:
   - Battery trim (see page 20-162)
   - Upper grille cover (see page 20-163)
   - Upper fender trim (see page 20-162)
   - Front bumper (see page 20-149)

2. Remove the four bolts and the corner upper beam (A).

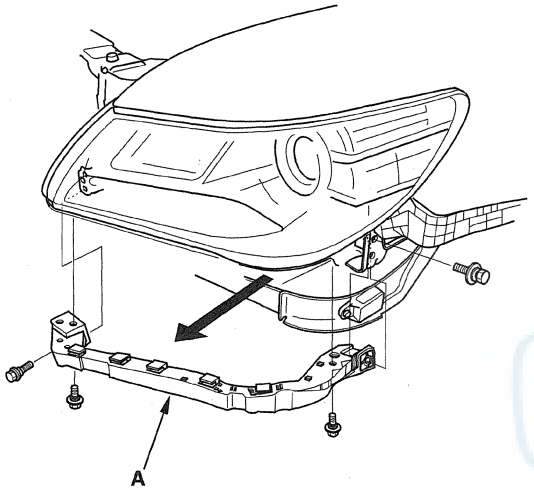

3. Disconnect the connectors (A) from the headlight.

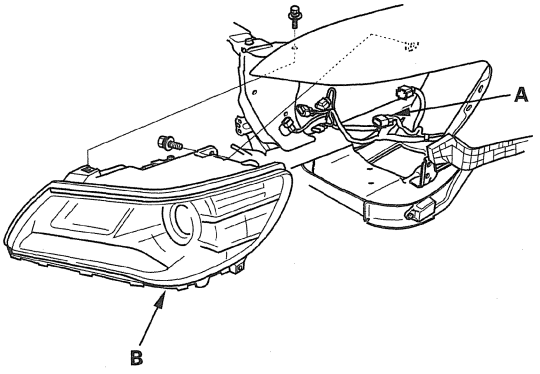

4. Remove the two bolts and the headlight (B).

   NOTE: Be careful not to scratch or bend the fender.

5. Install the parts in the reverse order of removal.

Bulb Replacement

Headlight Bulb (Low Beam)

⚠ WARNING

A transient high tension (25,000 V) occurs at the bulb sockets of the high intensity discharge (HID) lamps when the combination light switch is turned ON, it may cause serious electrical shock or electrocution if you do not observe the cautions below.

⚠ CAUTION

- Never turn on the combination light switch before fitting the HID bulbs to their bulb sockets and completing the reassembly of the headlight assembly.
- Do not service the headlights assembly in wet conditions, such as rain or snow, near a sprinkler system, or when your hands are wet to prevent electrocution.
- Do not touch the surface of the HID bulbs with your bare hands and do not stain them with any oils and fats.
- Do not disassemble the inverter unit and the igniter unit.
- Do not turn on the HID bulb by using a power source other than the battery mounted on the vehicle.

1. Turn the combination light switch OFF.
2. Do the battery terminal disconnection procedure (see page 22-91).
3. Remove the headlight assembly (see page 22-220).
4. Turn the cover (A) 45 °counterclockwise to remove it from the headlight assembly.

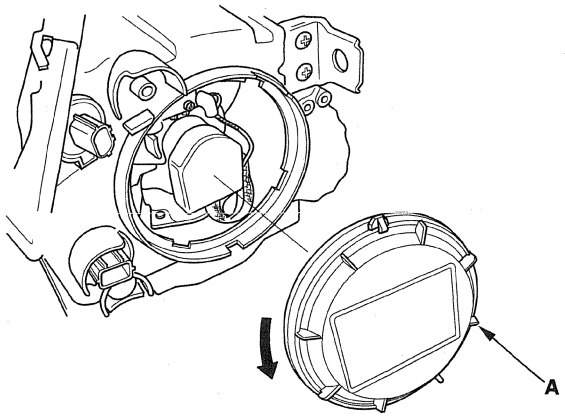

5. Turn the socket (A) 45 °counterclockwise to remove it from the bulb (B).

Headlight: 35 W

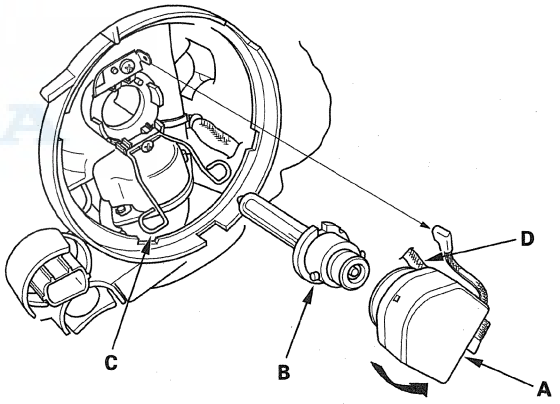

6. Pull the retaining spring (C) away from the bulb, then remove the bulb.
7. Make sure the bulb harness (D) is routed correctly so it does not contact the reflector.
8. Install the new bulb in the reverse order of removal. Make sure the notches in the bulb align with the tabs in the headlight.
9. Do the battery terminal reconnection procedure (see page 22-91).

(cont'd)

Bulb Replacement (cont'd)

Headlight Bulb (High Beam)

1. Remove the parts shown:
   - Battery trim (see page 20-162)
   - Upper grille cover (see page 20-163)
   - Right upper fender trim (see page 20-162)
2. For the left headlight, remove the battery hold-down by removing the two nuts, then slide the battery to access the bulb.
3. Disconnect the 2P connector (A) from the headlight bulb socket (B).

   Headlight Bulb: 60 W

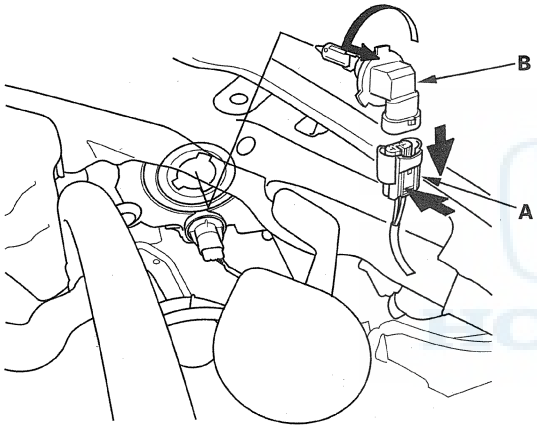

4. Turn the bulb socket 45 ° counterclockwise to remove it from the headlight housing.
5. Install a new bulb in the reverse order of removal. Make sure the notches in the bulb align with the tabs in the headlight.

   NOTE: Do not touch the glass of the bulb with your hands. If necessary, clean the glass area with alcohol.

Front Parking Light/Front Side Marker Light Bulb

1. Remove the parts shown:
   - Battery trim (see page 20-162)
   - Upper grille cover (see page 20-163)
   - Right upper fender trim (see page 20-162)
2. For the left light, remove the battery hold-down by removing the two nuts, then slide the battery to access the bulb.
3. For the right parking light/front side marker light, remove the clip from the windshield washer reservoir.
4. Disconnect the 2P connector (A) from the front parking light/front side marker light bulb socket (B).

   Front Parking Light/
   Front Side Marker Light Bulb: 1.5 CP

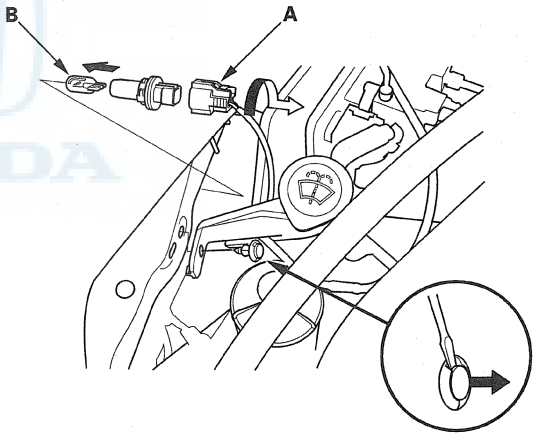

5. Turn the bulb socket 45 ° counterclockwise to remove it from the headlight housing.
6. Install a new bulb in the reverse order of removal.

Front Turn Signal Light Bulb

1. Remove the parts shown:
   - Battery trim (see page 20-162)
   - Upper grille cover (see page 20-163)
   - Right upper fender trim (see page 20-162)
2. For the left light, remove the battery hold-down by removing the two nuts, then slide the battery to access the bulb.
3. Disconnect the 3P connector (A) from the bulb socket (B).

Front Turn Signal Light Bulb: 24/2.2 CP (Amber)

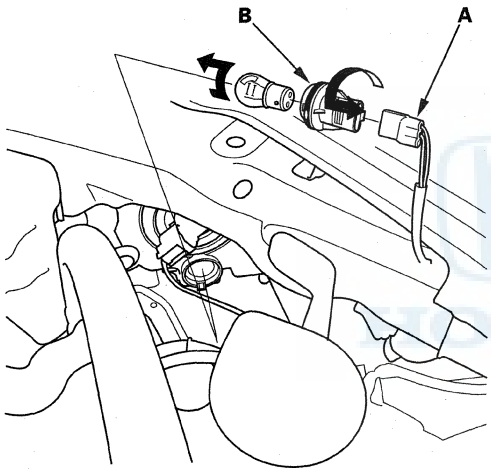

4. Turn the bulb socket 45 ° counterclockwise to remove it from the headlight housing.
5. Install a new bulb in the reverse order of removal.

HID Unit Replacement

1. Turn the combination light switch OFF.
2. Do the battery terminal disconnection procedure (see page 22-91).
3. Remove the headlight assembly (see page 22-220).
4. Remove the bulb socket from the HID bulb (see page 22-221).
5. Remove the three mounting screws and the HID unit (A).

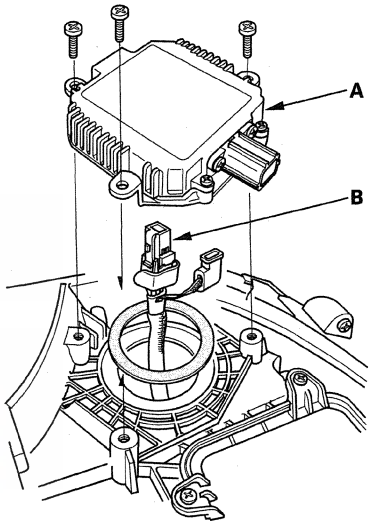

6. Disconnect the 4P connector (B) from the HID unit.
7. Inspect the gasket for damage. If damaged, replace it.
8. Install the parts in the reverse order of removal.
9. Do the battery terminal reconnection procedure (see page 22-91).

Fog Light Replacement

Bulb Replacement

1. Remove the bolts and clip, then push up the splash shield.

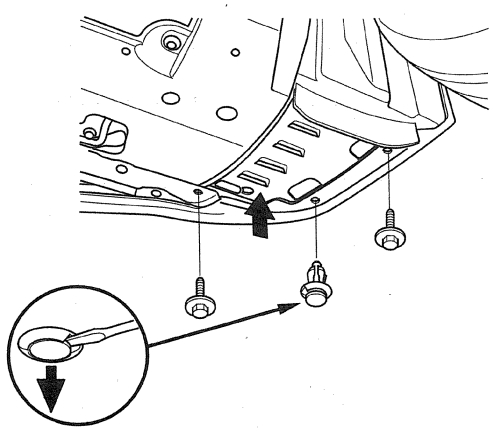

2. Disconnect the 2P connector (A) from the fog light (B).

Fog Light: 35 W

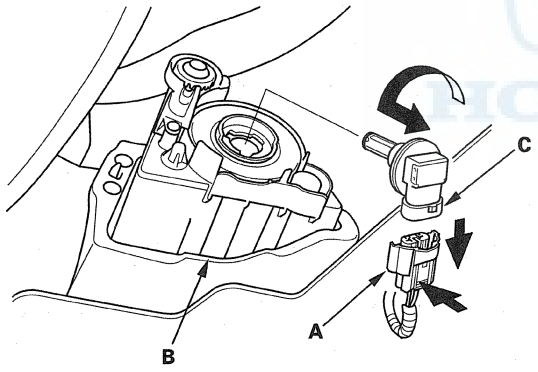

3. Turn the bulb socket (C) 45 °counterclockwise to remove it from the housing.

4. Install a new bulb in the reverse order of removal.

Replacement

1. Remove the front bumper (see page 20-149).

2. Remove the front bumper duct trim (see page 20-152).

3. Remove the screws, then remove the fog light (A).

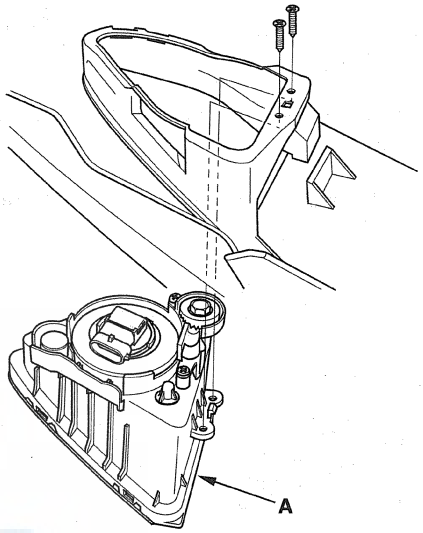

4. Install the parts in the reverse order of removal.

5. After replacement, adjust the fog lights at the adjuster (A) to local requirements.

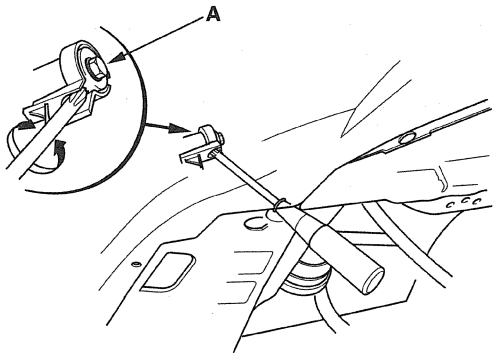

Taillight Replacement

1. Open the trunk lid, and remove the taillight lid (A).

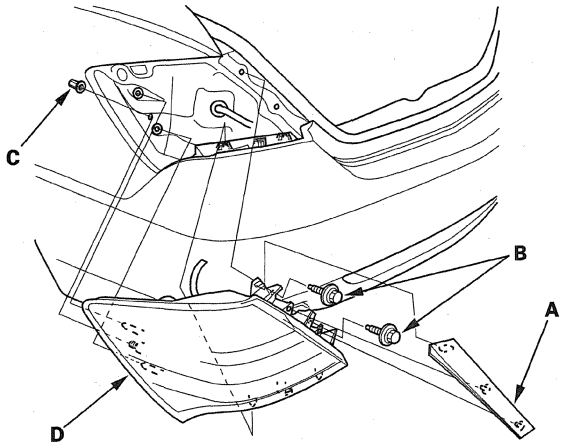

2. Remove the two bolts (B) from the taillight.
3. Remove the maintenance lid and special nut (C) from the taillight (D).
4. Pull out the taillight slightly, and turn the socket (A) 45 °counterclockwise to disconnect the 3P connector.

Brake Light/Taillight: LED
Rear Turn Signal Light: 21 W (Amber)

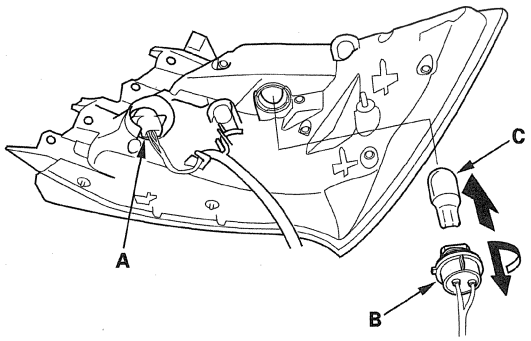

5. Turn the bulb sockets (B) 45 °counterclockwise to remove the bulbs (C).
6. Install the parts in the reverse order of removal.

License Plate Light Replacement

1. Slide the license plate light (A) to the right, and remove the license plate light.

License Plate Light: 5 W

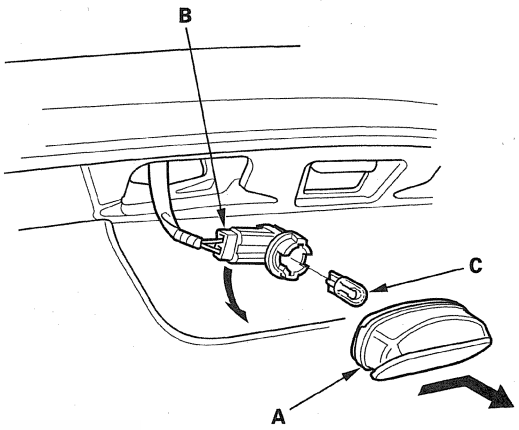

2. Disconnect the 2P connector (B) from the license plate light.
3. Turn the bulb socket 45 °clockwise to remove the bulb (C).

Back-up Light Replacement

Bulb Replacement

1. Open the trunk lid, and remove the maintenance lid.
2. Disconnect the 2P connector (A) from the back-up light bulb socket (B).

Back-up Light: 21 W

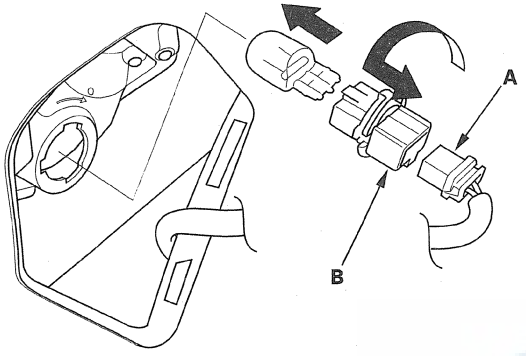

3. Turn the bulb socket 45 ° counterclockwise to remove it from the back-up light housing.
4. Install a new bulb in the reverse order of removal.

Replacement

1. Open the trunk lid, and remove the trunk lid trim (see page 20-85).
2. Disconnect the 2P connector (A).

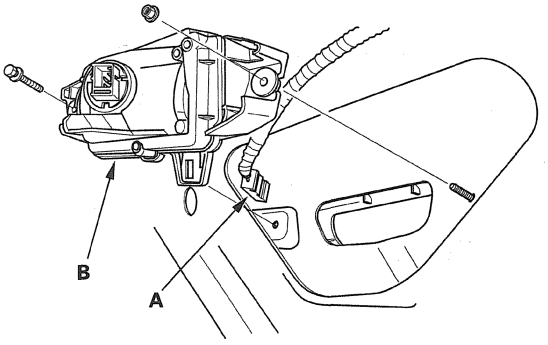

3. Remove the bolt and nut, then remove the back-up light (B).
4. Install the parts in the reverse order of removal.

High Mount Brake Light Replacement

1. Remove the high mount brake light cover (A).

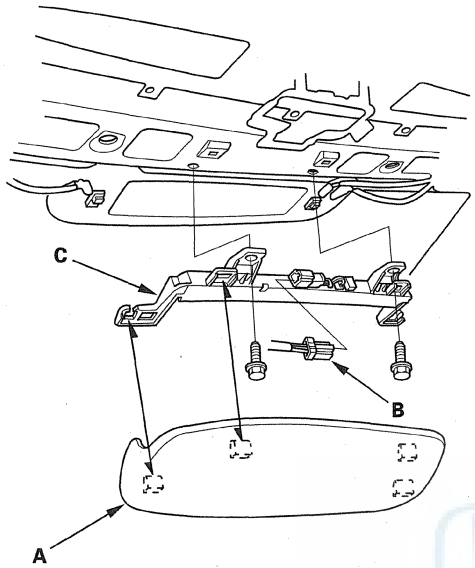

2. Disconnect the 2P connector (B) from the high mount brake light (C).
3. Remove the two bolts and the high mount brake light.
4. Install the light in the reverse order of removal.
5. Clean the rear window, and install the high mount brake light cover in the reverse order of removal.

Brake Pedal Position Switch Test

1. Disconnect the 4P connector (A) from the brake pedal position switch (B).

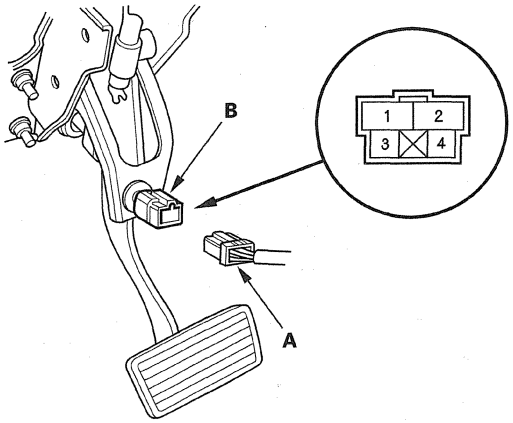

2. Check for continuity between terminals No. 1 and No. 2.
   - There should be continuity when the brake pedal is pressed.
   - There should be no continuity when the brake pedal is released.
3. Check for continuity between terminals No. 3 and No. 4.
   - There should be no continuity when the brake pedal is pressed.
   - There should be continuity when the brake pedal is released.
4. If necessary, adjust or replace the switch, or adjust the pedal height (see page 19-6).

Component Location Index

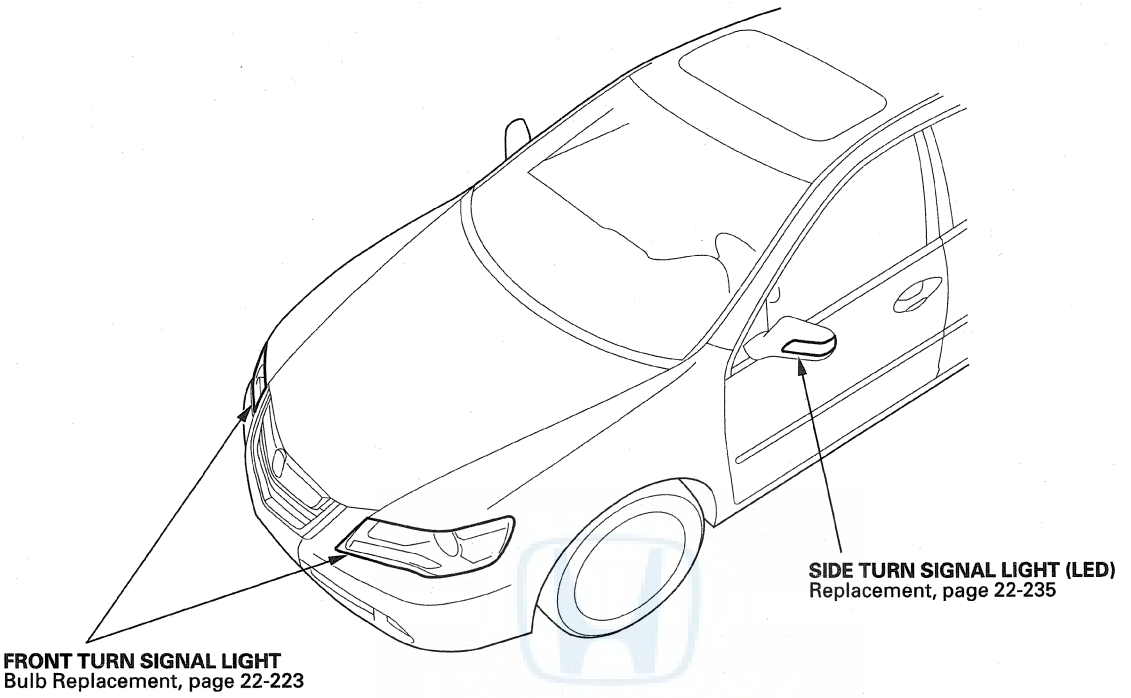

SIDE TURN SIGNAL LIGHT (LED)
Replacement, page 22-235

FRONT TURN SIGNAL LIGHT
Bulb Replacement, page 22-223

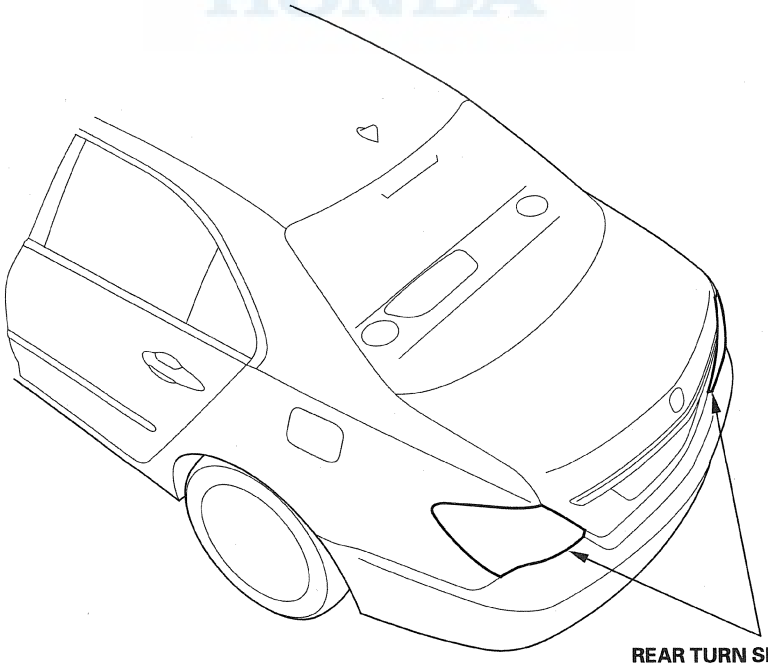

REAR TURN SIGNAL LIGHT
Replacement, page 22-225

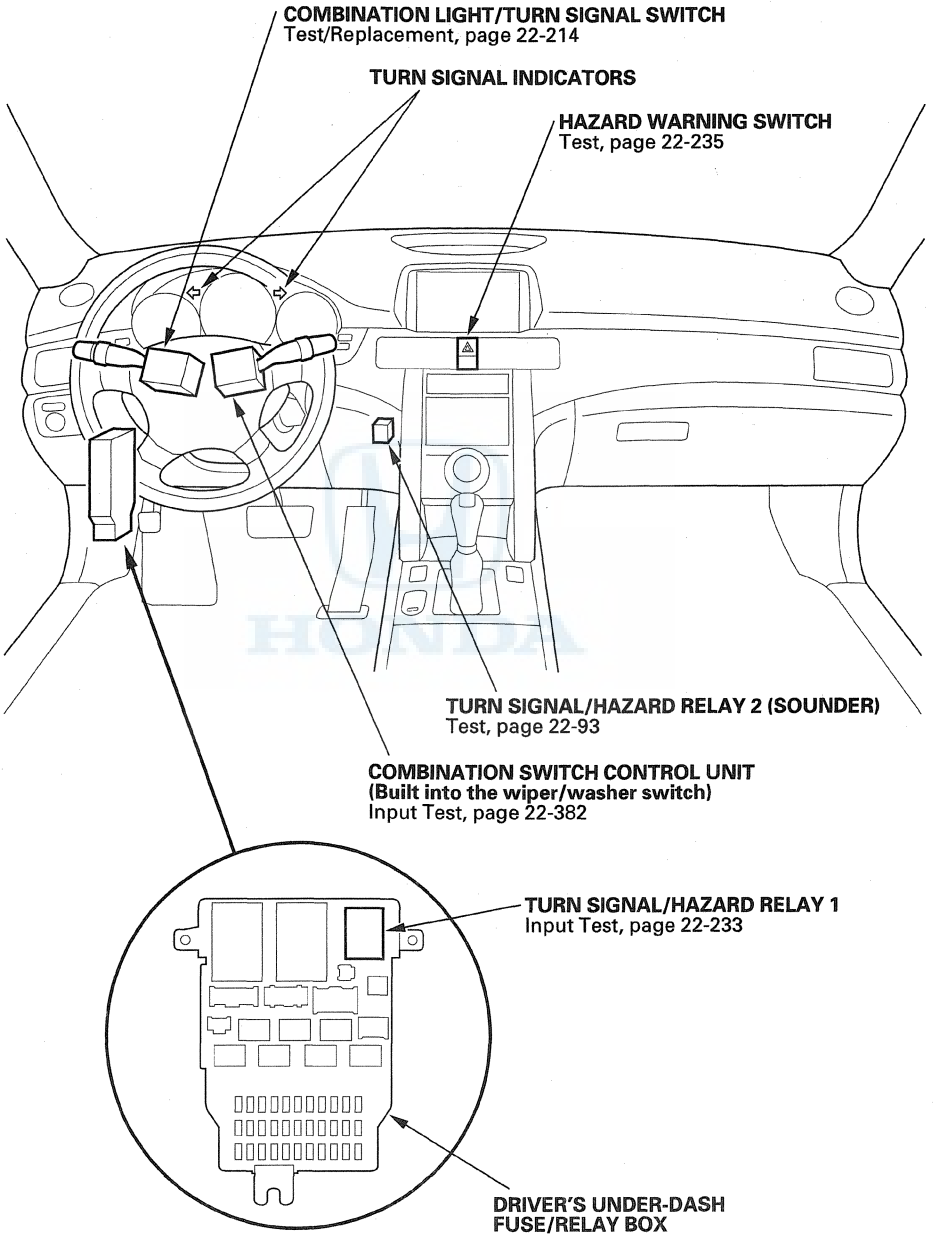
COMBINATION LIGHT/TURN SIGNAL SWITCH
Test/Replacement, page 22-214
TURN SIGNAL INDICATORS
HAZARD WARNING SWITCH
Test, page 22-235
TURN SIGNAL/HAZARD RELAY 2 (SOUNDER)
Test, page 22-93
COMBINATION SWITCH CONTROL UNIT
(Built into the wiper/washer switch)
Input Test, page 22-382
TURN SIGNAL/HAZARD RELAY 1
Input Test, page 22-233
DRIVER'S UNDER-DASH
FUSE/RELAY BOX

Turn Signal/Hazard Warning Lights

Circuit Diagram

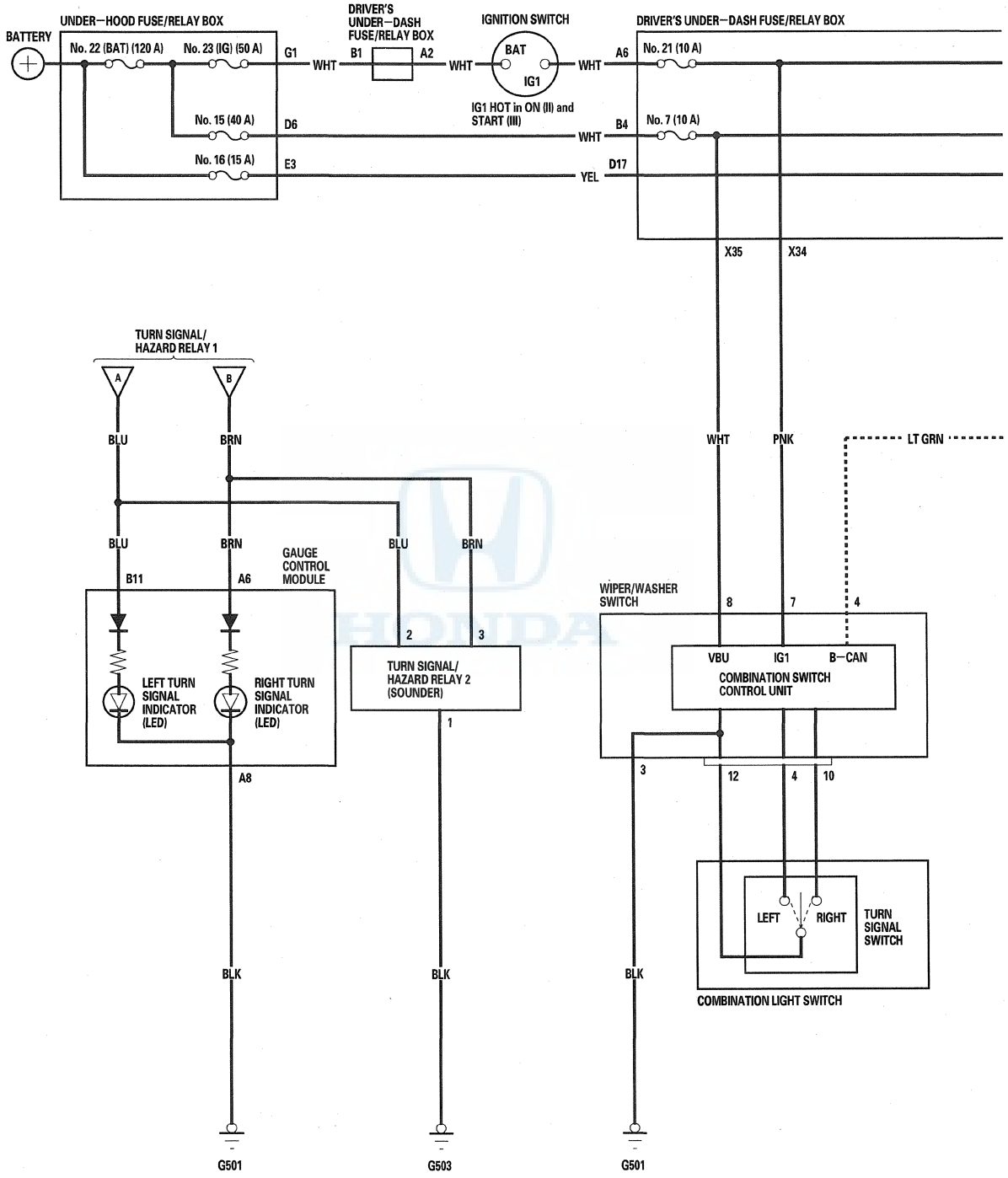

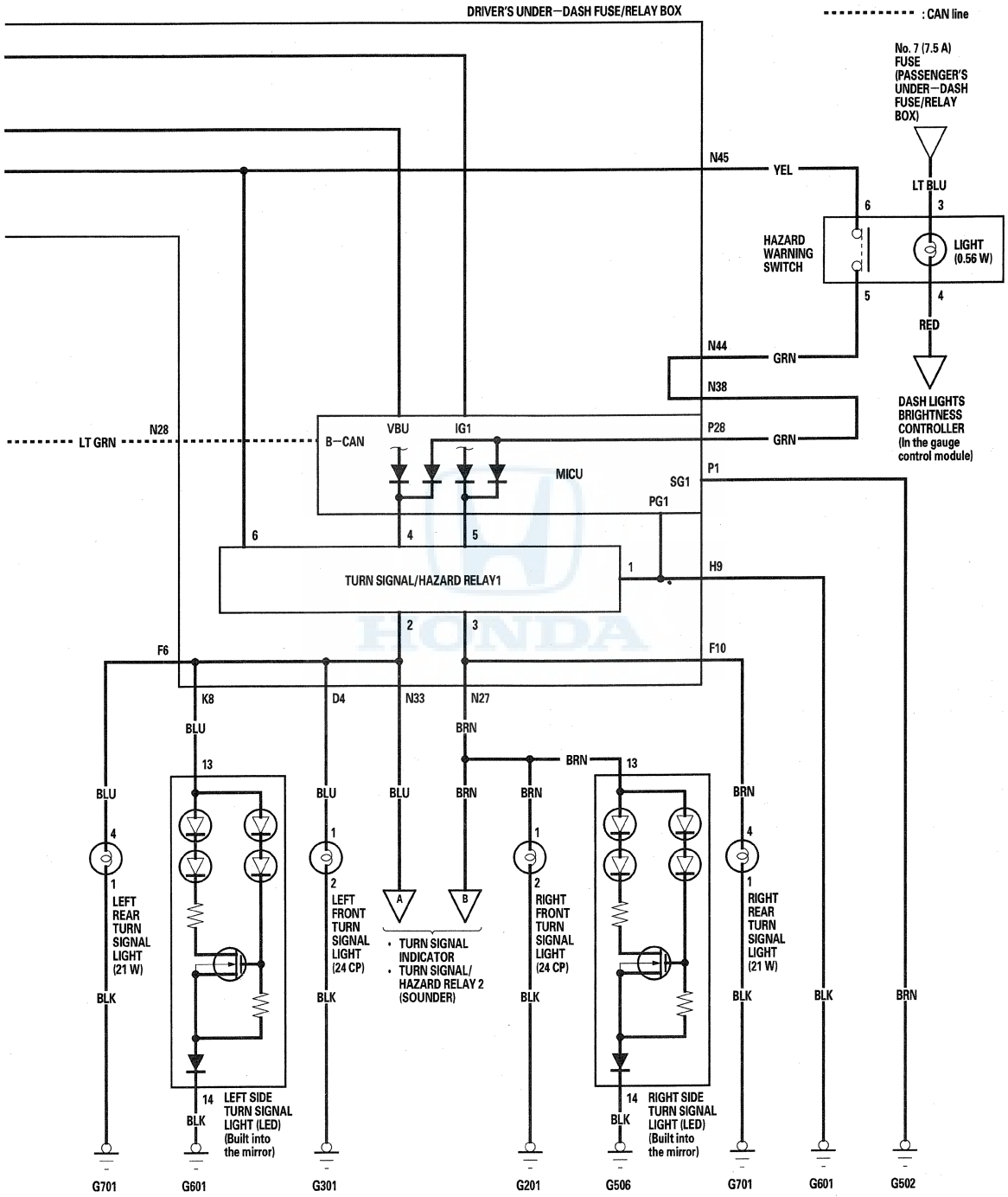
DRIVER'S UNDER—DASH FUSE/RELAY BOX
: CAN line
No. 7 (7.5 A) FUSE (PASSENGER'S UNDER—DASH FUSE/RELAY BOX)
N45
YEL
LT BLU
6
3
HAZARD WARNING SWITCH
LIGHT (0.56 W)
5
4
RED
N44
GRN
N38
DASH LIGHTS BRIGHTNESS CONTROLLER (In the gauge control module)
N28
LT GRN
B—CAN
VBU
IG1
P28
GRN
MICU
SG1
P1
PG1
6
4
5
TURN SIGNAL/HAZARD RELAY1
1
H9
2
3
F6
F10
K8
D4
N33
N27
BLU
BRN
BRN
13
13
BLU
BLU
BLU
BRN
BRN
BRN
4
1
2
1
A
B
1
2
4
1
LEFT REAR TURN SIGNAL LIGHT (21 W)
LEFT FRONT TURN SIGNAL LIGHT (24 CP)
• TURN SIGNAL INDICATOR
• TURN SIGNAL/ HAZARD RELAY 2 (SOUNDER)
RIGHT FRONT TURN SIGNAL LIGHT (24 CP)
RIGHT REAR TURN SIGNAL LIGHT (21 W)
BLK
BLK
BLK
BLK
BLK
BLK
BRN
14
14
BLK
BLK
LEFT SIDE TURN SIGNAL LIGHT (LED) (Built into the mirror)
RIGHT SIDE TURN SIGNAL LIGHT (LED) (Built into the mirror)
G701
G601
G301
G201
G506
G701
G601
G502

DTC Troubleshooting

DTC B1280: Turn Signal Switch Circuit Malfunction

NOTE: If you are troubleshooting multiple DTCs, be sure to follow the instructions in B-CAN System Diagnosis Test Mode A (see page 22-131).

1. Clear the DTCs with the HDS.
2. Turn the ignition switch to LOCK (0) and then back to ON (II).
3. Turn the turn signal switch to left position and wait for 2 seconds, then turn to right position and wait for 2 seconds.
4. Check for DTCs with the HDS.

   Is DTC B1280 indicated?

   YES—Go to step 5.

   NO—Intermittent failure, the turn signal switch circuit is OK at this time. Check for loose or poor connections. ■
5. Turn the ignition switch to LOCK (0).
6. Disconnect the combination light switch 12P connector from the combination light switch.
7. Do the combination light switch test (see page 22-214) and check for open or short in the turn signal switch terminals in each switch position.

   Is the turn signal switch OK?

   YES—Faulty combination switch control unit, replace the wiper/washer switch. ■

   NO—Replace the combination light switch. ■

Turn Signal/Hazard Relay 1 Input Test

1. Remove the driver's dashboard undercover (see page 20-100), and the driver's dashboard lower cover (see page 20-100).

2. Remove the turn signal/hazard relay 1 (A) from the driver's under-dash fuse/relay box (B).

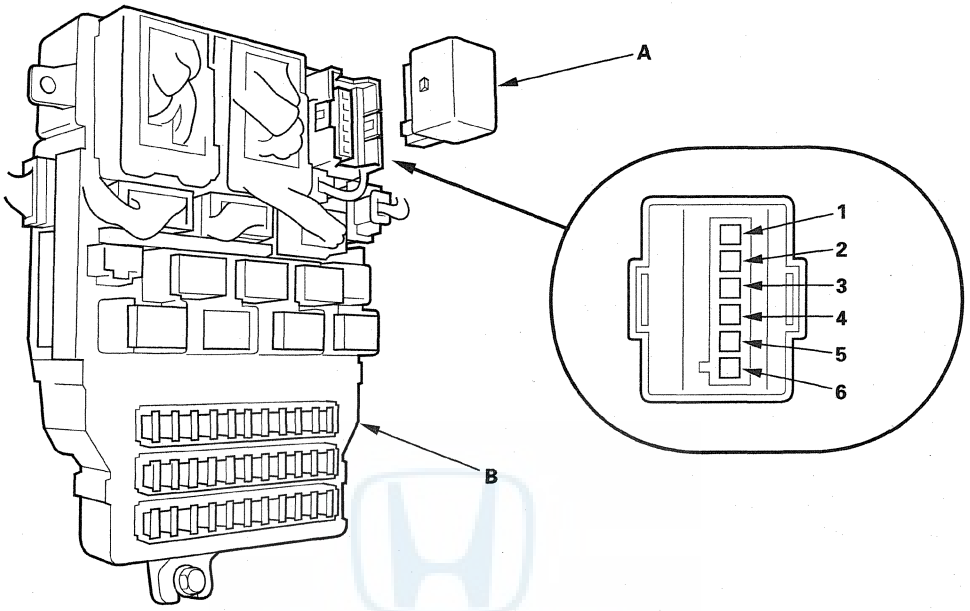

3. Inspect the relay and fuse/relay box socket terminals to be sure they are all making good contact.

   - If the terminals are bent, loose, or corroded, repair them as necessary, and recheck the system.
   - If the terminals look OK, go to step 3.

(cont'd)

Turn Signal/Hazard Relay 1 Input Test (cont'd)

4. Do these input tests at the fuse/relay box.

   - If any test indicates a problem, find and correct the cause, then recheck the system.
   - If all the input tests prove OK, the turn signal/hazard relay 1 must be faulty; replace it.

Cavity	Test condition	Test: Desired result	Possible cause if desired result is not obtained
6	Under all conditions	Measure the voltage to ground: There should be battery voltage.	• Blown No. 16 (15 A) fuse in the under-hood fuse/relay box • Faulty driver's under-dash fuse/relay box • An open in the wire
1	Under all conditions	Check for continuity to ground: There should be continuity.	• Poor ground (G601) • Faulty driver's under-dash fuse/relay box • An open in the wire
2	Connect terminal No. 6 to terminal No. 2 with a jumper wire.	Check the turn signal lights operation. The left turn signal lights and indicator should come on.	• Blown bulb • Poor ground (G301, G601, G701) • Faulty LED • An open in the wire
3	Connect terminal No. 6 to terminal No. 3 with a jumper wire.	Check the turn signal lights operation. The right turn signal lights and indicator should come on.	• Blown bulb • Poor ground (G201, G506, G701) • Faulty LED • An open in the wire
4	Ignition switch ON (II) and turn signal switch in Left position.	Measure the voltage to ground: There should be at least 10 V.	• Poor ground (G601) • Faulty turn signal switch • Faulty driver's under-dash fuse/relay box • An open in the wire • Faulty combination switch control unit* • Faulty MICU*
5	Ignition switch ON (II) and turn signal switch in Right position.	Measure the voltage to ground: There should be at least 10 V.	
4	Hazard warning switch ON	Measure the voltage to ground: There should be at least 10 V.	• Poor ground (G601) • Blown No. 16 (15 A) fuse in the under-hood fuse/relay box • Faulty driver's under-dash fuse/relay box • Faulty hazard warning switch • An open in the wire • Faulty MICU*
5		Measure the voltage to ground: There should be at least 10 V.	

*: Go to the B-CAN System Diagnosis Test Mode A (see page 22-131).

Hazard Warning Switch Test/ Replacement

1. Remove the passenger's vent panel (see page 20-101).
2. Push out the hazard warning switch (A) from behind the vent panel.

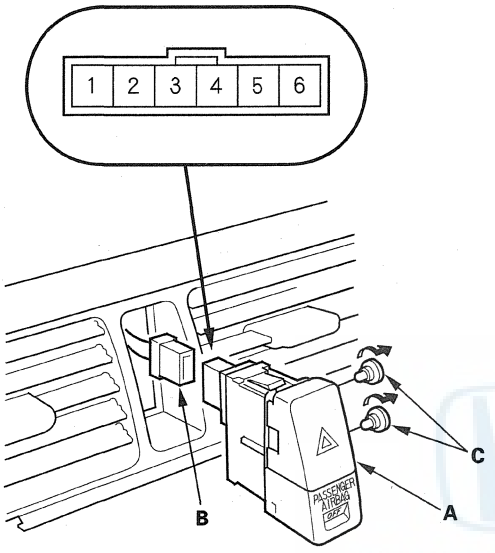

3. Disconnect the 6P connector (B) from the hazard warning switch.
4. Remove the two mounting screws, then remove the hazard warning switch from behind the upper panel.
5. Check for continuity between the terminals in each switch position according to the table.

Terminal / Position	5	6	3		4
OFF					
ON					

6. If the continuity is not as specified, replace the bulb(s) (C) or the hazard warning switch.

   NOTE: Both illumination bulbs are connected in parallel. If there is continuity, remove one illumination bulb at a time and recheck.

Side Turn Signal Light Replacement

1. Remove the mirror holder (see page 20-38).
2. Remove the screw, then pull out the side turn signal light (A).

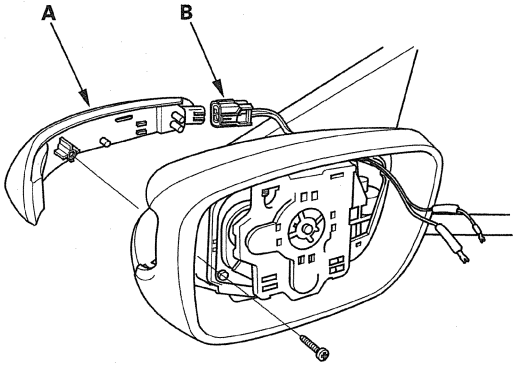

3. Disconnect the 2P connector (B) from the light.
4. Install the parts in the reverse order of removal.

Dash Lights Brightness Controller

Circuit Diagram

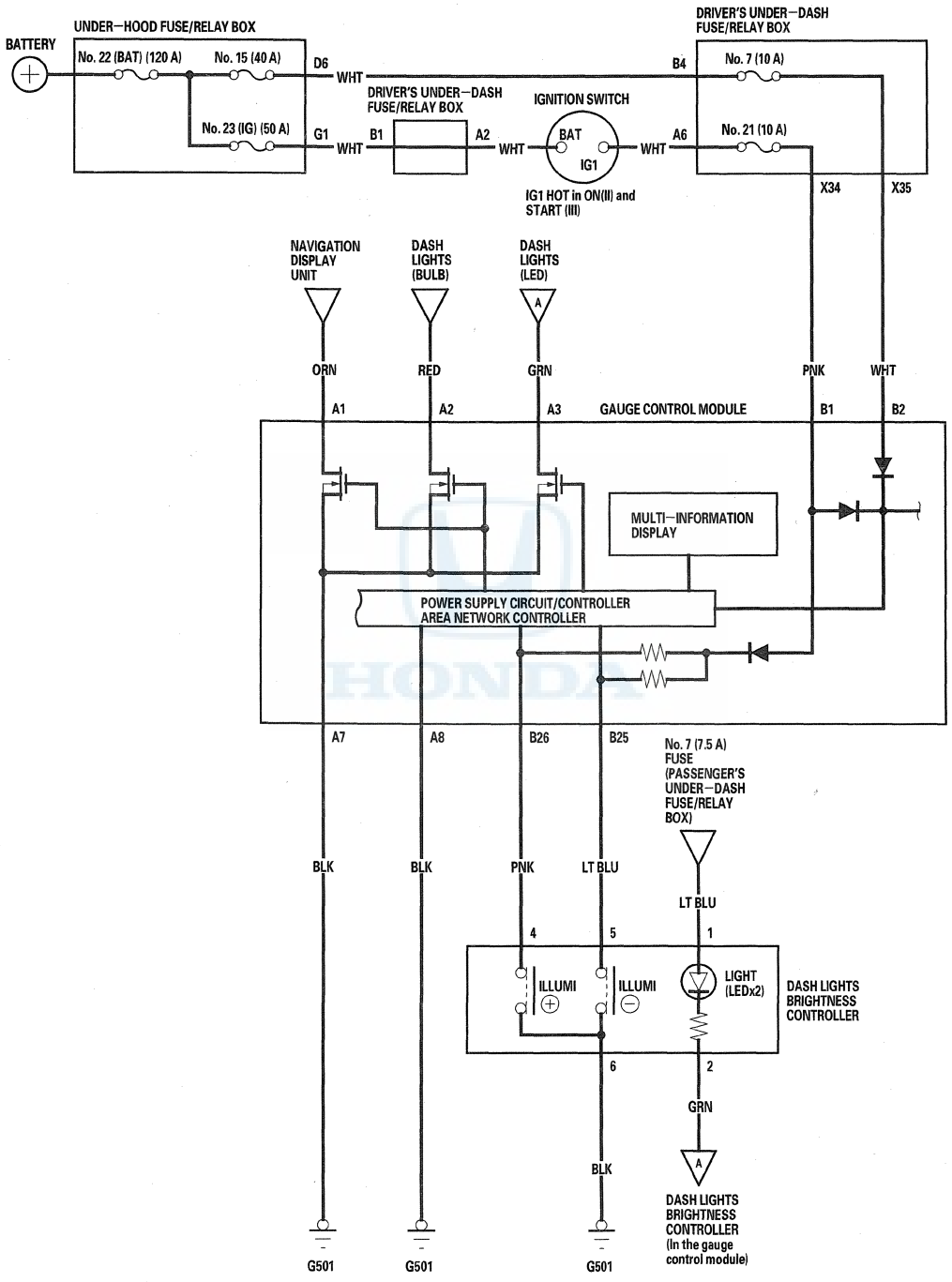

Dash Lights Brightness Controller Test/Replacement

1. Remove the instrument fascia (see page 20-99).
2. Disconnect the 6P connector (A) from the dash lights brightness controller (B).

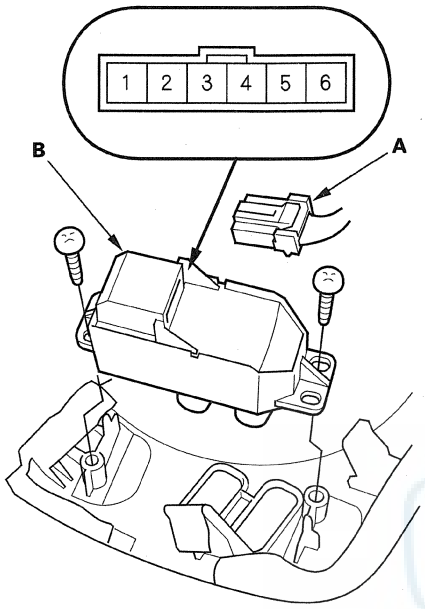

3. Remove the two screws and the dash lights brightness controller.
4. Check for continuity between terminals No. 5 and No. 6.
   - There should be continuity when the ILLUMI (−) button is pressed.
   - There should be no continuity when the ILLUMI (−) button is released.
5. Check for continuity between terminals No. 4 and No. 6.
   - There should be continuity when the ILLUMI (+) button is pressed.
   - There should be no continuity when the ILLUMI (+) button is released.
6. Check the LED by connecting battery power to terminal No. 1 and ground to terminal No. 2. The LED should come on.
7. If the continuity is not as specified, or the LED is faulty, replace the controller.

Adaptive Front Lighting System

Component Location Index

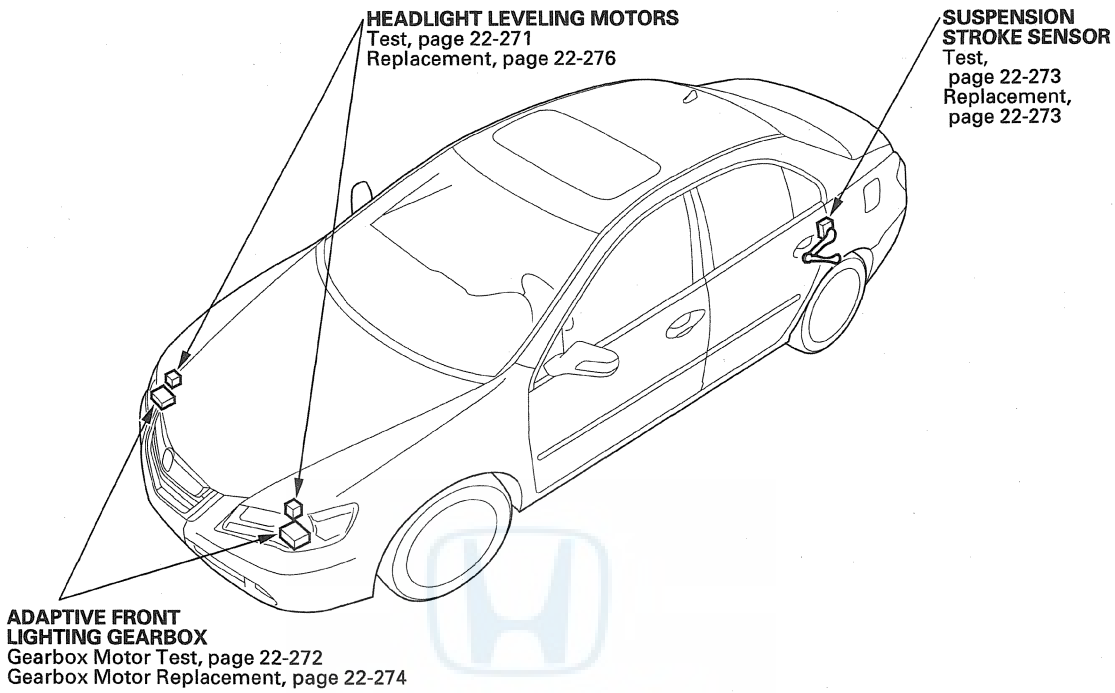

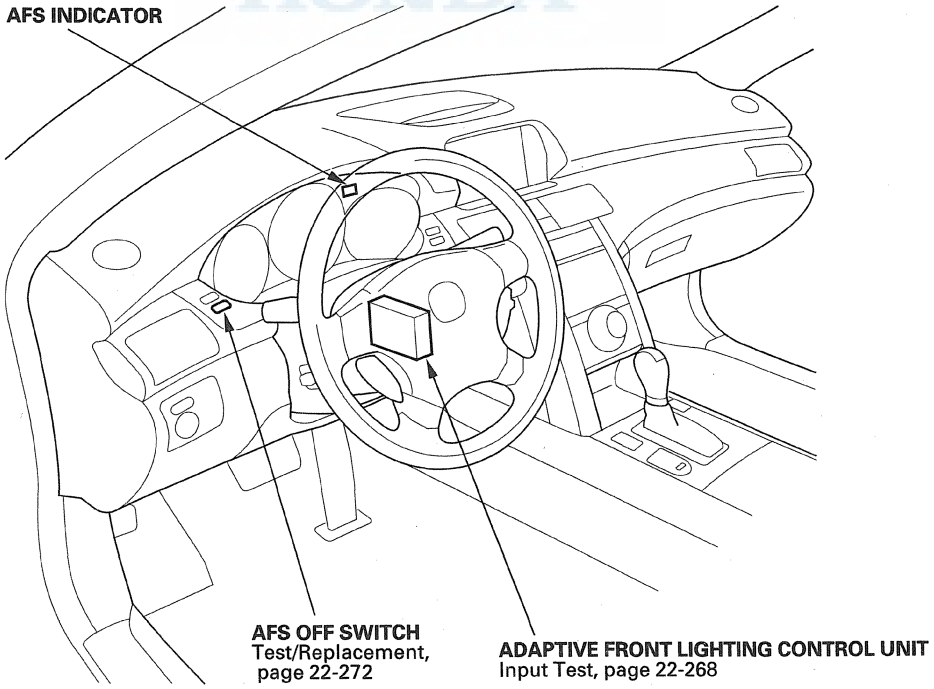

System Description

The adaptive front lighting control system consists of the adaptive front lighting control unit, suspension stroke sensor, steering angle sensor, headlight leveling motors, adaptive front lighting gearbox, AFS indicator in the gauge control module, and AFS OFF switch. The function of the system is to adjust the headlights for best aiming of the headlight beams. The suspension stroke motors move the headlight aiming up and down, and the adaptive front lighting gearbox moves the headlight aiming left and right. The suspension stroke sensor sends signals regarding vertical movement via the control unit to the headlight leveling motors, and the steering angle sensor and vehicle speed pulse send signals regarding horizontal movement via the control unit to the adaptive front lighting gearboxes. Also the control unit has a fail-safe function.

Swivel Control

The headlight swivel angle is controlled by the adaptive front lighting control unit that receives the steering angle information from the steering angle sensor via CAN line. The swivel control starts when the conditions shown are satisfied.

- Headlight switch is ON.
- AFS OFF switch is not pressed.
- Vehicle speed is over 5 mph (8 km/h).

Initialize function
When the headlight switch is ON, the swivel angle is initialized every time, whether the ignition switch is turned to ON (II) or to LOCK (0). The right headlight aiming moves right 22.2 degree and the left headlight aiming moves right 0.8 degree, then returns the headlight aiming to center and complete the initialization.

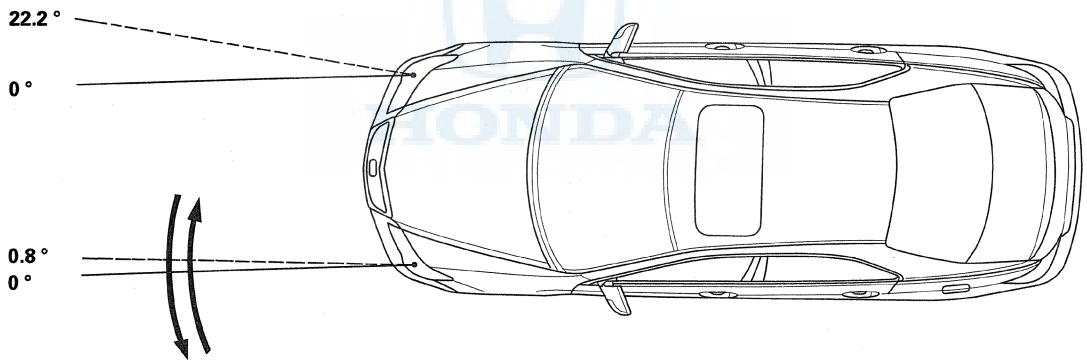

Leveling Control

The headlight leveling is controlled by the signals from the suspension stroke sensor. The leveling control starts when both the ignition switch and headlight switch are ON.

Fail-safe Function

If a malfunction occurs to any of the sensors, B-CAN line or control unit, the adaptive front lighting control system moves to fail-safe mode. In this case, the system stops control and the AFS indicator in the gauge control module blinks to show the malfunction. If the swivel control has a malfunction, the headlight aiming stays centered. If the leveling control has a malfunction, the headlight aiming stays at 0.6 degree under the present position.

Adaptive Front Lighting System

Circuit Diagram

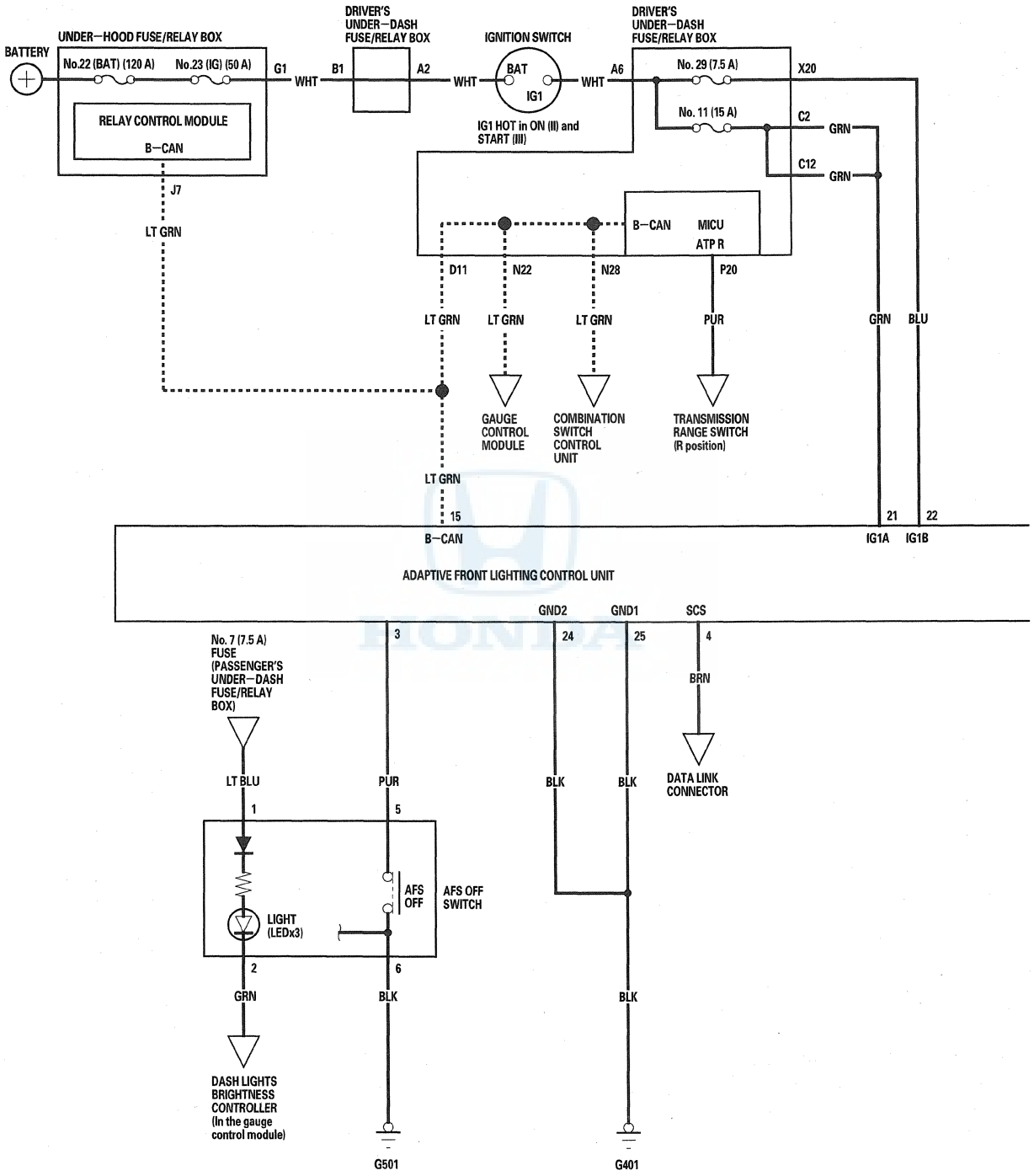

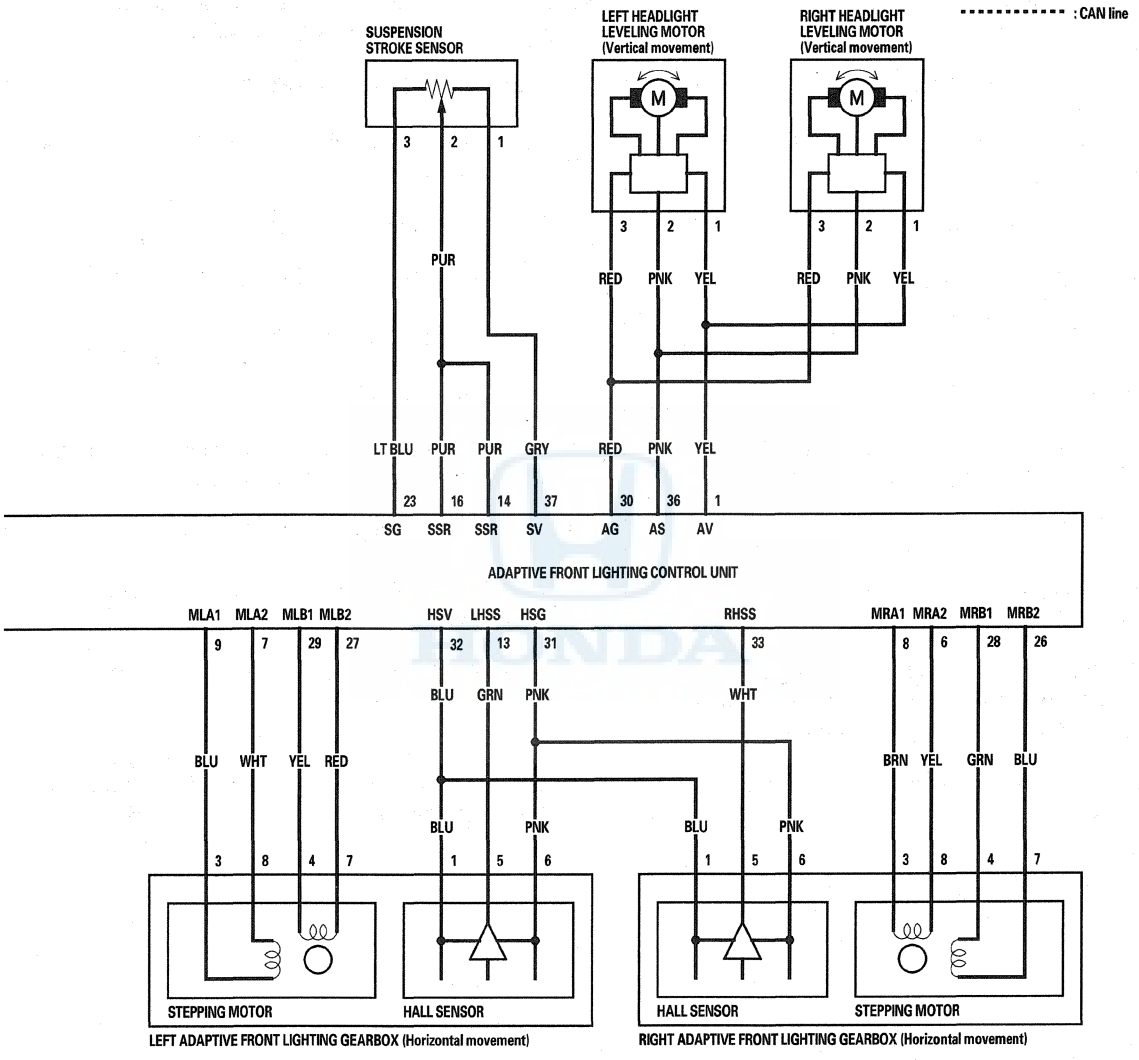
: CAN line
SUSPENSION STROKE SENSOR
LEFT HEADLIGHT LEVELING MOTOR (Vertical movement)
RIGHT HEADLIGHT LEVELING MOTOR (Vertical movement)
M
M
3 2 1
3 2 1
3 2 1
PUR
RED PNK YEL
RED PNK YEL
LT BLU PUR PUR GRY
RED PNK YEL
23 16 14 37
30 36 1
SG SSR SSR SV
AG AS AV
ADAPTIVE FRONT LIGHTING CONTROL UNIT
MLA1 MLA2 MLB1 MLB2
HSV LHSS HSG
RHSS
MRA1 MRA2 MRB1 MRB2
9 7 29 27
32 13 31
33
8 6 28 26
BLU GRN PNK
WHT
BLU WHT YEL RED
BRN YEL GRN BLU
BLU PNK
BLU PNK
3 8 4 7
1 5 6
1 5 6
3 8 4 7
STEPPING MOTOR
HALL SENSOR
HALL SENSOR
STEPPING MOTOR
LEFT ADAPTIVE FRONT LIGHTING GEARBOX (Horizontal movement)
RIGHT ADAPTIVE FRONT LIGHTING GEARBOX (Horizontal movement)

DTC Troubleshooting

DTC B2105: Adaptive Front Lighting Control Unit Lost Communication With Gauge Control Module (STEERING Message)

NOTE: If you are troubleshooting multiple DTCs, be sure to follow the instructions in B-CAN System Diagnosis Test Mode A (see page 22-131).

1. Clear the DTCs with the HDS.
2. Turn the ignition switch to LOCK (0) and then back to ON (II).
3. Wait for at least 6 seconds.
4. Check for DTCs with the HDS.

   Is DTC B2105 indicated?

   YES—Go to step 5.

   NO—Intermittent failure, the system is OK at this time. Check for loose or poor connections. ■
5. Check for DTCs with the HDS.

   Are DTCs B2106, B2107, and B2108 also indicated?

   YES—Replace the adaptive front lighting control unit, and do the adaptive front lighting control unit learning procedure (see page 22-265). ■

   NO—Do the gauge control module input test (see page 22-155). ■

DTC B2106: Adaptive Front Lighting Control Unit Lost Communication With Gauge Control Module (A/T Message)

NOTE: If you are troubleshooting multiple DTCs, be sure to follow the instructions in B-CAN System Diagnosis Test Mode A (see page 22-131).

1. Clear the DTCs with the HDS.
2. Turn the ignition switch to LOCK (0) and then back to ON (II).
3. Wait for at least 6 seconds.
4. Check for DTCs with the HDS.

   Is DTC B2106 indicated?

   YES—Go to step 5.

   NO—Intermittent failure, the system is OK at this time. Check for loose or poor connections. ■
5. Check for DTCs with the HDS.

   Are DTCs B1008, B1061, and B1808 also indicated?

   YES—Do the gauge control module input test (see page 22-155). ■

   NO—Replace the adaptive front lighting control unit, and do the adaptive front lighting control unit learning procedure (see page 22-265). ■

DTC B2107: Adaptive Front Lighting Control Unit Lost Communication With MICU (MICU Message)

NOTE: If you are troubleshooting multiple DTCs, be sure to follow the instructions in B-CAN System Diagnosis Test Mode A (see page 22-131).

1. Clear the DTCs with the HDS.
2. Turn the ignition switch to LOCK (0) and then back to ON (II).
3. Wait for at least 6 seconds.
4. Check for DTCs with the HDS.

   Is DTC B2107 indicated?

   YES—Go to step 5.

   NO—Intermittent failure, the system is OK at this time. Check for loose or poor connections. ■
5. Check for DTCs with the HDS.

   Are DTCs B1055, B1157, B1255, B1605, B1806, and B2155 also indicated?

   YES—Do the MICU input test (see page 22-152). ■

   NO—Replace the adaptive front lighting control unit, and do the adaptive front lighting control unit learning procedure (see page 22-265). ■

DTC B2108: Adaptive Front Lighting Control Unit Lost Communication With Combination Switch Control Unit (HLSW Message)

NOTE: If you are troubleshooting multiple DTCs, be sure to follow the instructions in B-CAN System Diagnosis Test Mode A (see page 22-131).

1. Clear the DTCs with the HDS.
2. Turn the ignition switch to LOCK (0) and then back to ON (II).
3. Wait for at least 6 seconds.
4. Check for DTCs with the HDS.

   Is DTC B2108 indicated?

   YES—Go to step 5.

   NO—Intermittent failure, the system is OK at this time. Check for loose or poor connections. ■
5. Check for DTCs with the HDS.

   Are DTCs B1007, B1062, and B1155 also indicated?

   YES—Do the combination switch control unit input test (see page 22-382). ■

   NO—Replace the adaptive front lighting control unit, and do the adaptive front lighting control unit learning procedure (see page 22-265). ■

DTC Troubleshooting (cont'd)

DTC B2127: Steering Angle Sensor Malfunction

NOTE: If you are troubleshooting multiple DTCs, be sure to follow the instructions in B-CAN System Diagnosis Test Mode A (see page 22-131).

1. Clear the DTCs with the HDS.
2. Turn the ignition switch to LOCK (0) and then back to ON (II).
3. Check for DTCs with the HDS.

   Is DTC B2127 indicated?

   YES—Go to step 4.

   NO—Intermittent failure, the system is OK at this time. Check for loose or poor connections. ■
4. Check for DTCs in the VSA system with the HDS.

   Are any DTCs indicated?

   YES—Go to the VSA indicated DTC's troubleshooting (see page 19-65). ■

   NO—Go to step 5.
5. Check for DTCs with the HDS.

   Is DTC B2105 indicated?

   YES—Troubleshoot DTC B2105. ■

   NO—Replace the adaptive front lighting control unit. ■

DTC B2131: Steering Angle Sensor MAX Error

NOTE: If you are troubleshooting multiple DTCs, be sure to follow the instructions in B-CAN System Diagnosis Test Mode A (see page 22-131).

1. Clear the DTCs with the HDS.
2. Turn the ignition switch to LOCK (0) and then back to ON (II).
3. Check for DTCs with the HDS.

   Is DTC B2131 indicated?

   YES—Go to step 4.

   NO—Intermittent failure, the system is OK at this time. Check for loose or poor connections. ■
4. Check for DTCs in the VSA system with the HDS.

   Are any DTCs indicated?

   YES—Go to the VSA indicated DTC's troubleshooting (see page 19-65). ■

   NO—Go to step 5.
5. Check for DTCs with the HDS.

   Is DTC B1170 indicated?

   YES—Troubleshoot DTC B1170. ■

   NO—Go to step 6.
6. Check for DTCs with the HDS.

   Is DTC B2105 indicated?

   YES—Troubleshoot DTC B2105. ■

   NO—Replace the adaptive front lighting control unit. ■

DTC B2135: A/T Reverse Signal Error

NOTE: If you are troubleshooting multiple DTCs, be sure to follow the instructions in B-CAN System Diagnosis Test Mode A (see page 22-131).

1. Connect the HDS to the data link connector.
2. Turn the ignition switch to LOCK (0) and then back to ON (II).
3. Check for A/T system DTCs with the HDS.

   Is there any DTC other than B2135 indicated?

   YES—Go to the indicated DTC troubleshooting. ■

   NO—Go to step 4.
4. Clear the DTC with the HDS.
5. Turn the ignition switch to LOCK (0) and then back to ON (II).
6. Check for DTCs with the HDS.

   Is the DTC B2135 indicated?

   YES—Go to step 7.

   NO—Intermittent failure, the system is OK at this time. Check for loose or poor connections. ■
7. Shift the lever from P to R position.
8. Select TEST MODE menu from the HDS, and enter DATA LIST.
9. Check the ON/OFF information of the AT SHIFT R POSITION in the DATA LIST.

   Is the information indicated ON?

   YES—Replace the adaptive front lighting control unit, and do the adaptive front lighting control unit learning procedure (see page 22-265). ■

   NO—Do the MICU input test and check power, ground, and the B-CAN line (see page 22-152). ■

DTC Troubleshooting (cont'd)

DTC B2136: Left Adaptive Front Lighting Gearbox Motor Signal Error

NOTE: If you are troubleshooting multiple DTCs, be sure to follow the instructions in B-CAN System Diagnosis Test Mode A (see page 22-131).

1. Clear the DTCs with the HDS.
2. Turn the ignition switch to LOCK (0) and then back to ON (II).
3. Turn the headlight switch ON.
4. Select BODY ELECTRICAL menu from the HDS.
5. Select AFS from the HDS, then enter TEST MODE MENU.
6. Select FUNCTION TEST, then select ADAPTIVE FRONT LIGHTING.
7. Select HEADLIGHT-LEFT/RIGHT and HEADLIGHT-UP/DOWN with the HDS, and move the adaptive front lighting gearbox motor.
8. Check for the DTC with the HDS.

   Is DTC B2136 indicated?

   YES—Go to step 9.

   NO—Intermittent failure, the system is OK at this time. Check for loose or poor connections. ■

9. Turn the ignition switch to LOCK (0).
10. Test the left adaptive front lighting gearbox (see page 22-272).

    Is the left adaptive front lighting gearbox OK?

    YES—Go to step 11.

    NO—Replace the left adaptive front lighting gearbox. ■

11. Disconnect the adaptive front lighting control unit 40P connector.
12. Disconnect the left adaptive front lighting gearbox 8P connector.
13. Check for continuity between body ground and left adaptive front lighting gearbox 8P connector terminals No. 3, No. 4, No. 7, and No. 8 individually.

LEFT ADAPTIVE FRONT LIGHTING GEARBOX 8P CONNECTOR

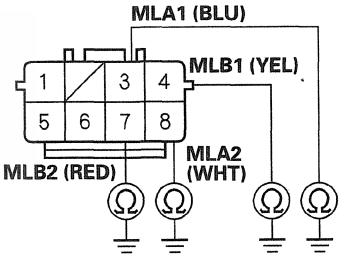

Wire side of female terminals

Is there continuity?

YES—Repair a short to ground in the wire. ■

NO—Replace the adaptive front lighting control unit, and do the adaptive front lighting control unit learning procedure (see page 22-265). ■

DTC B2137: Right Adaptive Front Lighting Gearbox Motor Signal Error

NOTE: If you are troubleshooting multiple DTCs, be sure to follow the instructions in B-CAN System Diagnosis Test Mode A (see page 22-131).

1. Clear the DTCs with the HDS.
2. Turn the ignition switch to LOCK (0) and then back to ON (II).
3. Turn the headlight switch ON.
4. Select BODY ELECTRICAL menu from the HDS.
5. Select AFS from the HDS, then enter TEST MODE menu.
6. Select FUNCTION TEST, then select ADAPTIVE FRONT LIGHTING.
7. Select HEADLIGHT-LEFT/RIGHT and HEADLIGHT-UP/DOWN with the HDS, and move adaptive front lighting gearbox motor.
8. Check for the DTC with the HDS.

   Is DTC B2137 indicated?

   YES—Go to step 9.

   NO—Intermittent failure, the system is OK at this time. Check for loose or poor connections. ■
9. Turn the ignition switch to LOCK (0).
10. Test the right adaptive front lighting gearbox (see page 22-272).

    Is the right adaptive front lighting gearbox OK?

    YES—Go to step 11.

    NO—Replace the right adaptive front lighting gearbox. ■
11. Disconnect the adaptive front lighting control unit 40P connector.
12. Disconnect the right adaptive front lighting gearbox 8P connector.
13. Check for continuity between body ground and right adaptive front lighting gearbox 8P connector terminals No. 3, No. 4, No. 7, and No. 8 individually.

RIGHT ADAPTIVE FRONT LIGHTING GEARBOX 8P CONNECTOR

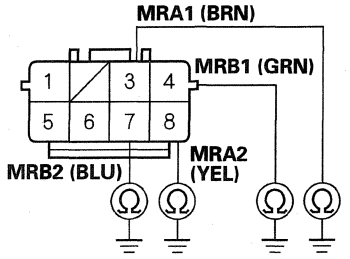

Wire side of female terminals

Is there continuity?

YES—Repair a short to ground in the wire. ■

NO—Replace the adaptive front lighting control unit, and do the adaptive front lighting learning procedure (see page 22-265). ■

DTC Troubleshooting (cont'd)

DTC B2139: Headlight Leveling Motor Power Supply Circuit Error

NOTE: If you are troubleshooting multiple DTCs, be sure to follow the instructions in B-CAN System Diagnosis Test Mode A (see page 22-131).

1. Clear the DTCs with the HDS.
2. Turn the ignition switch to LOCK (0) and then back to ON (II).
3. Turn the headlight switch ON.
4. Check for DTCs with the HDS.

   Is DTC B2139 indicated?

   YES—Go to step 5.

   NO—Intermittent failure, the system is OK at this time. Check for loose or poor connections. ■
5. Turn the ignition switch to LOCK (0).
6. Disconnect the adaptive front lighting control unit 40P connector.
7. Disconnect the left and right headlight leveling motor 3P connectors.
8. Check for continuity between adaptive front lighting control unit 40P connector terminal No. 1 and body ground.

ADAPTIVE FRONT LIGHTING CONTROL UNIT 40P CONNECTOR

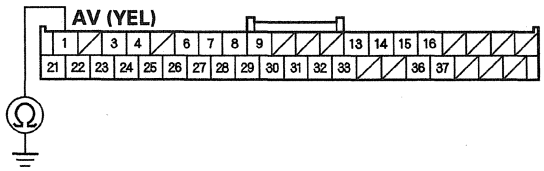

Wire side of female terminals

Is there continuity?

YES—Repair a short to ground in the wire. ■

NO—Go to step 9.

9. Reconnect the adaptive front lighting control unit 40P connector.
10. Turn the ignition switch to ON (II).
11. Measure the voltage between adaptive front lighting control unit 40P connector terminals No. 1 and No. 30.

ADAPTIVE FRONT LIGHTING CONTROL UNIT 40P CONNECTOR

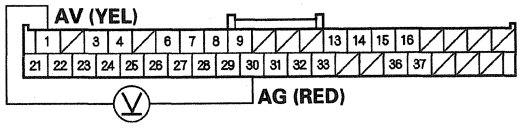

Wire side of female terminals

Is there about 5 V?

YES—Do the headlight leveling motor test (see page 22-271). ■

NO—Go to step 12.

12. Measure the voltage between body ground and adaptive front lighting control unit 40P connector terminals No. 21 and No. 22 individually.

ADAPTIVE FRONT LIGHTING CONTROL UNIT 40P CONNECTOR

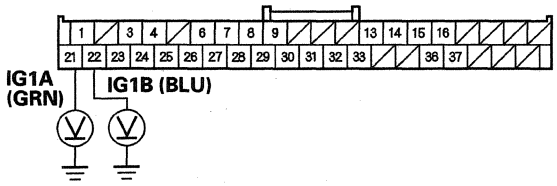

Wire side of female terminals

Is there battery voltage?

YES—Go to step 13.

NO—Check the No. 11 (7.5 A) and No. 29 (7.5 A) fuses in the driver's under-dash fuse/relay box. If the fuses are OK, check for an open in the wire between the driver's under-dash fuse/relay box and the adaptive front lighting control unit. If one of the fuses is blown, replace the fuse and check for a short in the wire between the driver's under-dash fuse/relay box and the adaptive front lighting control unit. ■

13. Measure the voltage between body ground and adaptive front lighting control unit 40P connector terminals No. 24 and No. 25 individually.

ADAPTIVE FRONT LIGHTING CONTROL UNIT 40P CONNECTOR

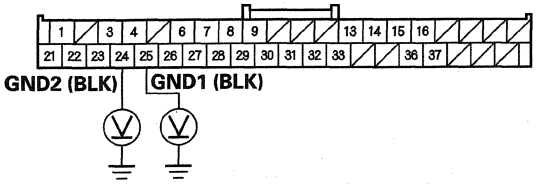

Wire side of female terminals

Is there less than 0.2 V?

YES—Replace the adaptive front lighting control unit, and do the adaptive front lighting control unit learning procedure (see page 22-265). ■

NO—Repair poor ground (G401) or an open in the wire. ■

DTC Troubleshooting (cont'd)

DTC B2140: Headlight Leveling Motor Signal Circuit Error

NOTE: If you are troubleshooting multiple DTCs, be sure to follow the instructions in B-CAN System Diagnosis Test Mode A (see page 22-131).

1. Clear the DTCs with the HDS.
2. Turn the ignition switch to LOCK (0) and then back to ON (II).
3. Turn the headlight switch ON.
4. Check for DTCs with the HDS.

   Is DTC B2140 indicated?

   YES—Go to step 5.

   NO—Intermittent failure, the system is OK at this time. Check for loose or poor connections. ■
5. Turn the ignition switch to LOCK (0).
6. Disconnect the adaptive front lighting control unit 40P connector.
7. Disconnect the left and right headlight leveling motor 3P connectors.
8. Check for continuity between adaptive front lighting control unit 40P connector terminal No. 36 and body ground.

ADAPTIVE FRONT LIGHTING CONTROL UNIT 40P CONNECTOR

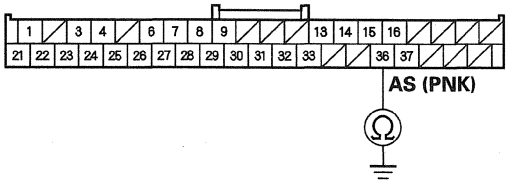

Wire side of female terminals

Is there continuity?

YES—Repair short to ground in the wire. ■

NO—Go to step 9.

9. Connect headlight leveling motor 3P connector terminal No. 2 to body ground with a jumper wire.

HEADLIGHT LEVELING MOTOR 3P CONNECTOR

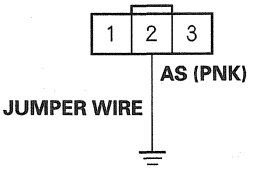

Wire side of female terminals

10. Check for continuity between adaptive front lighting control unit 40P connector terminal No. 36 and body ground.

ADAPTIVE FRONT LIGHTING CONTROL UNIT 40P CONNECTOR

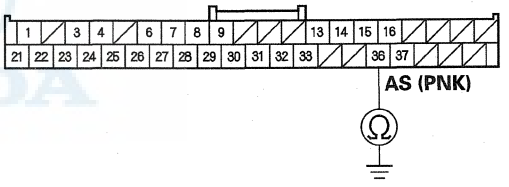

Wire side of female terminals

Is there continuity?

YES—Go to step 11.

NO—Repair an open in the wire. ■

11. Reconnect the adaptive front lighting control unit 40P connector.
12. Reconnect both headlight leveling motor 3P connectors.

13. Turn the ignition switch to ON (II).

14. Measure the voltage between adaptive front lighting control unit 40P connector terminals No. 36 (+) and No. 30 (−).

ADAPTIVE FRONT LIGHTING CONTROL UNIT 40P CONNECTOR

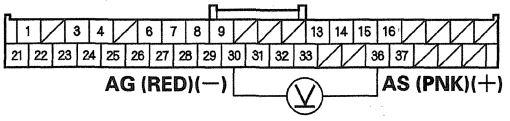

Wire side of female terminals

Is there about 0.5−4.5 V?

YES—Replace the adaptive front lighting control unit, and do the adaptive front lighting control unit learning procedure (see page 22-265). ■

NO—Do the headlight leveling motor test (see page 22-271). ■

DTC B2141: Suspension Stroke Sensor Output Error

NOTE: If you are troubleshooting multiple DTCs, be sure to follow the instructions in B-CAN System Diagnosis Test Mode A (see page 22-131).

1. Clear the DTCs with the HDS.
2. Turn the ignition switch to LOCK (0) and then back to ON (II).
3. Turn the headlight switch ON.
4. Check for DTCs with the HDS.

   Is DTC B2141 indicated?

   YES—Go to step 5.

   NO—Intermittent failure, the system is OK at this time. Check for loose or poor connections. ■
5. Turn the ignition switch to LOCK (0).
6. Disconnect the adaptive front lighting control unit 40P connector.

(cont'd)

DTC Troubleshooting (cont'd)

7. Disconnect the suspension stroke sensor 3P connector.

8. Check for continuity between body ground and adaptive front lighting control unit 40P connector terminals No. 14, No. 16, No. 23, and No. 37 individually.

ADAPTIVE FRONT LIGHTING CONTROL UNIT 40P CONNECTOR

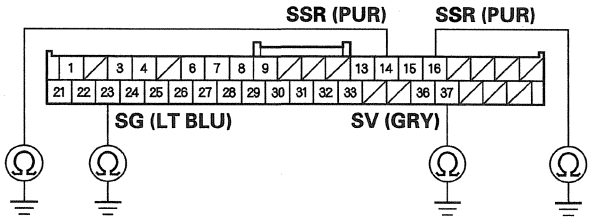

Wire side of female terminals

Is there continuity?

YES—Repair a short to ground in the wire. ■

NO—Go to step 9.

9. Connect suspension stroke sensor 3P connector No. 2 terminal to body ground with a jumper wire.

SUSPENSION STROKE SENSOR 3P CONNECTOR

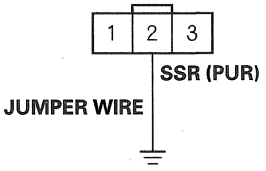

Wire side of female terminals

10. Check for continuity between body ground and adaptive front lighting control unit 40P connector terminal No. 14 and No. 16.

ADAPTIVE FRONT LIGHTING CONTROL UNIT 40P CONNECTOR

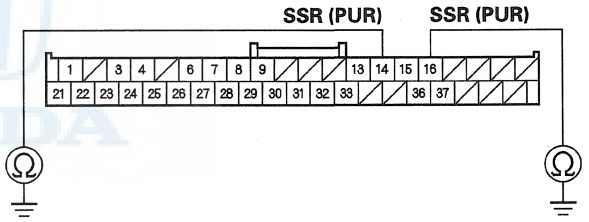

Wire side of female terminals

Is there continuity?

YES—Go to step 11.

NO—Repair an open in the wire. ■

11. Connect suspension stroke sensor 3P connector terminal No. 1 to body ground with a jumper wire.

SUSPENSION STROKE SENSOR 3P CONNECTOR

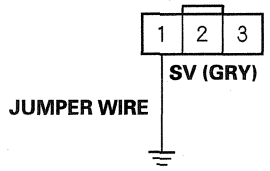

Wire side of female terminals

12. Check for continuity between adaptive front lighting control unit 40P connector terminal No. 37 and body ground.

ADAPTIVE FRONT LIGHTING CONTROL UNIT 40P CONNECTOR

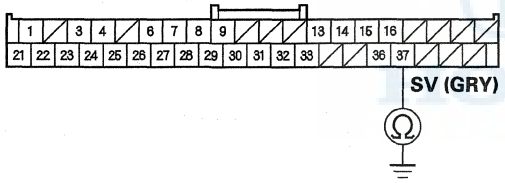

Wire side of female terminals

Is there continuity?

YES—Go to step 13.

NO—Repair an open in the wire. ■

13. Connect suspension stroke sensor 3P connector terminal No. 3 to body ground with a jumper wire.

SUSPENSION STROKE SENSOR 3P CONNECTOR

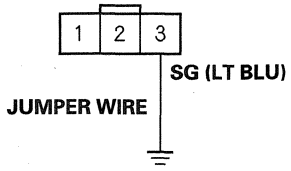

Wire side of female terminals

14. Check for continuity between adaptive front lighting control unit 40P connector terminal No. 23 and body ground.

ADAPTIVE FRONT LIGHTING CONTROL UNIT 40P CONNECTOR

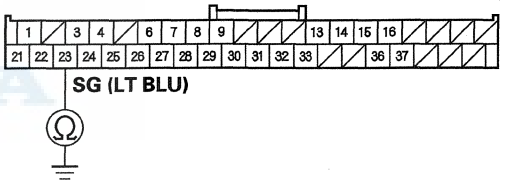

Wire side of female terminals

Is there continuity?

YES—Go to step 15.

NO—Repair an open in the wire. ■

(cont'd)

DTC Troubleshooting (cont'd)

15. Reconnect the adaptive front lighting control unit 40P connector.
16. Turn the ignition switch to ON (II).
17. Measure the voltage between adaptive front lighting control unit 40P connector terminals No. 37 (+) and No. 23 (−).

ADAPTIVE FRONT LIGHTING CONTROL UNIT 40P CONNECTOR

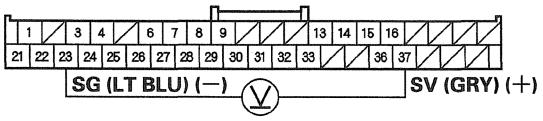

Wire side of female terminals

Is there about 4.5−5.5 V?

YES—Go to step 18.

NO—Go to step 22.

18. Turn the ignition switch to LOCK (0).
19. Reconnect the suspension stroke sensor 3P connector.
20. Turn the ignition switch to ON (II).
21. Measure the voltage between adaptive front lighting control unit 40P connector terminals No. 14 (+) and No. 23 (−).

ADAPTIVE FRONT LIGHTING CONTROL UNIT 40P CONNECTOR

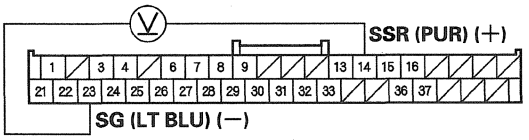

Wire side of female terminals

Is there about 0.5−4.5 V?

YES—Replace the adaptive front lighting control unit, and do the adaptive front lighting control unit learning procedure (see page 22-265). ■

NO—Replace the suspension stroke sensor (see page 22-273). ■

22. Measure the voltage between body ground and adaptive front lighting control unit 40P connector terminals No. 21 and No. 22 individually.

ADAPTIVE FRONT LIGHTING CONTROL UNIT 40P CONNECTOR

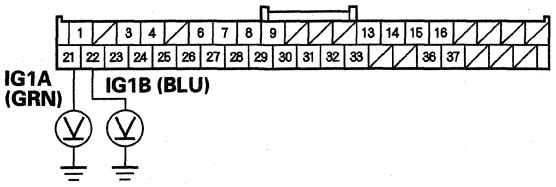

Wire side of female terminals

Is there battery voltage?

YES—Replace the adaptive front lighting control unit, and do the adaptive front lighting control unit learning procedure (see page 22-265). ■

NO—Check the No. 11 (7.5 A) and No. 29 (7.5 A) fuses in the driver's under-dash fuse/relay box. If the fuses are OK, check for an open in the wire between the driver's under-dash fuse/relay box and the adaptive front lighting control unit. If one of the fuses is blown, replace the fuse and check for a short in the wire between the driver's under-dash fuse/relay box and the adaptive front lighting control unit. ■

DTC B2142: Adaptive Front Lighting Control Unit Sub CPU Communication Error

DTC B2143: Adaptive Front Lighting Control Unit Sub CPU Memory Error

DTC B2144: Adaptive Front Lighting Control Unit Sub CPU EEPROM Error

NOTE: If you are troubleshooting multiple DTCs, be sure to follow the instructions in B-CAN System Diagnosis Test Mode A (see page 22-131).

1. Clear the DTCs with the HDS.
2. Turn the ignition switch to LOCK (0) and then back to ON (II).
3. Check for DTCs with the HDS.

Are DTCs B2142, B2143, and/or B2144 indicated?

YES—Replace the adaptive front lighting control unit, and do the adaptive front lighting control unit learning procedure (see page 22-265). ■

NO—Intermittent failure, the system is OK at this time. Check for loose or poor connections. ■

DTC Troubleshooting (cont'd)

DTC B2145: Left Adaptive Front Lighting Gearbox Motor Swing Error

NOTE: If you are troubleshooting multiple DTCs, be sure to follow the instructions in B-CAN System Diagnosis Test Mode A (see page 22-131).

1. Clear the DTCs with the HDS.
2. Turn the ignition switch to LOCK (0) and then back to ON (II).
3. Turn the headlight switch ON.
4. Turn the steering wheel to the left or to the right 90 degrees or more from the center position.
5. Select BODY ELECTRICAL menu from the HDS.
6. While maintaining communication with the HDS, test-drive in a straight line for 98.4 feet (30 m) at least 16 mph (25 km/h).
7. Check the AFS indicator in the gauge control module.

   Does the AFS indicator come on?

   YES—Go to step 10.

   NO—Go to step 8.
8. Select ADAPTIVE FRONT LIGHTING from the HDS, and enter DATA LIST.
9. Check the STEERING ANGLE LEARN information in the DATA LIST.

   Is the steering angle learn finished?

   YES—Go to step 10.

   NO—Go to step 6, and repeat the procedure.
10. Test-drive at 7 mph (10 km/h) for at least 3 minutes.
11. Check for DTCs with the HDS.

    Are any other DTCs indicated with B2145?

    YES—Troubleshoot the indicated DTC. ■

    NO—Go to step 12.
12. Select FUNCTION TEST from the HDS.
13. Select ADAPTIVE FRONT LIGHTING, and check the headlights operation.

    NOTE: The left headlight should move 20 degrees to the left then return, and the right headlight should move 20 degrees to the right then return.

    Do the headlights operate normally?

    YES—Go to step 14.

    NO—Go to step 29.
14. Turn the ignition switch to LOCK (0).
15. Disconnect the adaptive front lighting control unit 40P connector.
16. Disconnect the left and right adaptive front lighting gearbox 8P connectors.

17. Check for continuity between body ground and adaptive front lighting control unit 40P connector terminals No. 13, No. 31, and No. 32 individually.

ADAPTIVE FRONT LIGHTING CONTROL UNIT 40P CONNECTOR

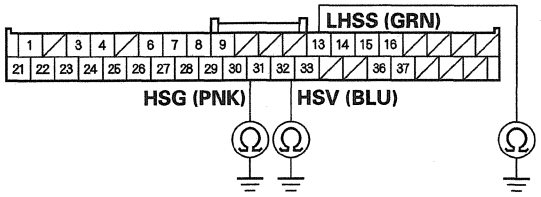

Wire side of female terminals

Is there continuity?

YES—Repair a short to ground in the wire. ■

NO—Go to step 18.

18. Connect left adaptive front lighting gearbox 8P connector terminal No. 5 to body ground with a jumper wire.

LEFT ADAPTIVE FRONT LIGHTING GEARBOX 8P CONNECTOR

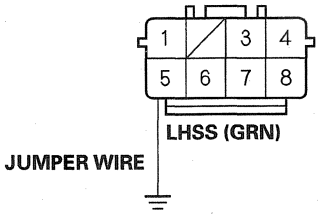

Wire side of female terminals

19. Check for continuity between adaptive front lighting control unit 40P connector terminal No. 13 and body ground.

ADAPTIVE FRONT LIGHTING CONTROL UNIT 40P CONNECTOR

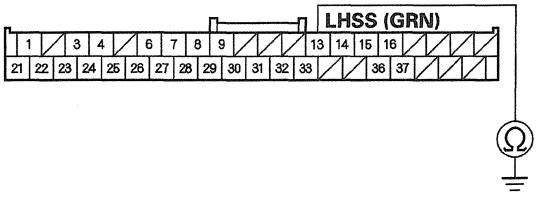

Wire side of female terminals

Is there continuity?

YES—Go to step 20.

NO—Repair an open in the wire. ■

20. Connect left adaptive front lighting gearbox 8P connector terminal No. 1 to body ground with a jumper wire.

LEFT ADAPTIVE FRONT LIGHTING GEARBOX 8P CONNECTOR

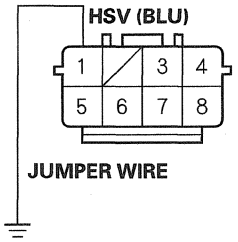

Wire side of female terminals

(cont'd)

DTC Troubleshooting (cont'd)

21. Check for continuity between adaptive front lighting control unit 40P connector terminal No. 32 and body ground.

ADAPTIVE FRONT LIGHTING CONTROL UNIT 40P CONNECTOR

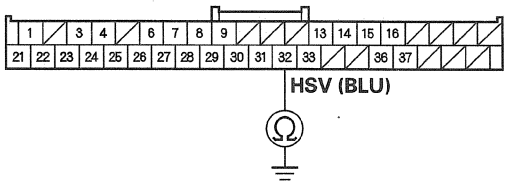

Wire side of female terminals

Is there continuity?

YES—Go to step 22.

NO—Repair an open in the wire. ■

22. Connect left adaptive front lighting gearbox 8P connector terminal No. 6 to body ground with a jumper.

LEFT ADAPTIVE FRONT LIGHTING GEARBOX 8P CONNECTOR

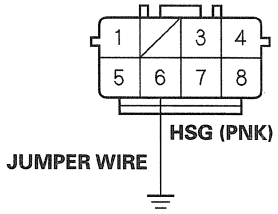

Wire side of female terminals

23. Check for continuity between adaptive front lighting control unit 40P connector terminal No. 31 and body ground.

ADAPTIVE FRONT LIGHTING CONTROL UNIT 40P CONNECTOR

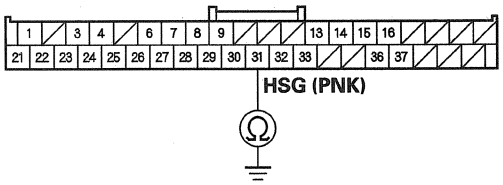

Wire side of female terminals

Is there continuity?

YES—Go to step 24.

NO—Repair an open in the wire. ■

24. Reconnect all connectors.

25. Turn the ignition switch to ON (II).

26. Do the adaptive front lighting control unit learning procedure (see page 22-265).

27. Turn the steering wheel to the center position, and hold it in that position.

28. Measure the voltage between adaptive front lighting control unit 40P connector terminals No. 13 (+) and No. 31 (−).

ADAPTIVE FRONT LIGHTING CONTROL UNIT 40P CONNECTOR

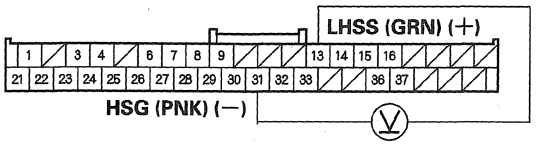

Wire side of female terminals

Is there about 0.8− 1.5 V?

YES—Replace the adaptive front lighting control unit, and do the adaptive front lighting control unit learning procedure (see page 22-265). ■

NO—Faulty hall sensor, replace the left adaptive front lighting gearbox (see page 22-274). ■

29. Turn the ignition switch to LOCK (0).

30. Disconnect the left adaptive front lighting gearbox 8P connector.

31. Test the left adaptive front lighting gearbox (see page 22-272).

Is the left adaptive front lighting gearbox OK?

YES—Go to step 32.

NO—Replace the left adaptive front lighting gearbox (see page 22-274). ■

32. Disconnect the adaptive front lighting control unit 40P connector.

33. Connect left adaptive front lighting gearbox 8P connector terminals No. 3, No. 4, No. 7, and No. 8 to body ground with jumper wires.

LEFT ADAPTIVE FRONT LIGHTING GEARBOX 8P CONNECTOR

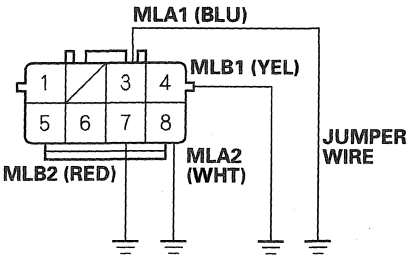

Wire side of female terminals

34. Check for continuity between body ground and adaptive front lighting control unit 40P connector terminals No. 7, No. 9, No. 27, and No. 29 individually.

ADAPTIVE FRONT LIGHTING CONTROL UNIT 40P CONNECTOR

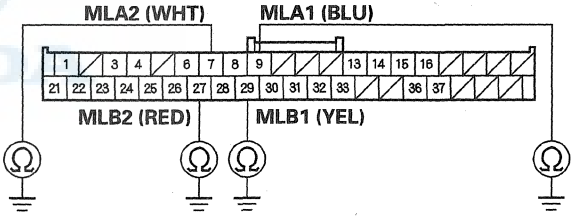

Wire side of female terminals

Is there continuity?

YES—Replace the adaptive front lighting control unit, and do the adaptive front lighting control unit learning procedure (see page 22-265). ■

NO—Repair an open in the wire. ■

DTC Troubleshooting (cont'd)

DTC B2146: Right Adaptive Front Lighting Gearbox Motor Swing Error

NOTE: If you are troubleshooting multiple DTCs, be sure to follow the instructions in B-CAN System Diagnosis Test Mode A (see page 22-131).

1. Clear the DTCs with the HDS.
2. Turn the ignition switch to LOCK (0) and then back to ON (II).
3. Turn the headlight switch ON.
4. Turn the steering wheel to the left or to the right 90 degrees or more from the center position.
5. Select BODY ELECTRICAL menu from the HDS.
6. While maintaining communication with the HDS, test-drive in a straight line for 98.4 feet (30 m) at least 16 mph (25 km/h).
7. Check the AFS indicator in the gauge control module.

   Does the AFS indicator come on?

   YES—Go to step 10.

   NO—Go to step 8.
8. Select AFS from the HDS, and enter DATA LIST.
9. Check the STEERING ANGLE LEARN information in the DATA LIST.

   Is the steering angle learn finished?

   YES—Go to step 10.

   NO—Go to step 6, and repeat the procedure.
10. Test-drive at 7 mph (10 km/h) for at least 3 minutes.
11. Check for DTCs with the HDS.

    Are any other DTCs indicated with B2146?

    YES—Troubleshoot the indicated DTC. ■

    NO—Go to step 12.
12. Select FUNCTION TEST from the HDS.
13. Select ADAPTIVE FRONT LIGHTING, and check the headlights operation.

    NOTE: The left headlight should move 20 degrees to the left side and return, and the right headlight should move 20 degrees to the right side and return.

    Do the headlights operate normally?

    YES—Go to step 14.

    NO—Go to step 29.
14. Turn the ignition switch to LOCK (0).
15. Disconnect the adaptive front lighting control unit 40P connector.
16. Disconnect the left and right adaptive front lighting gearbox 8P connectors.

17. Check for continuity between body ground and adaptive front lighting control unit 40P connector terminals No. 31, No. 32, and No. 33 individually.

ADAPTIVE FRONT LIGHTING CONTROL UNIT 40P CONNECTOR

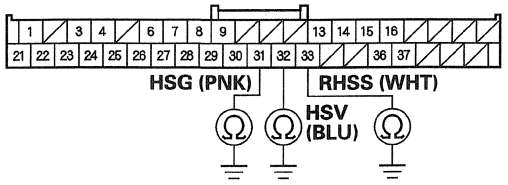

Wire side of female terminals

Is there continuity?

YES—Repair a short to ground in the wire. ■

NO—Go to step 18.

18. Connect right adaptive front lighting gearbox 8P connector No. 5 terminal to body ground with a jumper wire.

RIGHT ADAPTIVE FRONT LIGHTING GEARBOX 8P CONNECTOR

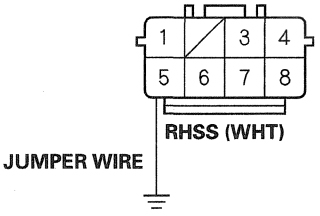

Wire side of female terminals

19. Check for continuity between adaptive front lighting control unit 40P connector terminal No. 33 and body ground.

ADAPTIVE FRONT LIGHTING CONTROL UNIT 40P CONNECTOR

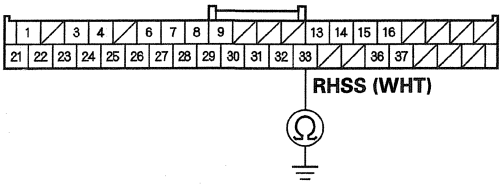

Wire side of female terminals

Is there continuity?

YES—Go to step 20.

NO—Repair an open in the wire. ■

20. Connect right adaptive front lighting gearbox 8P connector No. 1 terminal to body ground with a jumper wire.

RIGHT ADAPTIVE FRONT LIGHTING GEARBOX 8P CONNECTOR

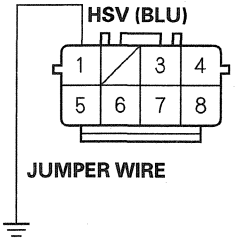

Wire side of female terminals

(cont'd)

DTC Troubleshooting (cont'd)

21. Check for continuity between adaptive front lighting control unit 40P connector terminal No. 32 and body ground.

ADAPTIVE FRONT LIGHTING CONTROL UNIT 40P CONNECTOR

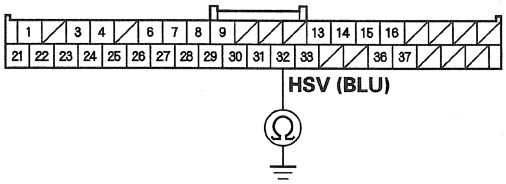

Wire side of female terminals

Is there continuity?

YES—Go to step 22.

NO—Repair an open in the wire. ■

22. Connect right adaptive front lighting gearbox 8P connector terminal No. 6 to body ground with a jumper wire.

RIGHT ADAPTIVE FRONT LIGHTING GEARBOX 8P CONNECTOR

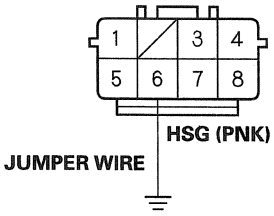

Wire side of female terminals

23. Check for continuity between adaptive front lighting control unit 40P connector terminal No. 31 and body ground.

ADAPTIVE FRONT LIGHTING CONTROL UNIT 40P CONNECTOR

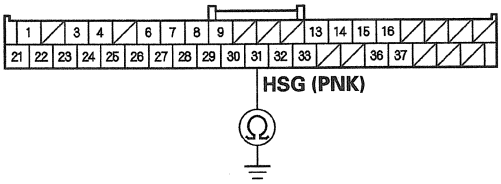

Wire side of female terminals

Is there continuity?

YES—Go to step 24.

NO—Repair an open in the wire. ■

24. Reconnect all connectors.

25. Turn the ignition switch to ON (II).

26. Do the adaptive front lighting control unit learning procedure (see page 22-265).

27. Turn the steering wheel to the center position, and hold it in that position.

28. Measure the voltage between adaptive front lighting control unit 40P connector terminals No. 33 (+) and No. 31 (−).

ADAPTIVE FRONT LIGHTING CONTROL UNIT 40P CONNECTOR

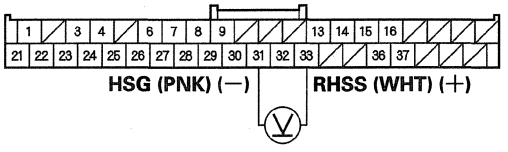

Wire side of female terminals

Is there about 0.8− 1.5 V?

YES—Replace the adaptive front lighting control unit, and do the adaptive front lighting learning procedure (see page 22-265). ■

NO—Faulty hall sensor, replace the right adaptive front lighting gearbox (see page 22-274). ■

29. Turn the ignition switch to LOCK (0).

30. Disconnect the right adaptive front lighting gearbox 8P connector.

31. Test the right adaptive front lighting gearbox (see page 22-272).

Is the right adaptive front lighting gearbox OK?

YES—Go to step 32.

NO—Replace the right adaptive front lighting gearbox (see page 22-274). ■

32. Disconnect the adaptive front lighting control unit 40P connector.

33. Connect right adaptive front lighting gearbox 8P connector terminals No. 3, No. 4, No. 7, and No. 8 to body ground with jumper wires.

RIGHT ADAPTIVE FRONT LIGHTING GEARBOX 8P CONNECTOR

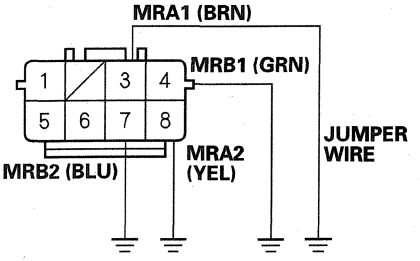

Wire side of female terminals

34. Check for continuity between body ground and adaptive front lighting control unit 40P connector terminals No. 6, No. 8, No. 26, and No. 28 individually.

ADAPTIVE FRONT LIGHTING CONTROL UNIT 40P CONNECTOR

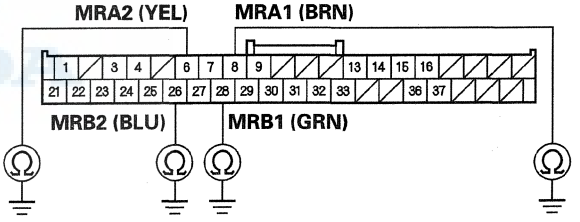

Wire side of female terminals

Is there continuity?

YES—Replace the adaptive front lighting control unit, and do the adaptive front lighting learning procedure (see page 22-265). ■

NO—Repair an open in the wire. ■

Adaptive Front Lighting System

Adaptive Front Lighting Control Unit Learning Procedure Index

Do the appropriate adaptive front lighting control unit learning procedure when any of the related parts of the adaptive front lighting system are removed or replaced.

- When the adaptive front lighting control unit is replaced (a brand new adaptive front lighting control unit is installed) (see page 22-265).
- When adaptive front lighting control unit is replaced (a known-good adaptive front lighting control unit is installed) (see page 22-265).
- When the suspension stroke sensor is replaced (see page 22-266).
- When the suspension stroke sensor is removed, or the suspension stroke sensor is disassembled (see page 22-266).
- When a headlight is replaced (see page 22-266).
- When an adaptive front lighting gearbox is replaced (see page 22-266).
- When the AFS OFF switch is replaced (see page 22-267).
- When the combination light switch is replaced (see page 22-267).
- When an HID unit is replaced (see page 22-267).
- When an HID bulb is replaced (see page 22-267).

Adaptive Front Lighting Control Unit Learning Procedure

When the adaptive front lighting control unit is replaced (a brand new adaptive front lighting control unit is installed)

NOTE: If the AFS indicator is blinking, check the DTCs.

1. Remove all baggage from the vehicle.
2. Turn the ignition switch to ON (II).
3. Make sure the AFS indicator does not turn off. (If the AFS indicator turns off, the adaptive front lighting control unit is not a new or previously learned unit.)
4. Turn the ignition switch to LOCK (0) and then back to ON (II).
5. Within 5 seconds, turn the headlight switch ON/OFF or to passing three times.
6. Make sure the AFS indicator blinks in a 1 second cycle. (If the indicator does not blink, return to step 2.)
7. Turn the headlights ON, and make sure the headlights move while the AFS control unit runs the initialization function (see page 22-239).
8. Turn the steering wheel to the left or to the right 90 degrees or more from the center position.
9. Test-drive, with only the driver in the vehicle, in a straight line for 98.4 feet (30 m) at least 16 mph (25 km/h).
10. Make sure the AFS indicator turns off. (If the indicator does not turn off, repeat the steps 8 and 9.)
11. Adjust the headlights (see page 22-219).

When the adaptive front lighting control unit is replaced (a known-good adaptive front lighting control unit is installed)

NOTE: If the AFS indicator is blinking, check the DTCs.

1. Remove all baggage from the vehicle.
2. Connect the HDS to the data link connector, and short the SCS line.
3. Turn the ignition switch to ON (II).
4. Make sure the AFS indicator turns off after 2 seconds. (If the AFS indicator does not turn off, the adaptive front lighting control unit must be brand new.)
5. Turn the ignition switch to LOCK (0) and then back to ON (II).
6. Within 5 seconds, turn the headlight switch ON/OFF or to passing three times.
7. Turn the headlights ON, and make sure the headlights move while the AFS control unit runs the initialization function (see page 22-239). (If the headlights do not move, return to step 2.)
8. Release the SCS short command with the HDS.
9. Turn the steering wheel to the left or to the right 90 degrees or more from the center position.
10. With the HDS communicating with the BODY ELECTRICAL, test-drive, with only the driver in the vehicle, in a straight line for 98.4 feet (30 m) at least 16 mph (25 km/h).
11. Select AFS from the HDS, and enter DATA LIST.
12. Make sure the STEERING CENTER LEARN information in the DATA LIST is finished. (If the learn is not completed, repeat the steps 9 and 10.)
13. Adjust the headlights (see page 22-219).

Adaptive Front Lighting Control Unit Learning Procedure (cont'd)

When the suspension stroke sensor is removed or replaced, or the suspension stroke sensor link is disassembled

NOTE: If the AFS indicator is blinking, check the DTCs.

1. Remove all baggage from the vehicle.
2. Connect the HDS to the data link connector, and short the SCS line.
3. Turn the ignition switch to ON (II).
4. Make sure the AFS indicator turns off after 2 seconds. (If the AFS indicator stays on and does not turn off, the AFS control unit has been replaced with a brand new control unit.)
5. Turn the ignition switch to LOCK (0) and then back to ON (II).
6. Within 5 seconds, turn the headlight switch ON/OFF or to passing three times.
7. Turn the headlights ON, and make sure the headlights move while the AFS control unit runs the initialization function (see page 22-239). (If the headlights do not move, return to step 2.)
8. Release the SCS short command with the HDS.
9. Adjust the headlights (see page 22-219).

When the headlight is replaced, or when the adaptive front lighting gearbox is replaced

1. Remove all baggage from the vehicle.
2. Turn the ignition switch to ON (II).
3. Turn the headlights ON.
4. Connect the HDS to the data link connector.
5. Select AFS from the HDS, and enter FUNCTION TEST.
6. Make sure both headlights swing about 20 degrees left and right by the forced operation with the HDS.
7. Make sure both headlights move up and down by the forced operation with the HDS.
8. Check the combination light switch.
9. Adjust the headlights (see page 22-219).

When the AFS OFF switch or combination light switch is replaced

NOTE: If the AFS indicator is blinking, check the DTCs.

1. Turn the ignition switch to ON (II).
2. Turn the headlights ON.
3. Turn the AFS OFF switch OFF, and make sure the AFS indicator comes on. (If the AFS indicator does not come on, check for an open in the wire or poor connections at the switch connector.)

When an HID unit or HID bulb is replaced

1. Turn the combination light switch ON, and make sure the headlights come on.
2. If a headlight was removed, adjust the headlights (see page 22-219).

Control Unit Input Test

1. Remove the driver's dashboard undercover (see page 20-100), and the driver's dashboard lower cover (see page 20-100).

2. Disconnect the 40P connector (A) from the adaptive front lighting control unit (B).

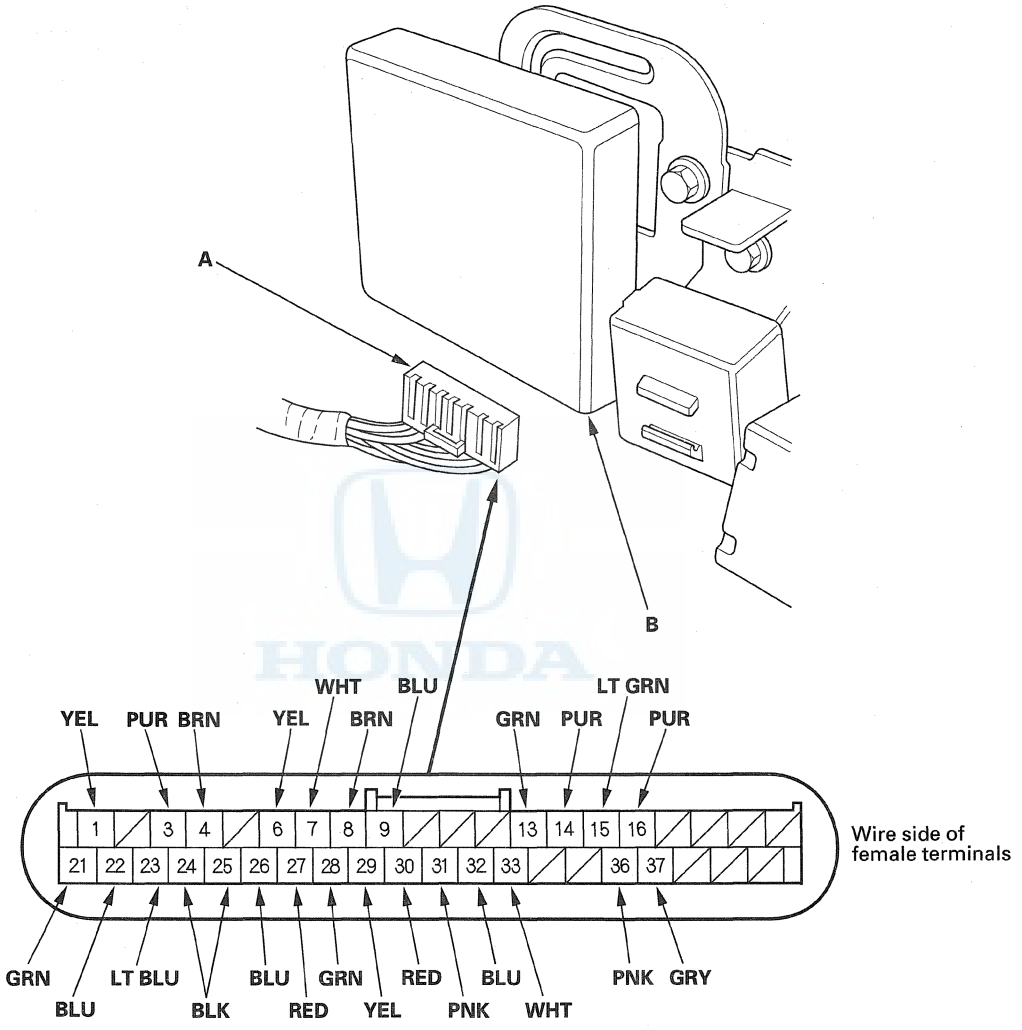

3. Inspect the connector and socket terminals to be sure they are all making good contact.

   - If the terminals are bent, loose, or corroded, repair them as necessary and recheck the system.
   - If the terminals look OK, go to step 4.

4. With the connector still disconnected, do these input tests at the following connector.

   - If any test indicates a problem, find and correct the cause, then recheck the system.
   - If all the input tests prove OK, go to step 5.

Cavity	Wire	Test condition	Test: Desired result	Possible cause if desired result is not obtained
23 37	LT BLU GRY	Under all conditions	Measure resistance between terminals No. 37 and No. 23: There should be at least 3.5—6.5 Ω.	• Faulty suspension stroke sensor • An open in the wire
14 23	PUR LT BLU	Under all conditions	Measure resistance between terminals No. 14 and No. 23: There should be at least 0.5—4.5 Ω.	• Faulty suspension stroke sensor • An open in the wire
16 23	PUR LT BLU	Under all conditions	Measure resistance between terminals No. 16 and No. 23: There should be at least 0.5—4.5 Ω.	• Faulty suspension stroke sensor • An open in the wire
6 8	YEL BRN	Under all conditions	Measure resistance between terminals No. 6 and No. 8: There should be at least 7.8—9.4 Ω.	• Faulty right adaptive front lighting gearbox • An open in the wire
7 9	WHT BLU	Under all conditions	Measure resistance between terminals No. 7 and No. 9: There should be at least 7.8—9.4 Ω.	• Faulty left adaptive front lighting gearbox • An open in the wire
26 28	BLU GRN	Under all conditions	Measure resistance between terminals No. 26 and No. 28: There should be at least 7.8—9.4 Ω.	• Faulty right adaptive front lighting gearbox • An open in the wire
27 29	RED YEL	Under all conditions	Measure resistance between terminals No. 27 and No. 29: There should be at least 7.8—9.4 Ω.	• Faulty left adaptive front lighting gearbox • An open in the wire

(cont'd)

Control Unit Input Test (cont'd)

5. Reconnect the 40P connector to the adaptive front lighting control unit, and do these input tests at the following connector.

   - If any test indicates a problem, find and correct the cause, then recheck the system.
   - If all the input tests prove OK, the control unit must be faulty; replace it.

Cavity	Wire	Test condition	Test: Desired result	Possible cause if desired result is not obtained
24 25	BLK	Ignition switch ON (II)	Measure the voltage to ground: There should be less than 0.2 V.	• Poor ground (G401) • An open in the wire
21	GRN	Ignition switch ON (II)	Measure the voltage to ground: There should be battery voltage.	• Blown No. 11 (15 A) fuse in the driver's under-dash fuse/relay box • An open in the wire
22	BLU	Ignition switch ON (II)	Measure the voltage to ground: There should be battery voltage.	• Blown No. 29 (7.5 A) fuse in the driver's under-dash fuse/relay box • An open in the wire
1 30	YEL RED	Ignition switch ON (II) and headlight switch ON	Measure the voltage between terminals No. 1 (+) and No. 30 (−): There should be battery voltage.	• Faulty headlight leveling motor • An open in the wire
36 30	PNK RED	Ignition switch ON (II) and headlight switch ON	Measure the voltage between terminals No. 36 (+) and No. 30 (−): There should be at least 2—12 V (voltage should vary depending on leveling motor position).	• Faulty headlight leveling motor • An open in the wire
13 31	GRN PNK	Ignition switch ON (II) and headlight switch ON	Measure the voltage between terminals No. 13 (+) and No. 31 (−): There should be at least 0.5—4.5 V.	• Faulty left adaptive front lighting gearbox • An open in the wire
33 31	WHT PNK	Ignition switch ON (II) and headlight switch ON	Measure the voltage between terminals No. 33 (+) and No. 31 (−): There should be at least 0.5—4.5 V.	• Faulty right adaptive front lighting gearbox • An open in the wire
32 31	BLU PNK	Ignition switch ON (II) and headlight switch ON	Measure the voltage between terminals No. 32 (+) and No. 31 (−): There should be at least 4.5—5.5 V.	• Faulty adaptive front lighting gearbox • An open in the wire
3	PUR	AFS OFF switch pushed	Measure the voltage to ground: There should be less than 0.2 V.	• Poor ground (G501) • Faulty AFS OFF switch • An open in the wire
		AFS OFF switch released	Measure the voltage to ground: There should be at least 5 V.	• Faulty AFS OFF switch • A short to ground in the wire

Headlight Leveling Motor Test

NOTE: Before testing, check the No. 11 (7.5 A) and No. 29 (7.5 A) fuses in the driver's under-dash fuse/relay box.

1. Disconnect the 3P connector (A) from the headlight leveling motor (B).

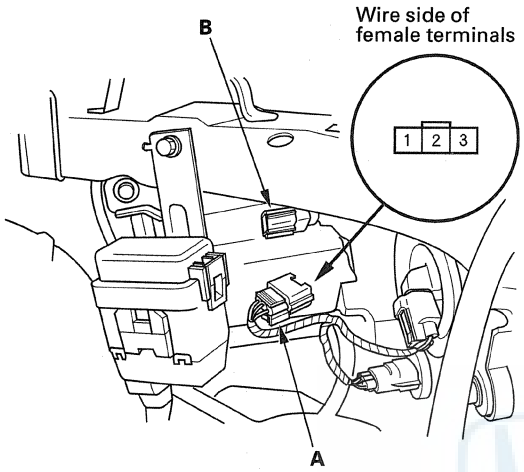

2. Check for continuity between headlight leveling motor 3P connector terminal No. 3 and body ground. There should be continuity.

   - If there is continuity, go to step 3.
   - If there is no continuity, check for:
     - Faulty adaptive front lighting control unit.
     - An open in the wire between the adaptive front lighting control unit and the headlight leveling motor.
     - Poor ground (G 401).

3. Turn the ignition switch to ON (II).

4. Measure the voltage between headlight leveling motor 3P connector terminal No. 1 and body ground. There should be battery voltage.

   - If there is battery voltage, go to step 5.
   - If there is no voltage, check for:
     - Faulty adaptive front lighting control unit.
     - An open in the wire between the adaptive front lighting control unit and the headlight leveling motor.

5. Turn the headlight switch ON.

6. Measure the voltage between headlight leveling motor 3P connector terminal No. 2 and body ground. There should be about 3—13 V.

   NOTE: The voltage will vary depending on the vehicle position.

   - If there is battery voltage, replace the headlight leveling motor (see page 22-276).
   - If there is no voltage, check for:
     - Faulty adaptive front lighting control unit.
     - An open in the wire between the adaptive front lighting control unit and the headlight leveling motor.

AFS OFF Switch Test/Replacement

1. Remove the instrument fascia (see page 20-99).
2. Disconnect the 6P connector (A) from the AFS OFF switch (B).

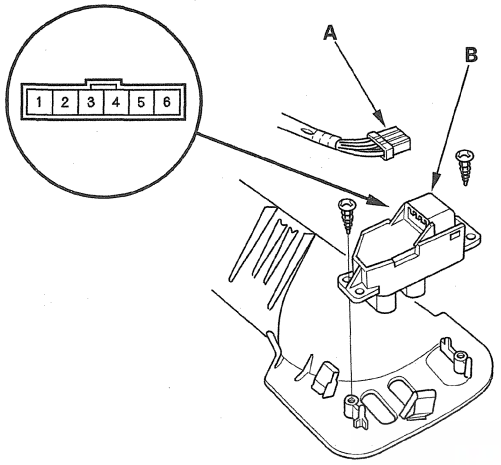

3. Check for continuity between terminals in each switch position according to the table.

Terminal / Position	5	6	1		2
ON	○	○	⊕	▶	⊖
OFF					

4. If the continuity is not as specified, remove the screws and replace the switch.
5. After replacement, do the adaptive front lighting control unit learning procedure (see page 22-265).

Adaptive Front Lighting Gearbox Test

1. Disconnect the adaptive front lighting gearbox 8P connector (A) from the headlight.

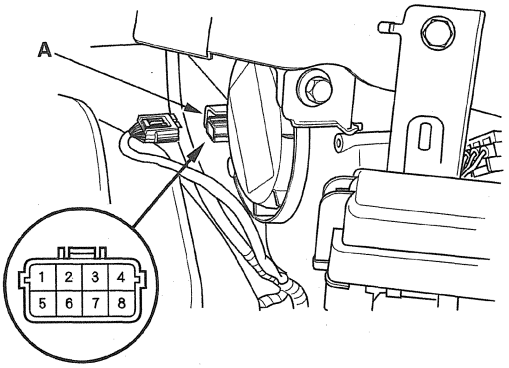

2. Measure the resistance between adaptive front lighting gearbox 8P connector terminals No. 4 and No. 7, and between terminals No. 3 and No. 8. There should be about 4.5—5.5 Ω.
3. If the resistance is not as specified, replace the adaptive front lighting gearbox.
4. After replacement, do the adaptive front lighting control unit learning procedure (see page 22-265).

Suspension Stroke Sensor Test

1. Remove the suspension stroke sensor (see page 22-273).
2. Measure the resistance between suspension stroke sensor 3P connector terminals No. 1 and No. 3. There should be about 3.5—6.5 kΩ.
3. Measure the resistance between suspension stroke sensor 3P connector terminals No. 2 and No. 3 with the linkage (A) moved. There should be about 0.5—4.5 kΩ.

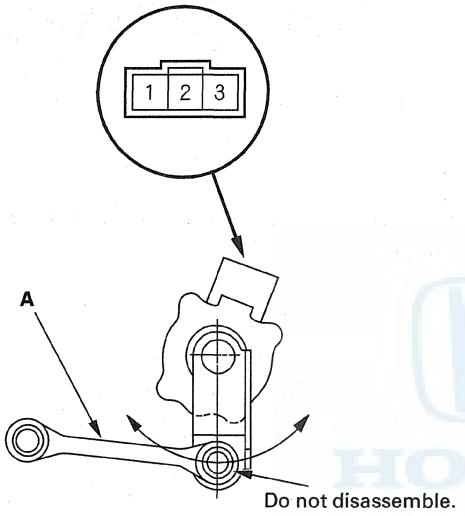

4. If the resistance is not as specified, replace the suspension stroke sensor (see page 22-273).
5. After replacement, do the adaptive front lighting control unit learning procedure (see page 22-265).

Suspension Stroke Sensor Replacement

1. Lift the vehicle, and support it with safety stands (see page 1-8).
2. Disconnect the 3P connector (A) from the suspension stroke sensor (B).

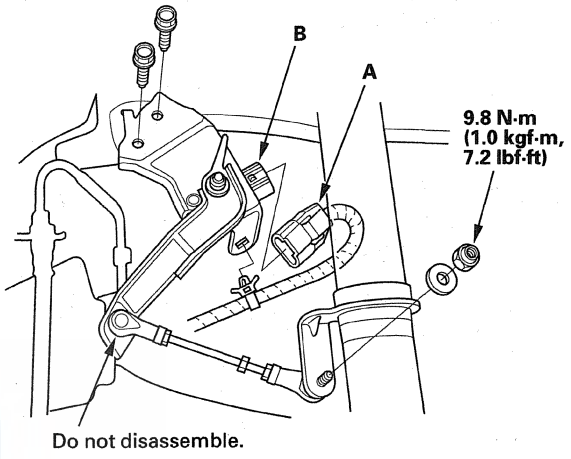

3. Remove the bolts and nut, then remove the suspension stroke sensor.
4. Install the sensor in the reverse order of removal.
5. After replacement, do the adaptive front lighting control unit learning procedure (see page 22-265).

Adaptive Front Lighting Gearbox Replacement

Removal

1. Remove the headlight assembly (see page 22-220).
2. Remove the HID unit from the headlight (see page 22-223).
3. Turn the cover (A) 45 ° counterclockwise to remove it from the headlight housing.

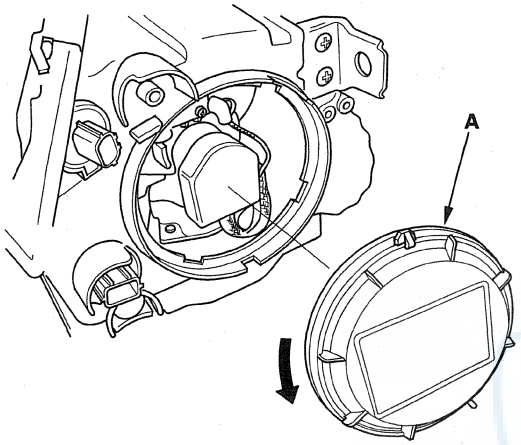

4. Remove the screws and the adaptive front lighting gearbox cover (A) and gasket (B).

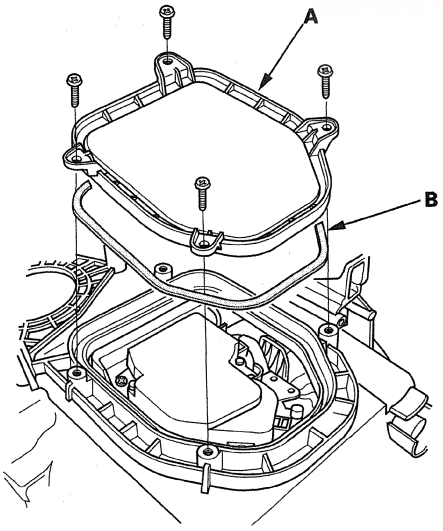

5. Turn the adaptive front lighting gearbox connector (A) 45 ° clockwise, and push the connector into the headlight housing (B).

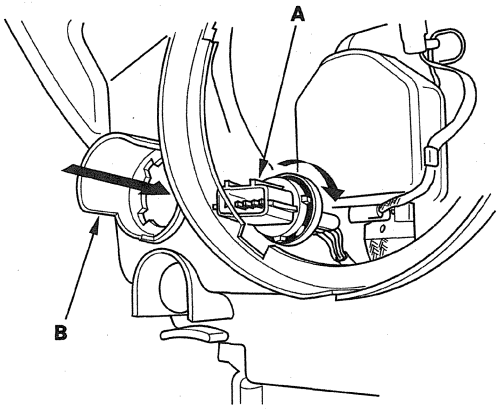

6. Remove the three screws and the adaptive front lighting gearbox (A).

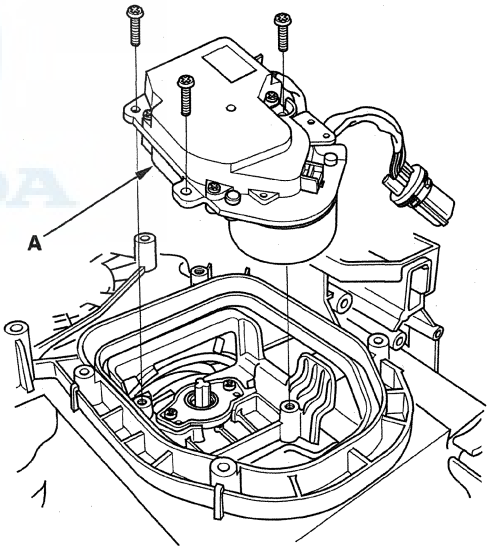

Installation

1. Align the gearbox cam (A) with the mark (B) on the gearbox, then install the gearbox in the reverse order of removal.

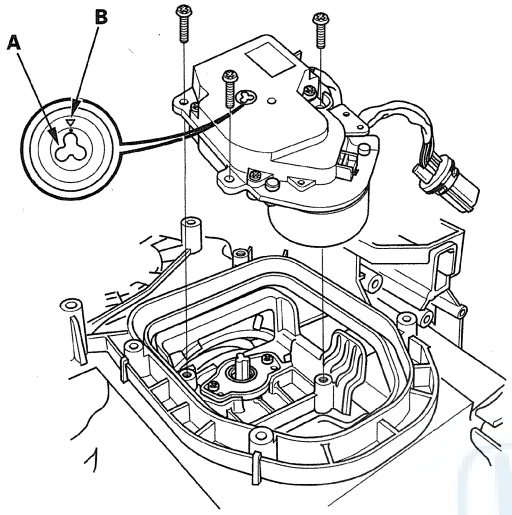

2. Route the adaptive front lighting gearbox connector (A) through the hole (B) in the reverse order of removal.

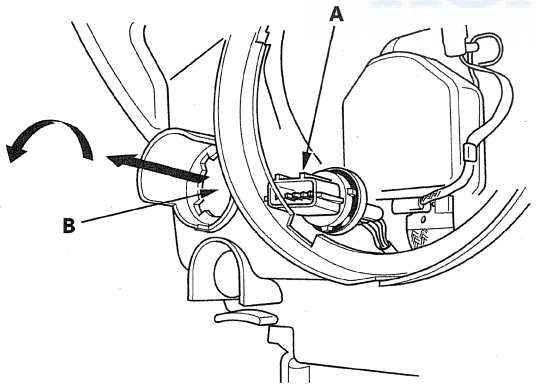

3. Install the adaptive front lighting gearbox cover (A).

   NOTE: Check the gasket (B) of the gearbox cover, and replace it if it is destroyed or compressed.

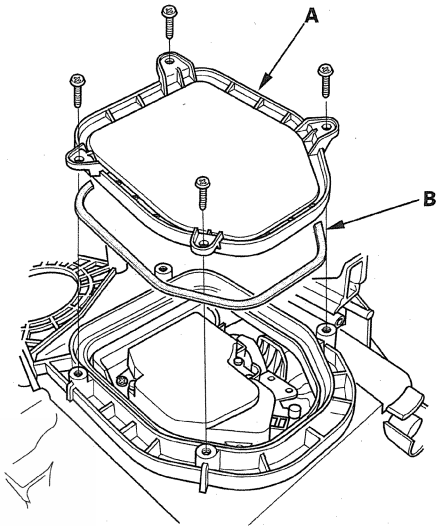

4. After installation, do the adaptive front lighting control unit learning procedure (see page 22-265).

Headlight Leveling Motor Replacement

1. Remove the headlight assembly (see page 22-220).
2. Turn the HID light cover 45 ° counterclockwise to remove it from the headlight housing (see step 4 on page 22-221).
3. Turn the headlight leveling motor (A) 45 ° clockwise.

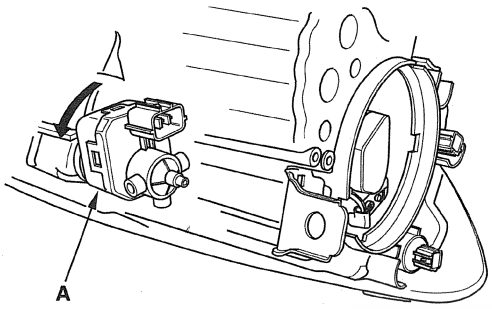

4. Pull the headlight reflector (A) slightly, and remove the headlight leveling motor (B).

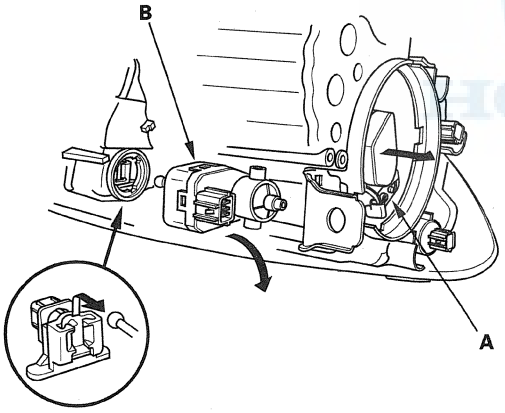

5. Install the parts in the reverse order of removal.
6. After installation, do the adaptive front lighting control unit learning procedure (see page 22-265).

Headlight Leveling System

Component Location Index

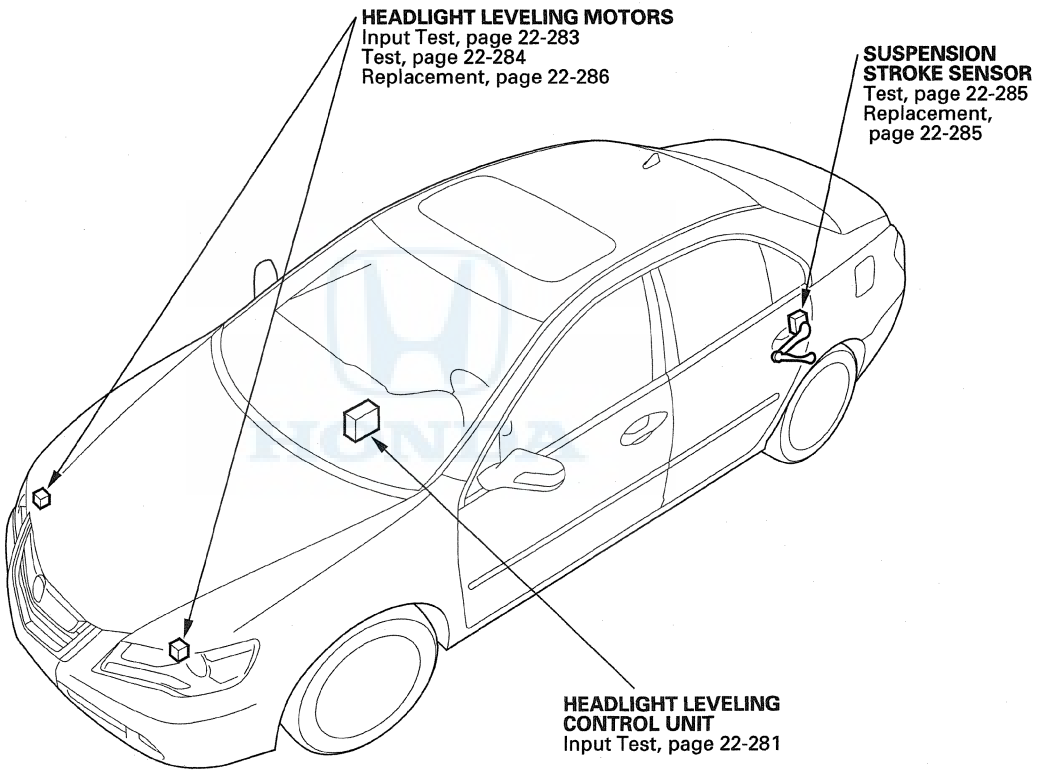

Headlight Leveling System

System Description

Headlight Leveling System

The headlight leveling system is composed of the headlight leveling control unit, the suspension stroke sensor, and the left and right headlight leveling motors.
The system uses the suspension stroke sensor to monitor the vehicle ride height. The ride height is monitored every 3 minutes while the vehicle is running with the headlight switch ON, and 8 seconds after the vehicles stops with the ignition and headlight switches ON.

If the control unit detects a ride height change, the control unit controls the headlight leveling motors to adjust the headlight vertical position.

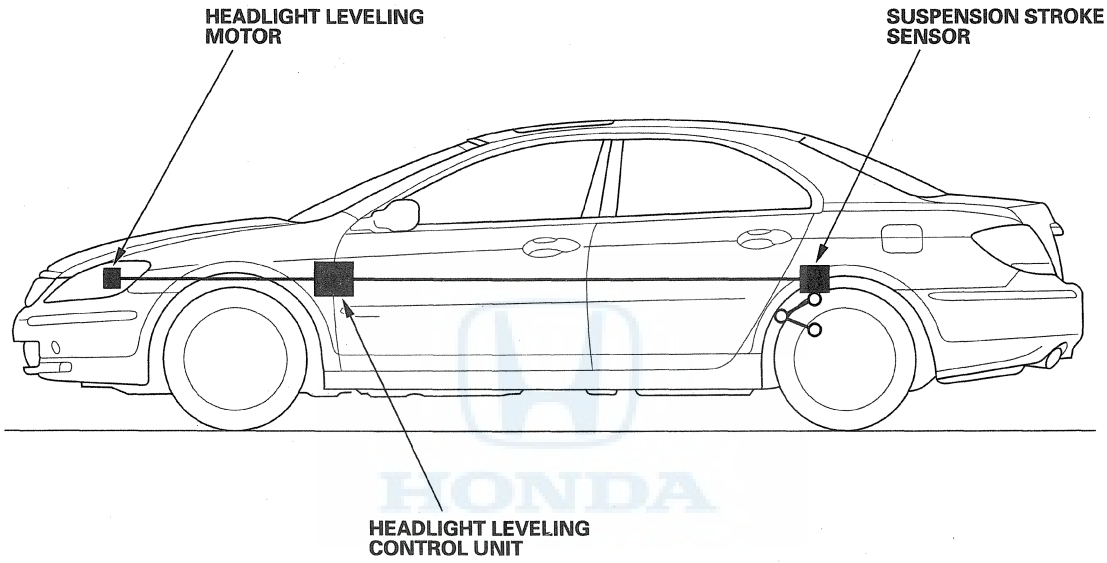

Suspension Stroke Sensor

The suspension stroke sensor detects the vehicle posture and send a voltage signal (about 0.4—4.6 V) to the headlight leveling control unit.

Headlight Leveling Control Unit

The headlight leveling control unit is located under the driver's side of the dashboard. The headlight leveling control unit uses the voltage signals it receives from the suspension stroke sensor to determine the voltage signal (about 2—11 V) it sends to control the left and right leveling motors.

Headlight Leveling Motors

The headlight leveling motors are located behind both headlights, and they adjust the headlights vertically based upon the voltage signals (about 2—11 V) they receive from the headlight leveling control unit.

Headlight Initial Position Learning Procedure

Do the headlight initial position learning when any of the related parts of the headlight leveling system shown are removed or replaced:

- Suspension stroke sensor removed or replaced
- Headlight leveling control unit replaced

Learning Procedure

Before learning the headlights:

- Park the vehicle on a level surface.
- Make sure the tire pressures are correct.

1. Turn the ignition switch to LOCK (0).
2. Remove all of the baggage from the vehicle.
3. Slide the front seats fully backward.
4. Have the driver or someone who weighs the same (about 165 lb (75 kg)) sit in the driver's seat.
5. Connect the HDS to the data link connector.
6. Turn the ignition switch to ON (II).
7. Short the SCS line with the HDS.
8. Turn the ignition switch to LOCK (0), and then back to ON (II).
9. Within 5 seconds, turn the headlights (low beam) or passing switch ON and OFF three times repeatedly, and leave them on.
   - If the headlights move down (about 2 in at 10 feet), then return to the original position, the initial position learning is complete.
   - If the headlights don't move, go to step 1 and repeat the procedure.
10. Turn the ignition switch to LOCK (0), and disconnect the HDS from the data link connector.
11. Adjust the headlight aim to conform with the applicable requirements.

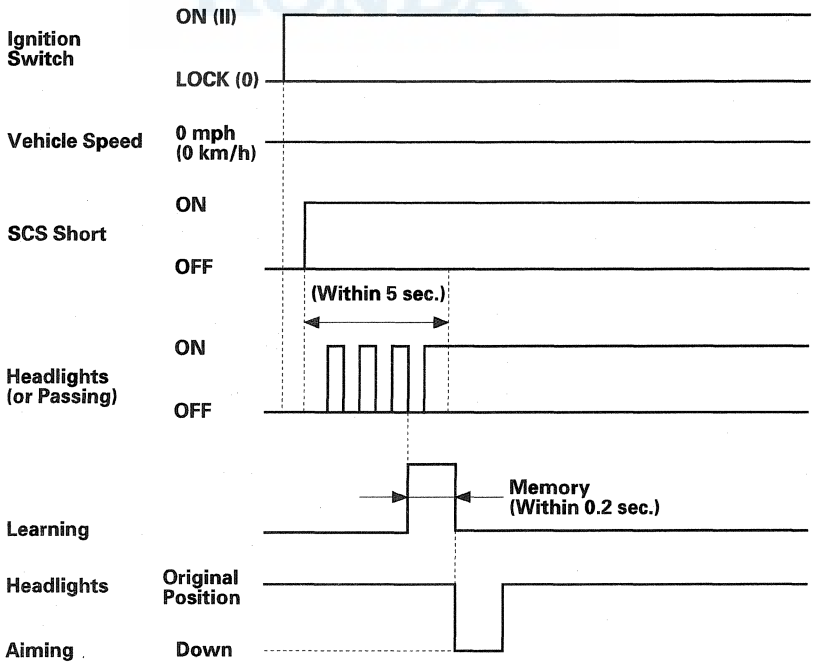

Headlight Leveling System

Circuit Diagram

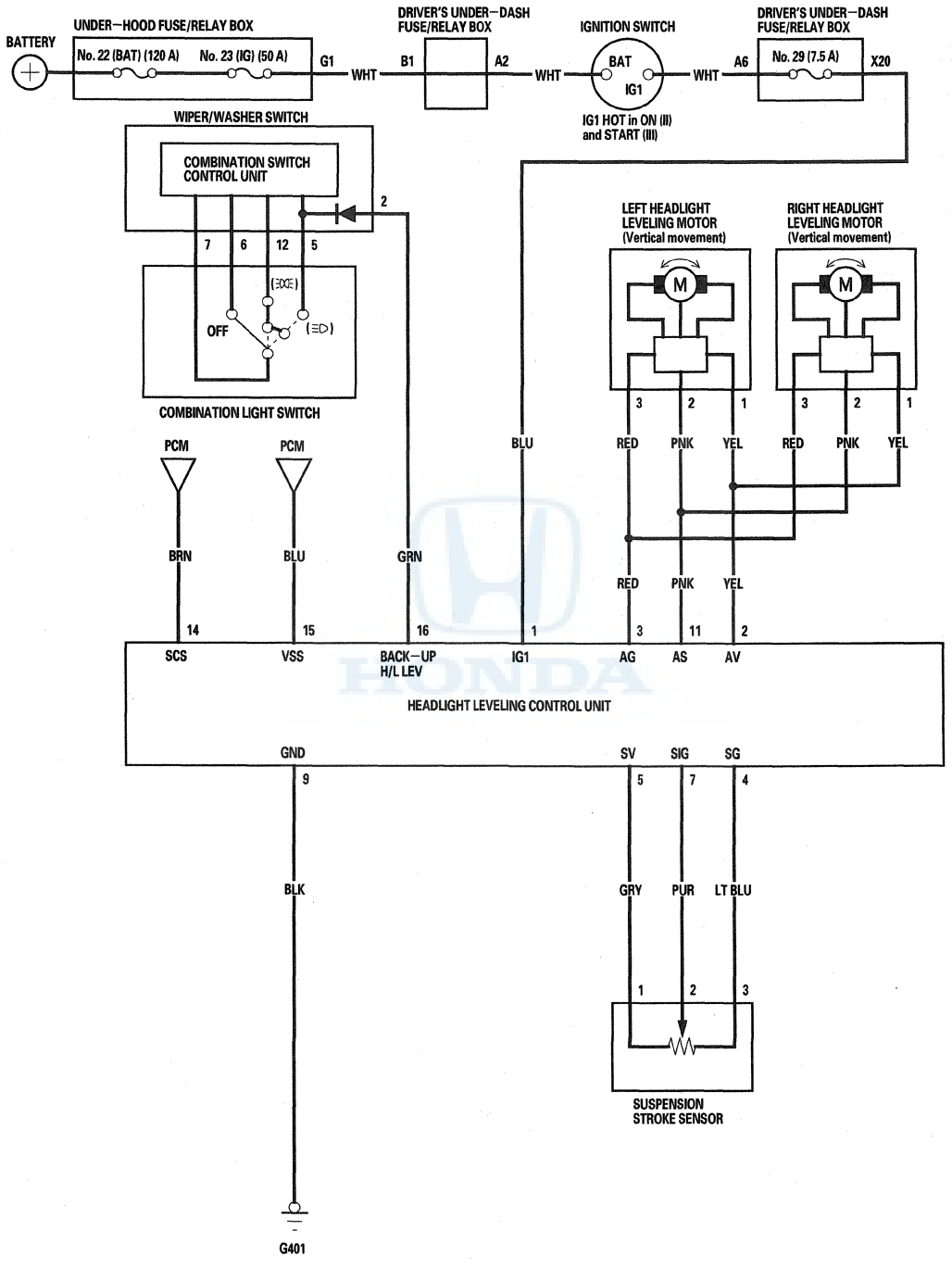

Headlight Leveling Control Unit Input Test

1. Turn the ignition switch to LOCK (0).
2. Remove the driver's dashboard undercover (see page 20-100), and the driver's dashboard lower cover (see page 20-100).
3. Disconnect the 16P connector (A) from the headlight leveling control unit (B).

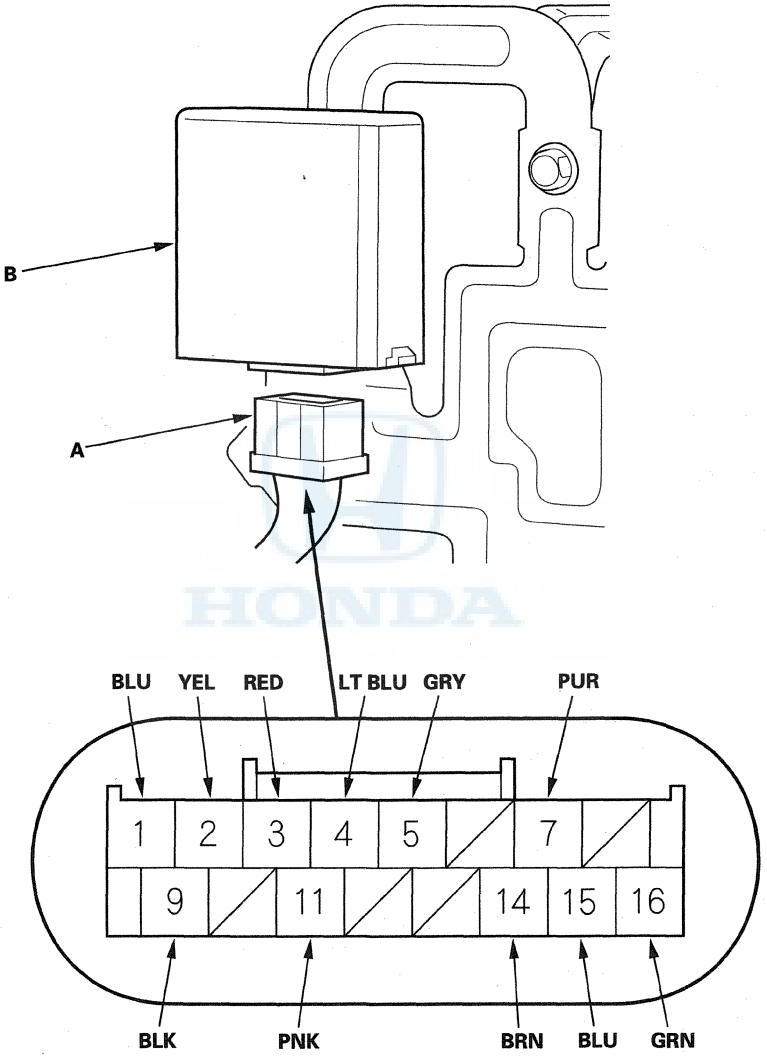

Wire side of female terminals

4. Inspect the connector and socket terminals to be sure they are all making good contact.
   - If the terminals are bent, loose or corroded, repair them as necessary, and recheck the system.
   - If the terminals are OK, go to step 5.

(cont'd)

Headlight Leveling Control Unit Input Test (cont'd)

5. With the connector still disconnected, do these input tests at the following connector.

   - If any test indicates a problem, find and correct the cause, then recheck the system.
   - If all the input tests prove OK, go to step 6.

Cavity	Wire	Test condition	Test: Desired result	Possible cause if desired result is not obtained
15	BLU	Ignition switch ON (II), raise the vehicle, make sure it is securely supported, and rotate one of the front wheels slowly with the other wheel blocked.	Measure the voltage between terminals No. 15 (+) and No. 9 (−): There should be a pulse of at least 0—5 V showing repeatedly.	• Faulty PCM • An open in the wire • A short to ground in the wire
16	GRN	Under all conditions	Check for continuity between terminal No. 16 and combination switch control unit 8P connector terminal No. 2: There should be continuity.	An open in the wire

6. Reconnect the connector to the control unit, and do these input tests at the following connector.

   - If any tests indicates a problem, find and correct the cause, then recheck the system.
   - If all the input tests prove OK, replace the headlight leveling control unit.

Cavity	Wire	Test condition	Test: Desired result	Possible cause if desired result is not obtained
1	BLU	Ignition switch ON (II)	Measure the voltage to ground: There should be battery voltage.	• Blown No. 29 (7.5 A) fuse in the driver's under-dash fuse /relay box • An open in the wire
9	BLK	Under all conditions	Measure the voltage to ground: There should be less than 0.2 V.	• Poor ground (G401) • An open in the wire
4	LT BLU	Under all conditions	Measure the voltage to ground: There should be less than 0.2 V.	• Poor ground (G401) • An open in the wire
2 3	YEL RED	Ignition switch ON (II), headlight ON	Measure the voltage between terminals No. 2 and No. 3: There should be battery voltage.	• Faulty headlight leveling motor • An open in the wire
11 3	PNK RED	Ignition switch ON (II), headlight ON	Measure the voltage between terminals No. 11 and No. 3: There should be at least 2 V to 12 V.	• Faulty headlight leveling motor • An open in the wire
5 7 4	GRY PUR LT BLU	Under all conditions	• Measure the voltage between the terminals No. 5 (+) and No. 4 (−): There should be at least 5 V. • Measure the voltage between the terminals No. 7 (+) and No. 4 (−): There should be at least 0.5 V to 4.5 V.	• Faulty suspension stroke sensor • An open in the wire

7. After replacing the control unit, do the headlight initial position learning procedure (see page 22-279).

Headlight Leveling Motor Input Test

1. Turn the ignition switch to LOCK (0).

2. Disconnect the 3P connector (A) from the headlight leveling motor (B).

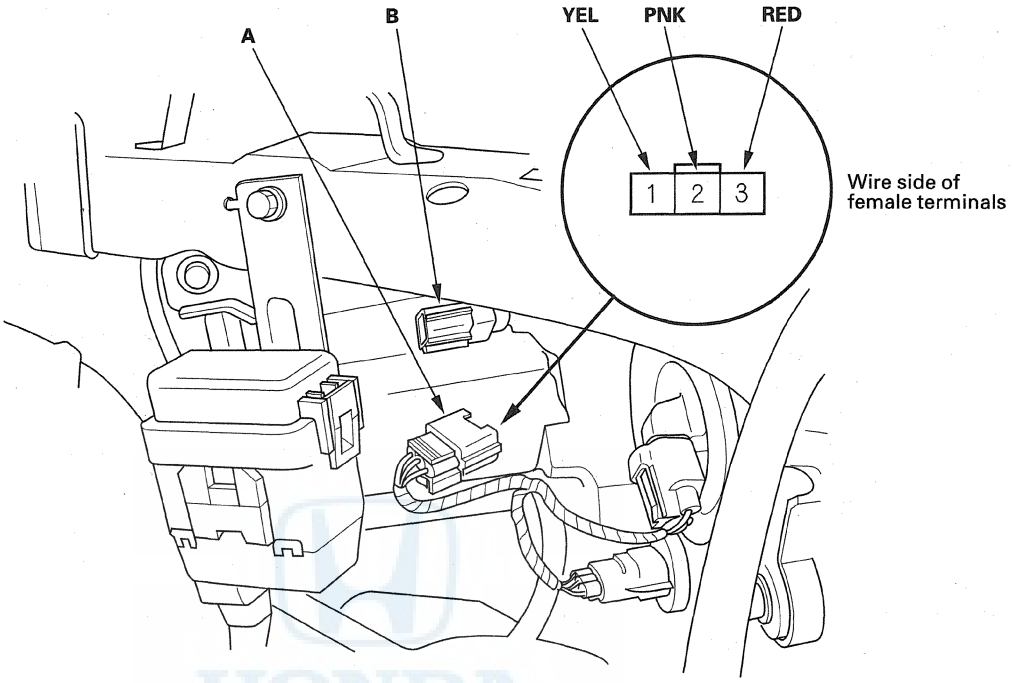

3. Inspect the connector and socket terminals to be sure they are all making good contact.

   - If the terminals are bent, loose, or corroded, repair them as necessary, and recheck the system.
   - If the terminals are OK, go to step 4.

4. Reconnect the connector to the headlight leveling motor, and do these input tests at the following connector.

   - If any tests indicate a problem, find and correct the cause, then recheck the system.
   - If all the input tests prove OK, replace the headlight leveling motor (see page 22-286).

Cavity	Wire	Test condition	Test: Desired result	Possible cause if desired result is not obtained
1	YEL	Ignition switch ON (II)	Measure the voltage to ground: There should be battery voltage.	• Faulty headlight leveling control unit • An open in the wire
2	PNK	Ignition switch ON (II), headlight switch ON	Measure the voltage to ground: There should be at least 2—12 V. NOTE: Depending on the headlight leveling position.	• Poor ground (G401) • Faulty headlight leveling control unit • An open in the wire
3	RED	Ignition switch ON (II)	Measure the voltage to ground: There should be less than 0.2 V.	• Faulty headlight leveling control unit • An open in the wire

Headlight Leveling Motor Test

NOTE: Before testing, check the No. 11 (7.5 A) and No. 29 (7.5 A) fuses in the driver's under-dash fuse/relay box.

1. Disconnect the 3P connector (A) from the headlight leveling motor (B).

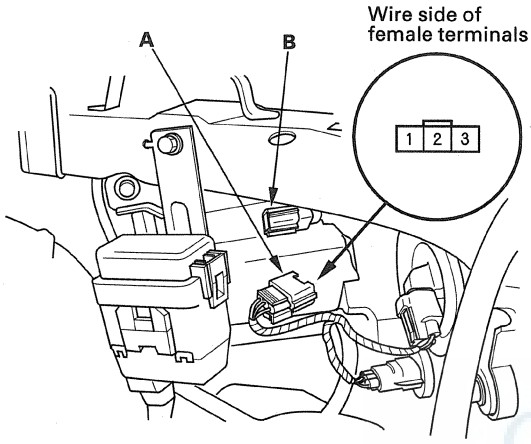

2. Check for continuity between headlight leveling motor 3P connector terminal No. 3 and body ground. There should be continuity.

   - If there is continuity, go to step 3.
   - If there is no continuity, check for:
     - Faulty headlight leveling control unit.
     - An open in the wire between the adaptive front lighting control unit and headlight leveling motor.
     - Poor ground (G 401).

3. Turn the ignition switch to ON (II).

4. Measure the voltage between headlight leveling motor 3P connector terminal No. 1 and body ground. There should be battery voltage.

   - If there is battery voltage, go to step 5.
   - If there is no voltage, check for:
     - Faulty headlight leveling control unit.
     - An open in the wire between the adaptive front lighting control unit and headlight leveling motor.

5. Turn the headlight switch ON.

6. Measure the voltage between headlight leveling motor 3P connector terminal No. 2 and body ground. There should be about 3—13 V.

   NOTE: The voltage will vary depending on the vehicle position.

   - If there is battery voltage, replace the headlight leveling motor (see page 22-286).
   - If there is no voltage, check for:
     - Faulty headlight leveling control unit.
     - An open in the wire between the adaptive front lighting control unit and headlight leveling motor.

Suspension Stroke Sensor Test

1. Remove the suspension stroke sensor (see page 22-285).
2. Measure the resistance between suspension stroke sensor 3P connector terminals No. 1 and No. 3. There should be about 3.5—6.5 kΩ.
3. Measure the resistance between suspension stroke sensor 3P connector terminals No. 2 and No. 3 with the linkage (A) moved. There should be about 0.5—4.5 kΩ.

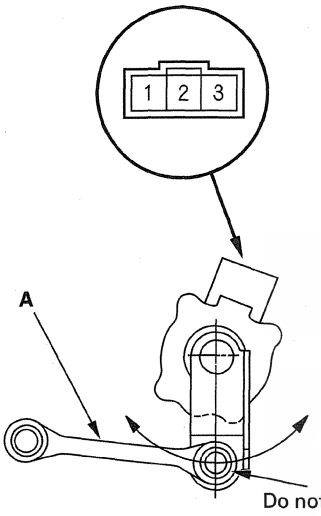

4. If the resistance is not as specified, replace the suspension stroke sensor (see page 22-285).

Suspension Stroke Sensor Replacement

1. Raise the vehicle on a lift (see page 1-8).
2. Disconnect the 3P connector (A) from the suspension stroke sensor (B).

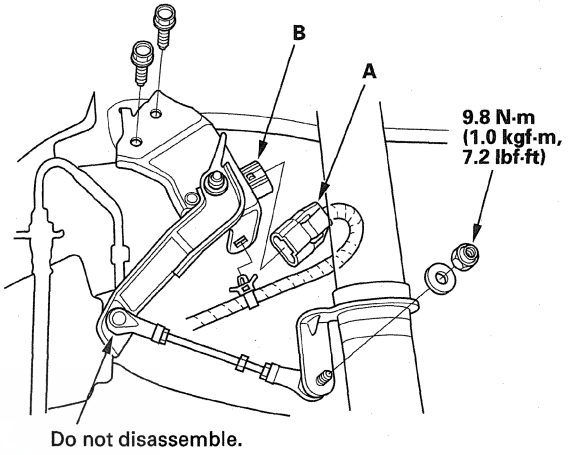

3. Remove the bolts and nut, then remove the suspension stroke sensor.
4. Install the sensor in the reverse order of removal.
5. After replacement, do the headlight initial position learning procedure (see page 22-279).

Headlight Leveling Motor Replacement

1. Remove the headlight assembly (see page 22-220).
2. Turn the HID light cover 45 ° counterclockwise to remove it from the headlight housing (see step 4 on page 22-221).
3. Turn the headlight leveling motor (A) 45 ° clockwise.

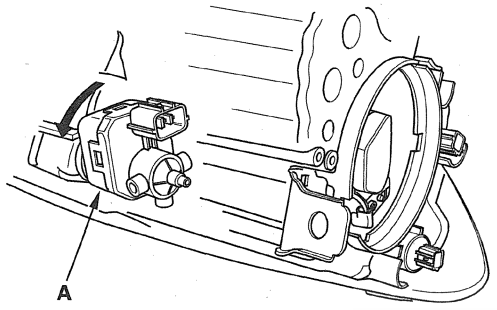

4. Pull the headlight reflector (A) slightly, and remove the headlight leveling motor (B).

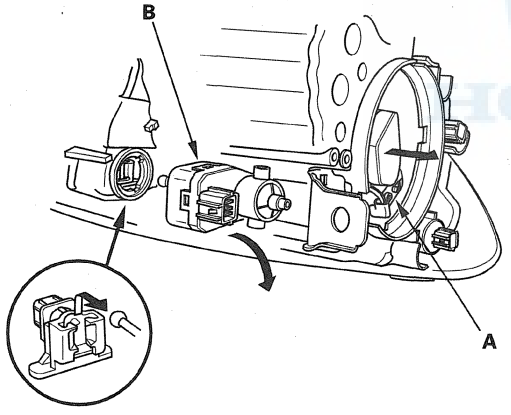

5. Install the parts in the reverse order of removal.
6. After installation, do the headlight initial position learning procedure (see page 22-279).

Interior Lights

Component Location Index

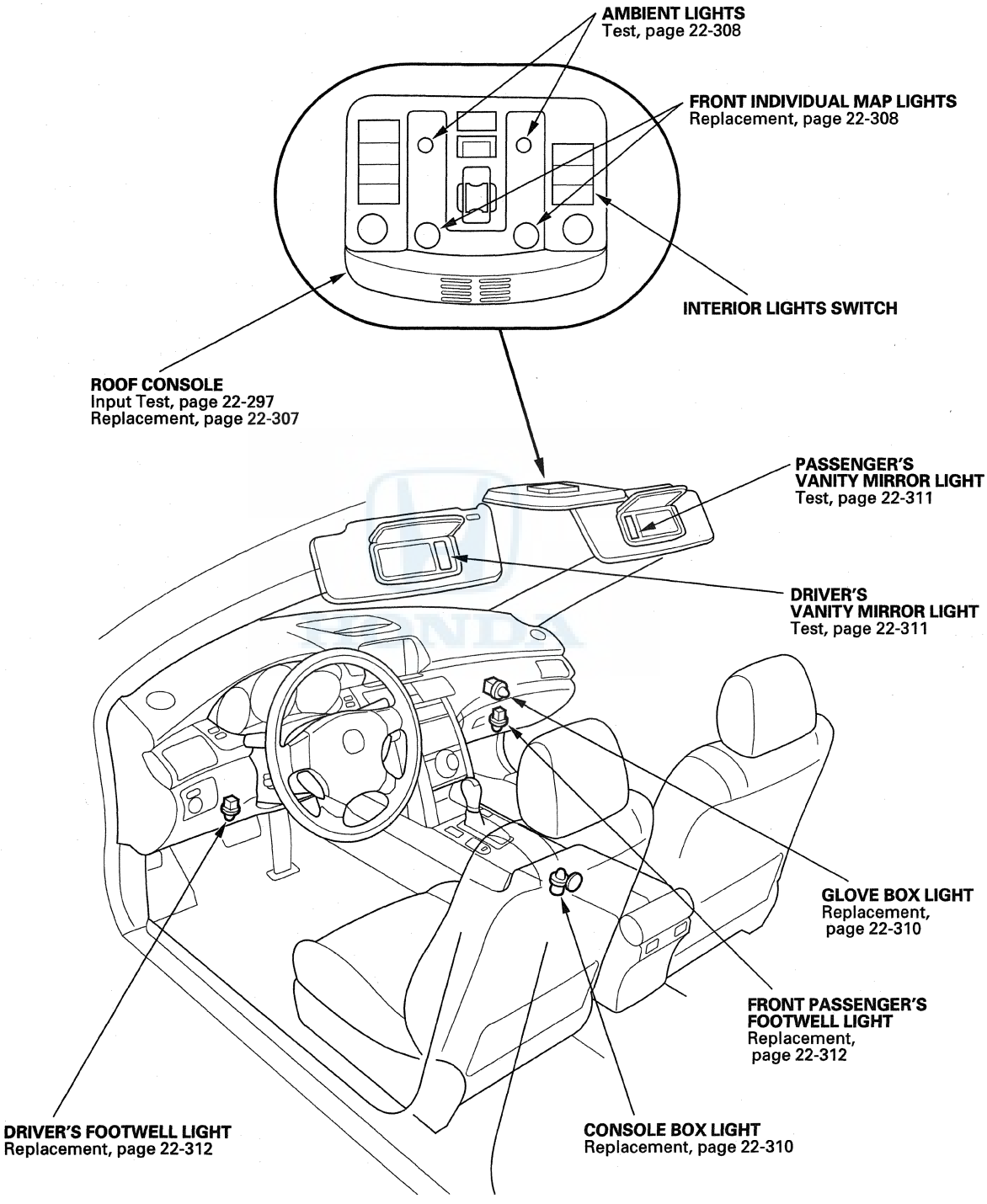

(cont'd)

Component Location Index (cont'd)

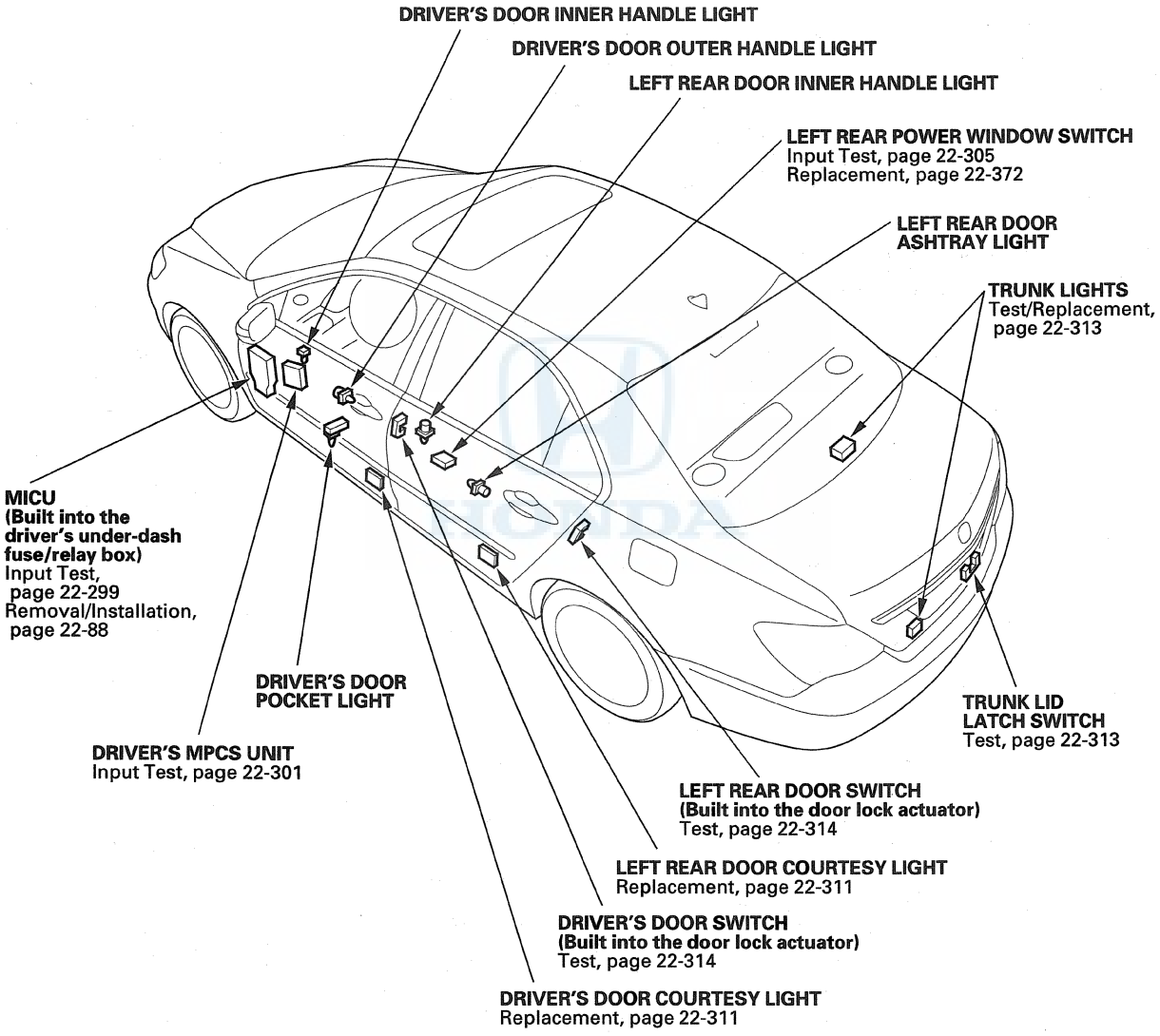

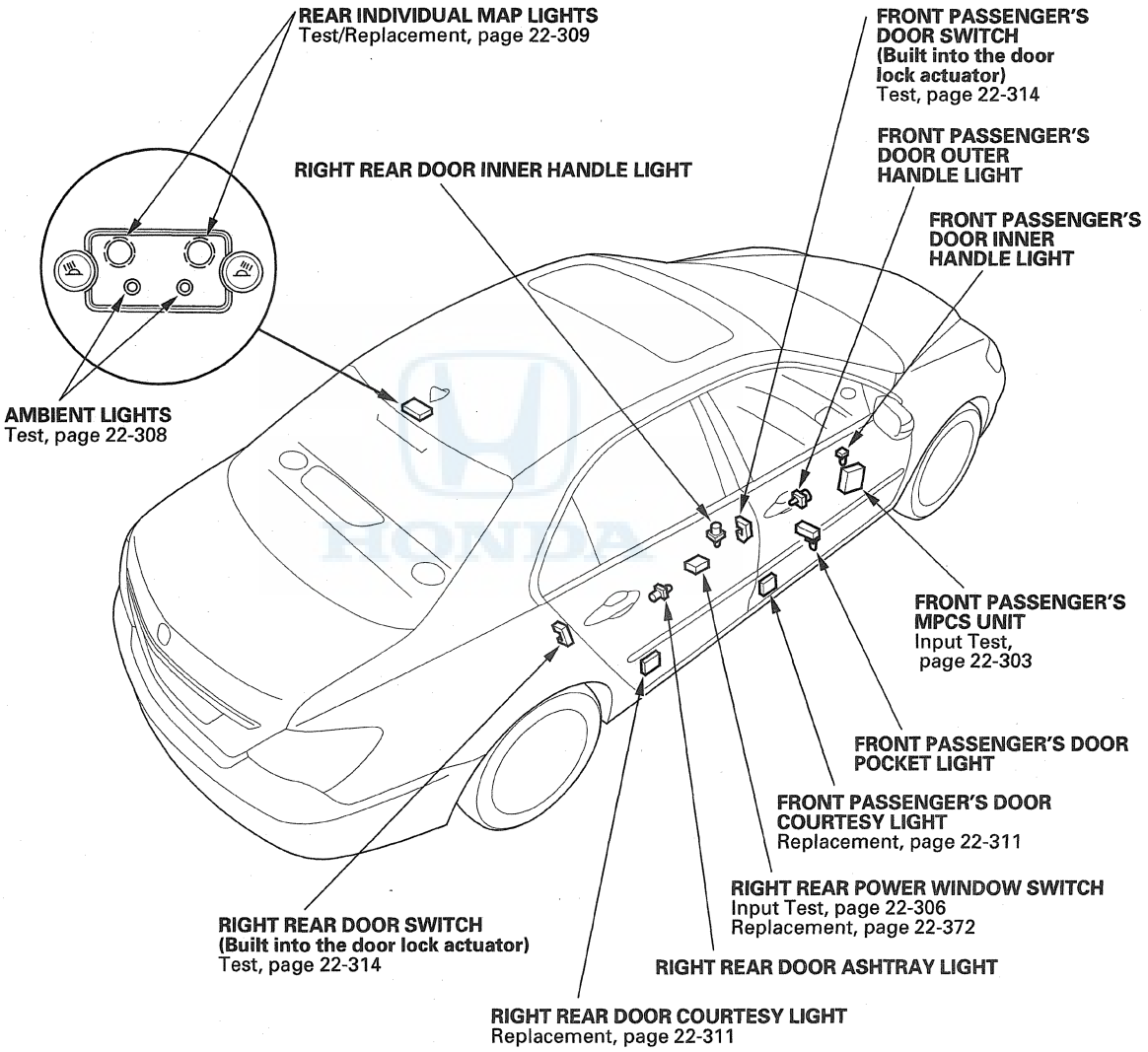
REAR INDIVIDUAL MAP LIGHTS
Test/Replacement, page 22-309
FRONT PASSENGER'S DOOR SWITCH (Built into the door lock actuator)
Test, page 22-314
FRONT PASSENGER'S DOOR OUTER HANDLE LIGHT
RIGHT REAR DOOR INNER HANDLE LIGHT
FRONT PASSENGER'S DOOR INNER HANDLE LIGHT
AMBIENT LIGHTS
Test, page 22-308
FRONT PASSENGER'S MPCS UNIT
Input Test, page 22-303
FRONT PASSENGER'S DOOR POCKET LIGHT
FRONT PASSENGER'S DOOR COURTESY LIGHT
Replacement, page 22-311
RIGHT REAR POWER WINDOW SWITCH
Input Test, page 22-306
Replacement, page 22-372
RIGHT REAR DOOR SWITCH (Built into the door lock actuator)
Test, page 22-314
RIGHT REAR DOOR ASHTRAY LIGHT
RIGHT REAR DOOR COURTESY LIGHT
Replacement, page 22-311

Interior Lights

Circuit Diagram

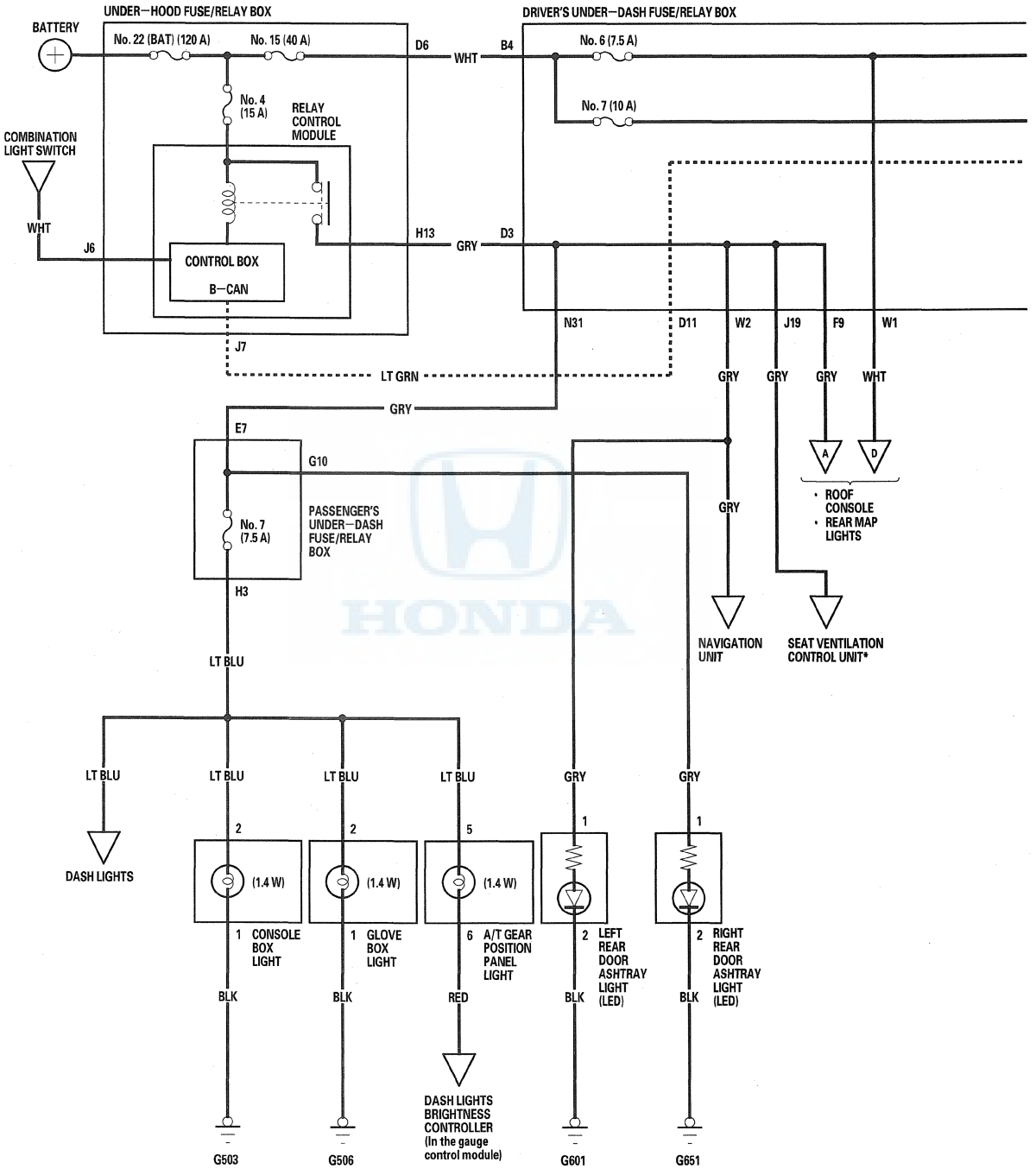

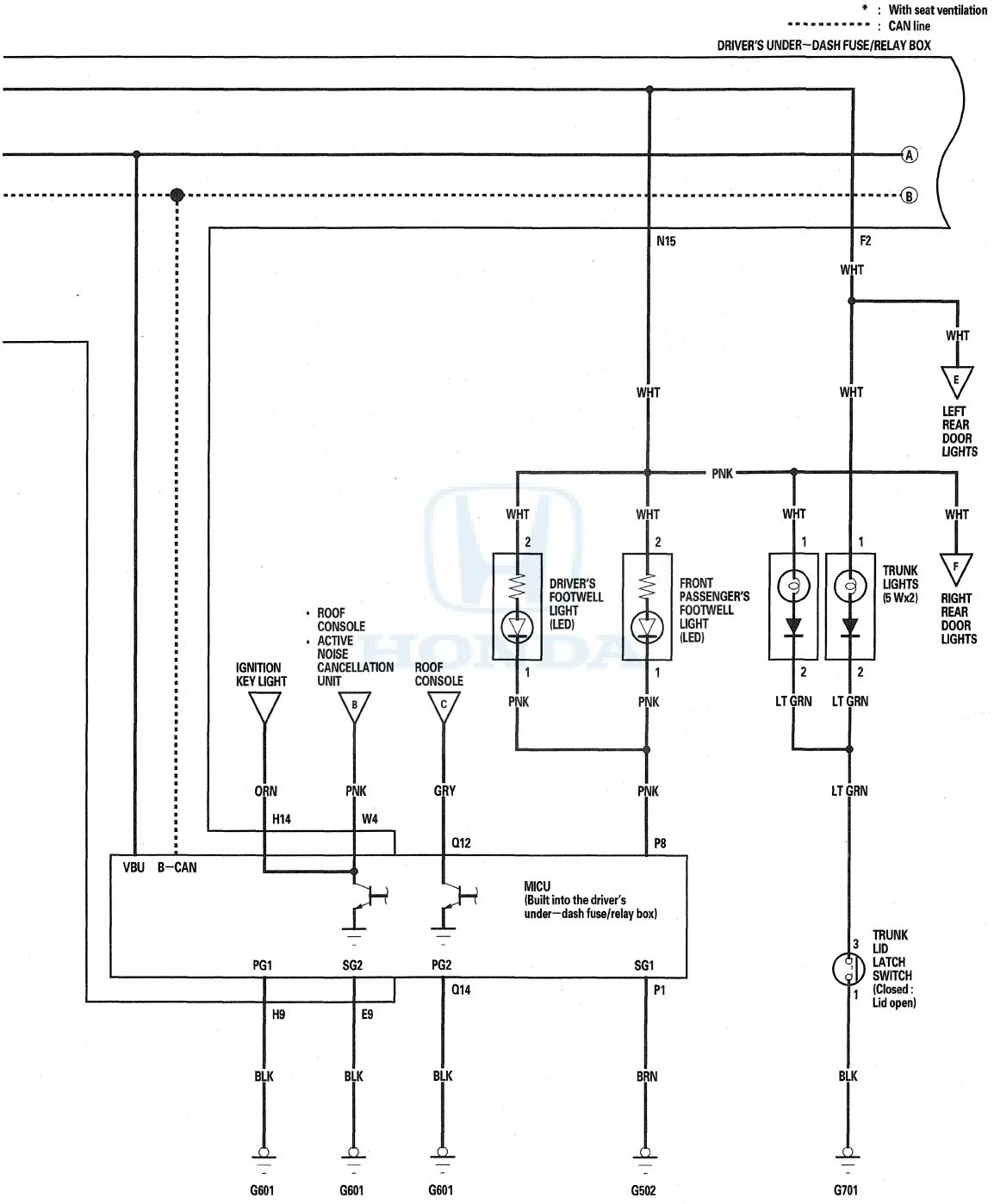
* : With seat ventilation
: CAN line
DRIVER'S UNDER-DASH FUSE/RELAY BOX
A
B
N15
F2
WHT
WHT
WHT
WHT
E
LEFT REAR DOOR LIGHTS
PNK
WHT
WHT
WHT
WHT
F
RIGHT REAR DOOR LIGHTS
DRIVER'S FOOTWELL LIGHT (LED)
FRONT PASSENGER'S FOOTWELL LIGHT (LED)
TRUNK LIGHTS (5 Wx2)
LT GRN
LT GRN
PNK
PNK
• ROOF CONSOLE
• ACTIVE NOISE CANCELLATION UNIT
IGNITION KEY LIGHT
ROOF CONSOLE
B
C
ORN
PNK
GRY
PNK
LT GRN
H14
W4
Q12
P8
VBU B-CAN
MICU
(Built into the driver's under-dash fuse/relay box)
TRUNK LID LATCH SWITCH (Closed : Lid open)
PG1
SG2
PG2
SG1
Q14
P1
H9
E9
BLK
BLK
BLK
BRN
BLK
G601
G601
G601
G502
G701

(cont'd)

Circuit Diagram (cont'd)

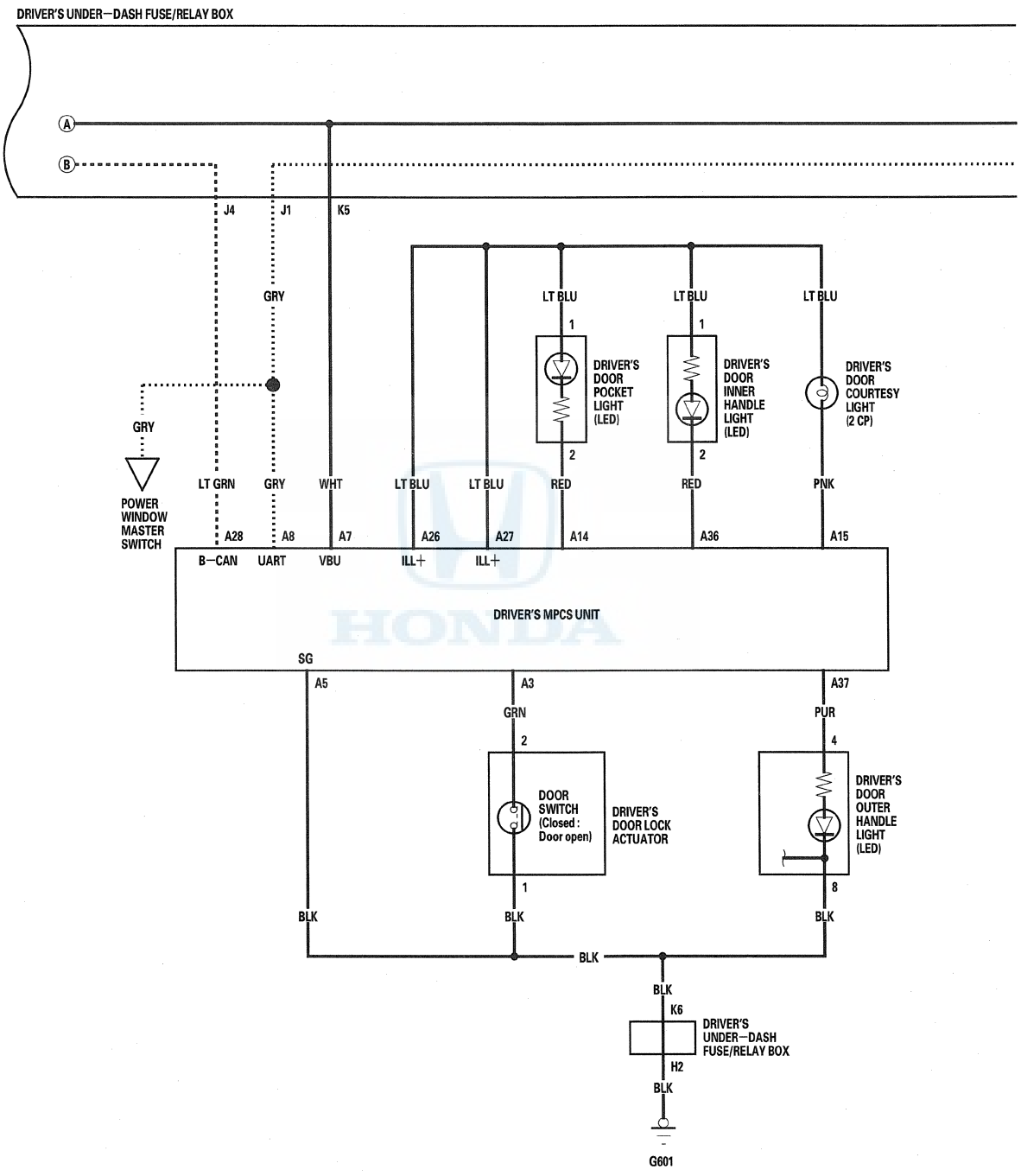

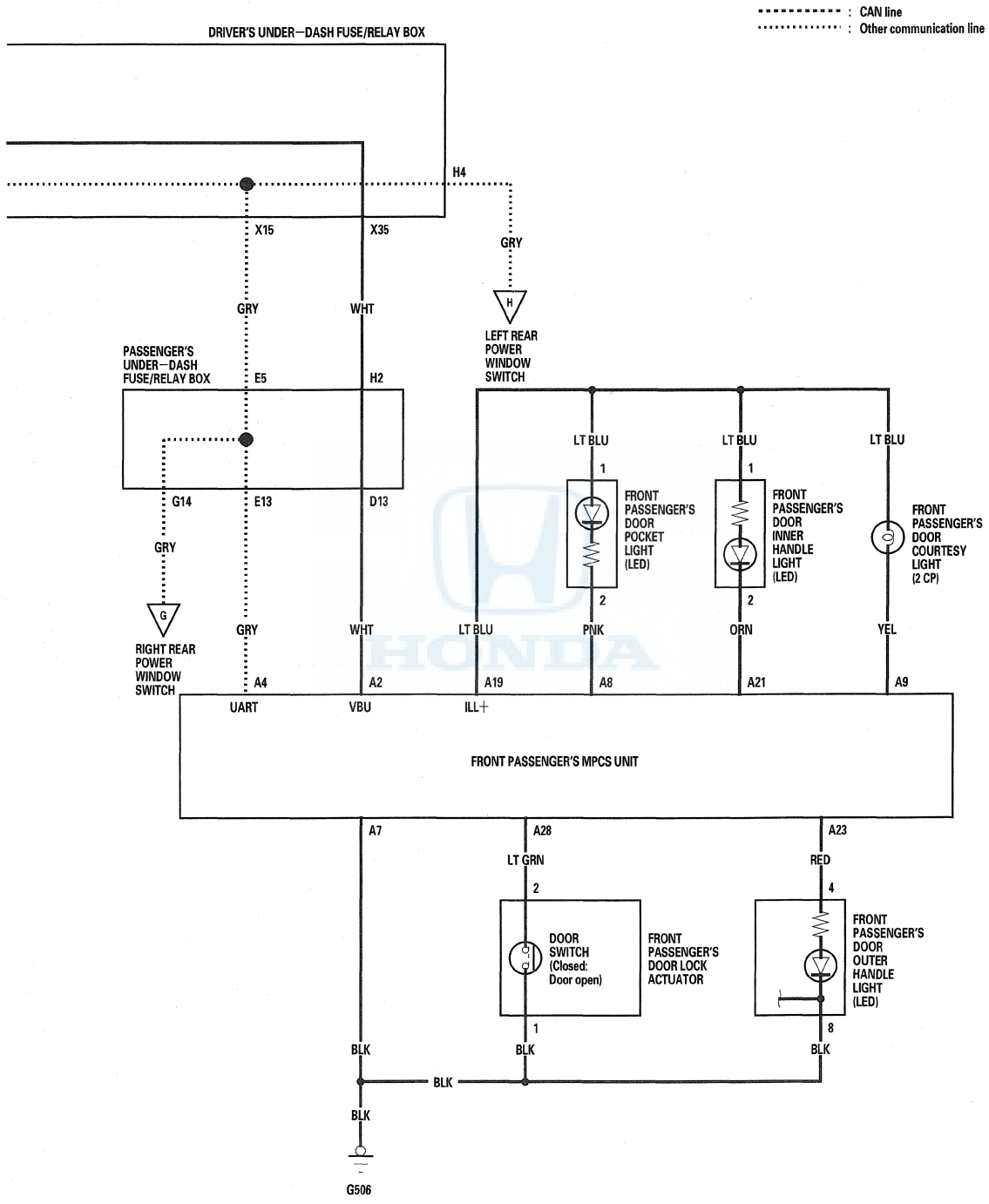
: CAN line
: Other communication line
DRIVER'S UNDER–DASH FUSE/RELAY BOX
H4
X15
X35
GRY
GRY
WHT
H
LEFT REAR POWER WINDOW SWITCH
PASSENGER'S UNDER–DASH FUSE/RELAY BOX
E5
H2
G14
E13
D13
GRY
G
RIGHT REAR POWER WINDOW SWITCH
GRY
WHT
LT BLU
PNK
ORN
YEL
A4
A2
A19
A8
A21
A9
UART
VBU
ILL+
LT BLU
1
2
FRONT PASSENGER'S DOOR POCKET LIGHT (LED)
LT BLU
1
2
FRONT PASSENGER'S DOOR INNER HANDLE LIGHT (LED)
LT BLU
FRONT PASSENGER'S DOOR COURTESY LIGHT (2 CP)
FRONT PASSENGER'S MPCS UNIT
A7
A28
A23
LT GRN
RED
2
4
DOOR SWITCH (Closed: Door open)
FRONT PASSENGER'S DOOR LOCK ACTUATOR
FRONT PASSENGER'S DOOR OUTER HANDLE LIGHT (LED)
1
8
BLK
BLK
BLK
BLK
BLK
G506

(cont'd)

Circuit Diagram (cont'd)

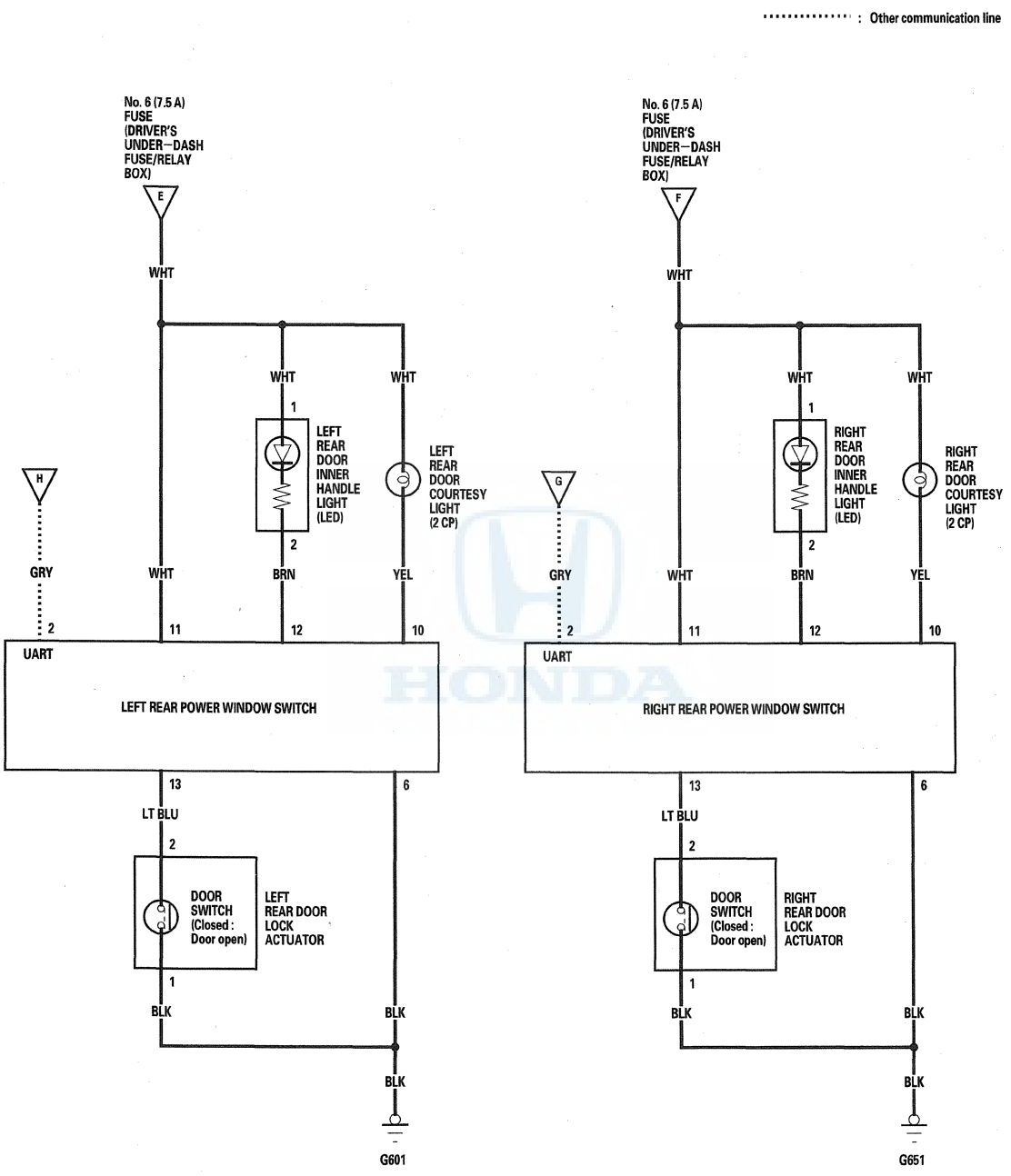

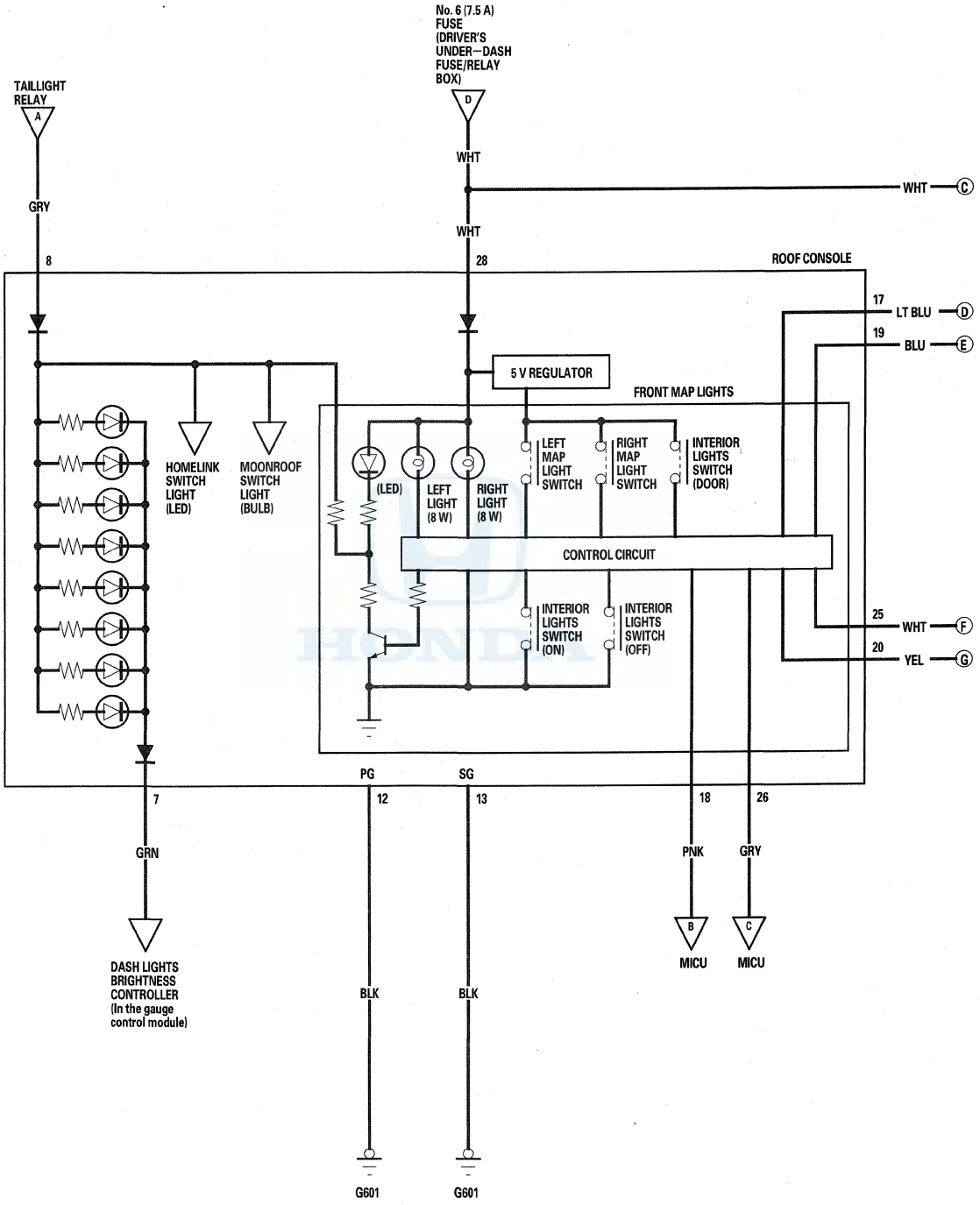
No. 6 (7.5 A)
FUSE
(DRIVER'S
UNDER-DASH
FUSE/RELAY
BOX)
D
TAILLIGHT
RELAY
A
WHT
WHT
GRY
WHT
C
8
28
ROOF CONSOLE
17
LT BLU
D
19
BLU
E
5 V REGULATOR
FRONT MAP LIGHTS
HOMELINK
SWITCH
LIGHT
(LED)
MOONROOF
SWITCH
LIGHT
(BULB)
(LED)
LEFT
LIGHT
(8 W)
RIGHT
LIGHT
(8 W)
LEFT
MAP
LIGHT
SWITCH
RIGHT
MAP
LIGHT
SWITCH
INTERIOR
LIGHTS
SWITCH
(DOOR)
CONTROL CIRCUIT
INTERIOR
LIGHTS
SWITCH
(ON)
INTERIOR
LIGHTS
SWITCH
(OFF)
25
WHT
F
20
YEL
G
PG
SG
7
12
13
18
26
GRN
PNK
GRY
B
C
MICU
MICU
DASH LIGHTS
BRIGHTNESS
CONTROLLER
(In the gauge
control module)
BLK
BLK
G601
G601

(cont'd)

Circuit Diagram (cont'd)

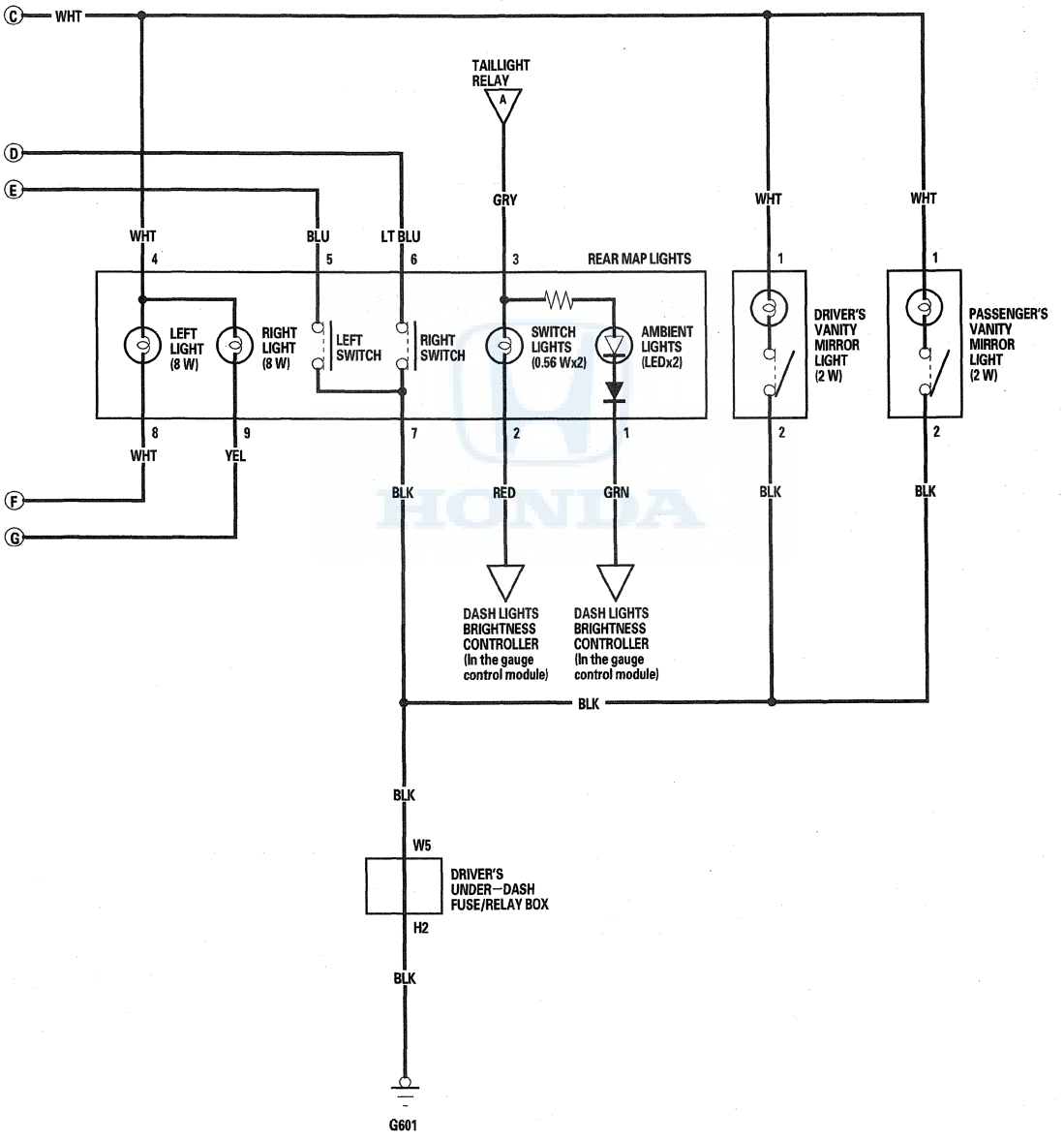

Roof Console Input Test

1. Turn the ignition switch to LOCK (0).
2. Remove the roof console (see page 22-307).
3. Disconnect the 28P connector (A) from the roof console (B).

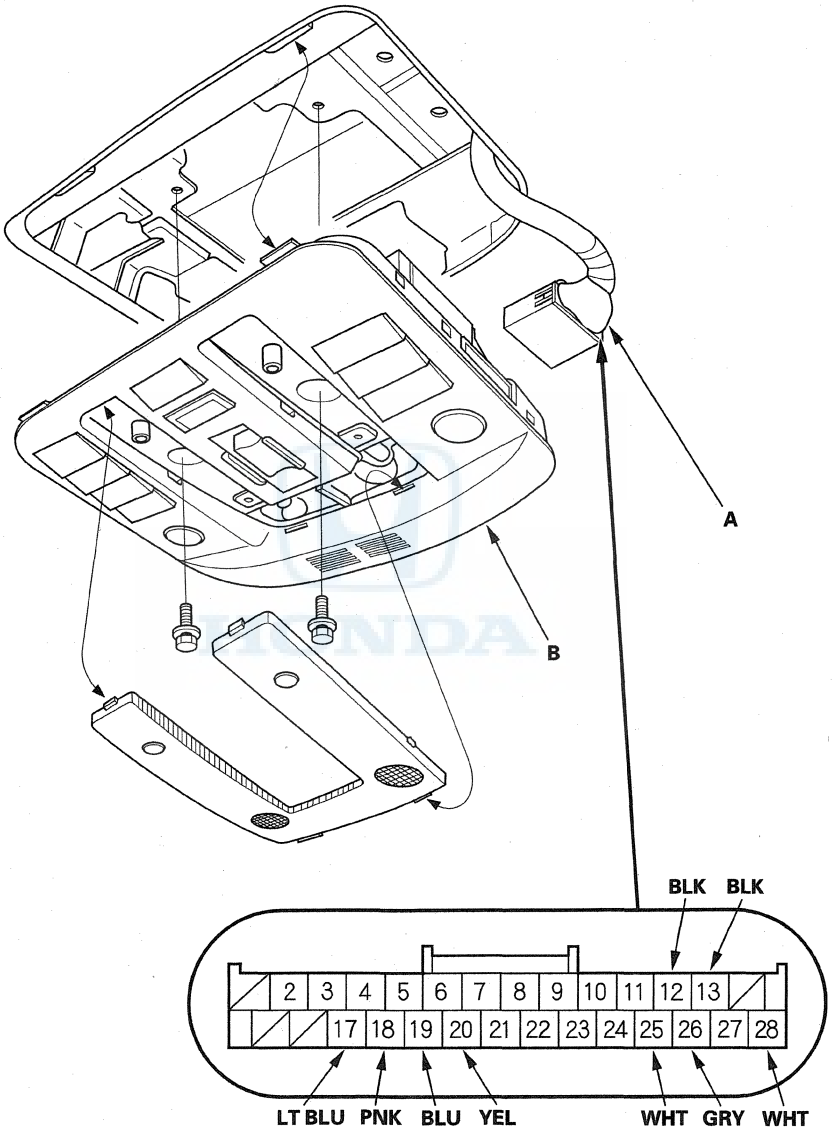

Wire side of female terminals

4. Inspect the connector and socket terminals to be sure they are all making good contact.
   - If the terminals are bent, loose or corroded, repair them as necessary and recheck the system.
   - If the terminals look OK, go to step 5.

(cont'd)

Roof Console Input Test (cont'd)

5. With the connector still disconnected, do these input tests at the following connector.

   - If any test indicates a problem, find and correct the cause, then recheck the system.
   - If all the input tests prove OK, go to step 6.

Cavity	Wire	Test condition	Test: Desired result	Possible cause if desired result is not obtained
18	PNK	Under all conditions	Check for continuity between terminal No. 18 and driver's under-dash fuse/relay box connector W (5P) terminal No. 4: There should be continuity.	An open in the wire
26	GRY	Under all conditions	Check for continuity between terminal No. 26 and driver's under-dash fuse/relay box connector Q (14P) terminal No. 12: There should be continuity.	An open in the wire
20	YEL	Under all conditions	Attach to ground: The right rear map light should come on.	• Blown No. 6 (7.5 A) fuse in the driver's under-dash fuse/relay box • Faulty rear map light • Blown bulb • An open in the wire
25	WHT	Under all conditions	Attach to ground: The left rear map light should come on.	• Blown No. 6 (7.5 A) fuse in the driver's under-dash fuse/relay box • Faulty rear map light • Blown bulb • An open in the wire

6. Reconnect the connector to the roof console, and do these input tests at the following connector.

   - If any test indicates a problem, find and correct the cause, then recheck the system.
   - If all the input tests prove OK, replace the roof console (see page 22-307).

Cavity	Wire	Test condition	Test: Desired result	Possible cause if desired result is not obtained
12	BLK	Under all conditions	Measure the voltage to ground: There should be less than 0.2 V.	• Poor ground (G601) • An open in the wire
13	BLK	Under all conditions	Measure the voltage to ground: There should be less than 0.2 V.	• Poor ground (G601) • An open in the wire
28	WHT	Under all conditions	Measure the voltage to ground: There should be battery voltage.	• Blown No. 6 (7.5 A) fuse in the driver's under-dash fuse/relay box • An open in the wire
17	LT BLU	Right rear map light switch ON	Measure the voltage to ground: There should be less than 0.2 V.	• Poor ground (G601) • Faulty rear map light • An open in the wire
		Right rear map light switch OFF	Measure the voltage to ground: There should be at least 5 V.	• Faulty rear map light • A short to ground in the wire
19	BLU	Left rear map light switch ON	Measure the voltage to ground: There should be less than 0.2 V.	• Poor ground (G601) • Faulty rear map light • An open in the wire
		Left rear map light switch OFF	Measure the voltage to ground: There should be at least 5 V.	• Faulty rear map light • A short to ground in the wire

MICU Input Test

1. Turn the ignition switch to LOCK (0).
2. Remove the left kick panel (see page 20-67).
3. Disconnect driver's under-dash fuse/relay box connectors E, H, P, Q, and W.

   NOTE: All connector views are wire side of female terminals.

CONNECTOR E (16P)

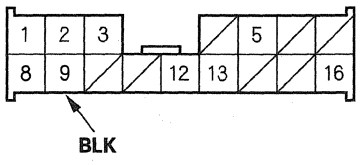

CONNECTOR H (14P)

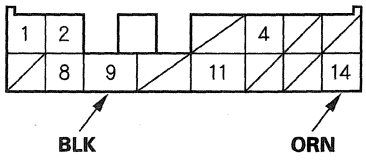

CONNECTOR W (5P)

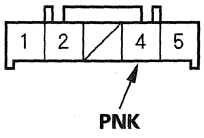

CONNECTOR P (30P)

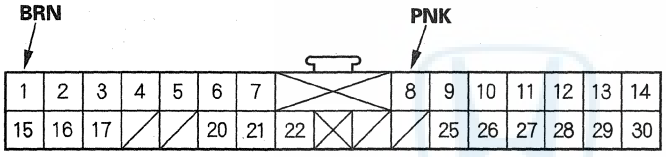

CONNECTOR Q (14P)

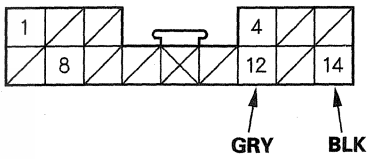

4. Inspect the connector and socket terminals to be sure they are all making good contact.

   - If the terminals are bent, loose or corroded, repair them as necessary and recheck the system.
   - If the terminals look OK, go to step 5.

(cont'd)

MICU Input Test (cont'd)

5. With the connectors still disconnected, do these input tests at the following connectors.

   - If any test indicates a problem, find and correct the cause, then recheck the system.
   - If all the input tests prove OK, go to step 6.

Cavity	Wire	Test condition	Test: Desired result	Possible cause if desired result is not obtained
P8	PNK	Under all conditions	Attach to ground: The driver's and front passenger's foot well lights should come on.	• Blown No. 6 (7.5 A) fuse in the driver's under-dash fuse/relay box • Faulty foot light • An open in the wire
H14	ORN	Under all conditions	Attach to ground: The ignition key light should come on.	• Blown No. 7 (10 A) fuse in the driver's under-dash fuse/relay box • Faulty ignition key light • An open in the wire
Q12	GRY	Interior lights switch in DOOR position	Attach to ground: The individual map lights should come on.	• Blown No. 6 (7.5 A) fuse in the driver's under-dash fuse/relay box • Faulty map light • Faulty roof console • An open in the wire
W4	PNK	Interior lights switch in DOOR position	Attach to ground: The individual map lights should come on.	• Blown No. 6 (7.5 A) fuse in the driver's under-dash fuse/relay box • Faulty map light • Faulty roof console • An open in the wire

6. Reconnect the connectors to the driver's under-dash fuse/relay box, and do these input tests at the following connectors.

   - If any test indicates a problem, find and correct the cause, then recheck the system.
   - If all the input tests prove OK, the MICU must be faulty, replace the driver's under-dash fuse/relay box (see page 22-88).

Cavity	Wire	Test condition	Test: Desired result	Possible cause if desired result is not obtained
P1	BRN	Under all conditions	Measure the voltage to ground: There should be less than 0.2 V.	• Poor ground (G502) • An open in the wire
E9	BLK	Under all conditions	Measure the voltage to ground: There should be less than 0.2 V.	• Poor ground (G601) • An open in the wire
H9	BLK			
Q14	BLK			

Driver's MPCS Unit Input Test

1. Turn the ignition switch to LOCK (0).
2. Remove the driver's door panel (see page 20-9).
3. Disconnect driver's MPCS unit connector A (40P).

DRIVER'S MPCS UNIT CONNECTOR A (40P)

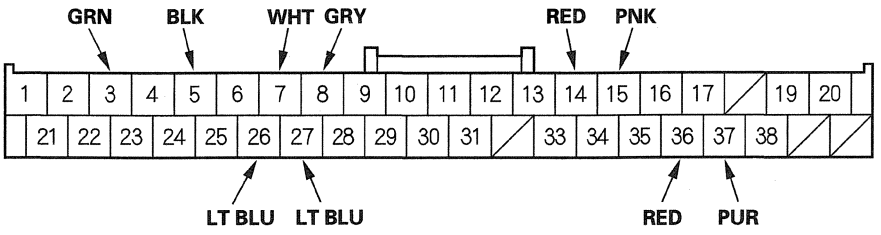

Wire side of female terminals

4. Inspect the connector and socket terminals to be sure they are all making good contact.
   - If the terminals are bent, loose or corroded, repair them as necessary and recheck the system.
   - If the terminals look OK, go to step 5.
5. With the connector still disconnected, do these input tests at the following connector.
   - If any test indicates a problem find and correct the cause, then recheck the system.
   - If all the input tests prove OK, go to step 6.

Cavity	Wire	Test condition	Test: Desired result	Possible cause if desired result is not obtained
A14	RED	Connect the terminals A7 and A27 with a jumper wire.	Attach to ground: The driver's door pocket light should come on.	• Faulty driver's door pocket light • An open in the wire
A15	PNK	Connect the terminals A7 and A27 with a jumper wire.	Attach to ground: The driver's door courtesy light should come on.	• Faulty driver's door courtesy light • An open in the wire
A36	RED	Connect the terminals A7 and A27 with a jumper wire.	Attach to ground: The driver's door inner handle light should come on.	• Faulty driver's door inner handle light • An open in the wire
A37	PUR	Connect the terminals A7 and A37 with a jumper wire.	Check the driver's door outer handle light: The light should come on.	• Faulty driver's door outer handle light • Poor ground (G601) • An open in the wire
A8	GRY	Driver's under-dash fuse/relay box connector J (21P) and power window master switch 6P connector disconnected	Check for continuity between the A8 terminal and driver's under-dash fuse/relay box connector J (21P) terminal No. 1: There should be continuity.	An open in the wire
			Check for continuity to ground: There should be no continuity.	A short to ground in the wire

(cont'd)

Driver's MPCS Unit Input Test (cont'd)

6. Reconnect the connector to the driver's MPCS unit, and do these input tests at the following connector.

   - If any test indicates a problem, find and correct the cause, then recheck the system.
   - If all the input tests prove OK, the control unit must be faulty; replace the driver's MPCS unit and go to step 7.

Cavity	Wire	Test condition	Test: Desired result	Possible cause if desired result is not obtained
A5	BLK	Under all conditions	Measure the voltage to ground: There should be less than 0.2 V.	• Poor ground (G601) • Faulty driver's under-dash fuse/relay box • An open in the wire
A7	WHT	Under all conditions	Measure the voltage to ground: There should be battery voltage.	• Blown No. 15 (40 A) fuse in the under-hood fuse/relay box • Blown No. 7 (10 A) fuse in the driver's under-dash fuse/relay box • Faulty driver's under-dash fuse/relay box • An open in the wire
A3	GRN	Driver's door open	Measure the voltage to ground: There should be less than 0.2 V.	• Faulty driver's door switch • Faulty driver's under-dash fuse/relay box • An open in the wire
		Driver's door closed	Measure the voltage to ground: There should be at least 5 V.	• Faulty driver's door switch • A short to ground in the wire
A26	LT BLU	Under all conditions	Measure the voltage to ground: There should be battery voltage.	• Blown No. 15 (40 A) fuse in the under-hood fuse/relay box • Blown No. 7 (10 A) fuse in the driver's under-dash fuse/relay box • Faulty driver's under-dash fuse/relay box • An open in the wire
A27	LT BLU	Under all conditions	Measure the voltage to ground: There should be battery voltage.	• Blown No. 15 (40 A) fuse in the under-hood fuse/relay box • Blown No. 7 (10 A) fuse in the driver's under-dash fuse/relay box • Faulty driver's under-dash fuse/relay box • An open in the wire

7. Reset the power window control unit (see page 22-331).

Front Passenger's MPCS Unit Input Test

1. Turn the ignition switch to LOCK (0).
2. Remove the front passenger's door panel (see page 20-9).
3. Disconnect front passenger's MPCS unit connector A (28P).

FRONT PASSENGER'S MPCS UNIT CONNECTOR A (28P)

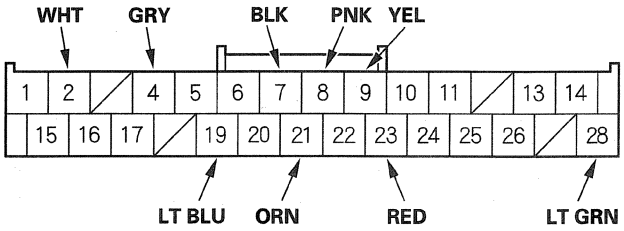

Wire side of female terminals

4. Inspect the connector and socket terminals to be sure they are all making good contact.
   - If the terminals are bent, loose or corroded, repair them as necessary and recheck the system.
   - If the terminals look OK, go to step 5.
5. With the connector still disconnected, do these input tests at the following connector.
   - If any test indicates a problem, find and correct the cause, then recheck the system.
   - If all the input tests prove OK, go to step 6.

Cavity	Wire	Test condition	Test: Desired result	Possible cause if desired result is not obtained
A8	PNK	Connect terminals A2 and A19 with a jumper wire.	Attach to ground: The front passenger's door pocket light should come on.	• Faulty front passenger's door pocket light • An open in the wire
A9	YEL	Connect terminals A2 and A19 with a jumper wire.	Attach to ground: The front passenger's door courtesy light should come on.	• Faulty front passenger's door courtesy light • An open in the wire
A21	ORN	Connect terminals A2 and A19 with a jumper wire.	Attach to ground: The front passenger's door inner handle light should come on.	• Faulty front passenger's door inner handle light • An open in the wire
A23	RED	Connect terminals A2 and A23 with a jumper wire.	Check the front passenger's door outer handle light: The front passenger's door outer handle light should come on.	• Faulty front passenger's door outer handle light • Poor ground (G506) • An open in the wire

(cont'd)

Front Passenger's MPCS Unit Input Test (cont'd)

Cavity	Wire	Test condition	Test: Desired result	Possible cause if desired result is not obtained
A4	GRY	Driver's under-dash fuse/relay box connector X (39P) and right rear power window switch 14P connector disconnected	Check for continuity between A4 terminal and driver's under-dash fuse/relay box connector X (39P) terminal No. 15: There should be continuity.	• Faulty passenger's under-dash fuse/relay box • An open in the wire
			Check for continuity to ground: There should be no continuity.	• Faulty passenger's under-dash fuse/relay box • A short to ground in the wire

6. Reconnect the connector to the front passenger's MPCS unit, and do these input tests at the following connector.

   • If any test indicates a problem, find and correct the cause, then recheck the system.
   • If all the input tests prove OK, the control unit must be faulty; replace the front passenger's MPCS unit and go to step 7.

Cavity	Wire	Test condition	Test: Desired result	Possible cause if desired result is not obtained
A7	BLK	Under all conditions	Measure the voltage to ground: There should be less than 0.2 V.	• Poor ground (G506) • An open in the wire
A2	WHT	Under all conditions	Measure the voltage to ground: There should be battery voltage.	• Blown No. 15 (40 A) fuse in the under-hood fuse/relay box • Blown No. 7 (10 A) fuse in the driver's under-dash fuse/relay box • Faulty driver's under-dash fuse/relay box • Faulty passenger's under-dash fuse/relay box • An open in the wire
A19	LT BLU	Under all conditions	Measure the voltage to ground: There should be battery voltage.	• Blown No. 15 (40 A) fuse in the under-hood fuse/relay box • Blown No. 7 (10 A) fuse in the driver's under-dash fuse/relay box • Faulty driver's under-dash fuse/relay box • Faulty passenger's under-dash fuse/relay box • An open in the wire
A28	LT GRN	Front passenger's door open	Measure the voltage to ground: There should be less than 0.2 V.	• Faulty front passenger's door switch • An open in the wire
		Front passenger's door closed	Measure the voltage to ground: There should be at least 5 V.	• Faulty front passenger's door switch • A short to ground in the wire

7. Reset the power window control unit (see page 22-331).

Left Rear Power Window Switch Input Test

1. Turn the ignition switch to LOCK (0).
2. Remove the left rear power window switch (see page 22-372).
3. Disconnect the 14P connector from the left rear power window switch.

LEFT REAR POWER WINDOW SWITCH 14P CONNECTOR

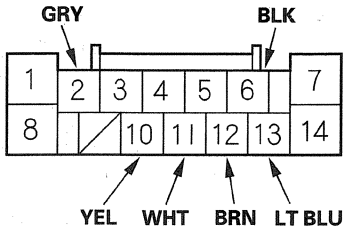

Wire side of female terminals

4. Inspect the connector and socket terminals to be sure they are all making good contact.
   - If the terminals are bent, loose or corroded, repair them as necessary and recheck the system.
   - If the terminals look OK, go to step 5.
5. With the connector still disconnected, do these input tests at the following connector.
   - If any test indicates a problem, find and correct the cause, then recheck the system.
   - If all the input tests prove OK, replace the left rear power window switch (see page 22-372).

Cavity	Wire	Test condition	Test: Desired result	Possible cause if desired result is not obtained
6*	BLK	Under all conditions	Measure the voltage to ground: There should be less than 0.2 V.	• Poor ground (G601) • An open in the wire
11	WHT	Under all conditions	Measure the voltage to ground: There should be battery voltage.	• Blown No. 15 (40 A) fuse in the under-hood fuse/relay box • Blown No. 6 (7.5 A) fuse in the driver's under-dash fuse/relay box • Faulty driver's under-dash fuse/relay box • An open in the wire
10	YEL	Under all conditions	Attach to ground: The left rear door courtesy light should come on.	• Faulty left rear door courtesy light • An open in the wire
12	BRN	Under all conditions	Attach to ground: The left rear door inner handle light should come on.	• Faulty left rear door inner handle light • An open in the wire
2	GRY	Driver's under-dash fuse/relay box connector H (14P) disconnected.	Check for continuity between terminal No. 2 and driver's under-dash fuse/relay box connector H (14P) terminal No. 4: There should be continuity.	An open in the wire
			Check for continuity to ground: There should be no continuity.	A short to ground in the wire
13*	LT BLU	Left rear door open	Measure the voltage to ground: There should be less than 0.2 V.	• Faulty left rear door switch • An open in the wire
		Left rear door closed	Measure the voltage to ground: There should be at least 5 V.	• Faulty left rear door switch • A short to ground in the wire

*: Reconnect the left rear power window switch 14P connector.

Right Rear Power Window Switch Input Test

1. Turn the ignition switch to LOCK (0).
2. Remove the right rear power window switch (see page 22-372).
3. Disconnect the 14P connector from the right rear power window switch.

RIGHT REAR POWER WINDOW SWITCH 14P CONNECTOR

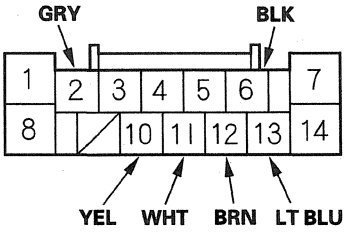

Wire side of female terminals

4. Inspect the connector and socket terminals to be sure they are all making good contact.
   - If the terminals are bent, loose or corroded, repair them as necessary and recheck the system.
   - If the terminals look OK, go to step 5.
5. With the connector still disconnected, do these input tests at the following connector.
   - If any test indicates a problem, find and correct the cause, then recheck the system.
   - If all the input tests prove OK, replace the right rear power window switch (see page 22-372).

Cavity	Wire	Test condition	Test: Desired result	Possible cause if desired result is not obtained
6*	BLK	Under all conditions	Measure the voltage to ground: There should be less than 0.2 V.	• Poor ground (G651) • An open in the wire
11	WHT	Under all conditions	Measure the voltage to ground: There should be battery voltage.	• Blown No. 15 (40 A) fuse in the under-hood fuse/relay box • Blown No. 6 (7.5 A) fuse in the driver's under-dash fuse/relay box • Faulty driver's under-dash fuse/relay box • An open in the wire
10	YEL	Under all conditions	Attach to ground: The right rear door courtesy light should come on.	• Faulty right rear door courtesy light • An open in the wire
12	BRN	Under all conditions	Attach to ground: The right rear door inner handle light should come on.	• Faulty right rear door inner handle light • An open in the wire
2	GRY	Driver's under-dash fuse/relay box connector X (39P) and front passenger's MPCS unit connector A (28P) disconnected	Check for continuity between terminal No. 2 and driver's under-dash fuse/relay box connector X (39P) terminal No. 15: There should be continuity.	• Faulty passenger's under-dash fuse/relay box • An open in the wire
			Check for continuity to ground: There should be no continuity.	• Faulty passenger's under-dash fuse/relay box • A short to ground in the wire
13*	LT BLU	Right rear door open	Measure the voltage to ground: There should be less than 0.2 V.	• Faulty right rear door switch • An open in the wire
		Right rear door closed	Measure the voltage to ground: There should be at least 5 V.	• Faulty right rear door switch • A short to ground in the wire

*: Reconnect the right rear power window switch 14P connector.

Roof Console Replacement

1. Turn the map light switch OFF.
2. Carefully pry off the lens (A) with a small screwdriver.

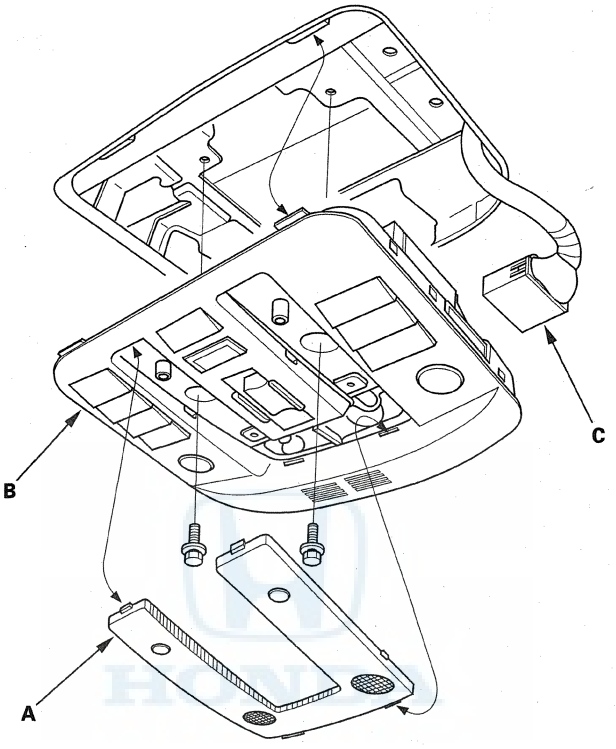

3. Remove the two bolts and the roof console (B).
4. Pull down on the front corners of the roof console to release the two clips.
5. Push the console forward, then swing the rear edge down.
6. Disconnect the 28P connector (C) from the roof console.
7. Install the parts in the reverse order of removal.

Ambient Light Test

1. Remove the roof console, and disconnect the 28P connector (see page 22-307).

2. Connect the roof console connector terminal No. 8 to battery power and terminal No. 7 to body ground. The ambient lights (A) should turn on. If they do not turn on, replace the roof console.

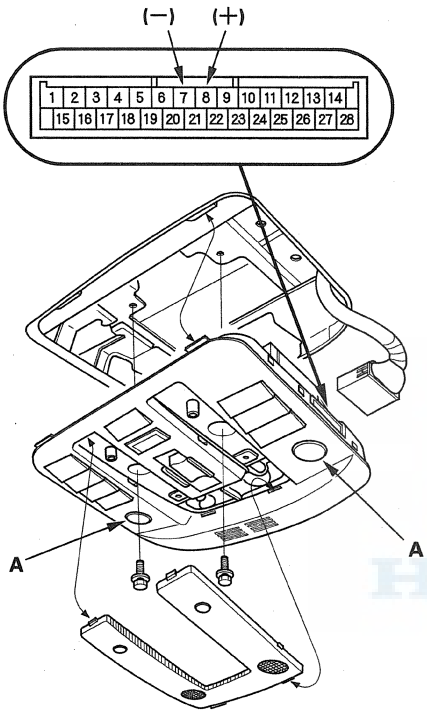

Front Individual Map Light Replacement

1. Carefully pry off the lens (A) with a small screwdriver.

Front Map Light: 8 W x 2

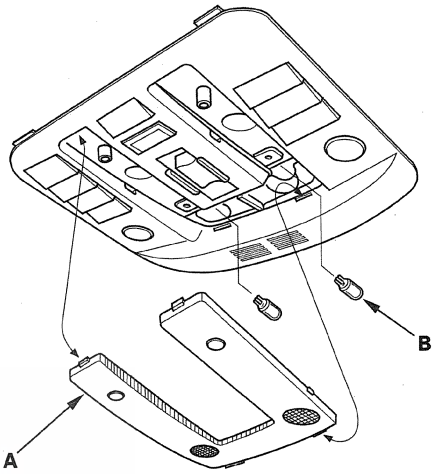

2. Check the bulb(s) (B). If the bulb is OK, but there is a malfunction, check the interior lights switch (see page 22-297).

Rear Individual Map Light Test/Replacement

1. Carefully pry off the lens (A) with a small screwdriver.

Rear Map Light: 8 W x 2

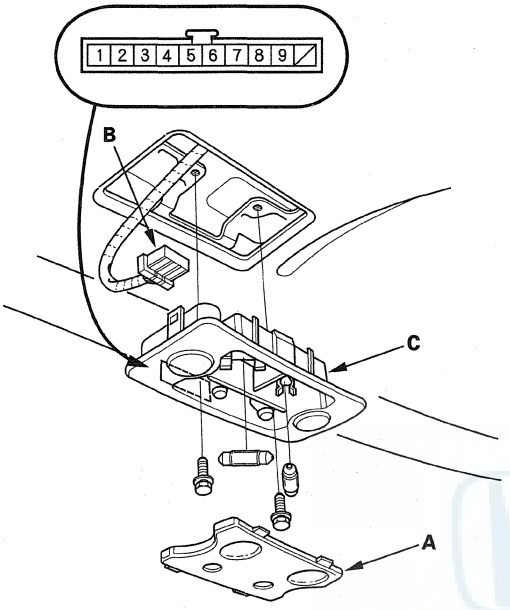

2. Remove the two mounting bolts.

3. Disconnect the 10P connector (B) from the rear map light (C).

Switch Test

4. Check for continuity between terminals No. 5 (or No. 6) and No. 7 with the left (or right) rear map light switch ON. There should be continuity.

5. Check for continuity between terminals No. 5 (or No. 6) and No. 7 with the left (or right) rear map light switch OFF. There should be no continuity.

6. If the continuity is not as specified, replace the rear map light assembly.

Map Light Test

7. Connect battery power to terminal No. 4 and ground terminal No. 8. The left map light should come on.

8. Connect battery power to terminal No. 4 and ground terminal No. 9. The right map light should come on.

9. If the test result is not as specified, check the bulb. If the bulb is OK, replace the rear map light assembly.

Ambient Lights Test

10. Connect battery power to terminal No. 3 and ground terminal No. 1. The ambient lights should come on.

11. If the test result is not as specified, replace the rear map light assembly.

Switch Lights Test

12. Connect battery power to terminal No. 3 and ground terminal No. 2. The switch lights should come on.

13. If the test result is not as specified, check the bulbs. If the bulbs are OK, replace the rear map light assembly.

Glove Box Light Replacement

1. Remove the glove box stops and damper (see page 20-104).
2. Carefully pry the glove box light out of the glove box housing.
3. Twist the socket (A) to remove it from the glove box light (B).

Glove Box Light: 1.4 W

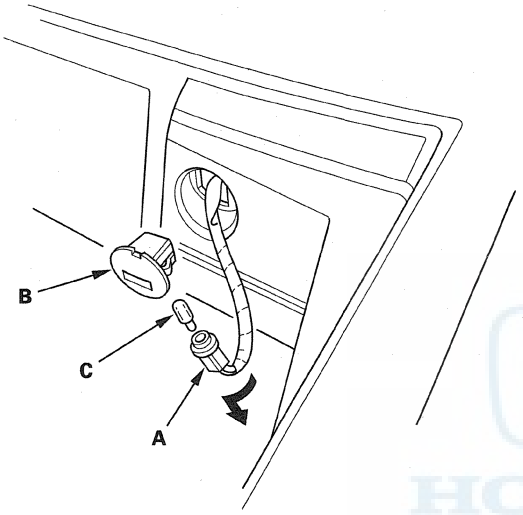

4. Remove the bulb (C) from the socket.
5. Install the light in the reverse order of removal.

Console Box Light Replacement

1. Remove the center console (see page 20-92).
2. Carefully pry out the console box light out of the center console.
3. Twist the socket (A) to remove it from the console box light (B).

Console Box Light: 1.4 W

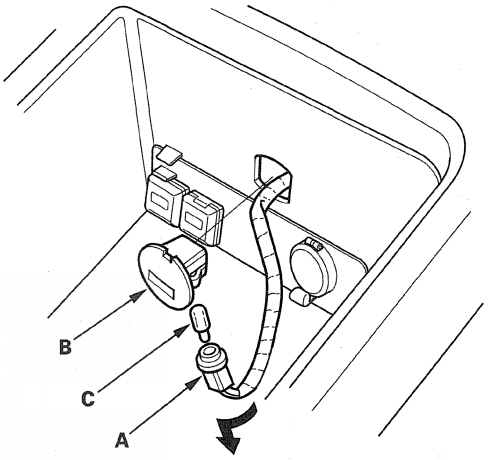

4. Remove the bulb (C) from the socket.
5. Install the light in the reverse order of removal.

Courtesy Light Replacement

1. Carefully pry off the lens (A) with a small screwdriver.

   Courtesy Light: 2 CP

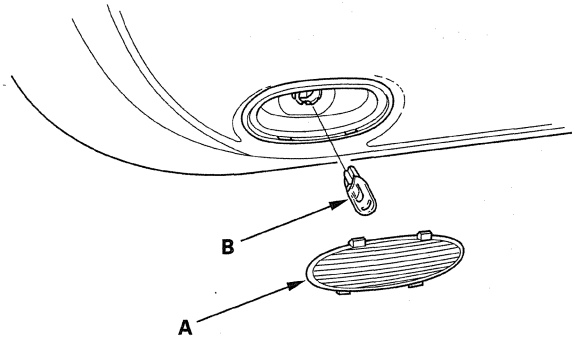

2. Remove the bulb (B) from the socket.
3. Install the parts in the reverse order of removal.

Vanity Mirror Light Test

1. Open the sunvisor.
2. Remove the sunvisor (see page 20-86).
3. Disconnect the 2P connector (A) from the vanity mirror light.

   Vanity Mirror Light: 2 W

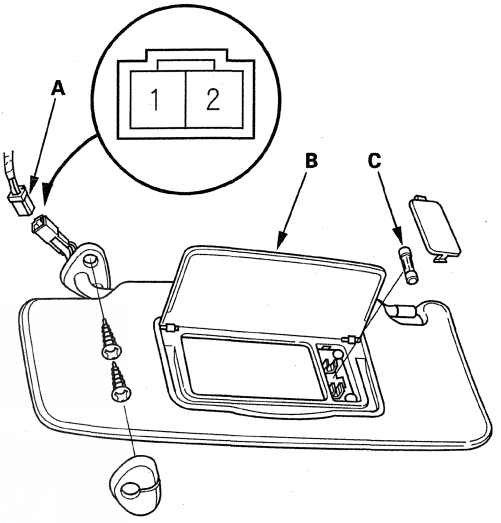

4. Check for continuity between terminals No. 1 and No. 2.

   - With the vanity mirror cover (B) opened, there should be continuity.
   - With the vanity mirror cover closed, there should be no continuity.

   NOTE: Make sure the sunvisor is fully retracted.

5. If the continuity is not as specified, replace the bulb (C) or the sunvisor.

Footwell Light Replacement

Driver's

1. Remove the driver's dashboard undercover (see page 20-100).
2. Disconnect the 2P connector (A) from the driver's footwell light (B).

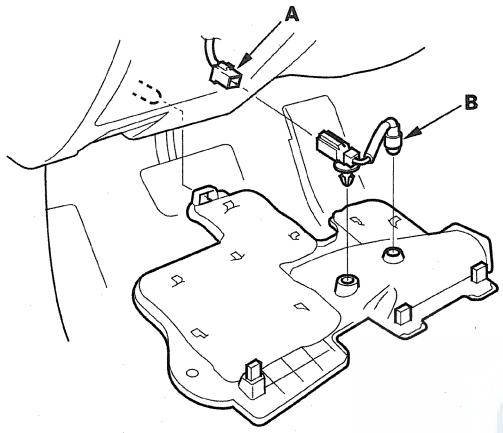

3. Remove the footwell light.
4. Install the parts in the reverse order of removal.

Passenger's

1. Remove the passenger's dashboard undercover (see page 20-100).
2. Disconnect the 2P connector (A) from the passenger's footwell light (B).

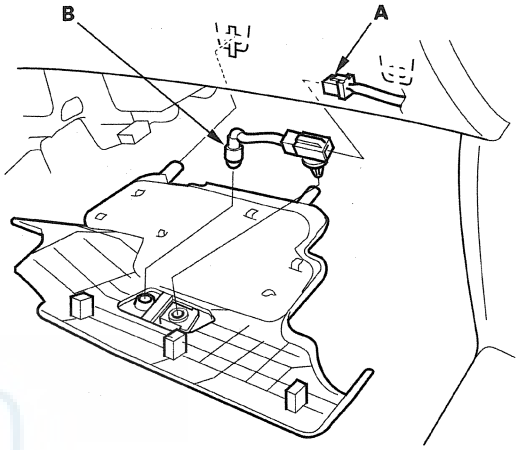

3. Remove the footwell light.
4. Install the parts in the reverse order of removal.

Trunk Light Test/Replacement

1. Open the trunk lid.
2. Carefully pry out the trunk light (A).

   Trunk Light: 5 W

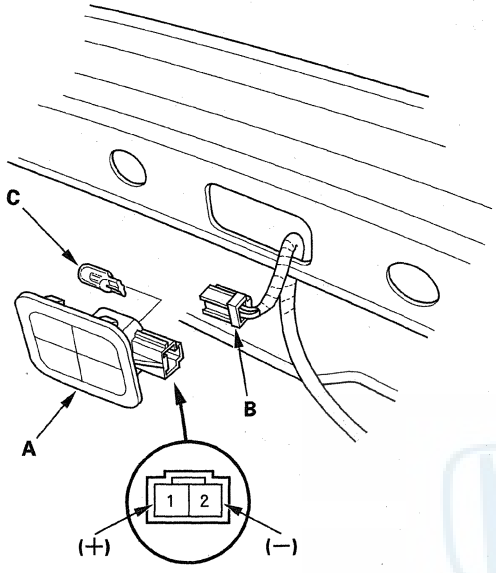

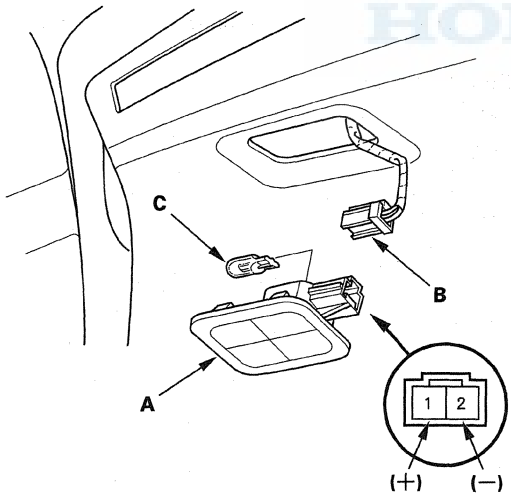

3. Disconnect the 2P connector (B) from the light.
4. Check for continuity between terminals No. 1 (+) and No. 2 (−). There should be continuity. If there is no continuity, check the bulb (C). If the bulb is OK, replace the trunk light.
5. Install the parts in the reverse order of removal.

Trunk Lid Latch Switch Test

1. Open the trunk lid, and remove the trunk lid trim (see page 20-85).
2. Disconnect the 5P connector (A) from the trunk lid latch (B).

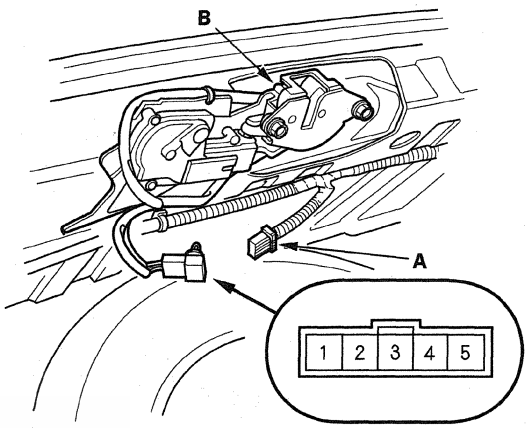

3. Check for continuity between terminals No. 3 and No. 1.
   - There should be continuity with the trunk lid latch unlatched (trunk lid open).
   - There should be no continuity with the trunk lid latch latched (trunk lid closed).
4. If the continuity is not as specified, replace the trunk lid latch switch.

Door Switch Test

Driver's Door

1. Remove the driver's door panel (see page 20-9).
2. Disconnect the 2P connector (A) from the door switch (B).

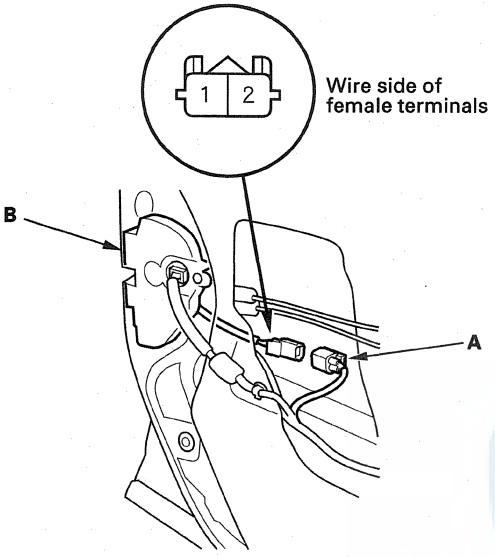

3. Check for continuity between terminals No. 1 and No. 2.
   - There should be continuity with the door open.
   - There should be no continuity with the door closed.
4. If the continuity is not as specified, replace the door lock actuator.

Front Passenger's and Rear Door

1. Remove the front passenger's door panel (see page 20-9) or rear door panel (see page 20-21).
2. Disconnect the 2P connector (A) from the door switch (B).

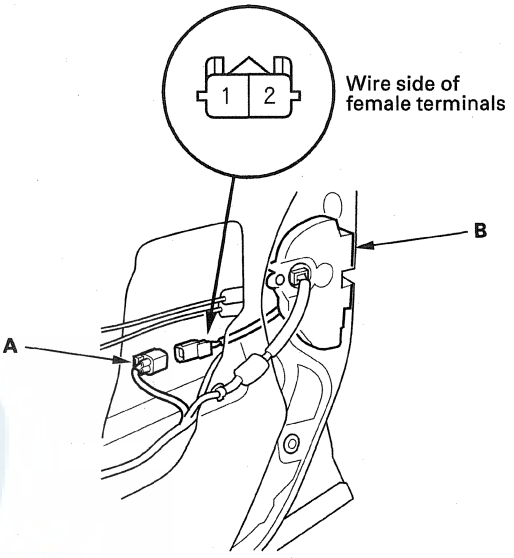

The illustration shows the front passenger's door.

3. Check for continuity between terminals No. 1 and No. 2.
   - There should be continuity with the door open.
   - There should be no continuity with the door closed.
4. If the continuity is not as specified, replace the door lock actuator.

Entry Lights Control System

Component Location Index

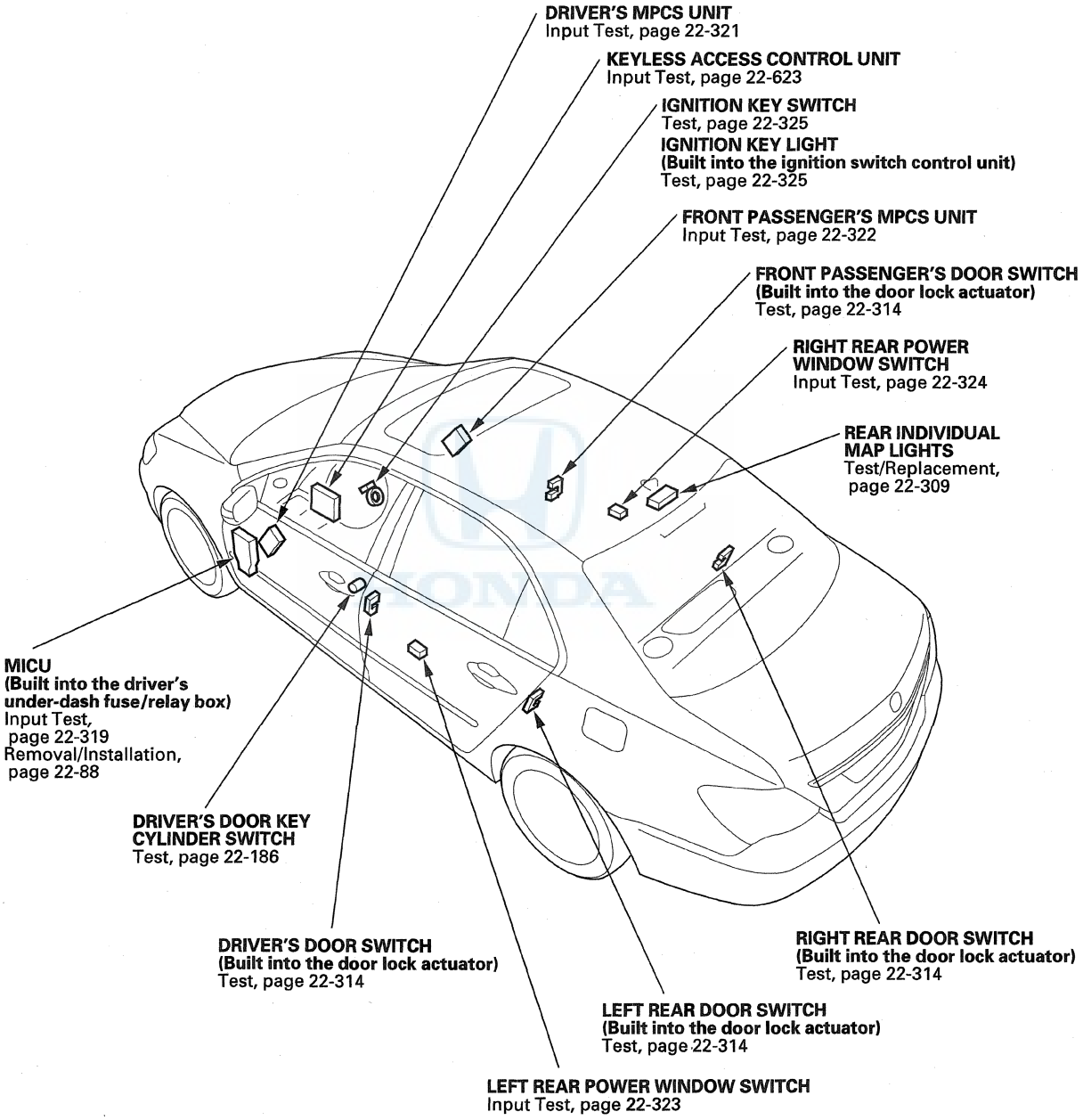

(cont'd)

Component Location Index (cont'd)

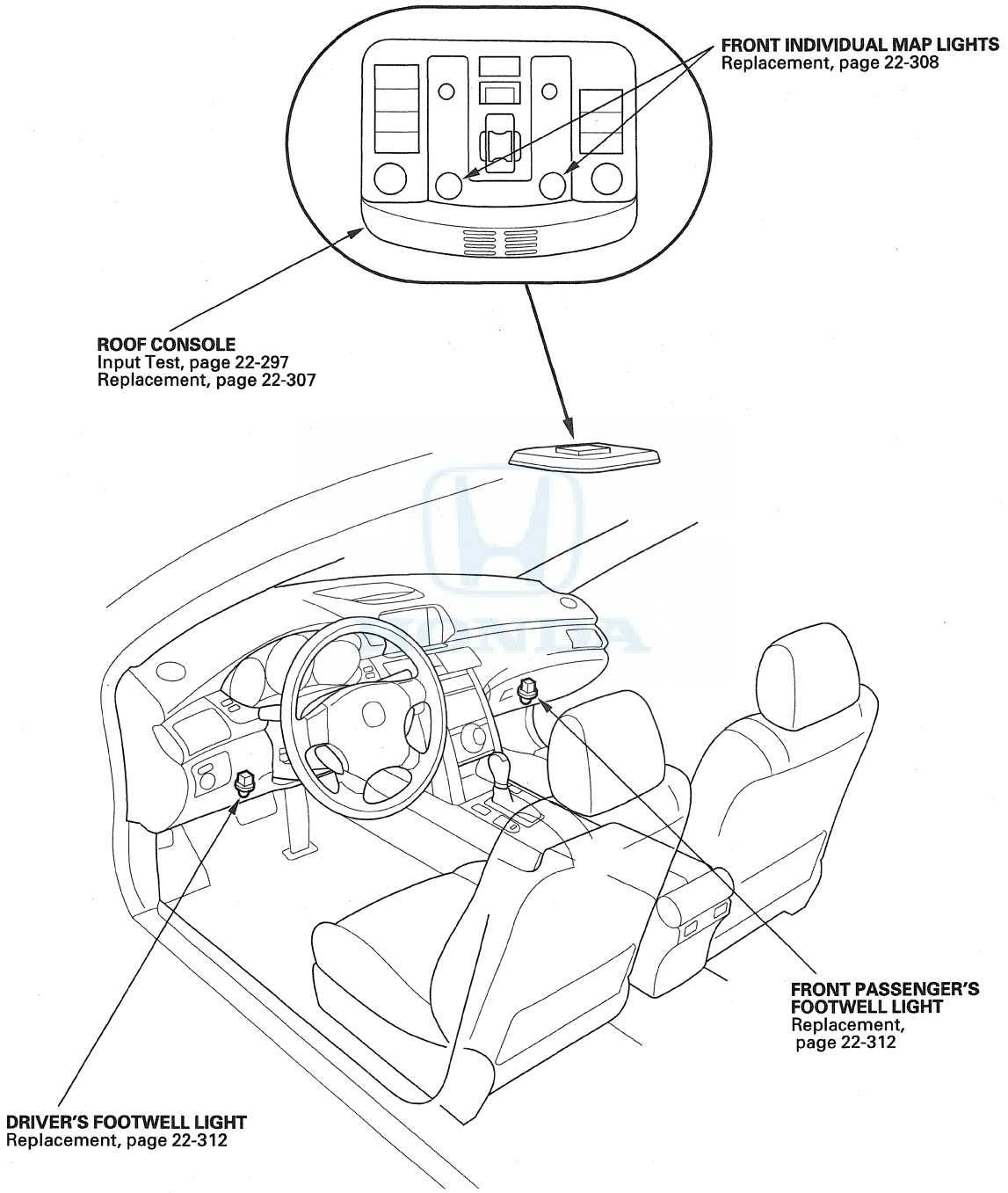

Circuit Diagram

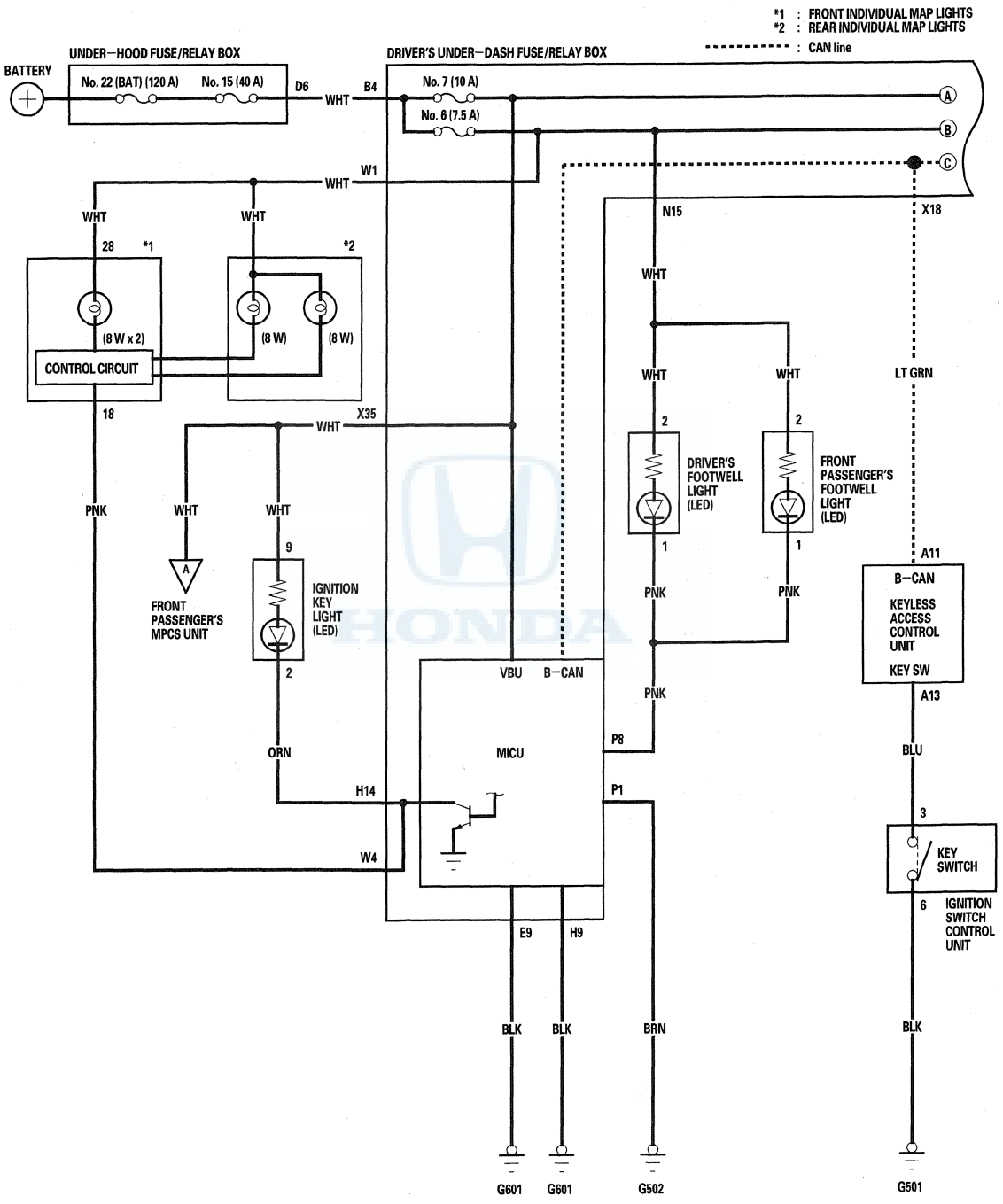

(cont'd)

Entry Lights Control System

Circuit Diagram (cont'd)

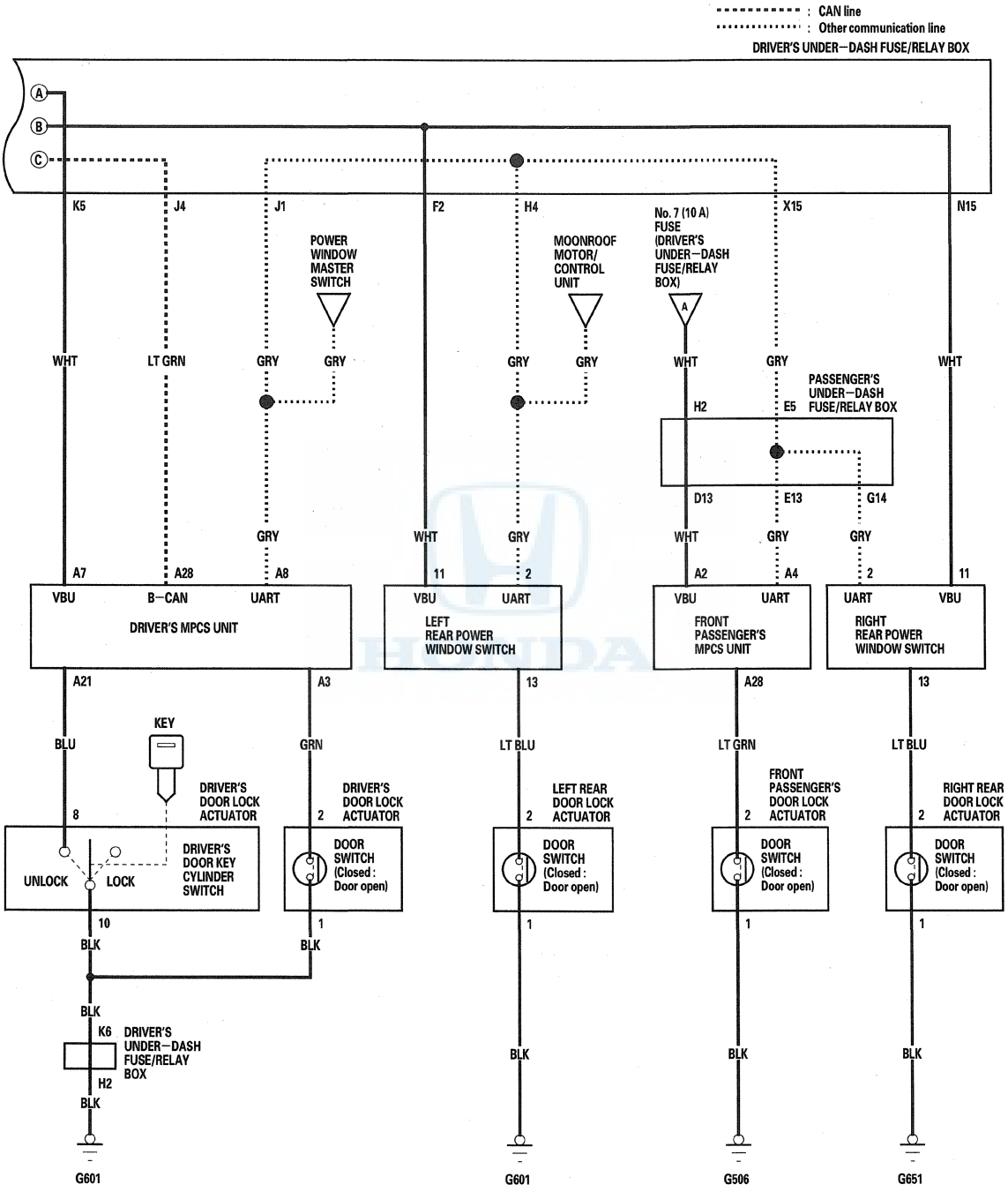

Control Unit Input Test

MICU

1. Turn the ignition switch to LOCK (0).
2. Remove the left kick panel (see page 20-67).
3. Disconnect the driver's under-dash fuse/relay box connectors E, H, P, and W.

   NOTE: All connector views are wire side of female terminals.

CONNECTOR E (16P)

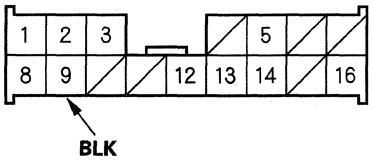

CONNECTOR H (14P)

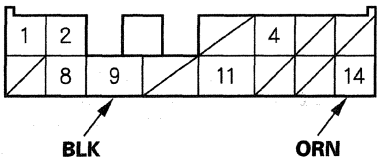

CONNECTOR P (30P)

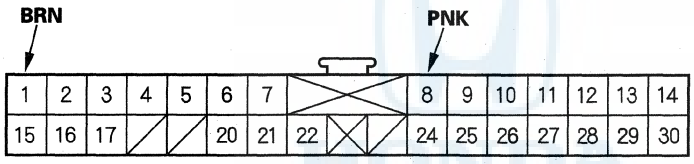

CONNECTOR W (5P)

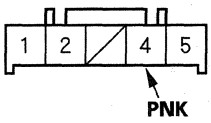

4. Inspect the connector and socket terminals to be sure they are all making good contact.

   - If the terminals are bent, loose or corroded, repair them as necessary and recheck the system.
   - If the terminals look OK, go to step 5.

(cont'd)

Control Unit Input Test (cont'd)

5. With the connectors still disconnected, do these input tests at the following connectors.

   - If any test indicates a problem, find and correct the cause, then recheck the system.
   - If all the input tests prove OK, go to step 6.

Cavity	Wire	Test condition	Test: Desired result	Possible cause if desired result is not obtained
P8	PNK	Under all conditions	Attach to ground: The driver's and front passenger's footwell lights should come on.	• Blown No. 6 (7.5 A) fuse in the driver's under-dash fuse/relay box • Faulty footwell light • An open in the wire
H14	ORN	Under all conditions	Attach to ground: The ignition key light should come on.	• Blown No. 7 (10 A) fuse in the driver's under-dash fuse/relay box • Faulty ignition key light • An open in the wire
W4	PNK	Interior lights switch in DOOR position	Attach to ground: The individual map lights should come on.	• Blown No. 6 (7.5 A) fuse in the driver's under-dash fuse/relay box • Faulty map light • Faulty roof console • An open in the wire

6. Reconnect the connectors to the driver's under-dash fuse/relay box, and do these input tests at the following connectors.

   - If any test indicates a problem, find and correct the cause, then recheck the system.
   - If all the input tests prove OK, the MICU must be faulty, replace the driver's under-dash fuse/relay box (see page 22-88).

Cavity	Wire	Test condition	Test: Desired result	Possible cause if desired result is not obtained
P1	BRN	Under all conditions	Measure the voltage to ground: There should be less than 0.2 V.	• Poor ground (G502) • An open in the wire
E9	BLK	Under all conditions	Measure the voltage to ground: There should be less than 0.2 V.	• Poor ground (G601) • An open in the wire
H9	BLK			

DRIVER'S MPCS UNIT

7. Turn the ignition switch to LOCK (0).
8. Remove the driver's door panel (see page 20-9).
9. Disconnect driver's MPCS unit connector A (40P).

DRIVER'S MPCS UNIT CONNECTOR A (40P)

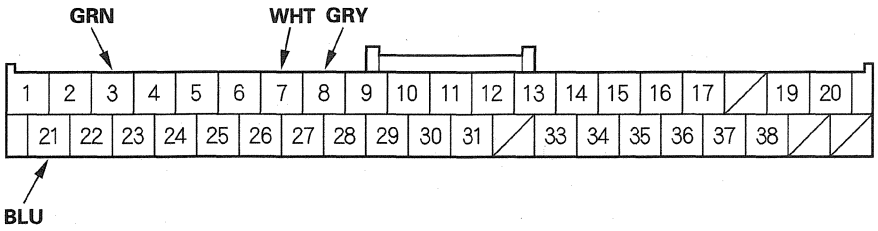

Wire side of female terminals

10. Inspect the connector and socket terminals to be sure they are all making good contact.
    - If the terminals are bent, loose or corroded, repair them as necessary and recheck the system.
    - If the terminals look OK, go to step 11.
11. With the connector still disconnected, do these input tests at the following connector.
    - If any test indicates a problem, find and correct the cause, then recheck the system.
    - If all the input tests prove OK, go to step 12.

Cavity	Wire	Test condition	Test: Desired result	Possible cause if desired result is not obtained
A8	GRY	Driver's under-dash fuse/relay box connector J (21P) and power window master switch 6P connector disconnected	Check for continuity between terminal A8 and driver's under-dash fuse/relay box connector J (21P) terminal No. 1: There should be continuity.	An open in the wire
			Check for continuity to ground: There should be no continuity.	A short to ground in the wire

12. Reconnect the connector to the driver's MPCS unit, turn the ignition switch to ON (II), and make these tests at the following connector.
    - If any test indicates a problem, find and correct the cause, then recheck the system.
    - If all the input tests prove OK, go to step 13.

Cavity	Wire	Test condition	Test: Desired result	Possible cause if desired result is not obtained
A7	WHT	Under all conditions	Measure the voltage to ground: There should be battery voltage.	• Blown No. 15 (40 A) fuse in the under-hood fuse/relay box • Blown No. 7 (10 A) fuse in the driver's under-dash fuse/relay box • Faulty driver's under-dash fuse/relay box • An open in the wire
A3	GRN	Driver's door open	Measure the voltage to ground: There should be less than 0.2 V.	• Faulty driver's door switch • An open in the wire
		Driver's door closed	Measure the voltage to ground: There should be at least 5 V.	• Faulty driver's door switch • A short to ground in the wire
A21	BLU	Driver's door key cylinder in UNLOCK	Measure the voltage to ground: There should be less than 0.2 V.	• Faulty driver's door key cylinder switch • An open in the wire
		Driver's door key cylinder in neutral or LOCK	Measure the voltage to ground: There should be at least 5 V.	• Faulty driver's door key cylinder switch • A short to ground in the wire

(cont'd)

Control Unit Input Test (cont'd)

FRONT PASSENGER'S MPCS UNIT

13. Turn the ignition switch to LOCK (0).
14. Remove the front passenger's door panel (see page 20-9).
15. Disconnect front passenger's MPCS unit connector A (28P).

FRONT PASSENGER'S MPCS UNIT CONNECTOR A (28P)

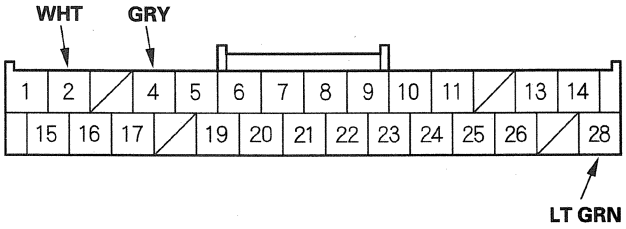

Wire side of female terminals

16. Inspect the connector and socket terminals to be sure they are all making good contact.
    - If the terminals are bent, loose or corroded, repair them as necessary and recheck the system.
    - If the terminals look OK, go to step 17.
17. With the connector still disconnected, do these input tests at the following connector.
    - If any test indicates a problem, find and correct the cause, then recheck the system.
    - If all the input tests prove OK, go to step 18.

Cavity	Wire	Test condition	Test: Desired result	Possible cause if desired result is not obtained
A4	GRY	Driver's under-dash fuse/relay box connector X (39P) and right rear power window switch 14P connector disconnected	Check for continuity between terminal A4 and driver's under-dash fuse/relay box connector X (39P) terminal No. 15: There should be continuity.	• Faulty passenger's under-dash fuse/relay box • An open in the wire
			Check for continuity to ground: There should be no continuity.	• Faulty passenger's under-dash fuse/relay box • A short to ground in the wire

18. Reconnect the connector to the front passenger's MPCS unit, and do these input tests at the following connector.
    - If any test indicates a problem, find and correct the cause, then recheck the system.
    - If all the input tests prove OK, go to step 19.

Cavity	Wire	Test condition	Test: Desired result	Possible cause if desired result is not obtained
A2	WHT	Under all conditions	Measure the voltage to ground: There should be battery voltage.	• Blown No. 15 (40 A) fuse in the under-hood fuse/relay box • Blown No. 7 (10 A) fuse in the driver's under-dash fuse/relay box • Faulty driver's under-dash fuse/relay box • Faulty passenger's under-dash fuse/relay box • An open in the wire
A28	LT GRN	Front passenger's door open	Measure the voltage to ground: There should be less than 0.2 V.	• Faulty front passenger's door switch • An open in the wire
		Front passenger's door closed	Measure the voltage to ground: There should be at least 5 V.	• Faulty front passenger's door switch • A short to ground in the wire

LEFT REAR POWER WINDOW SWITCH

19. Turn the ignition switch to LOCK (0).
20. Remove the left rear power window switch (see page 22-372).
21. Disconnect the 14P connector from the left rear power window switch.

LEFT REAR POWER WINDOW SWITCH 14P CONNECTOR

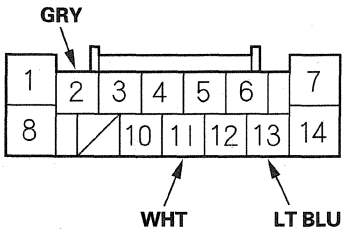

Wire side of female terminals

22. Inspect the connector and socket terminals to be sure they are all making good contact.
    - If the terminals are bent, loose or corroded, repair them as necessary and recheck the system.
    - If the terminals look OK, go to step 23.
23. With the connector still disconnected, do these input tests at the following connector.
    - If any test indicates a problem, find and correct the cause, then recheck the system.
    - If all the input tests prove OK, go to step 24.

Cavity	Wire	Test condition	Test: Desired result	Possible cause if desired result is not obtained
11*	WHT	Under all conditions	Measure the voltage to ground: There should be battery voltage.	• Blown No. 15 (40 A) fuse in the under-hood fuse/relay box • Blown No. 6 (7.5 A) fuse in the driver's under-dash fuse/relay box • Faulty driver's under-dash fuse/relay box • An open in the wire
13*	LT BLU	Left rear door open	Measure the voltage to ground: There should be less than 0.2 V.	• Faulty left rear door switch • An open in the wire
		Left rear door closed	Measure the voltage to ground: There should be at least 5 V.	• Faulty left rear door switch • A short to ground in the wire
2	GRY	Driver's under-dash fuse/relay box connector H (14P) disconnected and moonroof motor/control unit 10P connector disconnected	Check for continuity between terminal No. 2 and driver's under-dash fuse/relay box connector H (14P) terminal No. 4: There should be continuity.	An open in the wire
			Check for continuity to ground: There should be no continuity.	A short to ground in the wire

*: Reconnect the left rear power window switch 14P connector.

(cont'd)

Control Unit Input Test (cont'd)

RIGHT REAR POWER WINDOW SWITCH

24. Turn the ignition switch to LOCK (0).
25. Remove the right rear power window switch (see page 22-372).
26. Disconnect the 14P connector from the right rear power window switch.

RIGHT REAR POWER WINDOW SWITCH 14P CONNECTOR

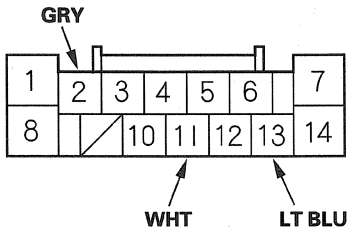

Wire side of female terminals

27. Inspect the connector and socket terminals to be sure they are all making good contact.
    - If the terminals are bent, loose or corroded, repair them as necessary and recheck the system.
    - If the terminals look OK, go to step 28.
28. With the connector still disconnected, do these input tests at the following connector.
    - If any test indicates a problem, find and correct the cause, then recheck the system.
    - If all the input tests prove OK, go to step 29.

Cavity	Wire	Test condition	Test: Desired result	Possible cause if desired result is not obtained
11*	WHT	Under all conditions	Measure the voltage to ground: There should be battery voltage.	• Blown No. 15 (40 A) fuse in the under-hood fuse/relay box • Blown No. 6 (7.5 A) fuse in the driver's under-dash fuse/relay box • Faulty driver's under-dash fuse/relay box • An open in the wire
13*	LT BLU	Right rear door open	Measure the voltage to ground: There should be less than 0.2 V.	• Faulty right rear door switch • An open in the wire
		Right rear door closed	Measure the voltage to ground: There should be at least 5 V.	• Faulty right rear door switch • A short to ground in the wire
2	GRY	Driver's under-dash fuse/relay box connector X (39P) and passenger's MPCS unit connector A (28P) disconnected	Check for continuity between terminal No. 2 and driver's under-dash fuse/relay box connector X (39P) terminal No. 15: There should be continuity.	• Faulty passenger's under-dash fuse/relay box • An open in the wire
			Check for continuity to ground: There should be no continuity.	• Faulty passenger's under-dash fuse/relay box • A short to ground in the wire

*: Reconnect the right rear power window switch 14P connector.

29. If multiple failures are found on more than one control unit, replace the driver's under-dash fuse/relay box (includes the MICU) (see page 22-88). If input failures are related to a particular control unit, replace the control unit.

Ignition Key Switch Test

1. Remove the driver's dashboard undercover (see page 20-100), and the driver's dashboard lower cover (see page 20-100), then remove the steering column covers (see page 17-25).
2. Disconnect the 10P connector (A) from the ignition switch control unit.

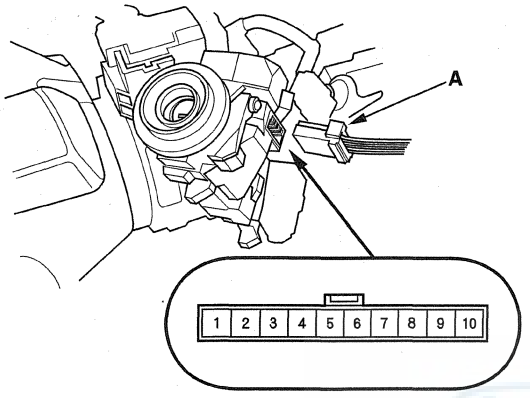

3. Check for continuity between terminals No. 3 and No. 6.
   - There should be continuity with the key in the ignition switch.
   - There should be no continuity with the key removed.
4. If the continuity is not as specified, replace the ignition switch control unit.

Ignition Key Light Test

1. Remove the driver's dashboard undercover (see page 20-100), and the driver's dashboard lower cover (see page 20-100), then remove the steering column covers (see page 17-25).
2. Disconnect the 10P connector (A) from the ignition switch control unit.

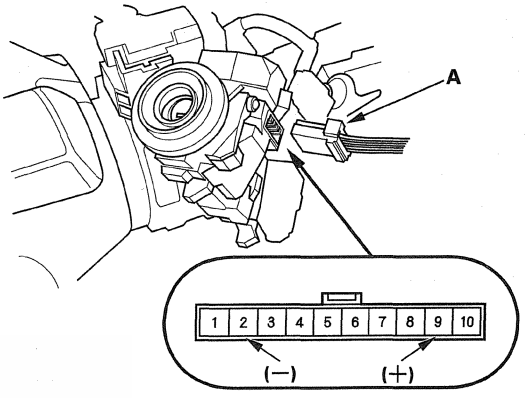

3. The LED should come on when power is connected to terminal No. 9 and ground is connected to terminal No. 2.
4. If the LED does not come on, replace the ignition switch control unit (see page 22-98).
5. Resister the new ignition switch control unit (see page 22-629).

HomeLink Remote Control System

Circuit Diagram

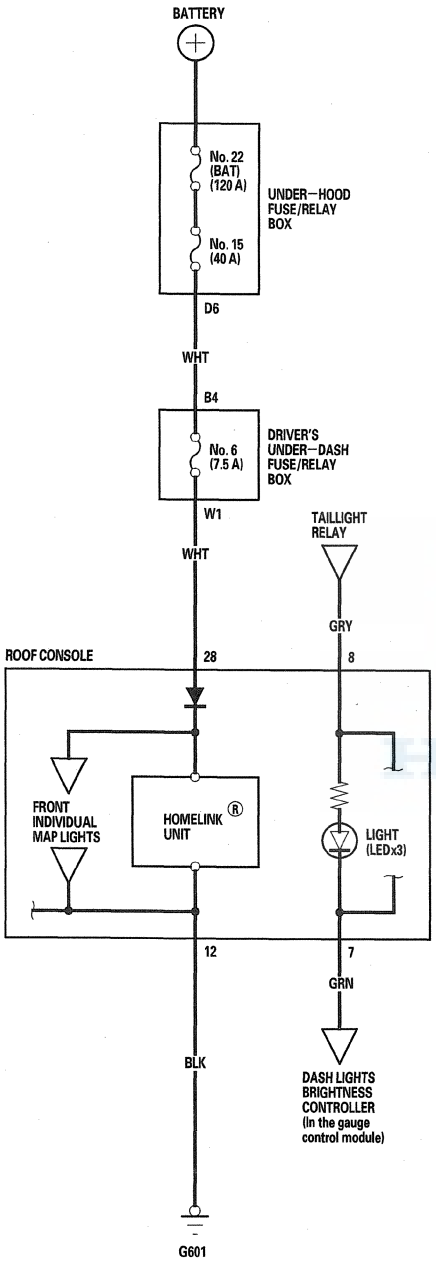

Test

NOTE:
- Explain to the client that garage door remote transmitters come in two types: fixed code and rolling code. Each type has its own programming method, and each method is covered in the owner's manual. If the client has concerns about the HomeLink unit, have the client contact the HomeLink the assistance desk at 800-355-3515.
- If the HomeLink will not open the client's garage, do the following procedures.

1. Press any of the buttons on the HomeLink unit.
   - If the red indicator comes on, go to step 4.
   - If the red indicator does not come on, go to step 2.
2. Remove the roof console (see page 22-307).
3. Measure the voltage between terminals No. 28 (+) and No. 12 (−) of the roof console 28P connector. There should be battery voltage.
   - If the voltage is not as specified, check for these problems:
     - A blown No. 6 (7.5 A) fuse in the driver's under-dash fuse/relay box.
     - A faulty driver's under-dash fuse/relay box.
     - An open in the wire.
     - Poor ground (G 601).
   - If the voltage is specified, go to step 4.

ROOF CONSOLE 28P CONNECTOR

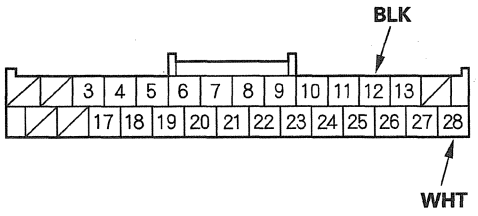

Wire side of female terminals

4. Make sure the Genie remote transmitter (test remote) has fresh batteries.

5. Clear any previously learned codes by pressing and holding the two outside buttons (A) on the HomeLink unit (B) until the red indicator (C) on the unit starts blinking (about 20 seconds), then release the buttons.

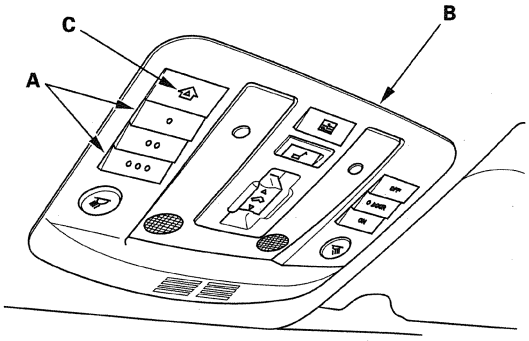

6. Point the test remote transmitter (A) straight up exactly 4.0 in (101.6 mm) away from the HomeLink unit (B).

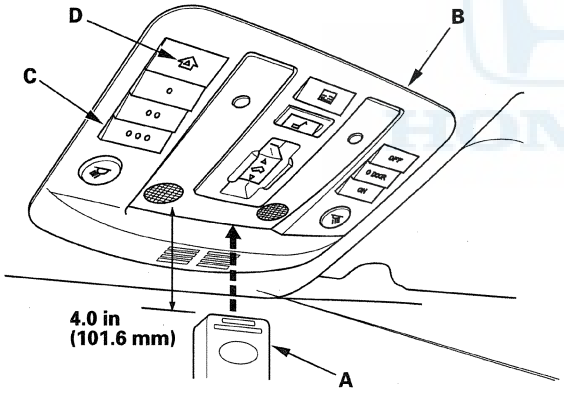

7. Press and hold the test transmitter button and one of the HomeLink unit buttons (C) at the same time.

8. Wait for about 20 seconds while watching the red indicator (D) on the HomeLink unit.

   - If the red indicator starts out blinking slowly and then blinks faster, the unit is OK. Release the buttons, then clear the learned code (see step 1). On the internet, go to www. homelink. com.
   - If the red indicator does not blink, faulty HomeLink unit; replace the roof console (see page 22-307).

HomeLink Unit Replacement

1. Remove the roof console (see page 22-307).

2. Disconnect the connector (A) from the HomeLink unit (B).

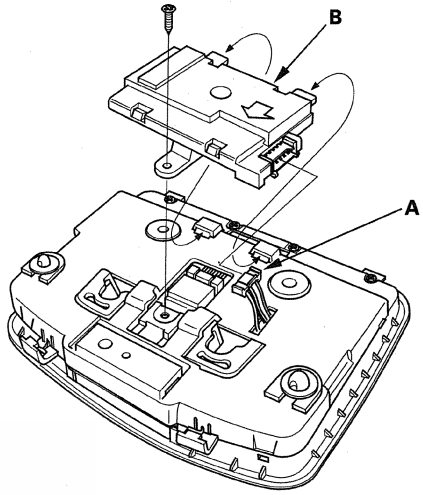

3. Remove the screw and HomeLink unit.

4. Install the parts in the reverse order of removal.

Component Location Index

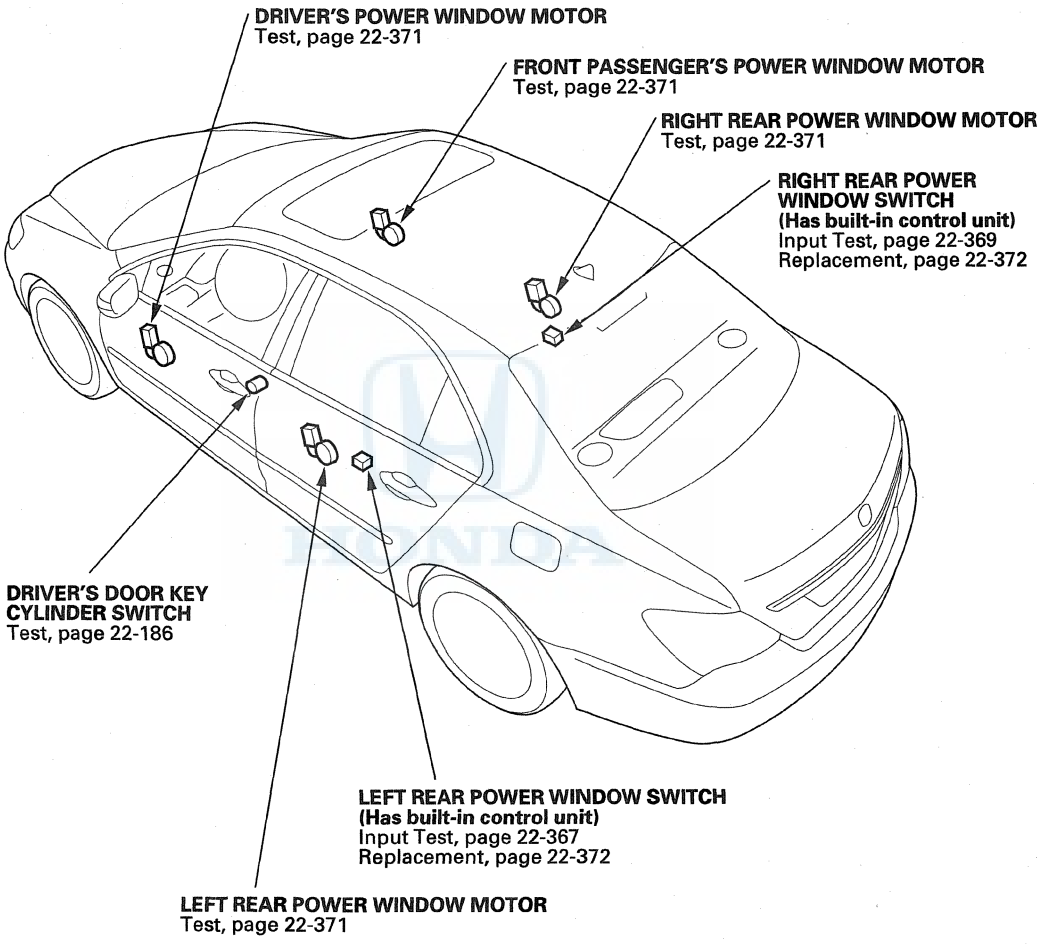

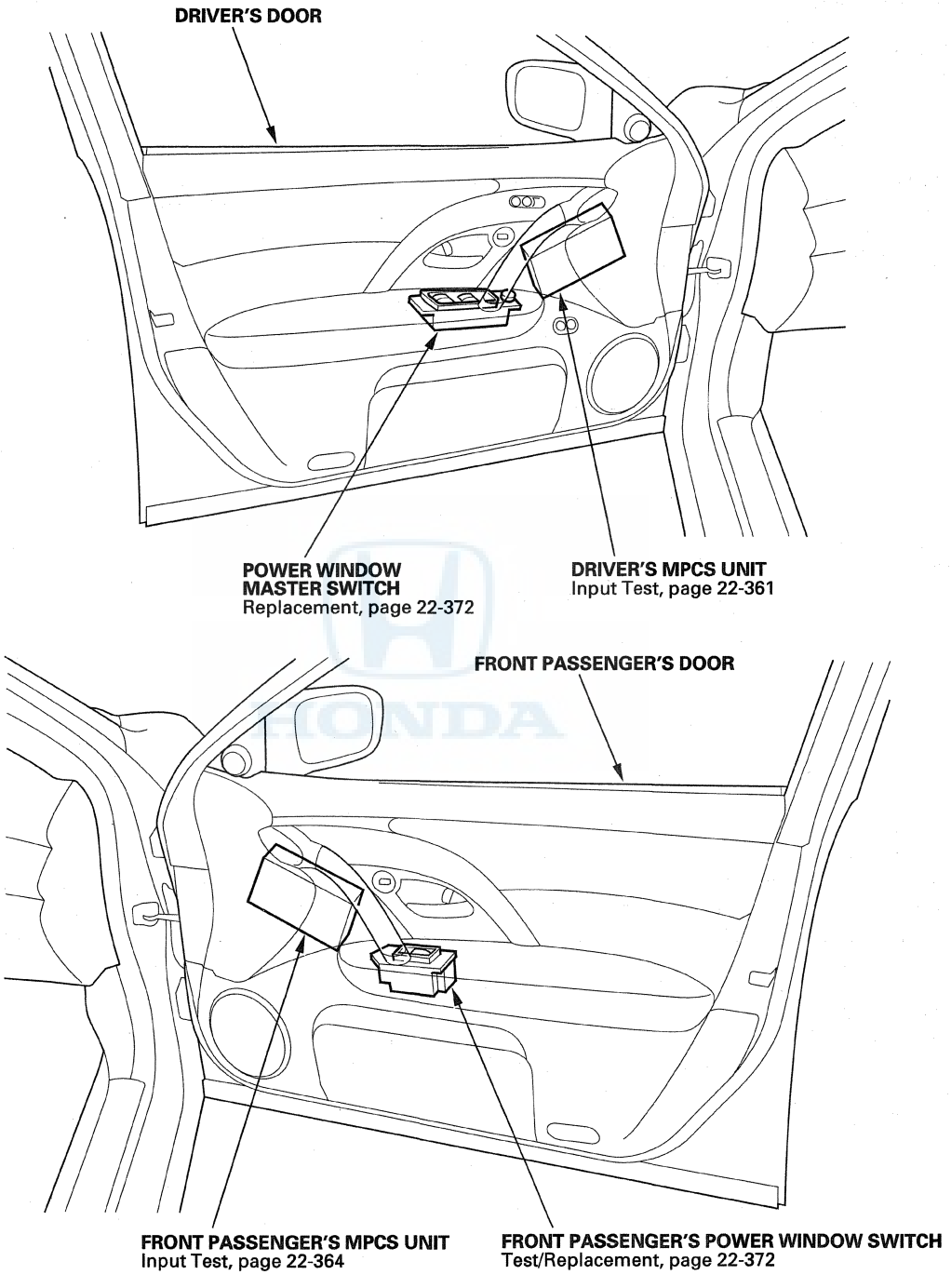
DRIVER'S DOOR
POWER WINDOW MASTER SWITCH
Replacement, page 22-372
DRIVER'S MPCS UNIT
Input Test, page 22-361
FRONT PASSENGER'S DOOR
FRONT PASSENGER'S MPCS UNIT
Input Test, page 22-364
FRONT PASSENGER'S POWER WINDOW SWITCH
Test/Replacement, page 22-372

System Description

Auto Reverse Power Window Operation

The system is composed of the driver's MPCS unit, the front passenger's MPCS unit, the power window master switch, the passenger's power window switch, and the power window motors.
The rear power window switches have built-in control units.

The power window motor incorporates a Hall IC unit (pulser) which generates pulses during the motor's operation and sends pulses to the power window control unit. As soon as the power window control unit detects a change in pulse frequency from the Hall IC unit (pulser), the power window control unit makes the power window motor stop and reverse. This prevents pinching your hand or fingers during auto-up operation. The auto reverse function does not work when the driver's window switch is held in the up position.

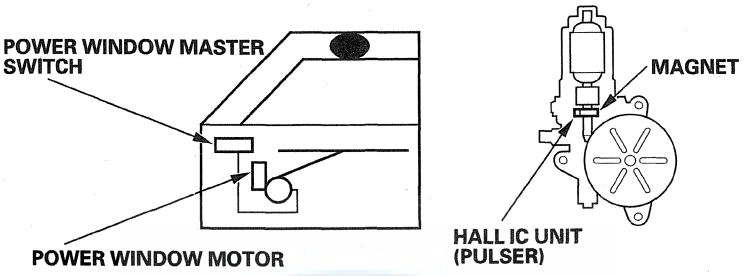

Sensor

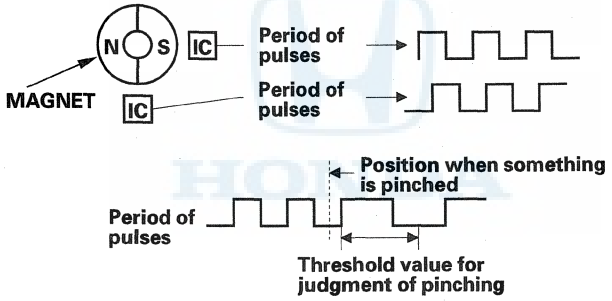

Key Cylinder Operation
With the key inserted in the driver's door key cylinder, turn the key a second time within 15 seconds and hold it to operate the power windows and moonroof (clockwise to open, counterclockwise to close). The power windows and moonroof stop moving when the key is released. The anti-pinch operation is not active when closing the power windows and moonroof with the key cylinder.

Keyless Operation
By pressing the UNLOCK button of the remote a second time within 15 seconds and hold, the power windows and moonroof open. The power windows and moonroof stop moving when the UNLOCK button is released. The power windows do not close with the LOCK button.

Resetting the Power Window Control Unit

Reset the power windows after doing any of the following actions:

- Power window regulator replacement, removal/installation, or repair
- Power window motor replacement, removal/installation, or repair
- Window run channel replacement or removal/installation
  - Driver's MPCS unit replacement or repair
  - Front passenger's MPCS unit replacement or repair
  - Rear power window switch replacement
- Door glass replacement, removal/installation, or repair
- Power is removed from the driver's power window master switch or front passenger's power window switch while the power window timer is ON.

*: With front passenger's power window AUTO UP/AUTO DOWN function

NOTE: If the front passenger's power window has lost power when the key off timer is ON, it cannot be operated from the driver's switch and must be reset from the front passenger's power window switch.

Using the HDS

1. Connect the HDS to the data link connector.
2. Turn the ignition switch to ON (II), then enter the vehicle's VIN and mileage at the prompts.
3. Select BODY ELECTRICAL from the menu.
4. From the BODY ELECTRICAL menu, select POWER WINDOWS.
5. From the MODE menu, select ADJUSTMENT.
6. From the ADJUSTMENT menu, select WINDOW RESET for driver's side (passenger's side) window.
7. Follow the prompts on the screen.
8. Confirm that the power window control unit is reset by using the power window AUTO UP and AUTO DOWN function.

Without the HDS

NOTE:
- Do each bullet in step 4 within 5 seconds of each other.
- The front passenger's power window must be retest from the front passenger's power window switch.

1. Turn the ignition switch to ON (II).
2. Move the power window all the way down by using the power window DOWN switch.
3. Open the driver's door.
4. Do the following three times before going to step 5:
   - Turn the ignition switch to LOCK (0).
   - Push and hold the power window DOWN switch.
   - Turn the ignition switch to ON (II).
   - Release the power window DOWN switch.
5. Confirm that AUTO UP no longer works. If AUTO UP still works, go back to step 1.
6. Move the power window all the way down using the power window DOWN switch.
7. Pull up and hold the power window UP switch until the power window is all the way up, then continue to hold the switch for at least 1 second.
8. Confirm that the power window control unit is reset by using the power window AUTO UP and AUTO DOWN function.

   If the power window still does not work in AUTO, repeat the procedure several times, paying close attention to the 5 second time limit between steps. If it still does not work, go to B-CAN System Diagnosis Test Mode A (see page 22-131).

Power Windows

Circuit Diagram

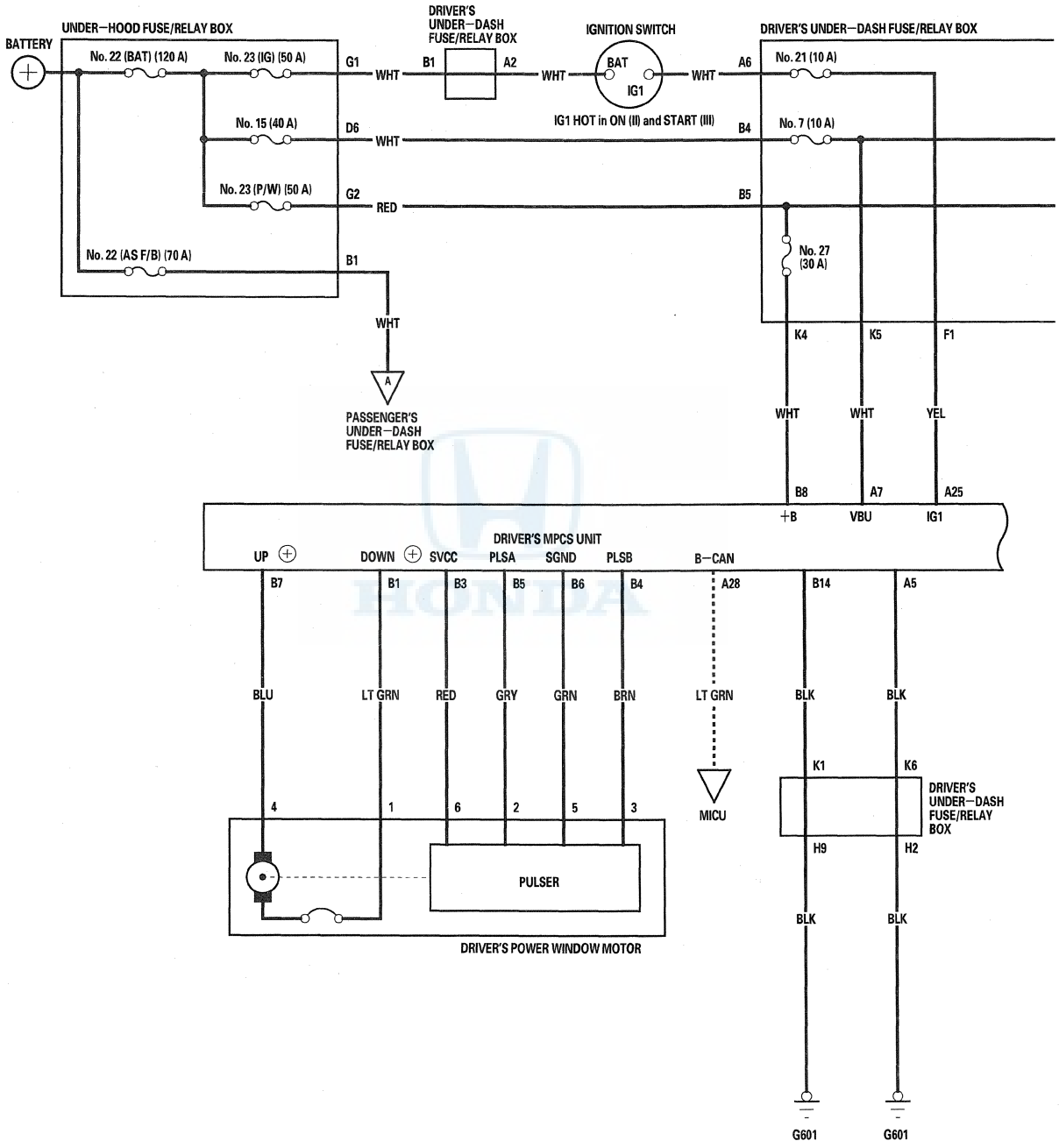

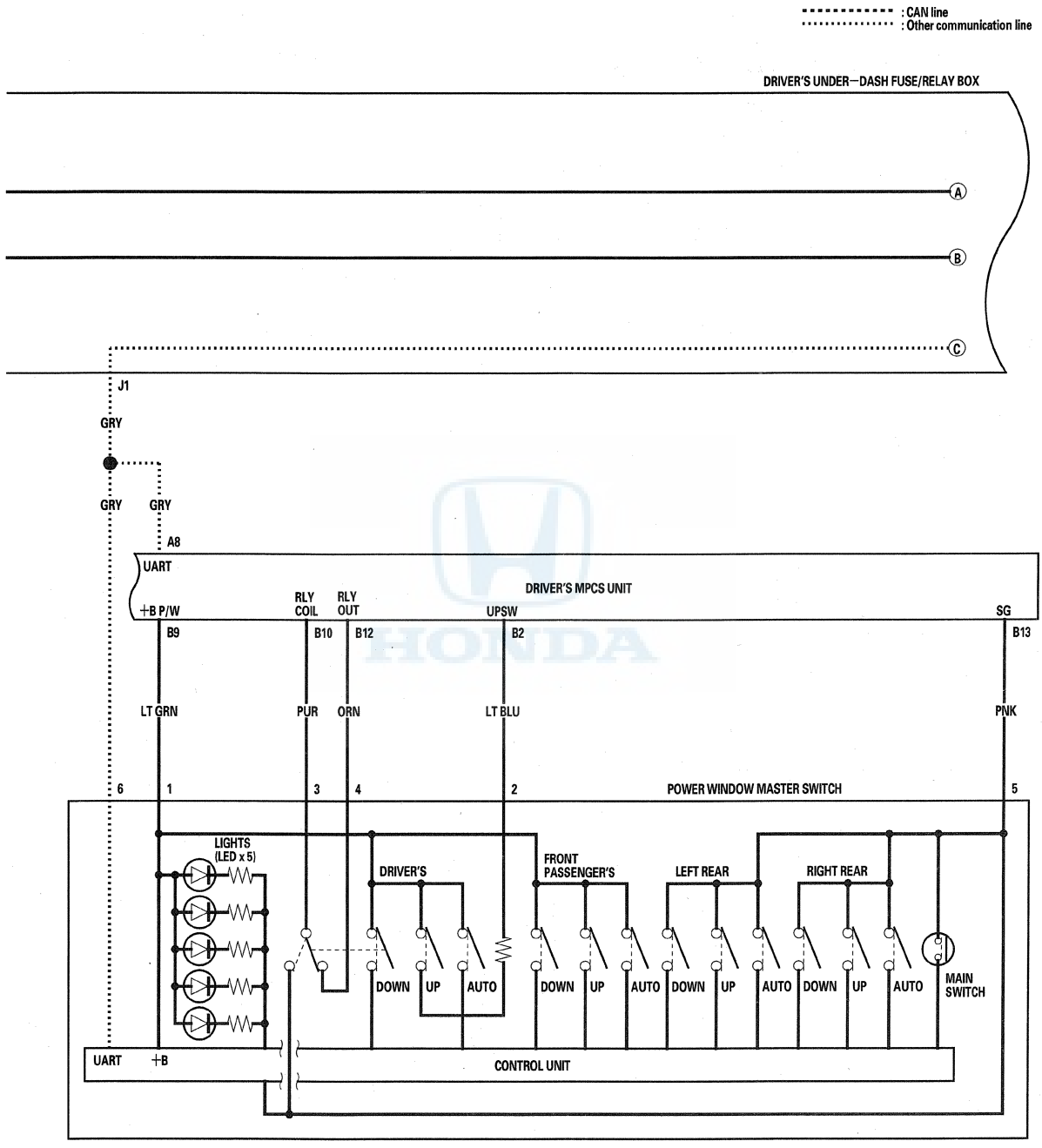
: CAN line
: Other communication line
DRIVER'S UNDER-DASH FUSE/RELAY BOX
A
B
C
J1
GRY
GRY
GRY
A8
UART
DRIVER'S MPCS UNIT
+B P/W
RLY COIL
RLY OUT
UPSW
SG
B9
B10
B12
B2
B13
LT GRN
PUR
ORN
LT BLU
PNK
6
1
3
4
2
5
POWER WINDOW MASTER SWITCH
LIGHTS (LED x 5)
DRIVER'S
FRONT PASSENGER'S
LEFT REAR
RIGHT REAR
DOWN
UP
AUTO
MAIN SWITCH
UART
+B
CONTROL UNIT

(cont'd)

Circuit Diagram (cont'd)

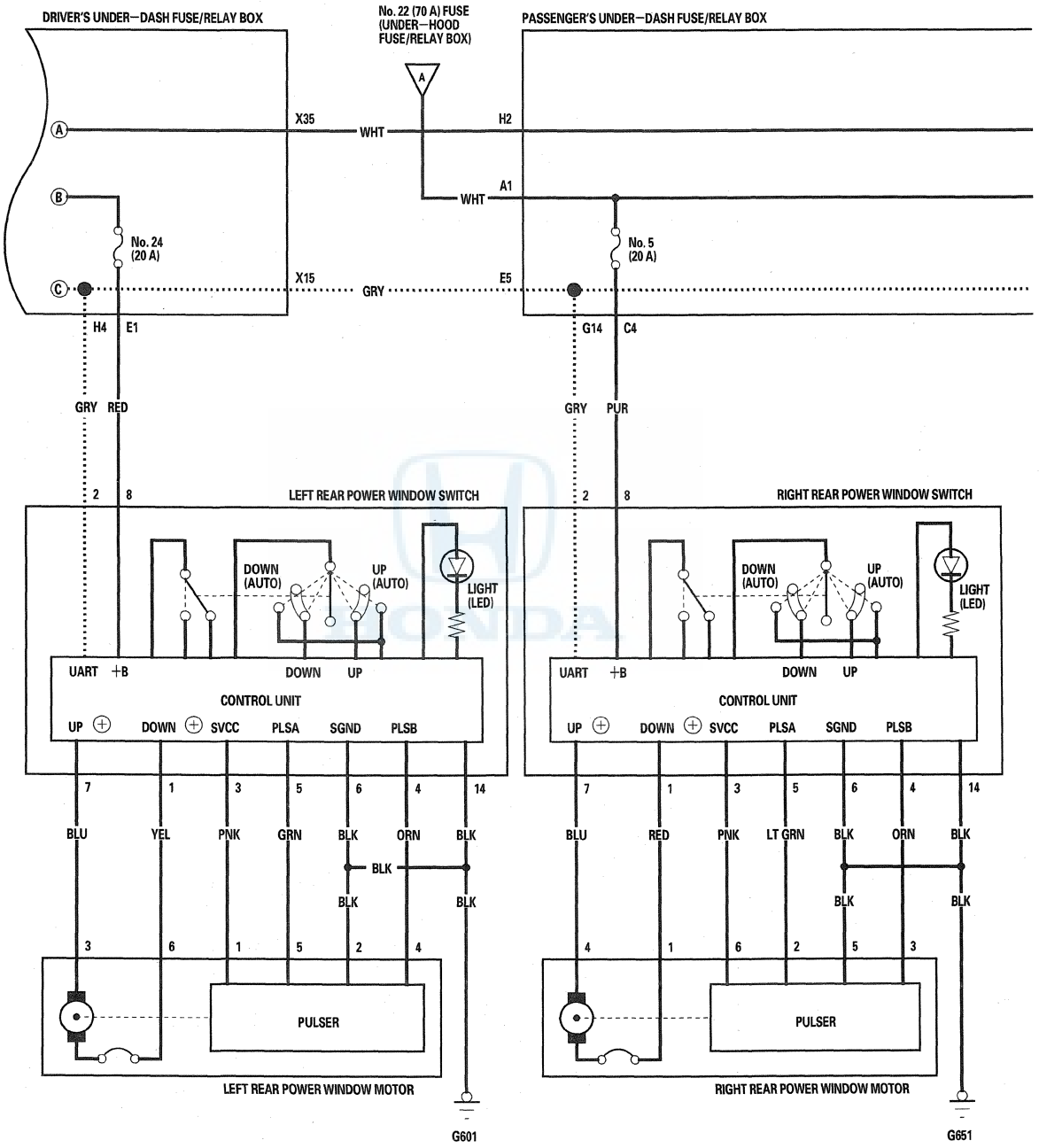

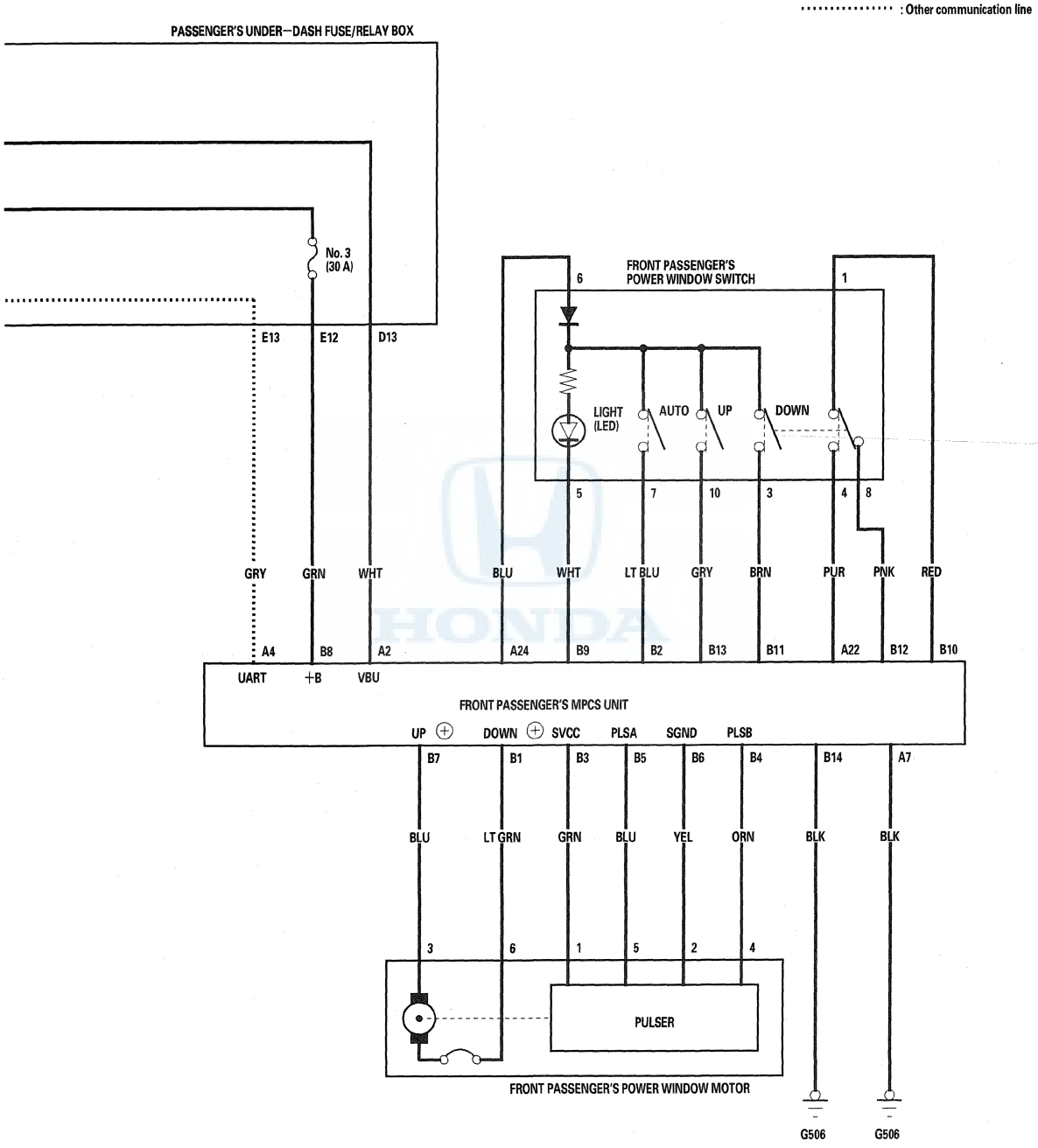
: Other communication line
PASSENGER'S UNDER-DASH FUSE/RELAY BOX
No. 3
(30 A)
E13
E12
D13
FRONT PASSENGER'S
POWER WINDOW SWITCH
6
1
LIGHT
(LED)
AUTO
UP
DOWN
5
7
10
3
4
8
GRY
GRN
WHT
BLU
WHT
LT BLU
GRY
BRN
PUR
PNK
RED
A4
B8
A2
A24
B9
B2
B13
B11
A22
B12
B10
UART
+B
VBU
FRONT PASSENGER'S MPCS UNIT
UP
DOWN
SVCC
PLSA
SGND
PLSB
B7
B1
B3
B5
B6
B4
B14
A7
BLU
LT GRN
GRN
BLU
YEL
ORN
BLK
BLK
3
6
1
5
2
4
PULSER
FRONT PASSENGER'S POWER WINDOW MOTOR
G506
G506

DTC Troubleshooting

DTC B1132: Left Rear Power Window Motor Pulse A Error

NOTE: If you are troubleshooting multiple DTCs, be sure to follow the instructions in B-CAN System Diagnosis Test Mode A (see page 22-131).

1. Clear the DTCs with the HDS.
2. Turn the ignition switch to LOCK (0) and then back to ON (II).
3. Open and close the left rear power window by using the left rear power window switch manually.
4. Check for DTCs with the HDS.

   Is DTC B1132 indicated?

   YES—Go to step 5.

   NO—Intermittent failure, the system is OK at this time. Check for loose or poor connections. ■
5. Open and close the left rear power window by using the power window master switch manually.

   Does the window motor operate?

   YES—Go to step 6.

   NO—Test the left rear power window motor (see page 22-371). If the motor tests OK, go to step 6.
6. Select POWER WINDOWS from the BODY ELECTRICAL menu and enter DATA LIST.
7. Check the DETECT/NONE information of the left rear window motor A-phase pulse signal in the DATA LIST.

   Does the information indicator display DETECT while the window is moving, and display NONE when the window is stopped?

   YES—Replace the left rear power window switch. ■

   NO—Go to step 8.
8. Check for DTCs with the HDS.

   Is DTC B1133 also indicated?

   YES—Go to step 15.

   NO—Go to step 9.
9. Turn the ignition switch to LOCK (0).
10. Disconnect the 14P connector from the left rear power window switch.
11. Disconnect the 6P connector from the left rear power window motor.
12. Check for continuity between left rear power window switch 14P connector terminal No. 5 and left rear power window motor 6P connector terminal No. 5.

LEFT REAR POWER WINDOW MOTOR 6P CONNECTOR
Wire side of female terminals

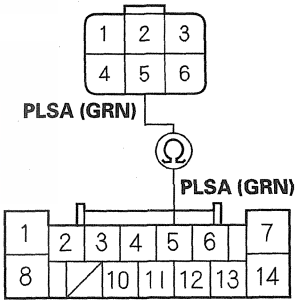

LEFT REAR POWER WINDOW SWITCH 14P CONNECTOR
Wire side of female terminals

Is there continuity?

YES—Go to step 13.

NO—Repair an open in the wire. ■

13. Check for continuity between left rear power window motor 6P connector terminal No. 5 and body ground.

LEFT REAR POWER WINDOW MOTOR 6P CONNECTOR

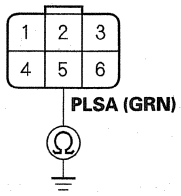

Wire side of female terminals

Is there continuity?

YES—Repair a short to ground in the wire. ■

NO—Go to step 14.

14. Test the left rear power window motor (see page 22-371).

Is the motor OK?

YES—Replace the left rear power window switch. ■

NO—Replace the left rear power window motor. ■

15. Check for continuity between left rear power window switch 14P connector terminal No. 6 and body ground.

LEFT REAR POWER WINDOW SWITCH 14P CONNECTOR

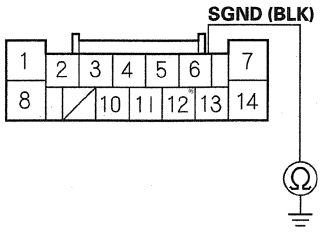

Wire side of female terminals

Is there continuity?

YES—Go to step 16.

NO—Repair an open in the wire or poor ground (G601). ■

16. Check for continuity between left rear power window switch 14P connector terminal No. 3 and left rear power window motor 6P connector terminal No. 1 respectively.

LEFT REAR POWER WINDOW MOTOR 6P CONNECTOR
Wire side of female terminals

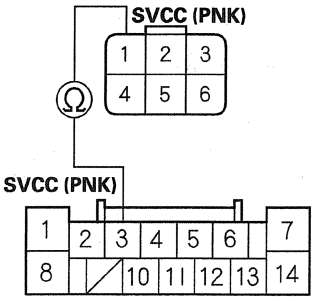

LEFT REAR POWER WINDOW SWITCH 14P CONNECTOR
Wire side of female terminals

Is there continuity?

YES—Go to step 17.

NO—Repair an open in the wire. ■

17. Check for continuity between left rear power window motor 6P connector terminal No. 1 and body ground.

LEFT REAR POWER WINDOW MOTOR 6P CONNECTOR

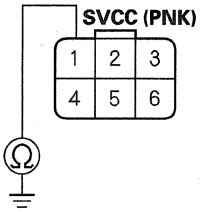

Wire side of female terminals

Is there continuity?

YES—Repair a short to ground in the wire. ■

NO—Replace the left rear power window motor. ■

DTC Troubleshooting (cont'd)

DTC B1133: Left Rear Power Window Motor Pulse B Error

NOTE: If you are troubleshooting multiple DTCs, be sure to follow the instructions in B-CAN System Diagnosis Test Mode A (see page 22-131).

1. Clear the DTCs with the HDS.
2. Turn the ignition switch to LOCK (0) and then back to ON (II).
3. Open and close the left rear power window by using the left rear power window switch manually.
4. Check for DTCs with the HDS.

   Is DTC B1133 indicated?

   YES—Go to step 5.

   NO—Intermittent failure, the system is OK at this time. Check for loose or poor connections. ■
5. Open and close the left rear power window by using the power window master switch manually.

   Does the window motor operate?

   YES—Go to step 6.

   NO—Test the left rear power window motor (see page 22-371). If the motor tests OK, go to step 6.
6. Select POWER WINDOWS from the BODY ELECTRICAL menu and enter DATA LIST.
7. Check the DETECT/NONE information of the left rear window motor B-phase pulse signal in the DATA LIST.

   Does the information indicator display DETECT while the window is moving, and display NONE when the window is stopped?

   YES—Replace the left rear power window switch. ■

   NO—Go to step 8.
8. Check for DTCs with the HDS.

   Is DTC B1132 also indicated?

   YES—Go to step 15.

   NO—Go to step 9.
9. Turn the ignition switch to LOCK (0).
10. Disconnect the 14P connector from the left rear power window switch.
11. Disconnect the 6P connector from the left rear power window motor.
12. Check for continuity between left rear power window switch 14P connector terminal No. 4 and left rear power window motor 6P connector terminal No. 4.

LEFT REAR POWER WINDOW MOTOR 6P CONNECTOR
Wire side of female terminals

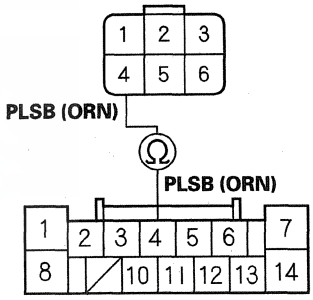

LEFT REAR POWER WINDOW SWITCH 14P CONNECTOR
Wire side of female terminals

Is there continuity?

YES—Go to step 13.

NO—Repair an open in the wire. ■

13. Check for continuity between left rear power window motor 6P connector terminal No. 4 and body ground.

LEFT REAR POWER WINDOW MOTOR 6P CONNECTOR

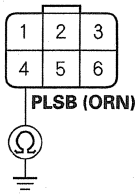

Wire side of female terminals

Is there continuity?

YES—Repair a short to ground in the wire. ■

NO—Go to step 14.

14. Test the left rear power window motor (see page 22-371).

Is the motor OK?

YES—Replace the left rear power window switch. ■

NO—Replace the left rear power window motor. ■

15. Check for continuity between left rear power window switch 14P connector terminal No. 6 and body ground.

LEFT REAR POWER WINDOW SWITCH 14P CONNECTOR

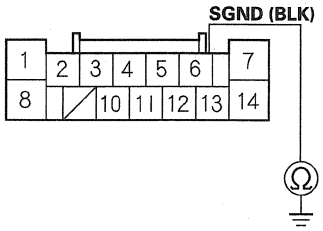

Wire side of female terminals

Is there continuity?

YES—Go to step 16.

NO—Repair an open in the wire or poor ground (G601). ■

16. Check for continuity between left rear power window switch 14P connector terminal No. 3 and left rear power window motor 6P connector terminal No. 1 respectively.

LEFT REAR POWER WINDOW MOTOR 6P CONNECTOR
Wire side of female terminals

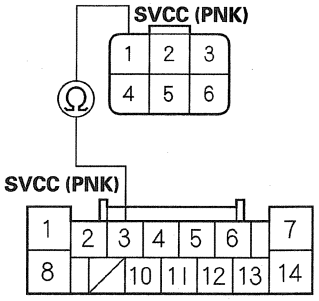

LEFT REAR POWER WINDOW SWITCH 14P CONNECTOR
Wire side of female terminals

Is there continuity?

YES—Go to step 17.

NO—Repair an open in the wire. ■

17. Check for continuity between left rear power window motor 6P connector terminal No. 1 and body ground.

LEFT REAR POWER WINDOW MOTOR 6P CONNECTOR

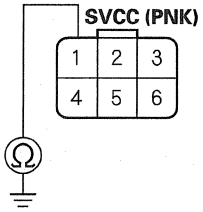

Wire side of female terminals

Is there continuity?

YES—Repair a short to ground in the wire. ■

NO—Replace the left rear power window motor. ■

DTC Troubleshooting (cont'd)

DTC B1134: Right Rear Power Window Motor Pulse A Error

NOTE: If you are troubleshooting multiple DTCs, be sure to follow the instructions in B-CAN System Diagnosis Test Mode A (see page 22-131).

1. Clear the DTCs with the HDS.
2. Turn the ignition switch to LOCK (0) and then back to ON (II).
3. Open and close the right rear power window by using the right rear power window switch manually.
4. Check for DTCs with the HDS.

   Is DTC B1134 indicated?

   YES—Go to step 5.

   NO—Intermittent failure, the system is OK at this time. Check for loose or poor connections. ■
5. Open and close the right rear power window by using the power window master switch manually.

   Does the window motor operate?

   YES—Go to step 6.

   NO—Test the right rear power window motor (see page 22-371). If the motor tests OK, go to step 6.
6. Select POWER WINDOWS from the BODY ELECTRICAL menu and enter DATA LIST.
7. Check the DETECT/NONE information of the right rear window motor A-phase pulse signal in the DATA LIST.

   Does the information indicator display DETECT while the window is moving, and display NONE when the window is stopped?

   YES—Replace the right rear power window switch. ■

   NO—Go to step 8.
8. Check for DTCs with the HDS.

   Is DTC B1135 also indicated?

   YES—Go to step 15.

   NO—Go to step 9.
9. Turn the ignition switch to LOCK (0).
10. Disconnect the 14P connector from the right rear power window switch.
11. Disconnect the 6P connector from the right rear power window motor.
12. Check for continuity between right rear power window switch 14P connector terminal No. 5 and right rear power window motor 6P connector terminal No. 2.

RIGHT REAR POWER WINDOW MOTOR 6P CONNECTOR
Wire side of female terminals

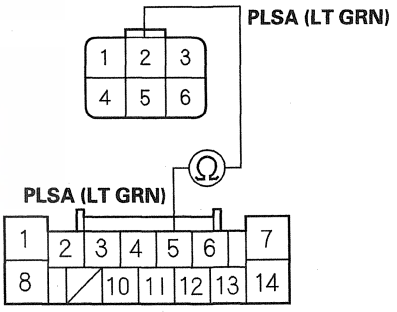

RIGHT REAR POWER WINDOW SWITCH 14P CONNECTOR
Wire side of female terminals

Is there continuity?

YES—Go to step 13.

NO—Repair an open in the wire. ■

13. Check for continuity between right rear power window motor 6P connector terminal No. 2 and body ground.

RIGHT REAR POWER WINDOW MOTOR 6P CONNECTOR

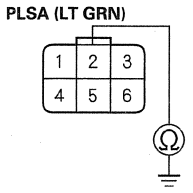

Wire side of female terminals

Is there continuity?

YES—Repair short to ground in the wire. ■

NO—Go to step 14.

14. Test the right rear power window motor (see page 22-371).

Is the motor OK?

YES—Replace the right rear power window switch. ■

NO—Replace the right rear power window motor. ■

15. Check for continuity between right rear power window switch 14P connector terminal No. 6 and body ground.

RIGHT REAR POWER WINDOW SWITCH 14P CONNECTOR

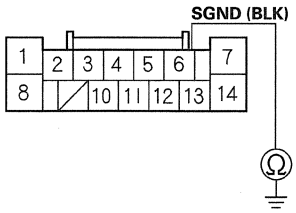

Wire side of female terminals

Is there continuity?

YES—Go to step 16.

NO—Repair an open in the wire or poor ground (G651). ■

16. Check for continuity between right rear power window switch 14P connector terminal No. 3 and right rear power window motor 6P connector terminal No. 6 respectively.

RIGHT REAR POWER WINDOW MOTOR 6P CONNECTOR
Wire side of female terminals

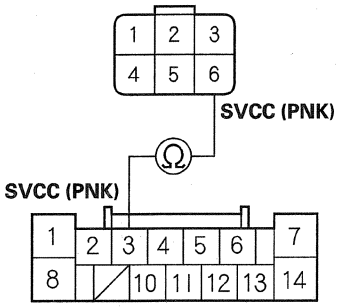

RIGHT REAR POWER WINDOW SWITCH 14P CONNECTOR
Wire side of female terminals

Is there continuity?

YES—Go to step 17.

NO—Repair an open in the wire. ■

17. Check for continuity between right rear power window motor 6P connector terminal No. 6 and body ground.

RIGHT REAR POWER WINDOW MOTOR 6P CONNECTOR

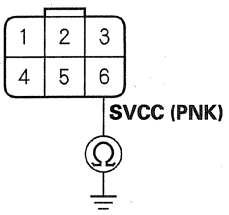

Wire side of female terminals

Is there continuity?

YES—Repair a short to ground in the wire. ■

NO—Replace the right rear power window motor. ■

DTC Troubleshooting (cont'd)

DTC B1135: Right Rear Power Window Motor Pulse B Error

NOTE: If you are troubleshooting multiple DTCs, be sure to follow the instructions in B-CAN System Diagnosis Test Mode A (see page 22-131).

1. Clear the DTCs with the HDS.
2. Turn the ignition switch to LOCK (0) and then back to ON (II).
3. Open and close the right rear power window by using the right rear power window switch manually.
4. Check for DTCs with the HDS.

   Is DTC B1135 indicated?

   YES—Go to step 5.

   NO—Intermittent failure, the system is OK at this time. Check for loose or poor connections. ■
5. Open and close the right rear power window by using the power window master switch manually.

   Does the window motor operate?

   YES—Go to step 6.

   NO—Test the right rear power window motor (see page 22-371). If the motor tests OK, go to step 6.
6. Select POWER WINDOWS from the BODY ELECTRICAL menu and enter DATA LIST.
7. Check the DETECT/NONE information of the right rear window motor B-phase pulse signal in the DATA LIST.

   Does the information indicator display DETECT while the window is moving, and display NONE when the window is stopped?

   YES—Replace the right rear power window switch. ■

   NO—Go to step 8.
8. Check for DTCs with the HDS.

   Is DTC B1134 also indicated?

   YES—Go to step 15.

   NO—Go to step 9.
9. Turn the ignition switch to LOCK (0).
10. Disconnect the 14P connector from the right rear power window switch.
11. Disconnect the 6P connector from the right rear power window motor.
12. Check for continuity between right rear power window switch 14P connector terminal No. 4 and right rear power window motor 6P connector terminal No. 3.

RIGHT REAR POWER WINDOW MOTOR 6P CONNECTOR
Wire side of female terminals

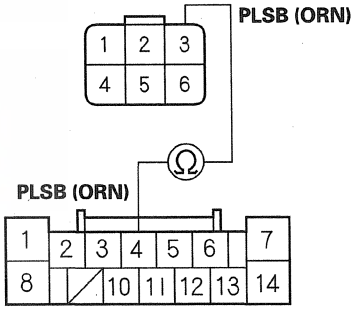

RIGHT REAR POWER WINDOW SWITCH 14P CONNECTOR
Wire side of female terminals

Is there continuity?

YES—Go to step 13.

NO—Repair an open in the wire. ■

13. Check for continuity between right rear power window motor 6P connector terminal No. 3 and body ground.

RIGHT REAR POWER WINDOW MOTOR 6P CONNECTOR

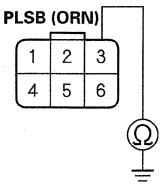

Wire side of female terminals

Is there continuity?

YES—Repair a short to ground in the wire. ■

NO—Go to step 14.

14. Test the right rear power window motor (see page 22-371).

Is the motor OK?

YES—Replace the right rear power window switch. ■

NO—Replace the right rear power window motor. ■

15. Check for continuity between right rear power window switch 14P connector terminal No. 6 and body ground.

RIGHT REAR POWER WINDOW SWITCH 14P CONNECTOR

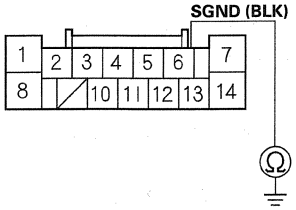

Wire side of female terminals

Is there continuity?

YES—Go to step 16.

NO—Repair an open in the wire or poor ground (G651). ■

16. Check for continuity between right rear power window switch 14P connector terminal No. 3 and right rear power window motor 6P connector terminal No. 6 respectively.

RIGHT REAR POWER WINDOW MOTOR 6P CONNECTOR
Wire side of female terminals

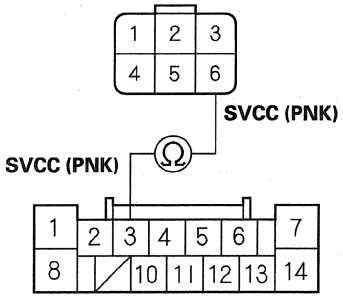

RIGHT REAR POWER WINDOW SWITCH 14P CONNECTOR
Wire side of female terminals

Is there continuity?

YES—Go to step 17.

NO—Repair an open in the wire. ■

17. Check for continuity between the right rear power window motor 6P connector terminal No. 6 and body ground.

RIGHT REAR POWER WINDOW MOTOR 6P CONNECTOR

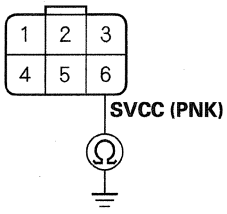

Wire side of female terminals

Is there continuity?

YES—Repair a short to ground in the wire. ■

NO—Replace the right rear power window motor. ■

DTC Troubleshooting (cont'd)

DTC B1136: Right Rear Power Window Switch Internal Error

DTC B1148: Left Rear Power Window Switch Internal Error

NOTE:
- If you are troubleshooting multiple DTCs, be sure to follow the instructions in B-CAN System Diagnosis Test Mode A (see page 22-131).
- Information marked with an asterisk (*) applies to the right rear power window.

1. Clear the DTCs with the HDS.
2. Turn the ignition switch to LOCK (0) and then back to ON (II).
3. Check for DTCs with the HDS.

   Is DTC B1136 or B1148 indicated?*

   YES—Replace the left (right)* rear power window switch. ■

   NO—Intermittent failure, the system is OK at this time. Check for loose or poor connections. ■

DTC B1147: Left Rear Power Window Position Information Error

DTC B1149: Right Rear Power Window Position Information Error

NOTE:
- If you are troubleshooting multiple DTCs, be sure to follow the instructions in B-CAN System Diagnosis Test Mode A (see page 22-131).
- Information marked with an asterisk (*) applies to the right rear power window.

1. Clear the DTCs with the HDS.
2. Turn the ignition switch to LOCK (0) and then back to ON (II).
3. Open and close the left (right)* rear power window by using the left (right)* rear power window switch manually.
4. Check for DTCs with the HDS.

   Is DTC B1132 or B1133 (B1133 or B1134) also indicated?*

   YES—Troubleshoot the indicated DTC(s) first. ■

   NO—Go to step 5.
5. Reset the power window control unit (see page 22-331).
6. Clear the DTCs with the HDS.
7. Turn the ignition switch to LOCK (0) and then back to ON (II).
8. Open and close the left (right)* rear power window by using the left (right)* rear power window switch manually.
9. Check for DTCs with the HDS.

   Is DTC B1147 (B1149) indicated?*

   YES—Go to step 10.

   NO—The system is OK at this time. ■

10. Turn the ignition switch to LOCK (0).
11. Substitute a known-good left (right)* rear power window switch.
12. Clear the DTCs with the HDS.
13. Turn the ignition switch to LOCK (0) and then back to ON (II).
14. Open and close the left (right)* rear power window by using the left (right)* rear power window switch manually.
15. Check for DTCs with the HDS.

    Is DTC B1147 (B1149) indicated?*

    YES—Replace the left (right)* rear power window motor. ■

    NO—Replace the left (right)* rear power window switch. ■

DTC Troubleshooting (cont'd)

DTC B2175: Driver's Power Window Motor Pulse A Error

NOTE: If you are troubleshooting multiple DTCs, be sure to follow the instructions in B-CAN System Diagnosis Test Mode A (see page 22-131).

1. Clear the DTCs with the HDS.
2. Turn the ignition switch to LOCK (0) and then back to ON (II).
3. Open and close the driver's power window by using the power window master switch manually.
4. Check for DTCs with the HDS.

   Is DTC B2175 indicated?

   YES—Go to step 5.

   NO—Intermittent failure, the system is OK at this time. Check for loose or poor connections. ■
5. Open and close the driver's power window by using the power window master switch manually.

   Does the window motor operate?

   YES—Go to step 6.

   NO—Test the driver's power window motor (see page 22-371). If the motor tests OK, go to step 6.
6. Select POWER WINDOWS from the BODY ELECTRICAL system select menu and enter DATA LIST.
7. Check the DETECT/NONE information of the Driver's window motor A-phase pulse signal in the DATA LIST.

   Does the information indicator display DETECT while the window is moving, and display NONE when the window is stopped?

   YES—Replace the driver's MPCS unit. ■

   NO—Go to step 8.
8. Check for DTCs with the HDS.

   Is DTC B2176 also indicated?

   YES—Go to step 15.

   NO—Go to step 9.
9. Turn the ignition switch to LOCK (0).
10. Disconnect the 14P connector from the driver's MPCS unit.
11. Disconnect the 6P connector from the driver's power window motor.
12. Check for continuity between driver's MPCS unit connector B (14P) terminal No. 5 and driver's power window motor 6P connector terminal No. 2.

DRIVER'S POWER WINDOW MOTOR 6P CONNECTOR
Wire side of female terminals

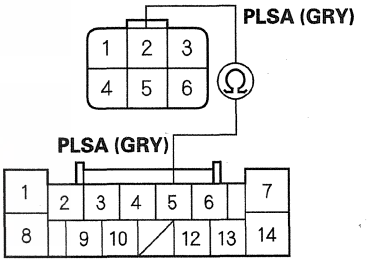

DRIVER'S MPCS UNIT CONNECTOR B (14P)
Wire side of female terminals

Is there continuity?

YES—Go to step 13.

NO—Repair an open in the wire. ■

13. Check for continuity between driver's power window motor 6P connector terminal No. 2 and body ground.

DRIVER'S POWER WINDOW MOTOR 6P CONNECTOR

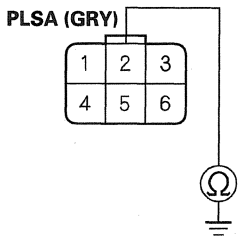

Wire side of female terminals

Is there continuity?

YES—Repair a short to ground in the wire. ■

NO—Go to step 14.

14. Test the driver's power window motor (see page 22-371).

Is the motor OK?

YES—Replace the driver's MPCS unit. ■

NO—Replace the driver's power window motor. ■

15. Check for continuity between driver's MPCS unit connector B (14P) terminals No. 3 and No. 6 and the driver's power window motor 6P connector terminals No. 5 and No. 6 respectively.

DRIVER'S POWER WINDOW MOTOR 6P CONNECTOR
Wire side of female terminals

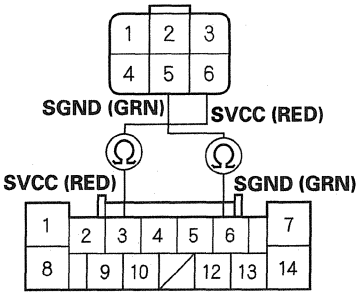

DRIVER'S MPCS UNIT CONNECTOR B (14P)
Wire side of female terminals

Is there continuity?

YES—Go to step 16.

NO—Repair an open in the wire. ■

16. Check for continuity between driver's power window motor 6P connector terminal No. 6 and body ground.

DRIVER'S POWER WINDOW MOTOR 6P CONNECTOR

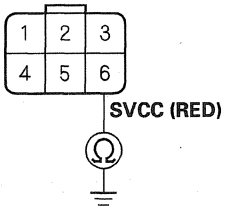

Wire side of female terminals

Is there continuity?

YES—Repair a short to ground in the wire. ■

NO—Replace the driver's power window motor. ■

DTC Troubleshooting (cont'd)

DTC B2176: Driver's Power Window Motor Pulse B Error

NOTE: If you are troubleshooting multiple DTCs, be sure to follow the instructions in B-CAN System Diagnosis Test Mode A (see page 22-131).

1. Clear the DTCs with the HDS.
2. Turn the ignition switch to LOCK (0) and then back to ON (II).
3. Open and close the driver's power window by using the power window master switch manually.
4. Check for DTCs with the HDS.

   Is DTC B2176 indicated?

   YES—Go to step 5.

   NO—Intermittent failure, the system is OK at this time. Check for loose or poor connections. ■
5. Open and close the driver's power window by using the power window master switch manually.

   Does the window motor operate?

   YES—Go to step 6.

   NO—Test the driver's power window motor (see page 22-371). If the motor tests OK, go to step 6.
6. Select POWER WINDOWS from the BODY ELECTRICAL system select menu and enter DATA LIST.
7. Check the DETECT/NONE information of the Driver's window motor B-phase pulse signal in the DATA LIST.

   Does the information indicator display DETECT while the window is moving, and display NONE when the window is stopped?

   YES—Replace the driver's MPCS unit. ■

   NO—Go to step 8.
8. Check for DTCs with the HDS.

   Is DTC B2175 also indicated?

   YES—Go to step 15.

   NO—Go to step 9.
9. Turn the ignition switch to LOCK (0).
10. Disconnect the 14P connector from the driver's MPCS unit.
11. Disconnect the 6P connector from the driver's power window motor.
12. Check for continuity between driver's MPCS unit connector B (14P) terminal No. 4 and driver's power window motor 6P connector terminal No. 3.

DRIVER'S POWER WINDOW MOTOR 6P CONNECTOR
Wire side of female terminals

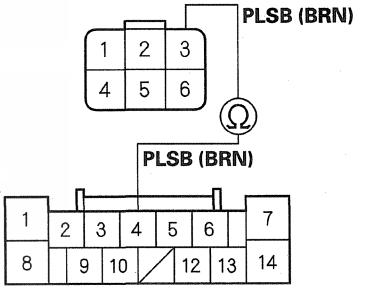

DRIVER'S MPCS UNIT CONNECTOR B (14P)
Wire side of female terminals

Is there continuity?

YES—Go to step 13.

NO—Repair an open in the wire. ■

13. Check for continuity between driver's power window motor 6P connector terminal No. 3 and body ground.

DRIVER'S POWER WINDOW MOTOR 6P CONNECTOR

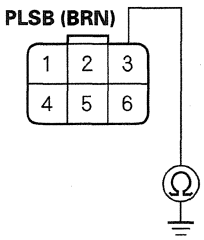

Wire side of female terminals

Is there continuity?

YES—Repair a short to ground in the wire. ■

NO—Go to step 14.

14. Test the driver's power window motor (see page 22-371).

Is the motor OK?

YES—Replace the driver's MPCS unit. ■

NO—Replace the driver's power window motor. ■

15. Check for continuity between driver's MPCS unit connector B (14P) terminals No. 3 and No. 6 and the driver's power window motor 6P connector terminals No. 5 and No. 6 respectively.

DRIVER'S POWER WINDOW MOTOR 6P CONNECTOR
Wire side of female terminals

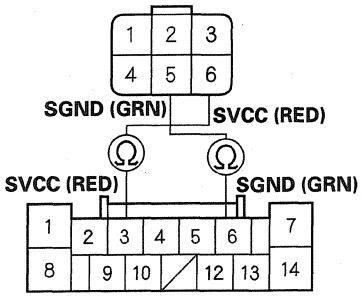

DRIVER'S MPCS UNIT CONNECTOR B (14P)
Wire side of female terminals

Is there continuity?

YES—Go to step 16.

NO—Repair an open in the wire. ■

16. Check for continuity between driver's power window motor 6P connector terminal No. 6 and body ground.

DRIVER'S POWER WINDOW MOTOR 6P CONNECTOR

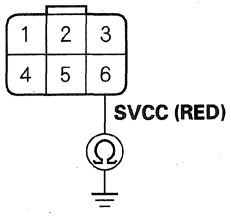

Wire side of female terminals

Is there continuity?

YES—Repair a short to ground in the wire. ■

NO—Replace the driver's power window motor. ■

DTC Troubleshooting (cont'd)

DTC B2177: Front Passenger's Power Window Motor Pulse A Error

NOTE: If you are troubleshooting multiple DTCs, be sure to follow the instructions in B-CAN System Diagnosis Test Mode A (see page 22-131).

1. Clear the DTCs with the HDS.
2. Turn the ignition switch to LOCK (0) and then back to ON (II).
3. Open and close the front passenger's power window by using the front passenger's power window switch manually.
4. Check for DTCs with the HDS.

   Is DTC B2177 indicated?

   YES—Go to step 5.

   NO—Intermittent failure, the system is OK at this time. Check for loose or poor connections. ■
5. Open and close the front passenger's power window by using the power window master switch manually.

   Does the window motor operate?

   YES—Go to step 6.

   NO—Test the front passenger's power window motor (see page 22-371). If the motor tests OK, go to step 6.
6. Select POWER WINDOWS from the BODY ELECTRICAL system select menu and enter DATA LIST.
7. Check the DETECT/NONE information of the Front passenger's window motor A-phase pulse signal in the DATA LIST.

   Does the information indicator display DETECT while the window is moving, and display NONE when the window is stopped?

   YES—Replace the front passenger's MPCS unit. ■

   NO—Go to step 8.
8. Check for DTCs with the HDS.

   Is DTC B2178 also indicated?

   YES—Go to step 15.

   NO—Go to step 9.
9. Turn the ignition switch to LOCK (0).
10. Disconnect front passenger's MPCS unit connector B (14P).
11. Disconnect the 6P connector from the front passenger's power window motor.
12. Check for continuity between front passenger's MPCS unit connector B (14P) terminal No. 5 and front passenger's power window motor 6P connector terminal No. 5.

FRONT PASSENGER'S POWER WINDOW MOTOR 6P CONNECTOR
Wire side of female terminals

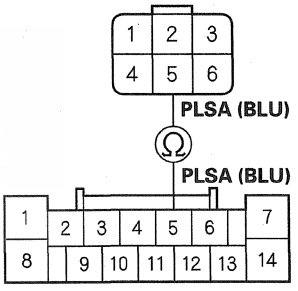

FRONT PASSENGER'S MPCS UNIT CONNECTOR B (14P)
Wire side of female terminals

Is there continuity?

YES—Go to step 13.

NO—Repair an open in the wire. ■

13. Check for continuity between front passenger's power window motor 6P connector terminal No. 5 and body ground.

FRONT PASSENGER'S POWER WINDOW MOTOR 6P CONNECTOR

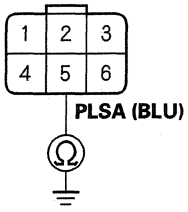

Wire side of female terminals

Is there continuity?

YES—Repair a short to ground in the wire. ■

NO—Go to step 14.

14. Test the front passenger's power window motor (see page 22-371).

Is the motor OK?

YES—Replace the front passenger's MPCS unit. ■

NO—Replace the front passenger's power window motor. ■

15. Check for continuity between front passenger's MPCS unit connector B (14P) terminals No. 3 and No. 6 and the front passenger's power window motor 6P connector terminals No. 1 and No. 2 respectively.

FRONT PASSENGER'S POWER WINDOW MOTOR 6P CONNECTOR

Wire side of female terminals

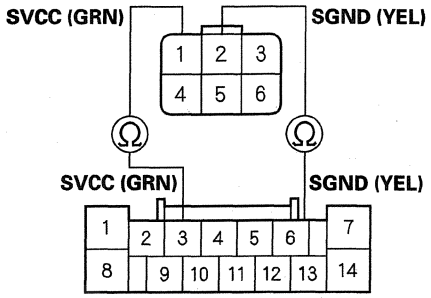

FRONT PASSENGER'S MPCS UNIT CONNECTOR B (14P)

Wire side of female terminals

Is there continuity?

YES—Go to step 16.

NO—Repair an open in the wire. ■

16. Check for continuity between front passenger's power window motor 6P connector terminal No. 1 and body ground.

FRONT PASSENGER'S POWER WINDOW MOTOR 6P CONNECTOR

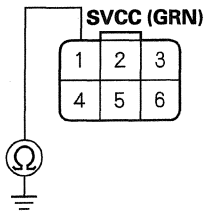

Wire side of female terminals

Is there continuity?

YES—Repair a short to ground in the wire. ■

NO—Replace the front passenger's power window motor. ■

DTC Troubleshooting (cont'd)

DTC B2178: Front Passenger's Power Window Motor Pulse B Error

NOTE: If you are troubleshooting multiple DTCs, be sure to follow the instructions in B-CAN System Diagnosis Test Mode A (see page 22-131).

1. Clear the DTCs with the HDS.
2. Turn the ignition switch to LOCK (0) and then back to ON (II).
3. Open and close the front passenger's power window by using the front passenger's power window switch manually.
4. Check for DTCs with the HDS.

   Is DTC B2178 indicated?

   YES—Go to step 5.

   NO—Intermittent failure, the system is OK at this time. Check for loose or poor connections. ■
5. Open and close the front passenger's power window by using the power window master switch manually.

   Does the window motor operate?

   YES—Go to step 6.

   NO—Test the front passenger's power window motor (see page 22-371). If the motor tests OK, go to step 6.
6. Select POWER WINDOWS from the BODY ELECTRICAL system select menu and enter DATA LIST.
7. Check the DETECT/NONE information of the Front passenger's window motor B-phase pulse signal in the DATA LIST.

   Does the information indicator display DETECT while the window is moving, and display NONE when the window is stopped?

   YES—Replace the front passenger's MPCS unit. ■

   NO—Go to step 8.
8. Check for DTCs with the HDS.

   Is DTC B2177 also indicated?

   YES—Go to step 15.

   NO—Go to step 9.
9. Turn the ignition switch to LOCK (0).
10. Disconnect front passenger's MPCS unit connector B (14P).
11. Disconnect the 6P connector from the front passenger's power window motor.
12. Check for continuity between front passenger's MPCS unit connector B (14P) terminal No. 4 and front passenger's power window motor 6P connector terminal No. 4.

FRONT PASSENGER'S POWER WINDOW MOTOR 6P CONNECTOR
Wire side of female terminals

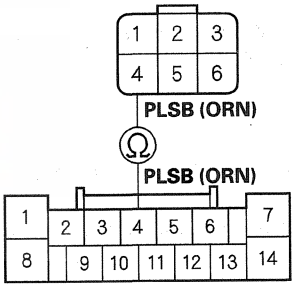

FRONT PASSENGER'S MPCS UNIT CONNECTOR B (14P)
Wire side of female terminals

Is there continuity?

YES—Go to step 13.

NO—Repair an open in the wire. ■

13. Check for continuity between front passenger's power window motor 6P connector terminal No. 4 and body ground.

FRONT PASSENGER'S POWER WINDOW MOTOR 6P CONNECTOR

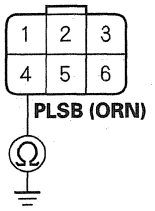

Wire side of female terminals

Is there continuity?

YES—Repair a short to ground in the wire. ■

NO—Go to step 14.

14. Test the front passenger's power window motor (see page 22-371).

Is the motor OK?

YES—Replace the front passenger's MPCS unit. ■

NO—Replace the front passenger's power window motor. ■

15. Check for continuity between front passenger's MPCS unit connector B (14P) terminals No. 3 and No. 6 and the front passenger's power window motor 6P connector terminals No. 1 and No. 2 respectively.

FRONT PASSENGER'S POWER WINDOW MOTOR 6P CONNECTOR

Wire side of female terminals

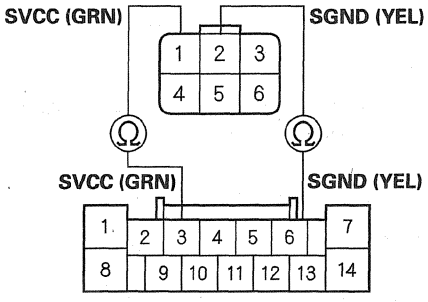

FRONT PASSENGER'S MPCS UNIT CONNECTOR B (14P)

Wire side of female terminals

Is there continuity?

YES—Go to step 16.

NO—Repair an open in the wire. ■

16. Check for continuity between front passenger's power window motor 6P connector terminal No. 1 and body ground.

FRONT PASSENGER'S POWER WINDOW MOTOR 6P CONNECTOR

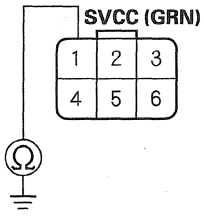

Wire side of female terminals

Is there continuity?

YES—Repair a short to ground in the wire. ■

NO—Replace the front passenger's power window motor. ■

DTC Troubleshooting (cont'd)

DTC B2187: Communication Line (UART Line) Circuit Short

NOTE: If you are troubleshooting multiple DTCs, be sure to follow the instructions in B-CAN System Diagnosis Test Mode A (see page 22-131).

1. Clear the DTCs with the HDS.
2. Turn the ignition switch to LOCK (0) and then back to ON (II).
3. Operate the front passenger's, left rear and right rear power window switches.
4. Check for DTCs with the HDS.

   Is DTC B2187 indicated?

   YES—Go to step 5.

   NO—Intermittent failure, the UART line is OK at this time. ■
5. Turn the ignition switch to LOCK (0).
6. Disconnect these connectors:
   - Driver's MPCS unit connector A (40P)
   - Power window master switch 6P connector
   - Front passenger's MPCS unit connector A (28P)
   - Left rear power window switch 14P connector
   - Right rear power window switch 14P connector
   - Moonroof motor/control unit 8P connector
7. Check for continuity between driver's MPCS unit connector A (40P) terminal No. 8 and body ground.

DRIVER'S MPCS UNIT CONNECTOR A (40P)

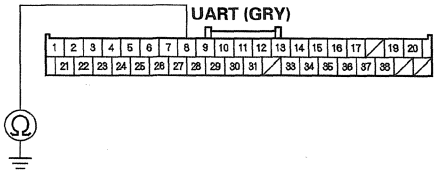

Wire side of female terminals

Is there continuity?

YES—Repair a short to ground in the wire. ■

NO—Go to step 8.

8. Turn the ignition switch to ON (II).
9. Measure the voltage between driver's MPCS unit connector A (40P) terminal No. 8 and body ground.

DRIVER'S MPCS UNIT CONNECTOR A (40P)

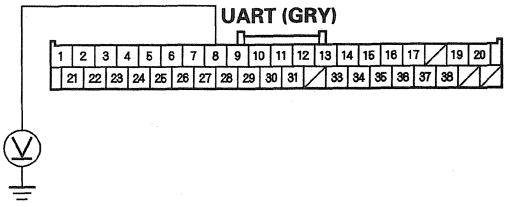

Wire side of female terminals

Is there voltage?

YES—Repair a short to power in the wire. ■

NO—Go to step 10.

10. Clear the DTCs with the HDS.
11. Turn the ignition switch to LOCK (0) and then back to ON (II).
12. Wait for at least 6 seconds.
13. Check for DTCs with the HDS.

    Is DTC B2187 indicated?

    YES—Replace the driver's MPCS unit. ■

    NO—Go to step 14.
14. Reconnect the power window master switch 6P connector.
15. Clear the DTCs with the HDS.
16. Turn the ignition switch to LOCK (0) and then back to ON (II).
17. Operate each switch of the power window master switch.

18. Check for DTCs with the HDS.

    Is DTC B2187 indicated?

    YES—Replace the power window master switch. ■

    NO—Go to step 19.

19. Reconnect front passenger's MPCS unit connector A (28P).

20. Clear the DTCs with the HDS.

21. Turn the ignition switch to LOCK (0) and then back to ON (II).

22. Operate the front passenger's power window switch in each direction.

23. Check for DTCs with the HDS.

    Is DTC B2187 indicated?

    YES—Replace the front passenger's MPCS unit. ■

    NO—Go to step 24.

24. Reconnect the right rear power window switch 14P connector.

25. Clear the DTCs with the HDS.

26. Turn the ignition switch to LOCK (0) and then back to ON (II).

27. Operate the right rear power window switch in each direction.

28. Check for DTCs with the HDS.

    Is DTC B2187 indicated?

    YES—Replace the right rear power window switch. ■

    NO—Go to step 29.

29. Reconnect the left rear power window switch 14P connector.

30. Clear the DTCs with the HDS.

31. Turn the ignition switch to LOCK (0) and then back to ON (II).

32. Operate the left rear power window switch in each direction.

33. Check for DTCs with the HDS.

    Is DTC B2187 indicated?

    YES—Replace the left rear power window switch. ■

    NO—Go to step 34.

34. Reconnect the moonroof motor/control unit 8P connector.

35. Clear the DTCs with the HDS.

36. Turn the ignition switch to LOCK (0) and then back to ON (II).

37. Open and close the moonroof with the moonroof switch.

38. Check for DTCs with the HDS.

    Is DTC B2187 indicated?

    YES—Replace the moonroof motor/control unit. ■

    NO—Replace the driver's MPCS unit. ■

DTC Troubleshooting (cont'd)

DTC B2188: Communication Line (UART Line) Circuit Open

NOTE: If you are troubleshooting multiple DTCs, be sure to follow the instructions in B-CAN System Diagnosis Test Mode A (see page 22-131).

1. Clear the DTCs with the HDS.
2. Turn the ignition switch to LOCK (0) and then back to ON (II).
3. Open and close the each window by operating the front passenger's, left rear, and right rear power window switches.
4. Check for DTCs with the HDS.

   Is DTC B2188 indicated, and does the any window fail to open or close?

   YES—Go to step 5.

   NO—Intermittent failure, the UART line is OK at this time. ■
5. Turn the ignition switch to LOCK (0).
6. Disconnect these connectors:
   - Driver's MPCS unit connector A (40P)
   - Power window master switch 6P connector
   - Front passenger's MPCS unit connector A (28P)
   - Left rear power window switch 14P connector
   - Right rear power window switch 14P connector
7. Check for continuity between driver's MPCS unit connector A (40P) terminal No. 8 and front passenger's MPCS unit connector A (28P) terminal No. 4.

DRIVER'S MPCS UNIT CONNECTOR A (40P)
Wire side of female terminals

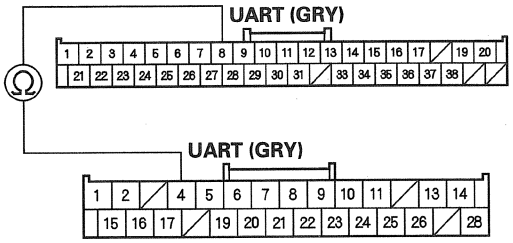

FRONT PASSENGER'S MPCS UNIT CONNECTOR A (28P)
Wire side of female terminals

Is there continuity?

YES—Go to step 8.

NO—Repair an open in the wire, or replace the faulty passenger's under-dash fuse/relay box. ■

8. Check for continuity between driver's MPCS unit connector A (40P) terminal No. 8 and right rear power window switch 14P connector terminal No. 2.

DRIVER'S MPCS UNIT CONNECTOR A (40P)
Wire side of female terminals

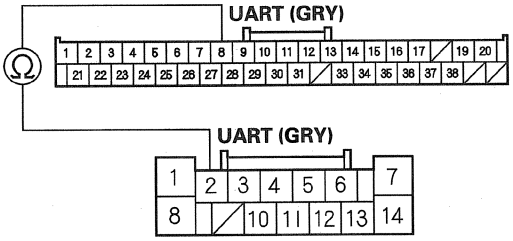

RIGHT REAR POWER WINDOW SWITCH 14P CONNECTOR
Wire side of female terminals

Is there continuity?

YES—Go to step 9.

NO—Repair an open in the wire, or replace the faulty passenger's under-dash fuse/relay box. ■

9. Check for continuity between driver's MPCS unit connector A (40P) terminal No. 8 and left rear power window switch 14P connector terminal No. 2.

DRIVER'S MPCS UNIT CONNECTOR A (40P)
Wire side of female terminals

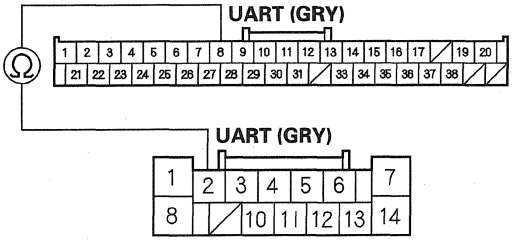

LEFT REAR POWER WINDOW SWITCH 14P CONNECTOR
Wire side of female terminals

Is there continuity?

YES—Go to step 10.

NO—Repair an open in the wire. ■

10. Check for continuity between driver's MPCS unit connector A (40P) terminal No. 8 and power window master switch 6P connector terminal No. 6.

POWER WINDOW MASTER SWITCH 6P CONNECTOR
Wire side of female terminals

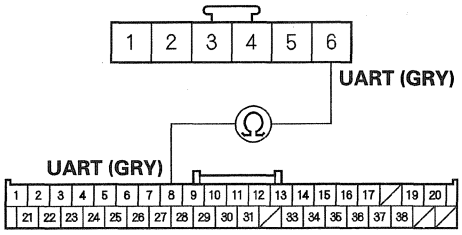

DRIVER'S MPCS UNIT CONNECTOR A (40P)
Wire side of female terminals

Is there continuity?

YES—Go to step 11.

NO—Repair an open in the wire. ■

11. Substitute a known-good power window master switch, and do the power window control unit learning procedure (see page 22-331).

12. Connect these connectors:

- Driver's MPCS unit connector A (40P)
- Front passenger's MPCS unit connector A (28P)
- Left rear power window switch 14P connector
- Right rear power window switch 14P connector

13. Turn the ignition switch to ON (II).

14. Clear the DTCs with the HDS.

15. Open and close the each window by operating the power window master switch.

16. Check for DTCs with the HDS.

Is DTC B2188 indicated?

YES—Go to step 17.

NO—The original power window master switch is faulty; replace it. ■

17. Turn the ignition switch to LOCK (0).

18. Substitute a known-good front passenger's MPCS unit.

19. Turn the ignition switch to ON (II).

20. Clear the DTCs with the HDS.

21. Open and close the front passenger's power window by operating the front passenger's power window switch.

22. Check for DTCs with the HDS.

Is DTC B2188 indicated?

YES—Go to step 23.

NO—The original front passenger's MPCS unit is faulty; replace it. ■

(cont'd)

DTC Troubleshooting (cont'd)

23. Turn the ignition switch to LOCK (0).
24. Substitute a known-good left rear power window switch.
25. Turn the ignition switch to ON (II).
26. Clear the DTCs with the HDS.
27. Open and close the left rear power window by operating the left rear power window switch.
28. Check for DTCs with the HDS.

    Is DTC B2188 indicated?

    YES—Go to step 29.

    NO—The original left rear power window switch is faulty; replace it. ■
29. Turn the ignition switch to LOCK (0).
30. Substitute a known-good right rear power window switch.
31. Turn the ignition switch to ON (II).
32. Clear the DTCs with the HDS.
33. Open and close the right rear power window by operating the right rear power window switch.
34. Check for DTCs with the HDS.

    Is DTC B2188 indicated?

    YES—Replace the driver's MPCS unit. ■

    NO—The original right rear power window power switch is faulty; replace it. ■

DTC B2189: Driver's Power Window Position Detect Circuit Error

NOTE: If you are troubleshooting multiple DTCs, be sure to follow the instructions in B-CAN System Diagnosis Test Mode A (see page 22-131).

1. Clear the DTCs with the HDS.
2. Turn the ignition switch to LOCK (0) and then back to ON (II).
3. Open and close the driver's power window by using the power window master switch manually.
4. Check for DTCs with the HDS.

    Is DTC B2175 or B2176 also indicated?

    YES—Troubleshoot the indicated DTC(s) first. ■

    NO—Go to step 5.
5. Reset the power window control unit (see page 22-331).
6. Clear the DTCs with the HDS.
7. Turn the ignition switch to LOCK (0) and then back to ON (II).
8. Open and close the driver's power window by using the power window master switch manually.
9. Check for DTCs with the HDS.

    Is DTC B2189 indicated?

    YES—Go to step 10.

    NO—The system is OK at this time. ■

10. Turn the ignition switch to LOCK (0).
11. Substitute a known-good driver's MPCS unit.
12. Clear the DTCs with the HDS.
13. Turn the ignition switch to LOCK (0) and then back to ON (II).
14. Open and close the driver's power window by using the power window master switch manually.
15. Check for DTCs with the HDS.

    Is DTC B2189 indicated?

    YES—Replace the driver's power window motor. ■

    NO—Replace the driver's MPCS unit. ■

DTC B2190: Front Passenger's Power Window Position Detect Circuit Error

NOTE: If you are troubleshooting multiple DTCs, be sure to follow the instructions in B-CAN System Diagnosis Test Mode A (see page 22-131).

1. Clear the DTCs with the HDS.
2. Turn the ignition switch to LOCK (0) and then back to ON (II).
3. Open and close the front passenger's window by using the front passenger's power window switch manually.
4. Check for DTCs with the HDS.

    Is DTC B2177 or B2178 also indicated?

    YES—Troubleshoot the indicated DTC(s) first. ■

    NO—Go to step 5.

5. Reset the power window control unit (see page 22-331).
6. Clear the DTCs with the HDS.
7. Turn the ignition switch to LOCK (0) and then back to ON (II).
8. Open and close the front passenger's power window by using the front passenger's power window switch manually.
9. Check for DTCs with the HDS.

    Is DTC B2190 indicated?

    YES—Go to step 10.

    NO—The system is OK at this time. ■

(cont'd)

DTC Troubleshooting (cont'd)

10. Turn the ignition switch to LOCK (0).
11. Substitute a known-good passenger's MPCS unit.
12. Clear the DTCs with the HDS.
13. Turn the ignition switch to LOCK (0) and then back to ON (II).
14. Open and close the front passenger's power window by using the front passenger's power window switch manually.
15. Check for DTCs with the HDS.

    Is DTC B2190 indicated?

    YES—Replace the front passenger's window motor. ■

    NO—Replace the passenger's MPCS unit. ■

DTC B2191: Front Passenger's MPCS Unit Internal (EEPROM) Error

NOTE: If you are troubleshooting multiple DTCs, be sure to follow the instructions in B-CAN System Diagnosis Test Mode A (see page 22-131).

1. Clear the DTCs with the HDS.
2. Turn the ignition switch to LOCK (0) and then back to ON (II).
3. Check for DTCs with the HDS.

   Is DTC B2191 indicated?

   YES—Replace the front passenger's MPCS unit. ■

   NO—Intermittent failure, the system is OK at this time. ■

Driver's MPCS Unit Input Test

1. Turn the ignition switch to LOCK (0).
2. Remove the driver's door panel (see page 20-9).
3. Disconnect driver's MPCS unit (A) connectors A (40P) and B (14P).

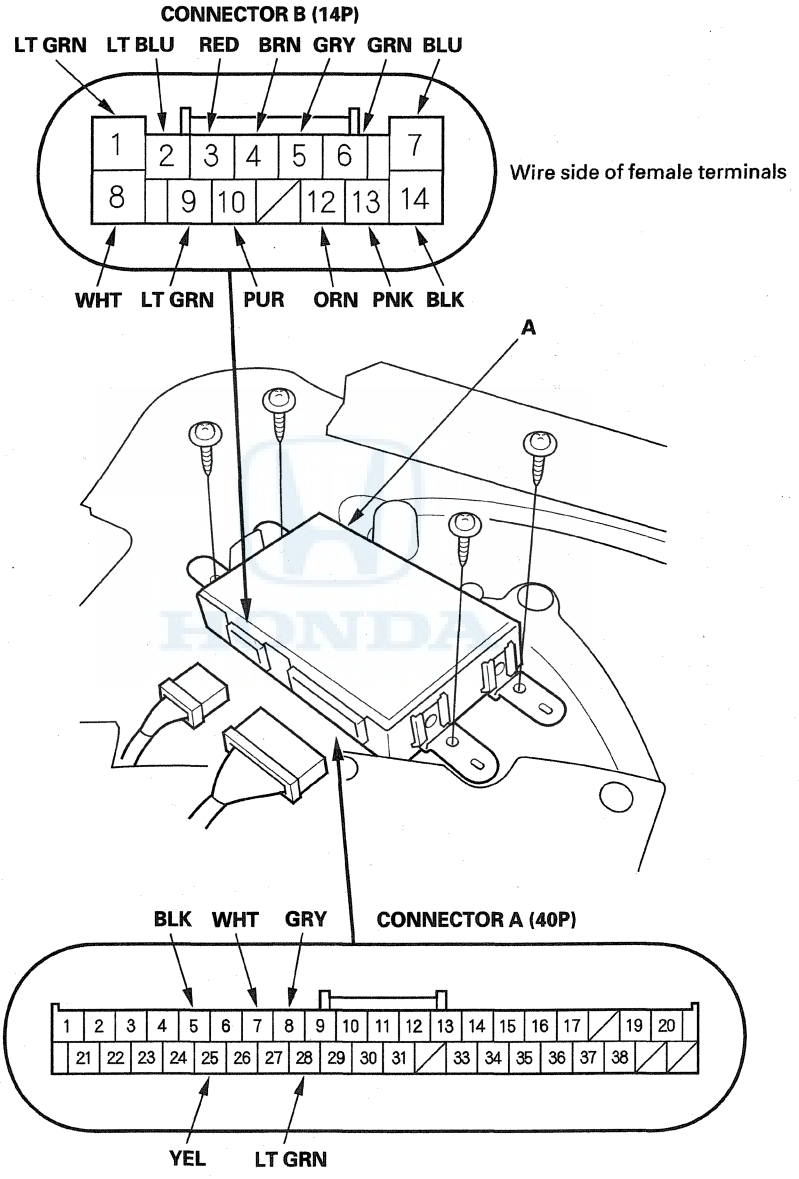

Wire side of female terminals

4. Inspect the connector and socket terminals to be sure they are all making good contact.
   - If the terminals are bent, loose or corroded, repair them as necessary and recheck the system.
   - If the terminals look OK, go to step 5.

(cont'd)

Driver's MPCS Unit Input Test (cont'd)

5. With the connectors still disconnected, do these input tests at the following connectors.

   - If any test indicates a problem, find and correct the cause, then recheck the system.
   - If all the input tests prove OK, go to step 6.

Cavity	Wire	Test condition	Test: Desired result	Possible cause if desired result is not obtained
A8	GRY	Driver's under-dash fuse/relay box connector J (21P) and power window master switch 6P connector disconnected	Check for continuity between terminal A8 and driver's under-dash fuse/relay box connector J (21P) terminal No. 1, and terminal A8 and power window master switch 6P connector terminal No. 6: There should be continuity.	An open in the wire
			Check for continuity to ground: There should be no continuity.	A short to ground in the wire
B10 B12	PUR ORN	Driver's power window switch in DOWN position	Check for continuity between the terminals: There should be no continuity.	• Faulty power window master switch • A short to ground in the wire
B10 B12	PUR ORN	Driver's power window switch released	Check for continuity between the terminals: There should be continuity.	• Faulty power window master switch • An open in the wire
B10 B13	PUR PNK	Driver's power window switch in DOWN position	Check for continuity between the terminals: There should be continuity.	• Faulty power window master switch • An open in the wire
B10 B13	PUR PNK	Driver's power window switch released	Check for continuity between the terminals: There should be no continuity.	• Faulty power window master switch • A short to ground in the wire
B9 B2	LT GRN LT BLU	Driver's power window switch in UP position	Check for continuity between the terminals: There should be continuity.	• Faulty power window master switch • An open in the wire
B9 B2	LT GRN LT BLU	Driver's power window switch released	Check for continuity between the terminals: There should be no continuity.	• Faulty power window master switch • A short to ground in the wire
B1	LT GRN	Connect terminals B8 and B1 with a jumper wire, and connect terminal B7 to body ground.	Check the driver's power window motor operation: The motor should run (the window should go down).	• Blown No. 27 (30 A) fuse in the driver's under-dash fuse/relay box • Faulty driver's power window motor • An open in the wire
B7	BLU	Connect terminals B8 and B7 with a jumper wire, and connect terminal B1 to body ground.	Check the driver's power window motor operation: The motor should run (the window should go up).	• Blown No. 27 (30 A) fuse in the driver's under-dash fuse/relay box • Faulty driver's power window motor • An open in the wire

6. Reconnect the connectors to the driver's MPCS unit, and do these input tests at the following connectors.

   - If any test indicates a problem, find and correct the cause, then recheck the system.
   - If all the input tests prove OK, the control unit must be faulty; replace the driver's MPCS unit and go to step 7.

Cavity	Wire	Test condition	Test: Desired result	Possible cause if desired result is not obtained
A5	BLK	Under all conditions	Measure the voltage to ground: There should be less than 0.2 V.	• Poor ground (G601) • Faulty driver's under-dash fuse/relay box • An open in the wire
B14	BLK	Under all conditions	Measure the voltage to ground: There should be less than 0.2 V.	• Poor ground (G601) • Faulty driver's under-dash fuse/relay box • An open in the wire
A7	WHT	Under all conditions	Measure the voltage to ground: There should be battery voltage.	• Blown No. 15 (40 A) fuse in the under-hood fuse/relay box • Blown No. 7 (10 A) fuse in the driver's under-dash fuse/relay box • Faulty driver's under-dash fuse/relay box • An open in the wire
B8	WHT	Under all conditions	Measure the voltage to ground: There should be battery voltage.	• Blown No. 23 (P/W) (50 A) fuse in the under-hood fuse/relay box • Blown No. 27 (30 A) fuse in the driver's under-dash fuse/relay box • Faulty driver's under-dash fuse/relay box • An open in the wire
A25	YEL	Ignition switch ON (II)	Measure the voltage to ground: There should be battery voltage.	• Blown No. 21 (10 A) fuse in the driver's under-dash fuse/relay box • Faulty driver's under-dash fuse/relay box • An open in the wire
B9	LT GRN	Ignition switch ON (II)	Measure the voltage to ground: There should be battery voltage.	• Faulty driver's MPCS unit • Faulty power window master switch • A short to ground in the wire
B3	RED	Ignition switch ON (II)	Measure the voltage to ground: There should be battery voltage.	• Faulty driver's MPCS unit • An open in the wire
B6	GRN	Under all conditions	Measure the continuity to ground: There should be continuity.	• Poor ground (G601) • Faulty driver's MPCS unit • An open in the wire
B5	GRY	Ignition switch ON (II) and driver's power window motor runs by connecting terminals B8 and B1 with a jumper wire, and connect terminal B7 to body ground.	Measure the voltage between terminals B5 and B6: An analog meter should alternate between 0 V and about 5 V (a digital voltmeter reads about 2.5 V while the window moves).	• Blown No. 27 (30 A) fuse in the driver's under-dash fuse/relay box • Faulty driver's MPCS unit • Faulty driver's power window motor • An open in the wire
B4	BRN	Ignition switch ON (II) and driver's power window motor runs by connecting terminals B8 and B1 with a jumper wire, and connect terminal B7 to body ground.	Measure the voltage between terminals B4 and B6: An analog meter should alternate between 0 V and about 5 V (a digital voltmeter reads about 2.5 V while the window moves).	• Blown No. 27 (30 A) fuse in the driver's under-dash fuse/relay box • Faulty driver's MPCS unit • Faulty driver's power window motor • An open in the wire

7. Reset the power window control unit (see page 22-331).

Front Passenger's MPCS Unit Input Test

1. Turn the ignition switch to LOCK (0).
2. Remove the front passenger's door panel (see page 20-9).
3. Disconnect front passenger's MPCS unit (A) connectors A (28P) and B (14P).

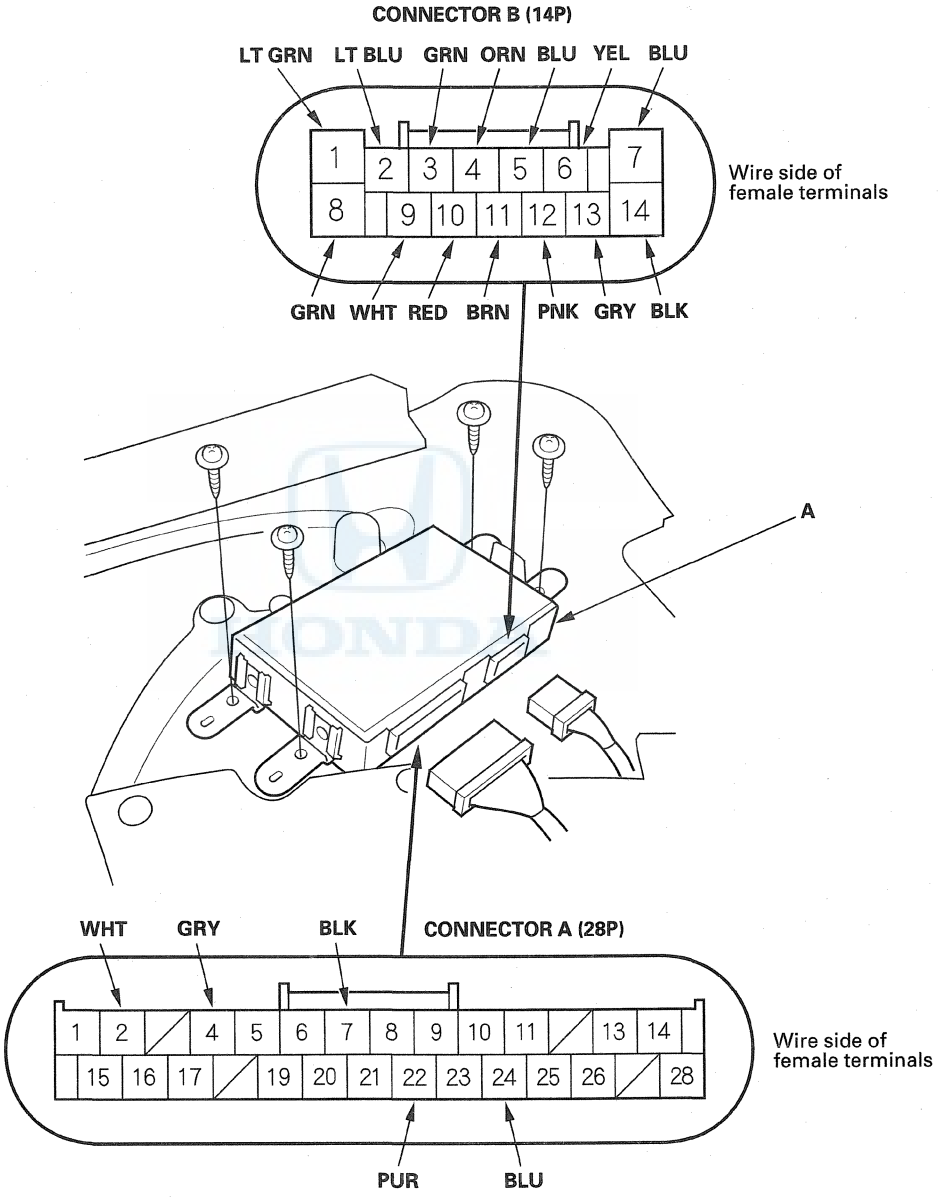

4. Inspect the connector and socket terminals to be sure they are all making good contact.
   - If the terminals are bent, loose or corroded, repair them as necessary and recheck the system.
   - If the terminals look OK, go to step 5.

5. With the connectors still disconnected, do these input tests at the following connectors.

   - If any test indicates a problem, find and correct the cause, then recheck the system.
   - If all the input tests prove OK, go to step 6.

Cavity	Wire	Test condition	Test: Desired result	Possible cause if desired result is not obtained
A4	GRY	Driver's under-dash fuse/relay box connector X (39P) and right rear power window switch 14P connector disconnected	Check for continuity between terminal A4 and driver's under-dash fuse/relay box connector X (39P) terminal No. 15, and terminal A4 and right rear power window switch 14P connector terminal No. 2: There should be continuity.	• Faulty passenger's under-dash fuse/relay box • An open in the wire
			Check for continuity to ground: There should be no continuity.	• Faulty passenger's under-dash fuse/relay box • A short to ground in the wire
B2 A24	LT BLU BLU	Front passenger's power window switch in AUTO position	Check for continuity between the terminals: There should be continuity.	• Faulty front passenger's power window switch • An open in the wire
B2 A24	LT BLU BLU	Front passenger's power window switch released	Check for continuity between the terminals: There should be no continuity.	• Faulty front passenger's power window switch • A short to ground in the wire
B13 A24	GRY BLU	Front passenger's power window switch in UP position	Check for continuity between the terminals: There should be continuity.	• Faulty front passenger's power window switch • An open in the wire
B13 A24	GRY BLU	Front passenger's power window switch released	Check for continuity between the terminals: There should be no continuity.	• Faulty front passenger's power window switch • A short to ground in the wire
B11 A24	BRN BLU	Front passenger's power window switch in DOWN position	Check for continuity between the terminals: There should be continuity.	• Faulty front passenger's power window switch • An open in the wire
B11 A24	BRN BLU	Front passenger's power window switch released	Check for continuity between the terminals: There should no continuity.	• Faulty front passenger's power window switch • A short to ground in the wire
B9 A24	WHT BLU	Under all conditions	Connect battery power to terminal A24 and ground terminal B9. The LED should come on.	• Faulty front passenger's power window switch • Faulty LED • An open in the wire

(cont'd)

Front Passenger's MPCS Unit Input Test (cont'd)

Cavity	Wire	Test condition	Test: Desired result	Possible cause if desired result is not obtained
B10 B12 A22	RED PNK PUR	Front passenger's power window switch DOWN	Check for continuity between the terminals: There should be continuity between terminals B10 and A22, and no continuity between terminals B10 and B12.	• Faulty front passenger's power window switch • An open in the wire • A short to ground in the wire
B10 B12 A22	RED PNK PUR	Front passenger's power window switch in released	Check for continuity between the terminals: There should be continuity between terminals B10 and B12, and no continuity between terminals B10 and A22.	• Faulty front passenger's power window switch • An open in the wire • A short to ground in the wire
B1	LT GRN	Connect terminals B8 and B1 with a jumper wire, and connect terminal B7 to body ground.	Check the front passenger's power window motor operation: The motor should run (the window should go down).	• Blown No. 3 (30 A) fuse in the passenger's under-dash fuse/relay box • Faulty front passenger's power window motor • An open in the wire
B7	BLU	Connect terminals B8 and B7 with a jumper wire, and connect terminal B1 to body ground.	Check the front passenger's power window motor operation: The motor should run (the window should go up).	• Blown No. 3 (30 A) fuse in the passenger's under-dash fuse/relay box • Faulty front passenger's power window motor • An open in the motor

6. Reconnect the connectors to the front passenger's MPCS unit, and do these input tests at the following connectors.

- If any test indicates a problem, find and correct the cause, then recheck the system.
- If all the input tests prove OK, the control unit must be faulty; replace the front passenger's MPCS unit and go to step 7.

Cavity	Wire	Test condition	Test: Desired result	Possible cause if desired result is not obtained
A7	BLK	Under all conditions	Measure the voltage to ground: There should be less than 0.2 V.	• Poor ground (G506) • An open in the wire
B14	BLK	Under all conditions	Measure the voltage to ground: There should be less than 0.2 V.	• Poor ground (G506) • An open in the wire
A2	WHT	Under all conditions	Measure the voltage to ground: There should be battery voltage.	• Blown No. 15 (40 A) fuse in the under-hood fuse/relay box • Blown No. 7 (10 A) fuse in the driver's under-dash fuse/relay box • Faulty passenger's under-dash fuse/relay box • An open in the wire
B8	GRN	Under all conditions	Measure the voltage to ground: There should be battery voltage.	• Blown No. 22 (70 A) fuse in the under-hood fuse/relay box • Blown No. 3 (30 A) fuse in the passenger's under-dash fuse/relay box • Faulty passenger's under-dash fuse/relay box • An open in the wire
B3	GRN	Ignition switch ON (II)	Measure the voltage to ground: There should be battery voltage.	• Faulty front passenger's MPCS unit • An open in the wire
B6	YEL	Under all conditions	Measure the continuity to ground: There should be continuity.	• Poor ground (G506) • Faulty front passenger's MPCS unit • An open in the wire
B5	BLU	Ignition switch ON (II) and front passenger's power window motor runs by connecting terminals B8 and B1 with a jumper wire, and connect terminal B7 to body ground.	Measure the voltage between terminals B5 and B6: An analog meter should alternate between 0 V and about 5 V (a digital voltmeter reads about 2.5 V while the window moves).	• Blown No. 3 (30 A) fuse in the passenger's under-dash fuse/relay box • Faulty front passenger's MPCS unit • Faulty front passenger's power window motor • An open in the wire
B4	ORN	Ignition switch ON (II) and front passenger's power window motor runs by connecting terminals B8 and B1 with a jumper wire, and connect terminal B7 to body ground.	Measure the voltage between terminals B4 and B6: An analog meter should alternate between 0 V and about 5 V (a digital voltmeter reads about 2.5 V while the window moves).	• Blown No. 3 (30 A) fuse in the passenger's under-dash fuse/relay box • Faulty front passenger's MPCS unit • Faulty front passenger's power window motor • An open in the wire

7. Reset the power window control unit (see page 22-331).

Left Rear Power Window Switch Input Test

1. Turn the ignition switch to LOCK (0).
2. Remove the left rear power window switch (see page 22-372).
3. Disconnect the 14P connector (A) from the left rear power window switch (B).

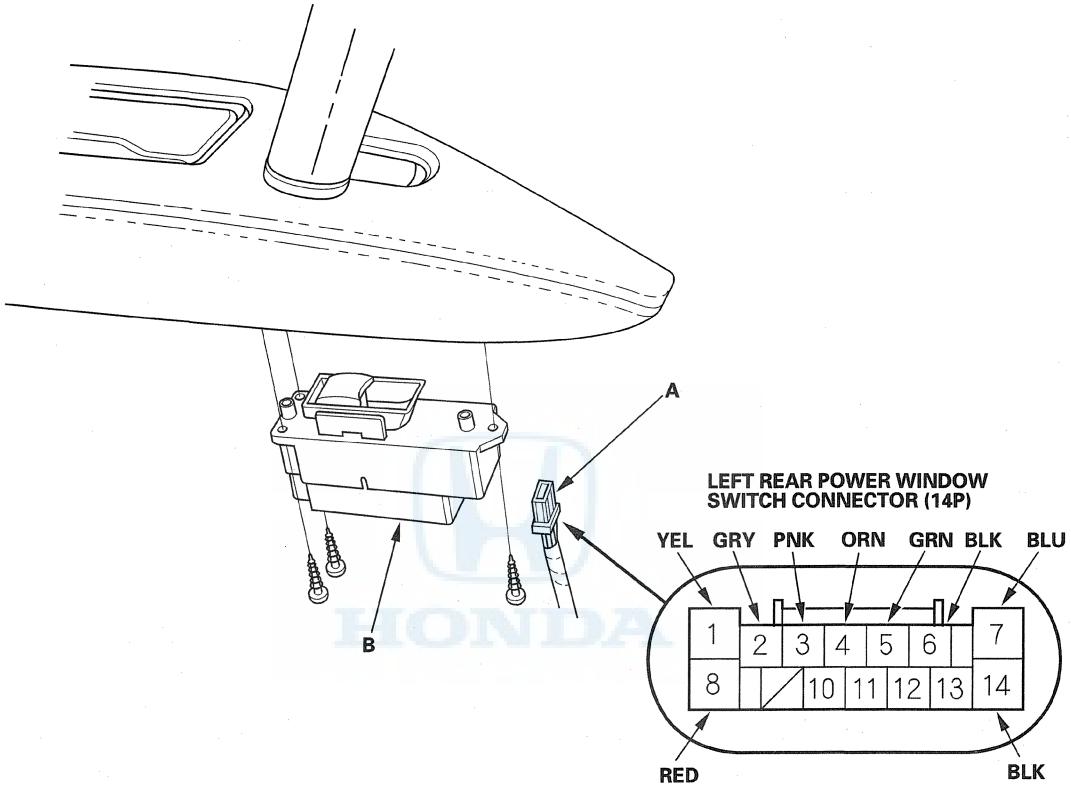

Wire side of female terminals

4. Inspect the connector and socket terminals to be sure they are all making good contact.
   - If the terminals are bent, loose or corroded, repair them as necessary and recheck the system.
   - If the terminals look OK, go to step 5.

(cont'd)

Left Rear Power Window Switch Input Test (cont'd)

5. With the connector still disconnected, do these input tests at the following connector.

   - If any test indicates a problem, find and correct the cause, then recheck the system.
   - If all the input tests prove OK, go to step 6.

Cavity	Wire	Test condition	Test: Desired result	Possible cause if desired result is not obtained
2	GRY	Driver's under-dash fuse/relay box connector H (14P) disconnected	Check for continuity between terminal No. 2 and driver's under-dash fuse/relay box connector H (14P) terminal No. 4: There should be continuity.	An open in the wire
			Check for continuity to ground: There should be no continuity.	A short to ground in the wire
1	YEL	Connect terminals No. 8 and No. 1 with a jumper wire, and connect terminal No. 7 to body ground.	Check the left rear power window motor operation: The motor should run (the window should go down).	• Blown No. 24 (20 A) fuse in the driver's under-dash fuse/relay box • Faulty left rear power window motor • An open in the wire
7	BLU	Connect terminals No. 8 and No. 7 with a jumper wire, and connect terminal No. 1 to body ground.	Check the left rear power window motor operation: The motor should run (the window should go up).	• Blown No. 24 (20 A) fuse in the driver's under-dash fuse/relay box • Faulty left rear power window motor • An open in the wire

6. Reconnect the connector to the left rear power window switch, and do these input tests at the following connector.

   - If any test indicates a problem, find and correct the cause, then recheck the system.
   - If all the input tests prove OK, the left rear power window switch must be faulty; replace it (see page 22-372) and go to step 7.

Cavity	Wire	Test condition	Test: Desired result	Possible cause if desired result is not obtained
6	BLK	Under all conditions	Measure the voltage to ground: There should be less than 0.2 V.	• Poor ground (G601) • An open in the wire
14	BLK	Under all conditions	Measure the voltage to ground: There should be less than 0.2 V.	• Poor ground (G601) • An open in the wire
8	RED	Under all conditions	Measure the voltage to ground: There should be battery voltage.	• Blown No. 23 (P/W) (50 A) fuse in the under-hood fuse/relay box • Blown No. 24 (20 A) fuse in the driver's under-dash fuse/relay box • Faulty driver's under-dash fuse/relay box • An open in the wire
3	PNK	Ignition switch ON (II)	Measure the voltage to ground: There should be battery voltage.	• Faulty left rear power window switch • An open in the wire
5	GRN	Ignition switch ON (II) and left rear power window motor runs by connecting terminals No. 8 and No. 1 with a jumper wire, and connect terminal No. 7 to body ground.	Measure the voltage between terminals No. 5 and No. 6: An analog meter should alternate between 0 V and about 5 V (a digital voltmeter reads about 2.5 V while the window moves).	• Blown No. 24 (20 A) fuse in the driver's under-dash fuse/relay box • Faulty left rear power window switch • Faulty left rear power window motor • An open in the wire
4	ORN	Ignition switch ON (II) and left rear power window motor runs by connecting terminals No. 8 and No. 1 with a jumper wire, and connect terminal No. 7 to body ground.	Measure the voltage between terminals No. 4 and No. 6: An analog meter should alternate between 0 V and about 5 V (a digital voltmeter reads about 2.5 V while the window moves).	• Blown No. 24 (20 A) fuse in the driver's under-dash fuse/relay box • Faulty left rear power window switch • Faulty left rear power window motor • An open in the wire

7. Reset the power window control unit (see page 22-331).

Right Rear Power Window Switch Input Test

1. Turn the ignition switch to LOCK (0).
2. Remove the right rear power window switch (see page 22-372).
3. Disconnect the 14P connector (A) from the right rear power window switch (B).

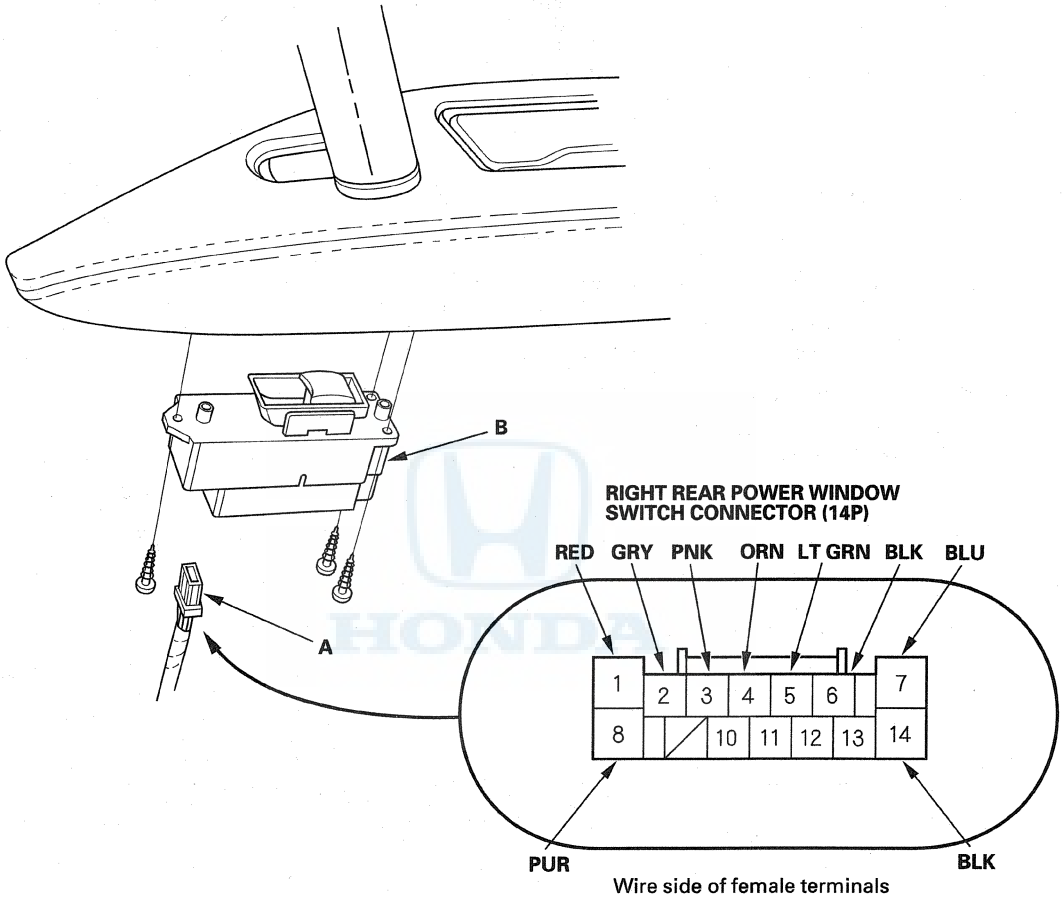

4. Inspect the connector and socket terminals to be sure they are all making good contact.
   - If the terminals are bent, loose or corroded, repair them as necessary and recheck the system.
   - If the terminals look OK, go to step 5.

(cont'd)

Right Rear Power Window Switch Input Test (cont'd)

5. With the connector still disconnected, do these input tests at the following connector.

   - If any test indicates a problem, find and correct the cause, then recheck the system.
   - If all the input tests prove OK, go to step 6.

Cavity	Wire	Test condition	Test: Desired result	Possible cause if desired result is not obtained
2	GRY	Driver's under-dash fuse/relay box connector X (39P) and passenger's MPCS unit connector A (28P) disconnected	Check for continuity between terminal No. 2 and driver's under-dash fuse/relay box connector X (39P) terminal No. 15: There should be continuity.	• Faulty passenger's under-dash fuse/relay box • An open in the wire
			Check for continuity to ground: There should be no continuity.	• Faulty passenger's under-dash fuse/relay box • A short to ground in the wire
1	RED	Connect terminals No. 8 and No. 1 with a jumper wire, and connect terminal No. 7 to body ground.	Check the right rear power window motor operation: The motor should run (the window should go down).	• Blown No. 5 (20 A) fuse in the passenger's under-dash fuse/relay box • Faulty right rear power window motor • An open in the wire
7	BLU	Connect terminals No. 8 and No. 7 with a jumper wire, and connect terminal No. 1 to body ground.	Check the right rear power window motor operation: The motor should run (the window should go up).	• Blown No. 5 (20 A) fuse in the passenger's under-dash fuse/relay box • Faulty right rear power window motor • An open in the wire

6. Reconnect the connector to the right rear power window switch, and do these input tests at the following connector.

   - If any test indicates a problem, find and correct the cause, then recheck the system.
   - If all the input tests prove OK, the right rear power window switch must be faulty; replace it (see page 22-372) and go to step 7.

Cavity	Wire	Test condition	Test: Desired result	Possible cause if desired result is not obtained
6	BLK	Under all conditions	Measure the voltage to ground: There should be less than 0.2 V.	• Poor ground (G651) • An open in the wire
14	BLK	Under all conditions	Measure the voltage to ground: There should be less than 0.2 V.	• Poor ground (G651) • An open in the wire
8	PUR	Under all conditions	Measure the voltage to ground: There should be battery voltage.	• Blown No. 22 (70 A) fuse in the under-hood fuse/relay box • Blown No. 5 (20 A) fuse in the passenger's under-dash fuse/relay box • Faulty passenger's under-dash fuse/relay box • An open in the wire
3	PNK	Ignition switch ON (II)	Measure the voltage to ground: There should be battery voltage.	• Faulty right rear power window switch • An open in the wire
5	LT GRN	Ignition switch ON (II) and right rear power window motor runs by connecting terminals No. 8 and No. 1 with a jumper wire, and connect terminal No. 7 to body ground.	Measure the voltage between terminals No. 5 and No. 6: An analog meter should alternate between 0 V and about 5 V (a digital voltmeter reads about 2.5 V while the window moves).	• Blown No. 5 (20 A) fuse in the passenger's under-dash fuse/relay box • Faulty right rear power window switch • Faulty right rear power window motor • An open in the wire
4	ORN	Ignition switch ON (II) and right rear power window motor runs by connecting terminals No. 8 and No. 1 with a jumper wire, and connect terminal No. 7 to body ground.	Measure the voltage between terminals No. 4 and No. 6: An analog meter should alternate between 0 V and about 5 V (a digital voltmeter reads about 2.5 V while the window moves).	• Blown No. 5 (20 A) fuse in the passenger's under-dash fuse/relay box • Faulty right rear power window switch • Faulty right rear power window motor • An open in the wire

7. Reset the power window control unit (see page 22-331).

Power Window Motor Test

Motor Test

1. Remove the door panel (see page 20-9).
2. Disconnect the 6P connector (A) from the power window motor.

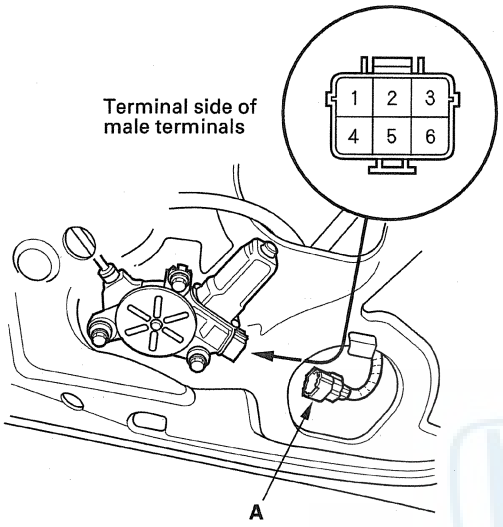

3. Test the motor in each direction by connecting battery power and ground according to the table. When the motor stops running, disconnect one lead immediately.

Terminal / Direction	4 (3)*	1 (6)*
UP	⊕	⊖
DOWN	⊖	⊕

***: Front passenger's and left rear**

4. If the motor does not run or fails to run smoothly, replace it.

Hall IC Unit (Pulser) Test

5. Measure the voltage between the terminals.

Common
There should be battery voltage between terminals No. 6 (No. 1)* (+) and No. 5 (No. 2)* (−) when the ignition switch is turned to ON (II).
*: Front passenger's and left rear power window motor

Driver's power window motor
Connect an analog voltmeter between terminals No. 2 (PLSA) (+) and No. 5 (SGND) (−), and between terminals No. 3 (PLSB) (+) and No. 5 (SGND) (−), then run the power window motor down or up. The voltmeter needle should move back and forth alternately (a digital voltmeter should show the average voltage between 0−5 V).

Front passenger's power window motor/Left rear power window motor
Connect an analog voltmeter between terminals No. 5 (PLSA) (+) and No. 2 (SGND) (−), and between terminals No. 4 (PLSB) (+) and No. 2 (SGND) (−), then run the power window motor down or up. The voltmeter needle should move back and forth alternately (a digital voltmeter should show the average voltage between 0−5 V).

Right rear power window motor
Connect an analog voltmeter between terminals No. 2 (PLSA) (+) and No. 5 (SGND) (−), and between terminals No. 3 (PLSB) (+) and No. 5 (SGND) (−), then run the power window motor down or up. The voltmeter needle should move back and forth alternately (a digital voltmeter should show the average voltage between 0−5 V).

6. If the voltage is not as specified, do these input tests:
   - Driver's MPCS unit input test (see page 22-361).
   - Front passenger's MPCS unit input test (see page 22-364).
   - Left power window switch input test (see page 22-367).
   - Right power window switch input test (see page 22-369).
7. If the input tests are OK, replace the power window motor.
8. Reset the power window control unit (see page 22-331).

Power Window Master Switch Replacement

1. Remove the driver's door armrest (see page 20-9).
2. Disconnect the 6P connector (A) from the power window master switch (B).

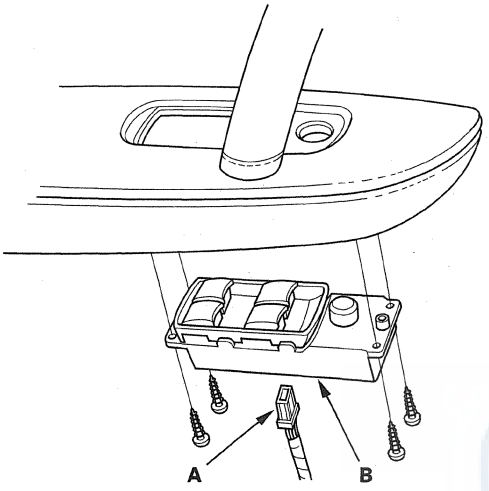

3. Remove the four screws and the switch.
4. Install the switch in the reverse order of removal.
5. After replacement, reset the power window control unit (see page 22-331).

Passenger's Power Window Switch Test/Replacement

1. Remove the passenger's door armrest (see page 20-9).
2. Disconnect the 10P (or 14P)* connector (A) from the passenger's power window switch (B).
   *: Rear power window switch

Front Passenger's

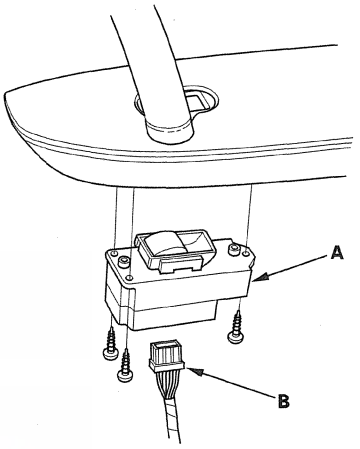

Rear

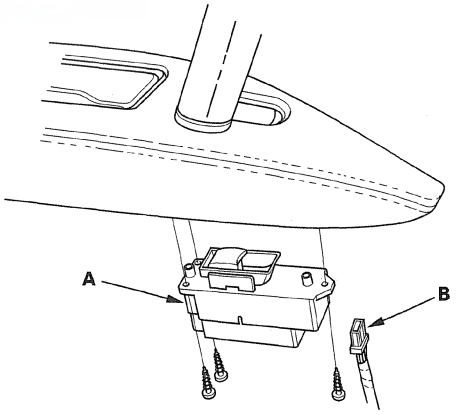

3. Remove the three screws and the switch.
4. Swap the power window switch with another known-good switch and test. If the original window switch is faulty; replace it.
5. Install the switch in the reverse order of removal.
6. After replacement, reset the power window control unit (see page 22-331).

Component Location Index

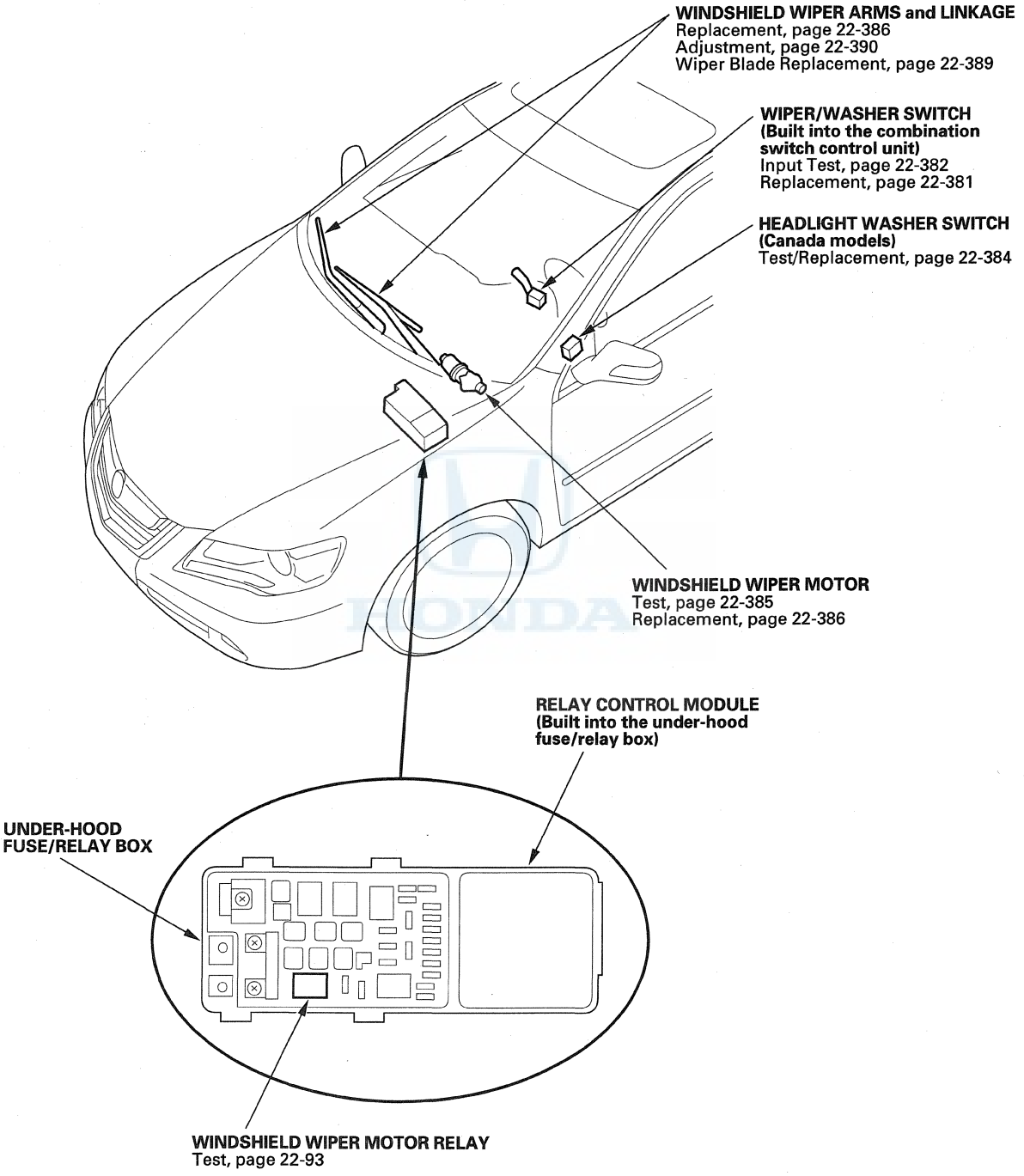

(cont'd)

Component Location Index (cont'd)

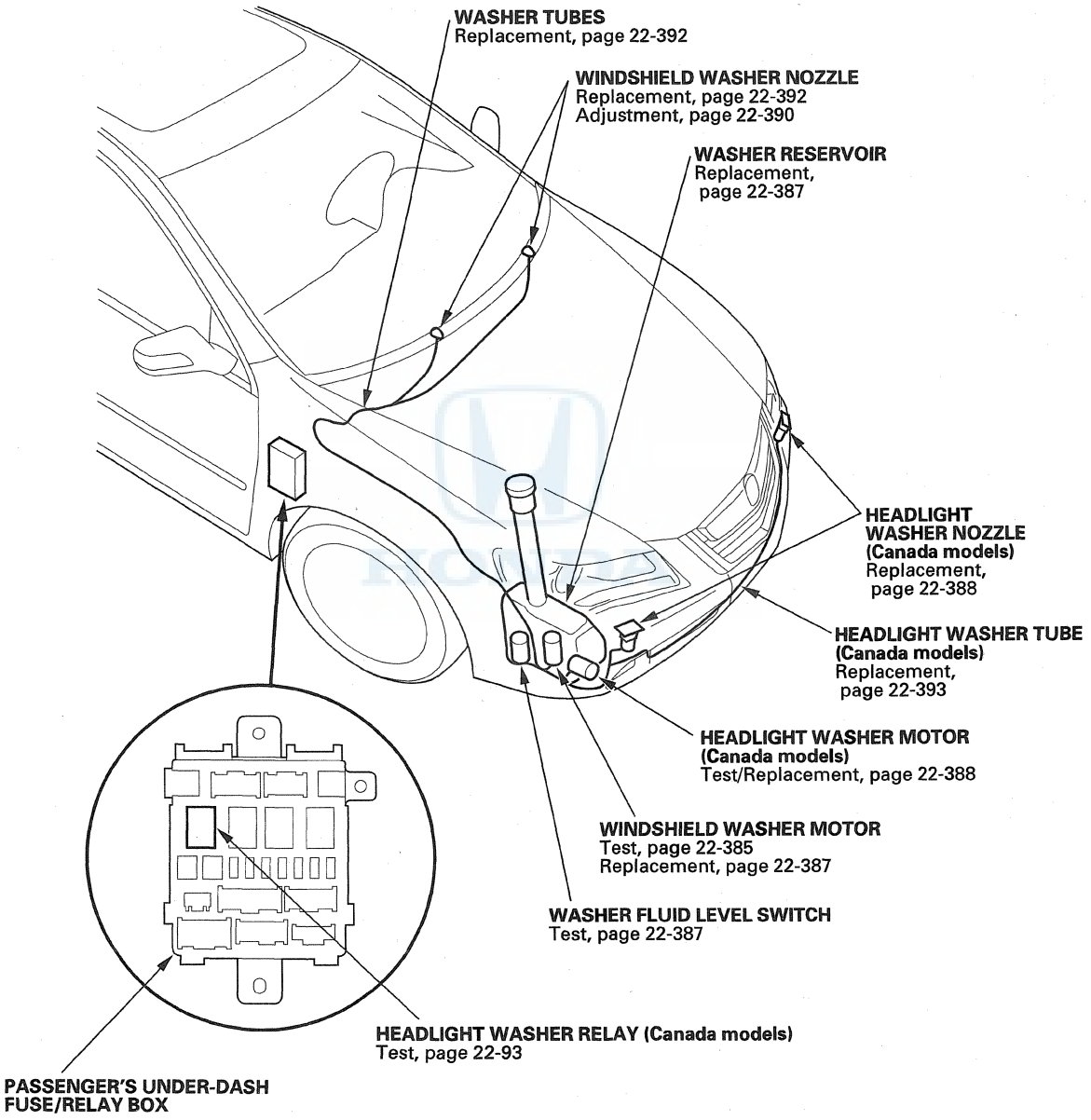

Circuit Diagram

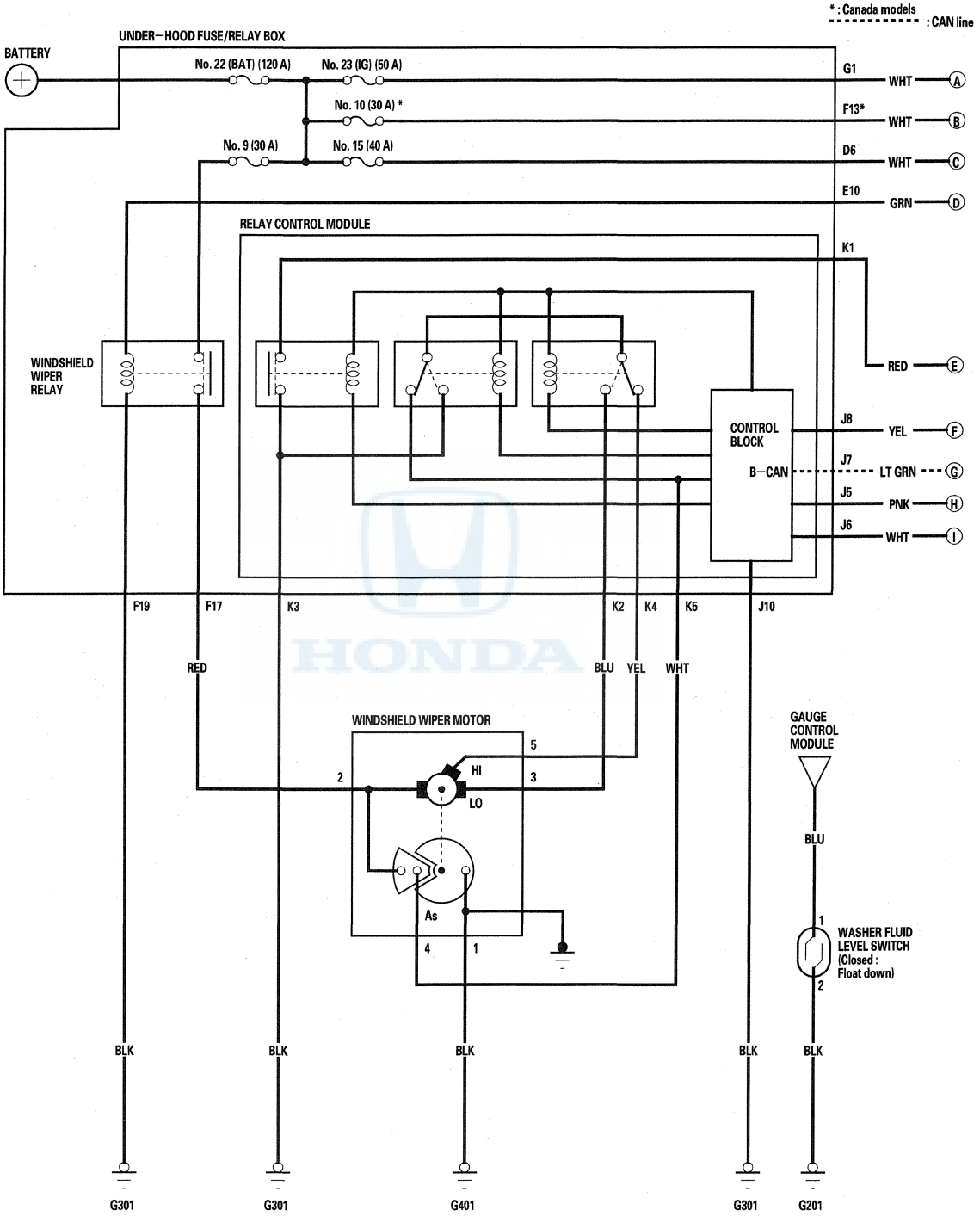

(cont'd)

Circuit Diagram (cont'd)

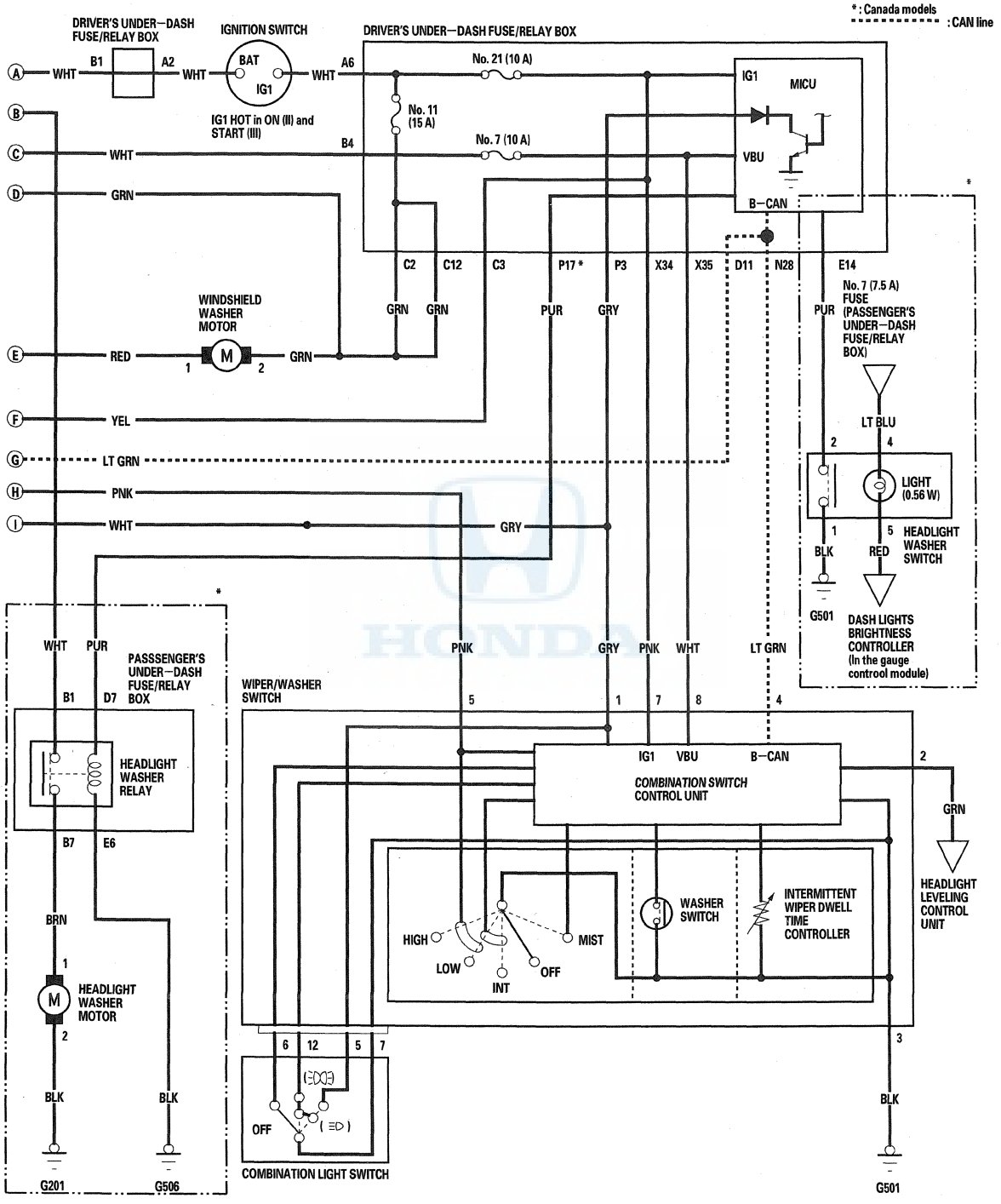

DTC Troubleshooting

DTC B1076: Windshield Wiper Signal Error

NOTE: If you are troubleshooting multiple DTCs, be sure to follow the instructions in B-CAN System Diagnosis Test Mode A (see page 22-131).

1. Clear the DTCs with the HDS.
2. Turn the ignition switch to LOCK (0) and then back to ON (II).
3. Turn the wiper switch to INT, LOW, then HIGH for at least 2 seconds each.
4. Check for DTCs with the HDS.

   Is DTC B1076 indicated?

   YES—Go to step 5.

   NO—Intermittent failure, the windshield wiper system is OK at this time. Check for loose poor connections. ■
5. With the wiper/washer switch OFF, select WINDSHIELD WIPERS from the BODY ELECTRICAL menu, and enter DATA LIST.
6. Check the ON/OFF information of the windshield wiper switch (BACK-UP) in the DATA LIST.

   Is the information indicator OFF?

   YES—Go to step 7.

   NO—Go to step 11.
7. Turn the wiper switch ON (low or high).
8. Check the ON/OFF information of the windshield wiper switch (BACK-UP) in the DATA LIST.

   Is the information indicator ON?

   YES—Faulty relay control module; replace the under-hood fuse/relay box (see page 22-84). ■

   NO—Go to step 9.
9. Disconnect under-hood fuse/relay box connector J (10P) and the wiper/washer switch 8P connector.
10. Check for continuity between under-hood fuse/relay box connector J (10P) terminal No. 5 and the wiper/washer switch (combination switch control unit) 8P connector terminals No. 5.

UNDER-HOOD FUSE/RELAY BOX CONNECTOR J (10P)
Wire side of female terminals

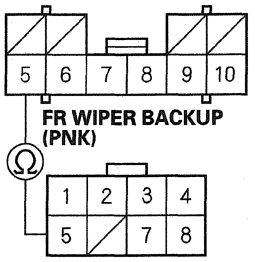

WIPER/WASHER SWITCH 8P CONNECTOR
Wire side of female terminals

Is there continuity?

YES—Faulty combination switch control unit; replace the wiper/washer switch. ■

NO—Repair an open in the PNK wire. ■

(cont'd)

DTC Troubleshooting (cont'd)

11. Disconnect under-hood fuse/relay box connector J (10P).

12. Check for continuity between under-hood fuse/relay box connector J (10P) terminal No. 5 and body ground.

UNDER-HOOD FUSE/RELAY BOX CONNECTOR J (10P)

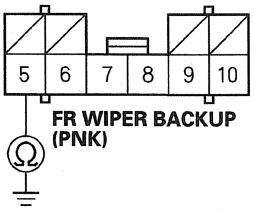

Wire side of female terminals

Is there continuity?

YES—Go to step 13.

NO—Faulty relay control module; replace the under-hood fuse/relay box (see page 22-84). ■

13. Disconnect the wiper/washer switch 8P connector.

14. Check for continuity between under-hood fuse/relay box connector J (10P) terminal No. 5 and body ground.

UNDER-HOOD FUSE/RELAY BOX CONNECTOR J (10P)

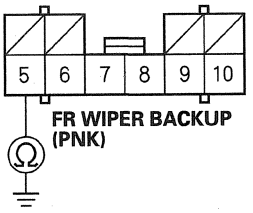

Wire side of female terminals

Is there continuity?

YES—Repair a short in the PNK wire. ■

NO—Faulty wiper/washer switch; replace it. ■

DTC B1077: Windshield Wiper (As) Signal Error

NOTE: If you are troubleshooting multiple DTCs, be sure to follow the instructions in B-CAN System Diagnosis Test Mode A (see page 22-131).

1. Clear the DTCs with the HDS.
2. Turn the ignition switch to LOCK (0) and then back to ON (II).
3. Turn the wiper switch to LOW, then HIGH, for at least 15 seconds in each position.
4. Check for DTCs with the HDS.

   Is DTC B1077 indicated?

   YES—Go to step 5.

   NO—Intermittent failure, the system is OK at this time. Check for loose or poor connections. ■
5. Turn the ignition switch to LOCK (0).
6. Test the wiper motor (see page 22-385).

   Does the wiper motor operate correctly?

   YES—Go to step 7.

   NO—Replace the windshield wiper motor and recheck. ■
7. Turn the ignition switch to ON (II).
8. Turn the wiper switch to LOW, then HIGH, and check wiper operation.

   Do the wipers operate normally?

   YES—Go to step 9.

   NO—Go to step 12.
9. Disconnect under-hood fuse/relay box connector K (5P) and the windshield wiper motor 5P connector.
10. Check for continuity between windshield wiper motor 5P connector terminal No. 4 and under-hood fuse/relay box connector K (5P) terminal No. 5.

UNDER-HOOD FUSE/RELAY BOX CONNECTOR K (5P)
Wire side of female terminals

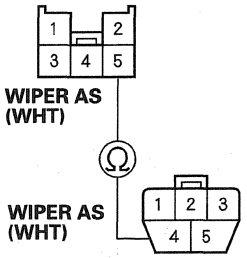

WINDSHIELD WIPER MOTOR 5P CONNECTOR
Wire side of female terminals

Is there continuity?

YES—Go to step 11.

NO—Repair an open in the WHT wire. ■

11. Check for continuity between under-hood fuse/relay box connector K (5P) terminal No. 5 and body ground.

UNDER-HOOD FUSE/RELAY BOX CONNECTOR K (5P)

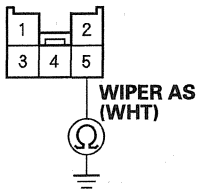

Wire side of female terminals

Is there continuity?

YES—Repair a short in the wire. ■

NO—Faulty relay control module; replace the under-hood fuse/relay box (see page 22-84). ■

(cont'd)

DTC Troubleshooting (cont'd)

12. Turn the ignition switch to LOCK (0) and check the No. 11 (7.5 A) fuse in the driver's under-dash fuse/relay box.

    Is the fuse OK?

    YES—Go to step 13.

    NO—Replace the blown fuse and recheck the system. ■

13. Turn the ignition switch to ON (II).

14. Measure the voltage between windshield wiper motor 5P connector terminal No. 2 and body ground.

WINDSHIELD WIPER MOTOR 5P CONNECTOR

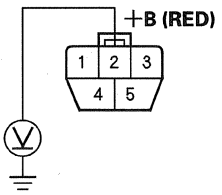

Wire side of female terminals

Is there battery voltage?

YES—Go to step 15.

NO—Check the No. 9 (30 A) fuse in the under-hood fuse/relay box. If the fuse is OK, repair an open in the RED wire, or replace the faulty windshield wiper motor relay in the under-hood fuse/relay box. ■

15. Check for continuity between windshield wiper motor 5P connector terminals No. 3 and No. 5 and under-hood fuse/relay box connector K (5P) terminals No. 2 and No. 4 respectively.

UNDER-HOOD FUSE/RELAY BOX CONNECTOR K (5P)
Wire side of female terminals

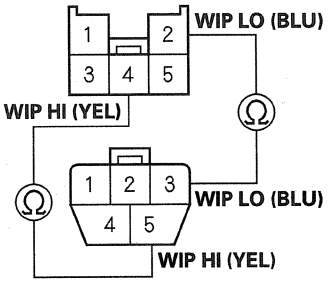

WINDSHIELD WIPER MOTOR 5P CONNECTOR
Wire side of female terminals

Is there continuity?

YES—Faulty relay control module; replace the under-hood fuse/relay box (see page 22-84). ■

NO—Repair an open in the BLU or YEL wire. ■

DTC B1281: Windshield Wiper Switch MIST Position Circuit Malfunction

DTC B1282: Windshield Wiper Switch INT (AUTO) Position Circuit Malfunction

DTC B1283: Windshield Wiper Switch LOW Position Circuit Malfunction

DTC B1284: Windshield Wiper Switch HIGH Position Circuit Malfunction

NOTE: If you are troubleshooting multiple DTCs, be sure to follow the instructions in B-CAN System Diagnosis Test Mode A (see page 22-131).

1. Clear the DTCs with the HDS.
2. Turn the ignition switch to LOCK (0) and then back to ON (II).
3. Turn the windshield wiper switch to MIST, and wait for at least 2 seconds.
4. Turn the windshield wiper switch OFF, and wait for at least 2 seconds.
5. Turn the windshield wiper switch to INT (AUTO), and wait for at least 2 seconds.
6. Turn the windshield wiper switch to LOW, and wait for at least 2 seconds.
7. Turn the windshield wiper switch in HIGH, and wait for at least 2 seconds.
8. Check for DTCs with the HDS.

   Is DTC B1281, B1282, B1283, and/or B1284 indicated?

   YES—Replace the wiper/washer switch. ■

   NO—Intermittent failure, the wiper/washer switch and the combination switch control unit are OK at this time. Check for loose or poor connections. ■

Wiper/Washer Switch Replacement

NOTE: The wiper/washer switch is built into the combination switch control unit. For the wiper/washer test, refer to the combination switch control unit input test (see page 22-382).

1. Remove the driver's dashboard undercover (see page 20-100), and the driver's dashboard lower cover (see page 20-100).
2. Remove the steering column covers (see page 17-25).
3. Disconnect the combination light switch 12P connector, and dashboard wire harness 8P connector (A) from the wiper/washer switch (B).

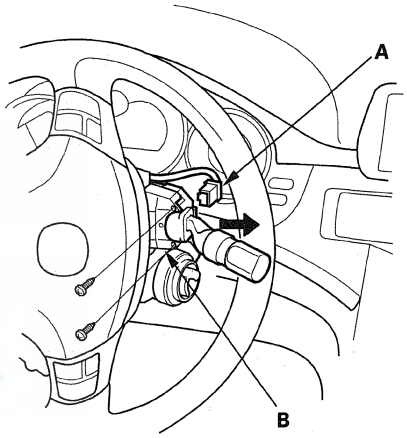

4. Remove the two screws, then slide out the wiper/washer switch.
5. Install the parts in the reverse order of removal.

Wiper/Washer Switch (Combination Switch Control Unit) Input Test

1. Turn the ignition switch to LOCK (0).
2. Remove the driver's dashboard undercover (see page 20-100), and the driver's dashboard lower cover (see page 20-100).
3. Remove the steering column covers (see page 17-25).
4. Disconnect the 8P connector (A) from the wiper/washer switch (B).

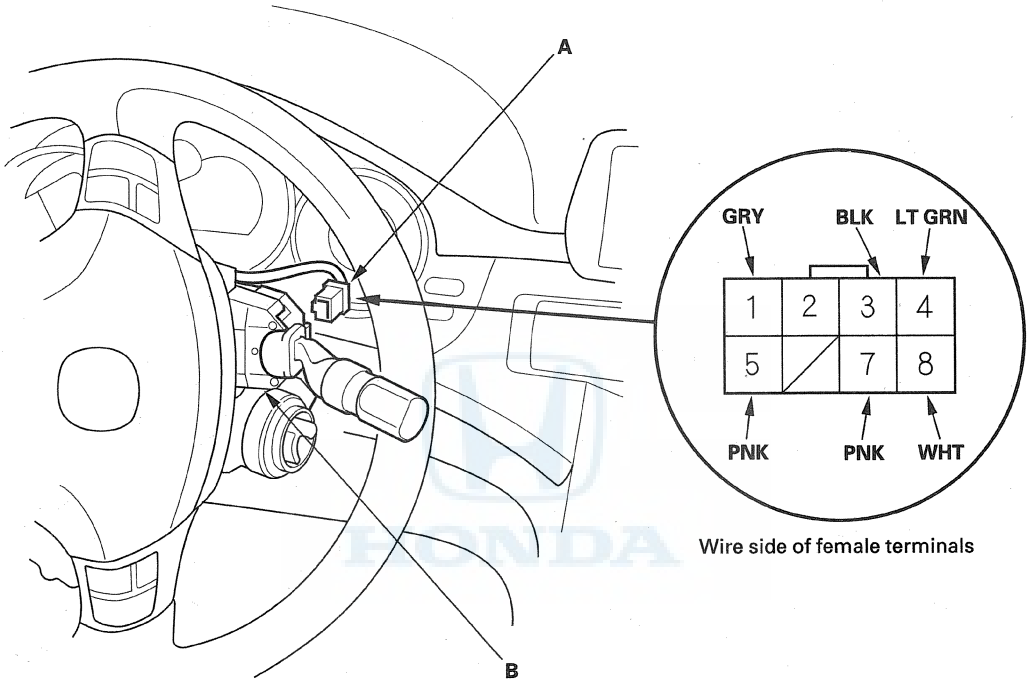

5. Inspect the connector and socket terminals to be sure they are all making good contact.
   - If the terminals are bent, loose or corroded, repair them as necessary, and recheck the system.
   - If the terminals look OK, go to step 6.

6. With the connector still disconnected, do these input tests at the following connector.

   • If any test indicates a problem, find and correct the cause, then recheck the system.
   • If all the input tests prove OK, go to step 7.

Cavity	Wire	Test condition	Test: Desired result	Possible cause if desired result is not obtained
5	PNK	Under all conditions	Check for continuity between the terminal No. 5 and under-hood fuse/relay box connector J (10P) terminal No. 5: There should be continuity.	An open in the wire
		Disconnect under-hood fuse/relay box connector J (10P)	Check for continuity between the terminal No. 5 and body ground: There should be no continuity.	A short to ground in the wire
4	LT GRN	Under all conditions	Check for continuity between the terminal No. 4 and driver's under-dash fuse/relay box connector N (45P) terminal No. 28: There should be continuity.	An open in the wire
		Disconnect driver's under-dash fuse/relay box connector N (45P)	Check for continuity between the terminal No. 4 and body ground: There should be no continuity.	A short to ground in the wire
1	GRY	Under all conditions	Check for continuity between the terminal No. 1 and under-hood fuse/relay box connector J (10P) terminal No. 6: There should be continuity.	An open in the wire
		Disconnect under-hood fuse/relay box connector J (10P) and driver's under-dash fuse/relay box connector P (30P)	Check for continuity between the terminal No. 1 and body ground: There should be no continuity.	A short to ground in the wire

7. Reconnect the 8P connector to the wiper/washer switch, and do these input tests at the following connector.

   • If any test indicates a problem, find and correct the cause, then recheck the system.
   • If all the input tests prove OK, replace the wiper/washer switch (combination switch control unit).

Cavity	Wire	Test condition	Test: Desired result	Possible cause if desired result is not obtained
3	BLK	Under all conditions	Measure the voltage to ground: There should be less than 0.2 V.	• Poor ground (G501) • An open in the wire
8	WHT	Under all conditions	Measure the voltage to ground: There should be battery voltage.	• Blown No. 15 (40 A) fuse in the under-hood fuse/relay box • Blown No. 7 (10 A) fuse in the driver's under-dash fuse/relay box • An open in the wire
7	PNK	Ignition switch ON (II)	Measure the voltage to ground: There should be battery voltage.	• Blown No. 21 (10 A) fuse in the driver's under-dash fuse/relay box • An open in the wire

Headlight Washer Switch Test/Replacement

Canada models

1. Carefully pry the switch panel out from the dashboard.
2. Disconnect the 5P connector (A) from the headlight washer switch (B).

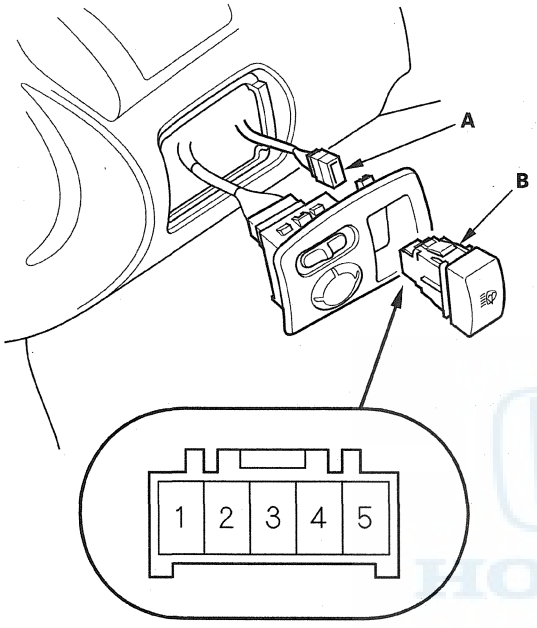

3. Check for continuity between the terminals in each switch position according to the table.

Terminal / Position	1	2	4		5
OFF			○	⊚	○
ON	○	○	○	⊚	○

4. If the continuity is not as specified, replace the bulb (A) or the headlight washer switch.

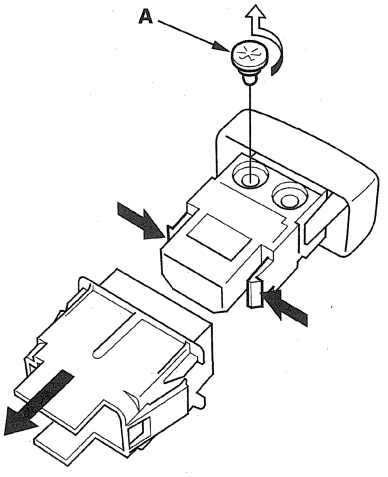

5. Install the parts in the reverse order of removal.

Wiper Motor Test

1. Open the hood, and remove the wiper arms (see page 22-386).

   NOTE: Carefully remove the wiper arms so that they do not touch the hood.

2. Remove the hood seal and cowl covers.

3. Disconnect the 5P connector (A) from the wiper motor (B).

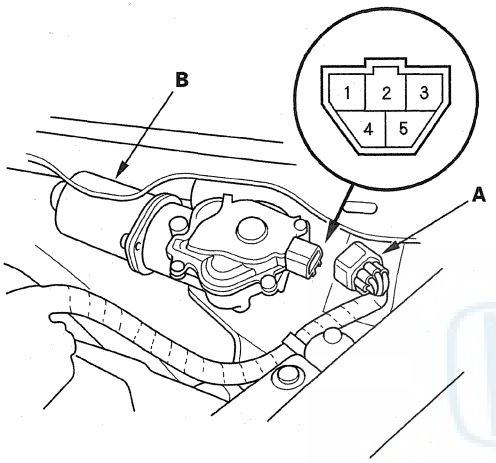

4. Test the motor by connecting battery power to terminal No. 2 and grounding terminal No. 3 of the wiper motor 5P connector. The motor should run at low speed. If the motor does not run or fails to run smoothly, replace the motor.

5. Test the motor by connecting battery power to terminal No. 2 and grounding terminal No. 5 of the wiper motor 5P connector. The motor should run at high speed. If the motor does not run or fails to run smoothly, replace the motor.

6. Connect an analog ohmmeter between terminals No. 1 and No. 4, and run the motor at low or high speed. The ohmmeter should indicate continuity and no continuity alternately. If it does not, replace the motor.

Washer Motor Test

1. Pull back the front section of the right front inner fender (see page 20-176).

2. Disconnect the 2P connector (A) from the washer motor (B).

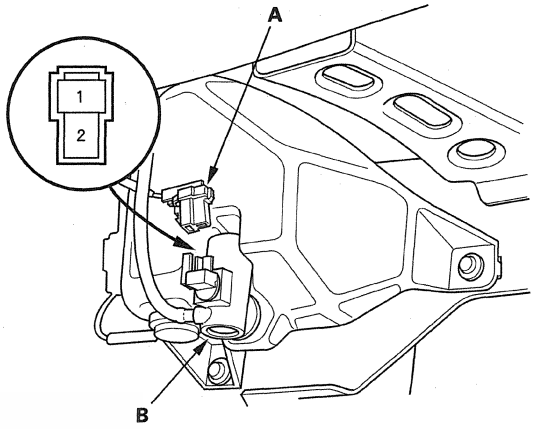

3. Test the motor by connecting battery power to terminal No. 1 and grounding terminal No. 2 of the washer motor. The motor should run.

   - If the motor does not run or fails to run smoothly, replace it.
   - If the motor runs smoothly, but little or no washer fluid is pumped, check for a disconnected or blocked washer hose, or a clogged washer motor outlet.

Wiper Motor Replacement

1. Open the hood.
2. Remove the caps, nuts (A), and the windshield wiper arms (B).

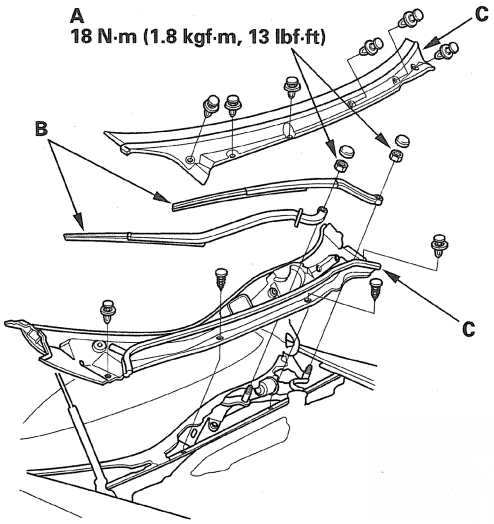

3. Remove the cowl covers (C).
4. Disconnect the 5P connector (A) from the wiper motor.

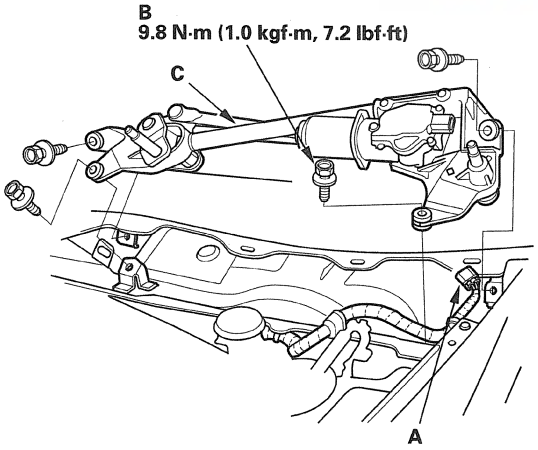

5. Remove the four bolts (B) and wiper linkage assembly (C).
6. Make sure the mark (A) of the link to show the original adjustment.
   Separate the windshield wiper linkage (B) from the wiper motor (C).

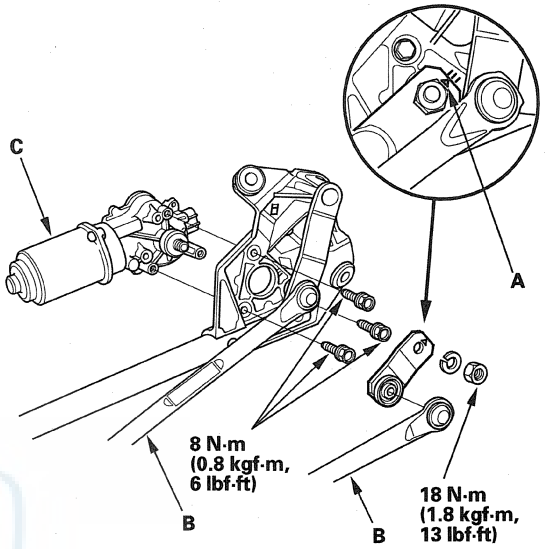

7. Install the parts in the reverse order to removal, and note these items:

- Apply multipurpose grease to the moving parts.
- Before reinstalling the wiper arms, turn the wiper switch ON, then OFF to return the wiper shafts to the park position.
- If necessary, replace any damaged clips.
- Check the wiper motor operation.

Washer Reservoir Replacement

1. Pull back the front section of the right front inner fender (see page 20-176).
2. Disconnect the washer tube (A) and washer motor 2P connector (B).

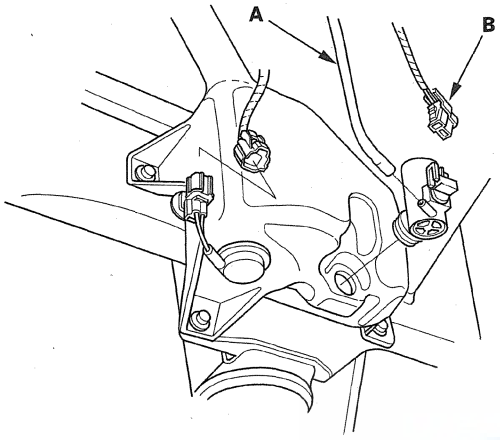

3. Remove the clip and three bolts (A), then remove the washer reservoir (B).

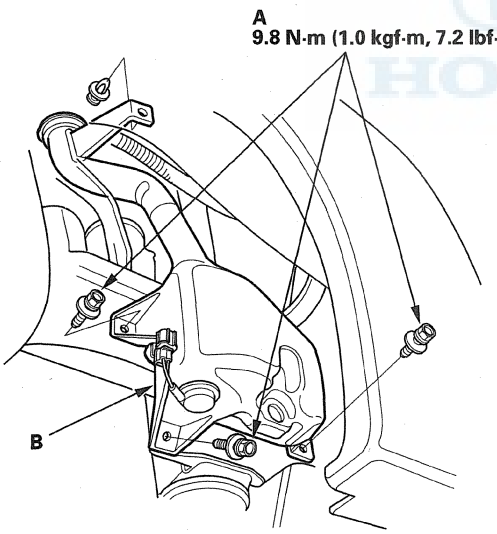

4. Install the reservoir in the reverse order of removal.

Washer Fluid Level Switch Test

1. Pull back the front section of the right front inner fender (see page 20-176).
2. Disconnect the 2P connector (A) from the washer fluid level switch (B).

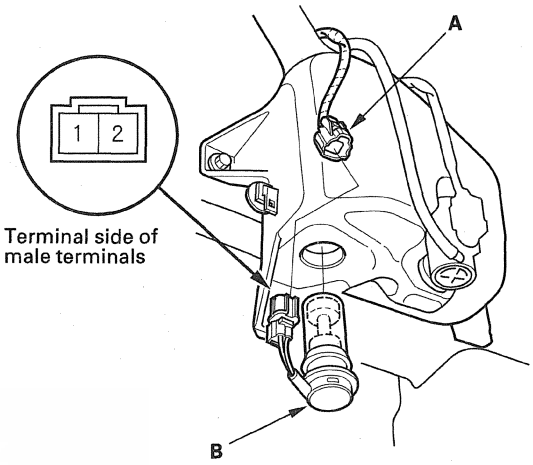

3. Remove the washer fluid level switch from the reservoir.

   NOTE: Fluid may flow out of the opening.

4. Check for continuity between terminals No. 1 and No. 2 in each float position.

   - There should be continuity when the float is down.
   - There should be no continuity when the float is up.

5. If the continuity is not as specified, replace the switch.

Headlight Washer Motor Test/ Replacement

Canada models

1. Pull back the front section of the right front inner fender (see page 20-176).
2. Disconnect the 2P connector (A) from the washer motor (B).

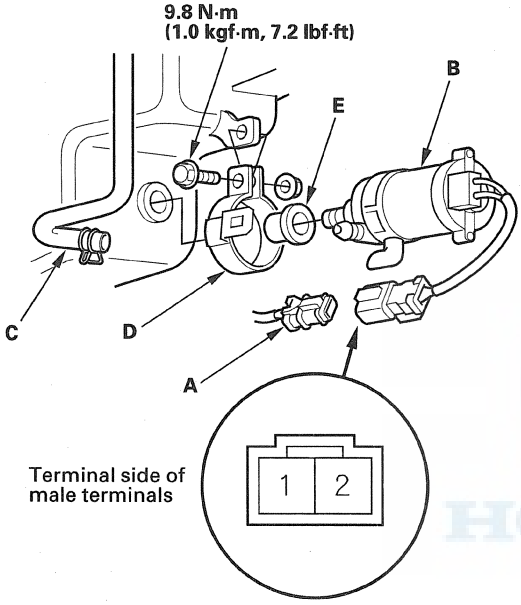

3. Test the motor by connecting battery power to terminal No. 1 and grounding terminal No. 2 of the headlight washer motor. The motor should run.
   - If the motor does not run smoothly, replace it.
   - If the motor runs smoothly, but little or no washer fluid is pumped, check for a disconnected or blocked washer hose, or a clogged washer motor outlet.
4. Disconnect the tube (C), then remove the bolt and bracket (D).
5. Disconnect the headlight washer motor from the washer reservoir.
6. Install the headlight washer motor in the reverse order of removal. If the gasket (E) is damaged, replace it.

Headlight Washer Nozzle Replacement

Canada models

1. Remove the front bumper (see page 20-149), and disconnect the headlight washer tube from the headlight washer motor.
2. Disconnect the headlight washer tube (A) from the headlight washer nozzle (B).

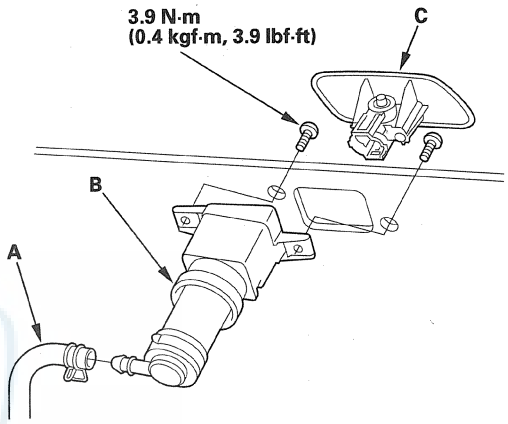

3. Remove the headlight washer nozzle cover (C).
4. Remove the two screws, then remove the headlight washer nozzle.
5. Install the nozzle in the reverse order of removal. After installation, check the headlight washer operation.

Wiper Blade Replacement

1. Adjust the wiper arms to the winter position (see page 22-390), then raise the wiper arms off the windshield.

   NOTE:
   - Lift the driver's side first.
   - Do not open the hood when the wiper arms are raised.

2. Push the edge of the cover on the blade assembly until the other side of the edge is pivoted out, and remove the cover (A).

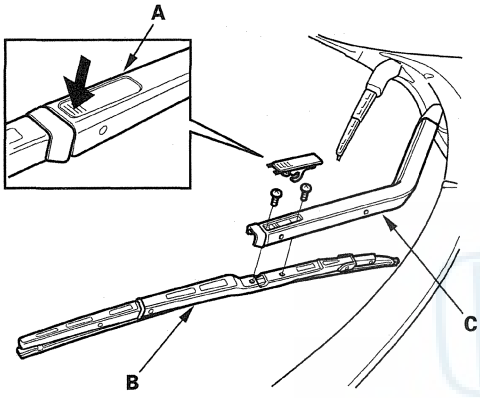

3. Disconnect the blade assembly (B) from the wiper arm (C) by removing the two screws from the arm.

4. Remove the blade (A) from its holder by grasping the tabbed end of the blade. Pull firmly until the tabs come out of the holder.

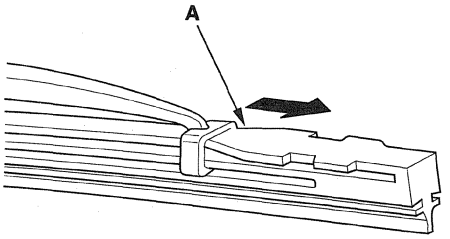

5. Examine the new wiper blades. If they have no plastic or metal reinforcement (A), remove the metal reinforcement strips from the old wiper blades, and install them in the slots along the edge of the new blade.

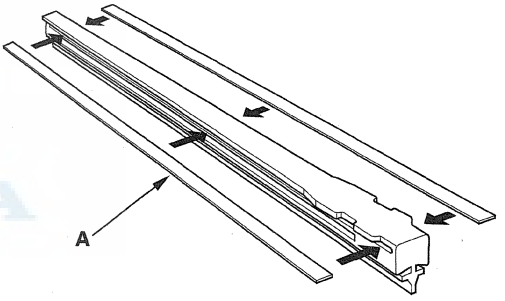

6. Install the wiper blades onto the wiper arms in the reverse order of removal.

7. Check the wiper operation, if the blades slip, turn the wiper switch OFF, and reinstall the wiper blades securely.

Wiper Arm/Nozzle Adjustment

The Acura RL has two the wiper arms stop positions. One is the normal position (summer position) and the other is the winter position. To adjust the wiper arms to the winter position, hold the middle of both wiper blades (A) at the same time. Pull on the arms, parallel to the windshield, until they lock in the higher position. To return to the normal position (summer position), push the same area of both arms in the opposite direction.

Winter position

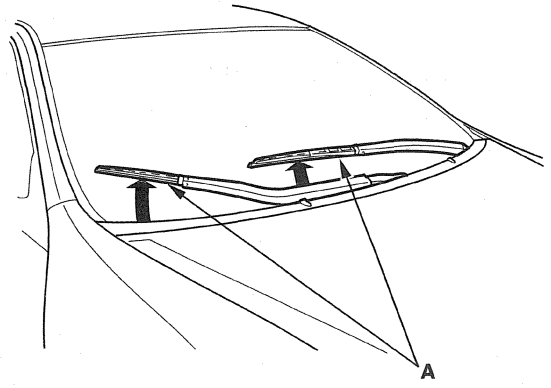

Summer position

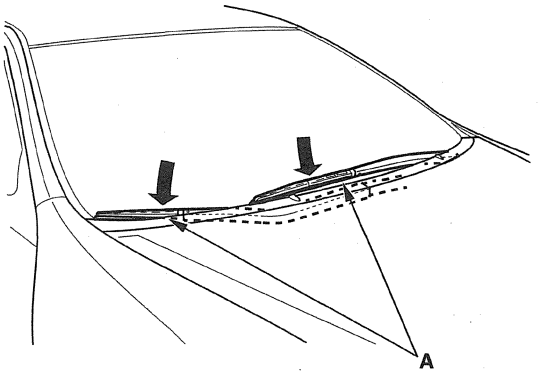

Wiper arms stop position

1. When the wiper arms stop at the automatic stop position, confirm the wiper arms are at the standard position.

   Normal position (Summer position)
   A: Position at about 4.5 in (115 mm) from the top of cowl cover (C)
   B: Position at about 1.1 in (28 mm) from the top of cowl cover (C)

   Winter position
   A': Position at about 9.3 in (237 mm) from the top of cowl cover (C)
   B': Position at about 7.4 in (187 mm) from the top of cowl cover (C)

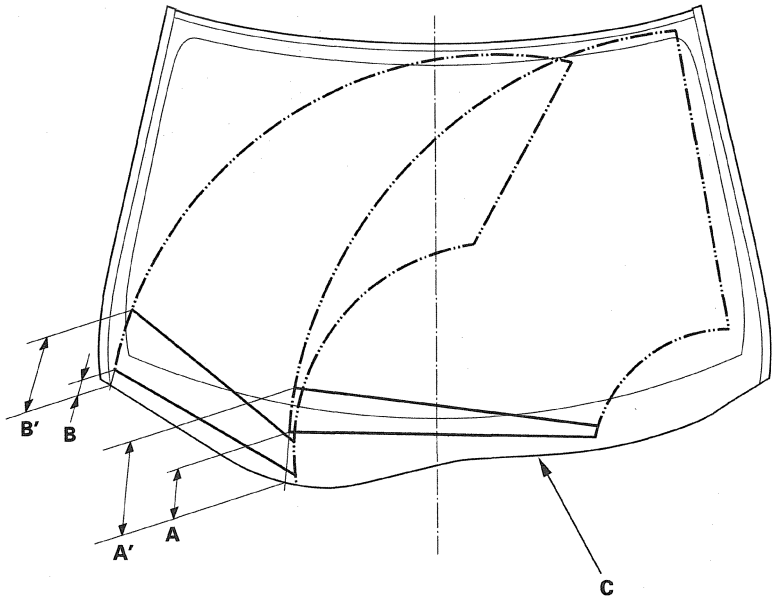

Washer nozzle position

2. When you turn on the washers, confirm 50 % or more of the washer fluid lands within the spray area. If the spray area is not within the standard positions, adjust the nozzles.

   NOTE: The driver's side is symmetrical to the passenger's side.

   a: Position at about 16.7 in (423 mm) from the top of the black ceramic area (E) at the lower windshield
   b: Position at about 13.2 in (336 mm) from the top of the black ceramic area (E) at the lower windshield
   c: Position at about 15.4 in (391 mm) from the top of the black ceramic area (E) at the lower windshield

   d: Position at about 16.5 in (419 mm) from the windshield center line (C)
   e: Position at about 9.4 in (238 mm) from the windshield center line (C)
   f: Position at about 1.7 in (44 mm) from the windshield center line (C)

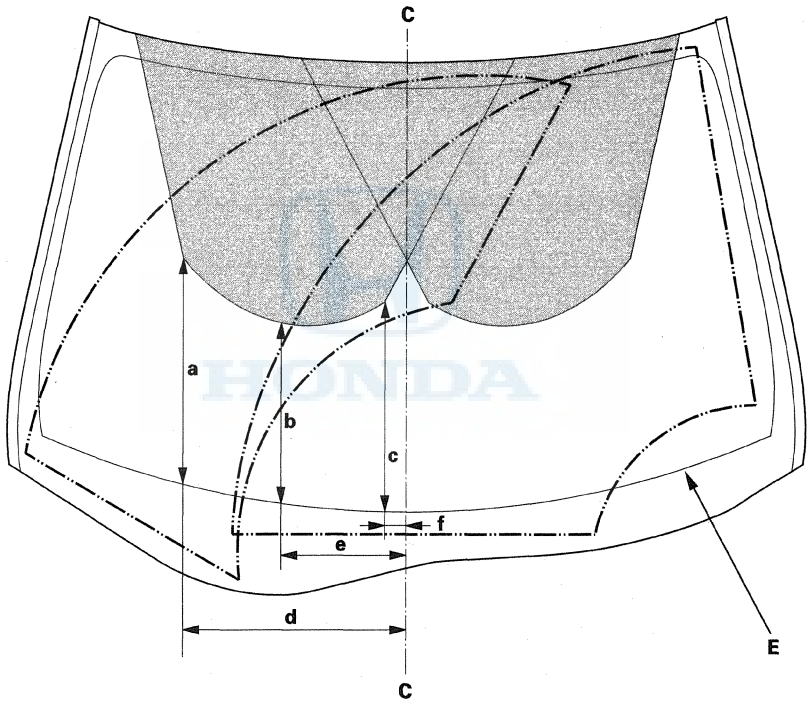

Washer Tube Replacement

Windshield

1. Remove the right inner fender (see page 20-176).
2. Remove the windshield washer nozzles and clips, then remove the tube.

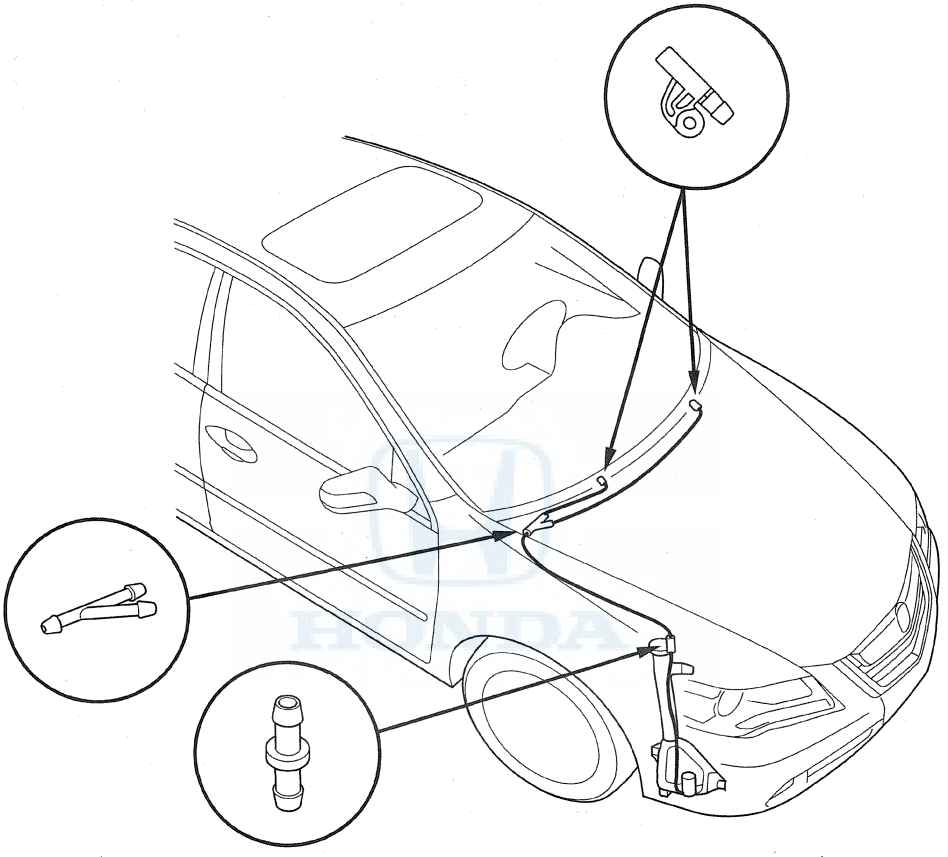

3. Install the parts in the reverse order of removal. Take care not to pinch the washer tube. Check the windshield washer operation.

Headlight Washer

1. Remove the front bumper (see page 20-149).
2. Remove the tube, mounting bolts and washer nozzles.

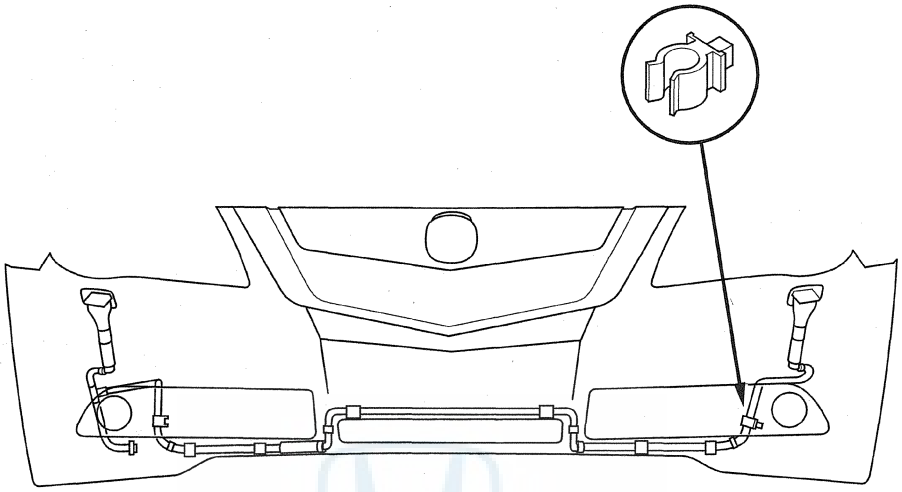

3. Install the parts in the reverse order of removal. Take care not to pinch the washer tube. Check the headlight washer operation.

Component Location Index

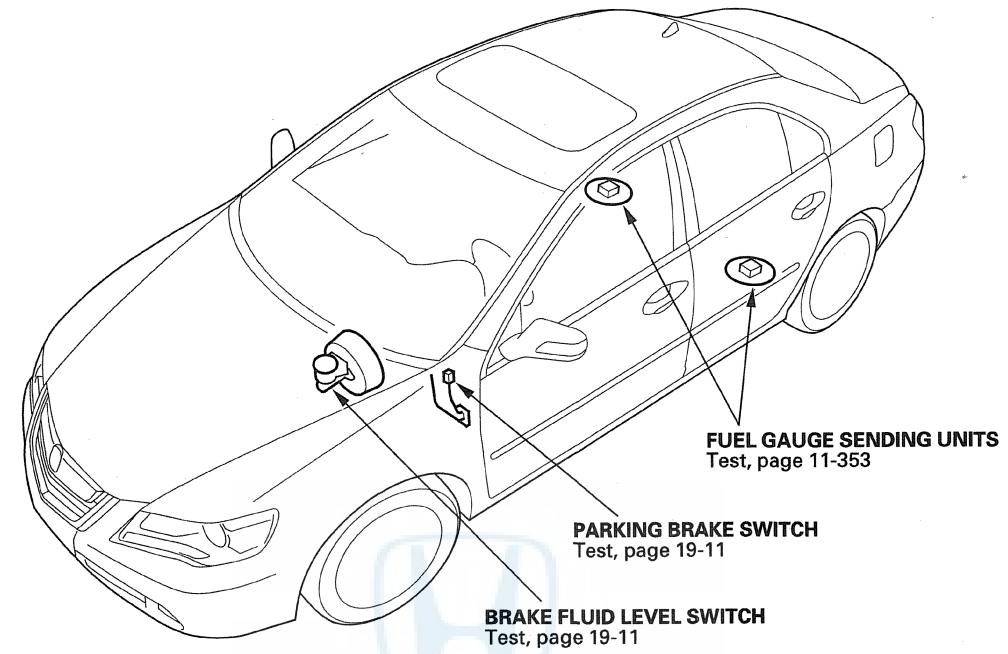

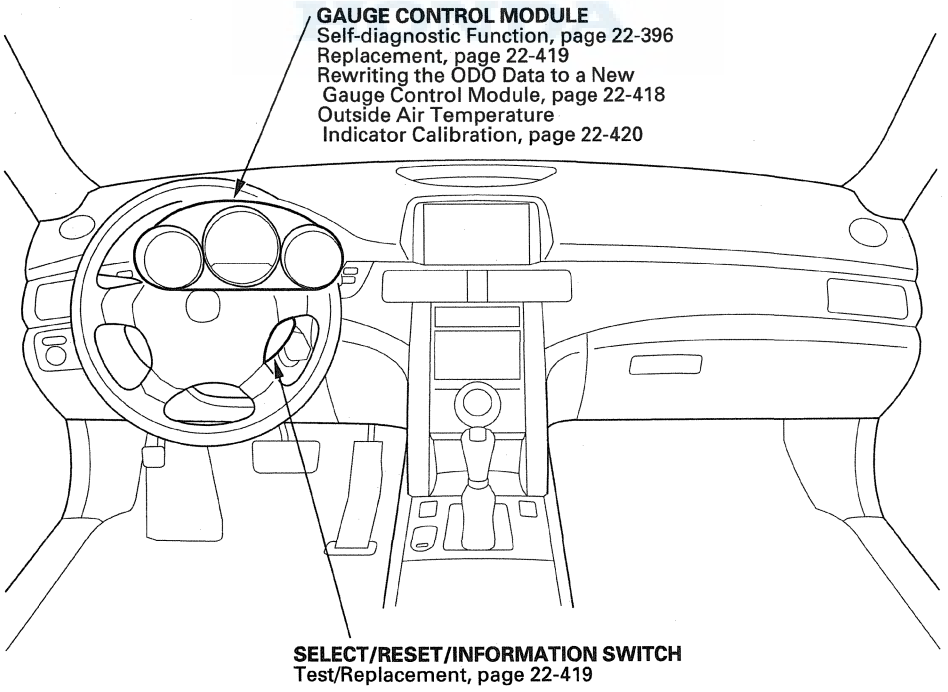

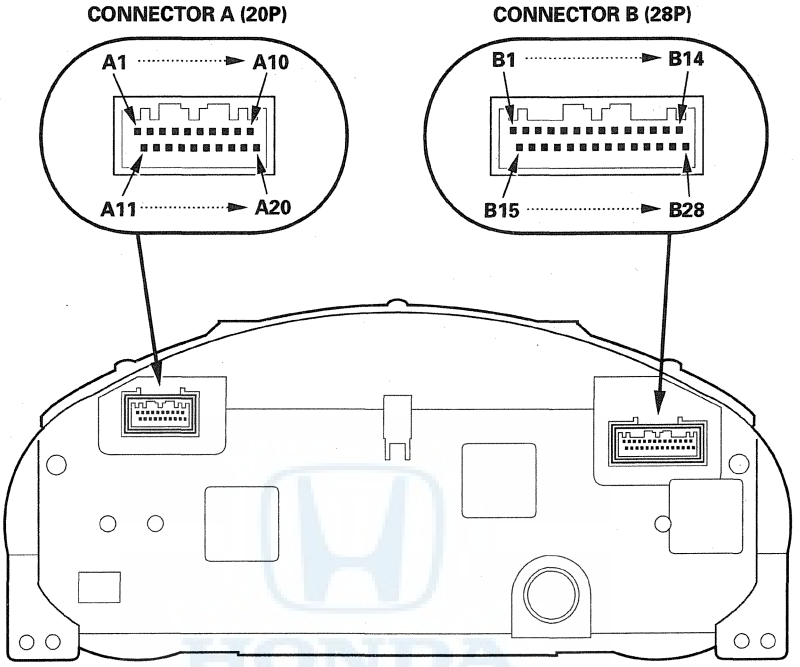
CONNECTOR A (20P)
A1
A10
A11
A20
CONNECTOR B (28P)
B1
B14
B15
B28

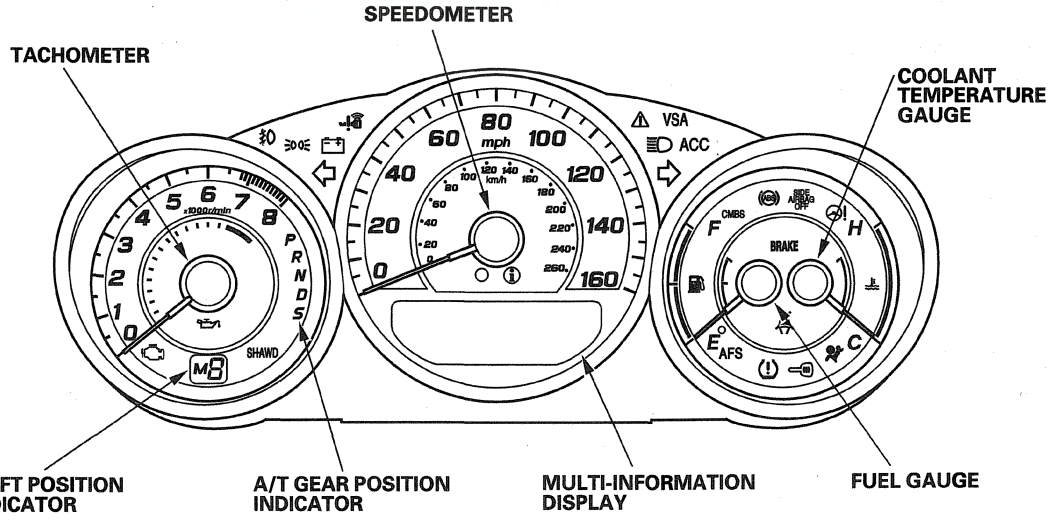
SPEEDOMETER
TACHOMETER
COOLANT TEMPERATURE GAUGE
SHIFT POSITION INDICATOR
A/T GEAR POSITION INDICATOR
MULTI-INFORMATION DISPLAY
FUEL GAUGE
VSA
ACC
mph
BRAKE
SHAWD
P R N D S

Self-diagnostic Function

The gauge control module has a self-diagnostic function.

- The beeper drive circuit check.
- The indicator drive circuit check.
- The switch input test.
- The LCD segments check.
- The gauges drive circuit check (speedometer, tachometer, fuel gauge, coolant temperature gauge).
- The communication line check (of the body-controller area network (B-CAN) communication line and the fast-controller area network (F-CAN) communication line between the gauges).

NOTE: Indicators are also controlled via the communication line.

Entering the Self-diagnostic Function

Before doing the self-diagnostic function, check the No. 7 (10 A) fuse and the No. 21 (10 A) fuse in the driver's under-dash fuse/relay box.

1. Push and hold the SELECT/RESET button.
2. Turn the lighting switch (≡DOE) ON.
3. Turn the ignition switch to ON (II).
4. Within 5 sec., turn the lighting switch (≡DOE) OFF, then ON and OFF again.
5. Within 5 sec., release the SELECT/RESET button, and then push and release the button three times repeatedly.

NOTE:
- While in the self-diagnostic mode, the dash lights brightness controller operates normally.
- While in the self-diagnostic mode, the SELECT/RESET button is used to start the Beeper Drive Circuit Test and the Gauge Drive Circuit Check.
- If the vehicle speed exceeds 1.2 mph (2 km/h) or the ignition switch is turned to LOCK (0), the self-diagnostic mode ends.

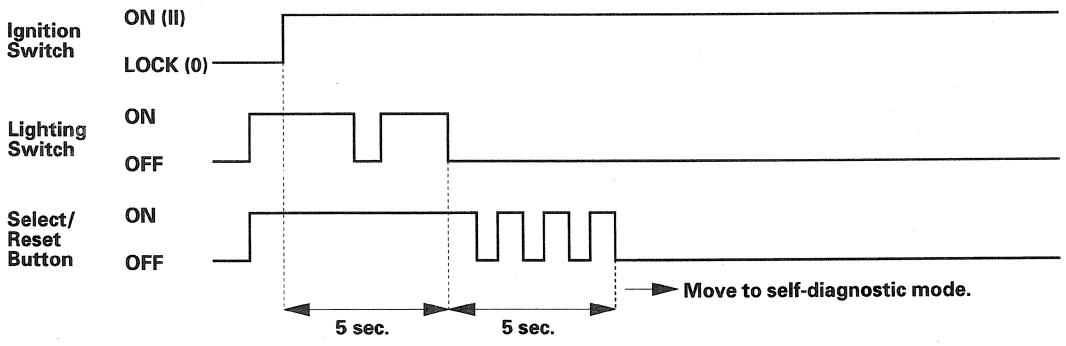

The Indicator Drive Circuit Check

When entering the self-diagnostic mode, these indicators blink:
Seat belt indicator, charging system indicator, low fuel indicator, oil pressure indicator, high beam indicator, VSA indicator, VSA activation indicator, brake system indicator, fog light indicator, lights on indicator, malfunction indicator lamp (MIL), A/T gear position indicator, ABS indicator, SH-AWD indicator, AFS indicator, security indicator, message indicator, SRS indicator, ECPS indicator, cruise main indicator, ACC indicator, CMBS indicator and SHIFT position indicator.

Switch Input Check

After the intermittent beeper sounds at the initial stage of self-diagnostic mode, a beeper sounds continuously while any of the following switch inputs are switched from OFF to ON:
Parking brake switch, VSA OFF switch, cruise control MAIN, SET, RESUME, CANCEL switches, select, previous, next switches, DISTANCE switch A, DISTANCE switch B, CMBS OFF switch, and dash lights brightness controller (VOL (+), VOL (−)).

The LCD [Sport shift and multi-information display (MID)] Segment Check

When entering the self-diagnostic mode, the letter "Checking Now" shows on the MID.



The Gauge Drive Circuit Check

When entering the self-diagnostic mode, the speedometer, the tachometer, the fuel gauge, and the coolant temperature gauge needles sweep from the minimum position to maximum position, then return to the minimum position.

NOTE: After the beeper stops sounding and the gauge needles return to the minimum position, pushing the SELECT/RESET button starts the Beeper Drive Circuit Check (one beep) and the Gauge Drive Circuit Check again.
The check cannot be started again until the gauge needles return to the minimum position.

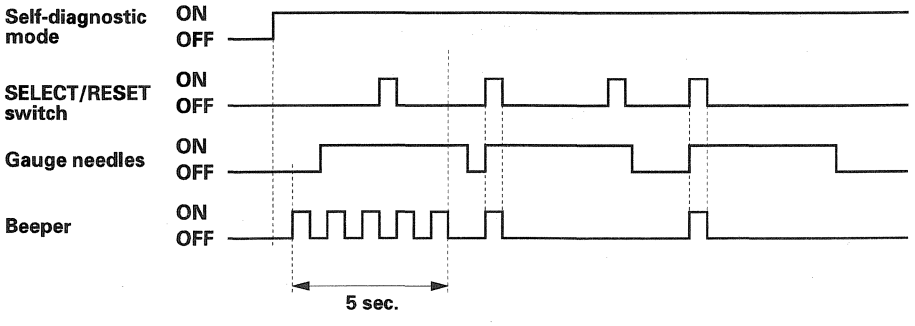

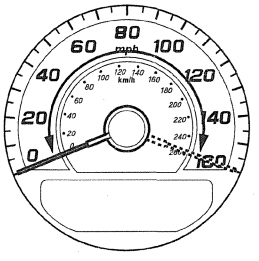

The needles sweep from the minimum position to the maximum position, then return to the minimum position.

If a needle fails to sweep or the beeper does not sound, replace the gauge control module.

(cont'd)

Self-diagnostic Function (cont'd)

The Beeper Drive Circuit Check

When entering the self-diagnostic mode, the beeper sounds five times.

The Communication Line Check

While in the self-diagnostic mode, the Communication Line Check starts after the Multi-Information Display (MID) Check. If the communication line is functioning correctly, "OK" is indicated on the multi-information display (MID). If there is a communication line error, the "NG" is indicated on the MID.

Indication pattern
There is a malfunction in the communication line between the F-CAN and gauge control module. The B-CAN is OK at this time. Check for DTCs in the PCM and troubleshoot any DTCs found. If no DTCs are found, go to B-CAN System Diagnosis Test Mode A (see page 22-131).



There is a malfunction in the communication line between the B-CAN and gauge control module. The F-CAN line is OK at this time. Go to B-CAN System Diagnosis Test Mode A (see page 22-131).



There is a malfunction in the communication line between the gauge control module and the F-CAN and the B-CAN. Check for DTCs in the PCM, and troubleshoot any DTCs found. If no DTCs are found, go to B-CAN System Diagnosis Test Mode A (see page 22-131).



Ending the Self-diagnostic Function

Turn the ignition switch to LOCK (0).

NOTE: If the vehicle speed exceeds 1.2 mph (2 km/h), the self-diagnostic function ends.

Circuit Diagram

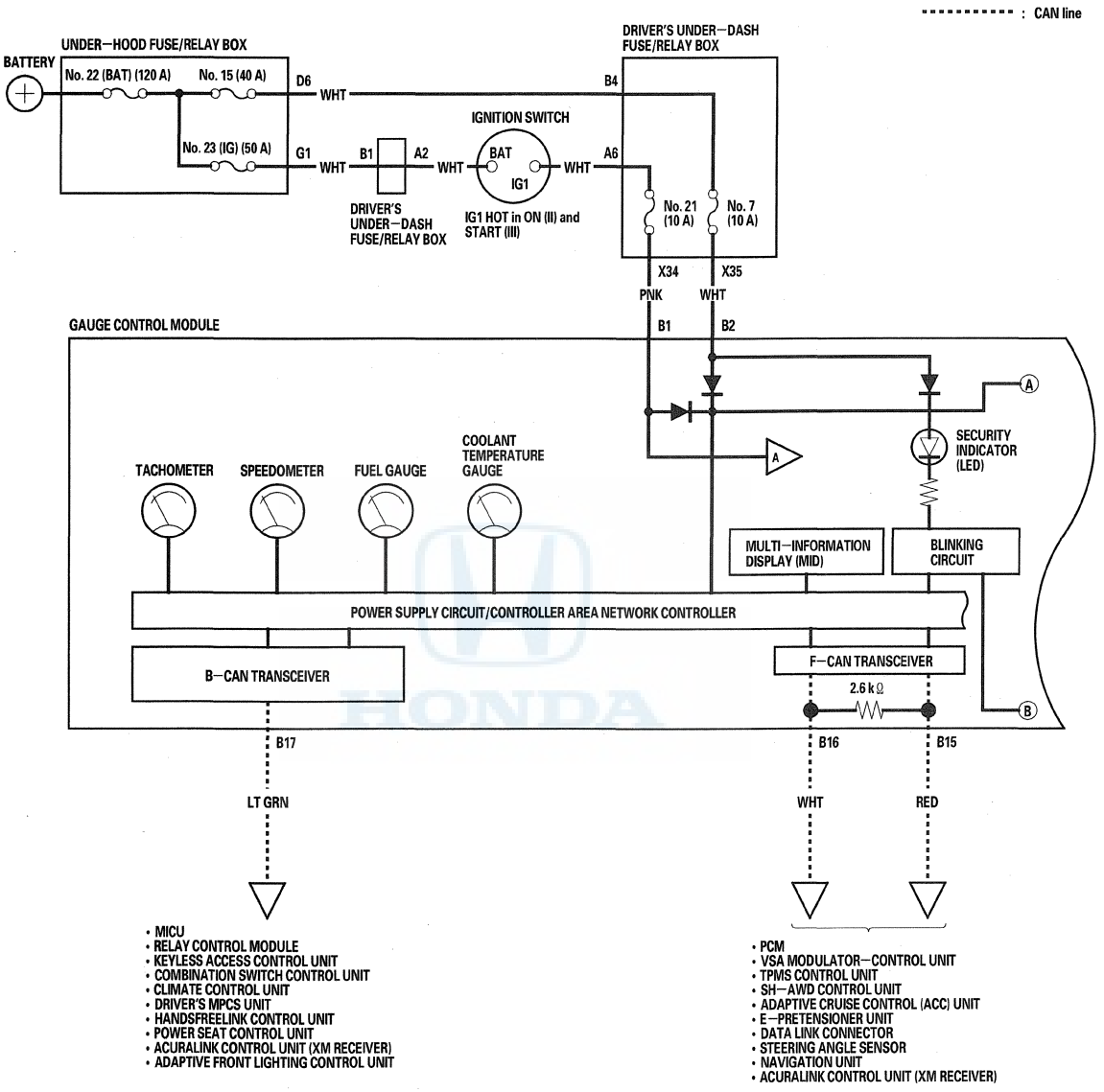

(cont'd)

Circuit Diagram (cont'd)

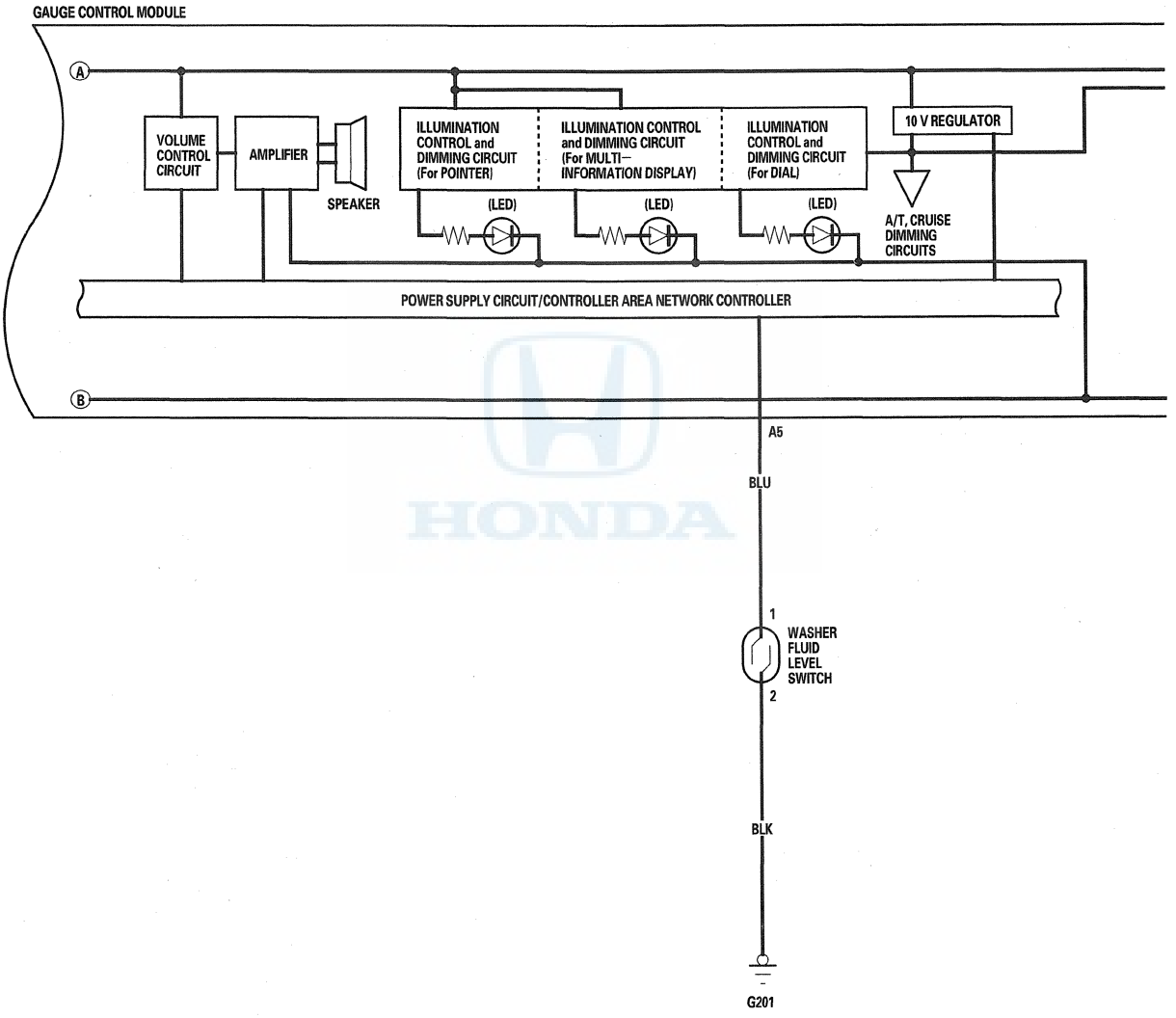

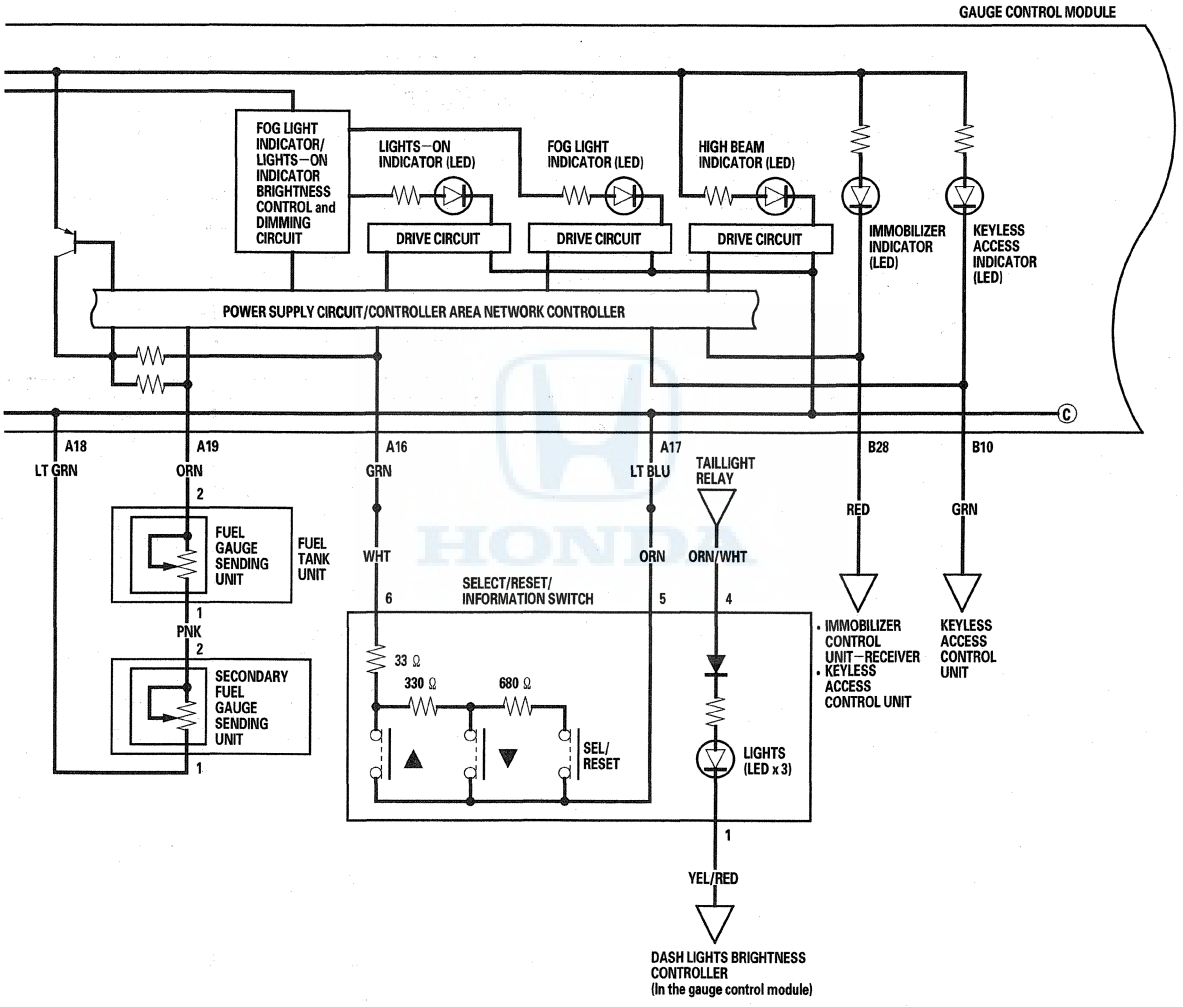
GAUGE CONTROL MODULE
FOG LIGHT INDICATOR/ LIGHTS—ON INDICATOR BRIGHTNESS CONTROL and DIMMING CIRCUIT
LIGHTS—ON INDICATOR (LED)
FOG LIGHT INDICATOR (LED)
HIGH BEAM INDICATOR (LED)
IMMOBILIZER INDICATOR (LED)
KEYLESS ACCESS INDICATOR (LED)
DRIVE CIRCUIT
DRIVE CIRCUIT
DRIVE CIRCUIT
POWER SUPPLY CIRCUIT/CONTROLLER AREA NETWORK CONTROLLER
C
A18
LT GRN
A19
ORN
2
FUEL GAUGE SENDING UNIT
FUEL TANK UNIT
1
PNK
2
SECONDARY FUEL GAUGE SENDING UNIT
1
A16
GRN
WHT
6
SELECT/RESET/ INFORMATION SWITCH
33 Ω
330 Ω
680 Ω
SEL/ RESET
A17
LT BLU
ORN
5
TAILLIGHT RELAY
ORN/WHT
4
LIGHTS (LED x 3)
1
YEL/RED
DASH LIGHTS BRIGHTNESS CONTROLLER (In the gauge control module)
B28
RED
• IMMOBILIZER CONTROL UNIT—RECEIVER
• KEYLESS ACCESS CONTROL UNIT
B10
GRN
KEYLESS ACCESS CONTROL UNIT

(cont'd)

Circuit Diagram (cont'd)

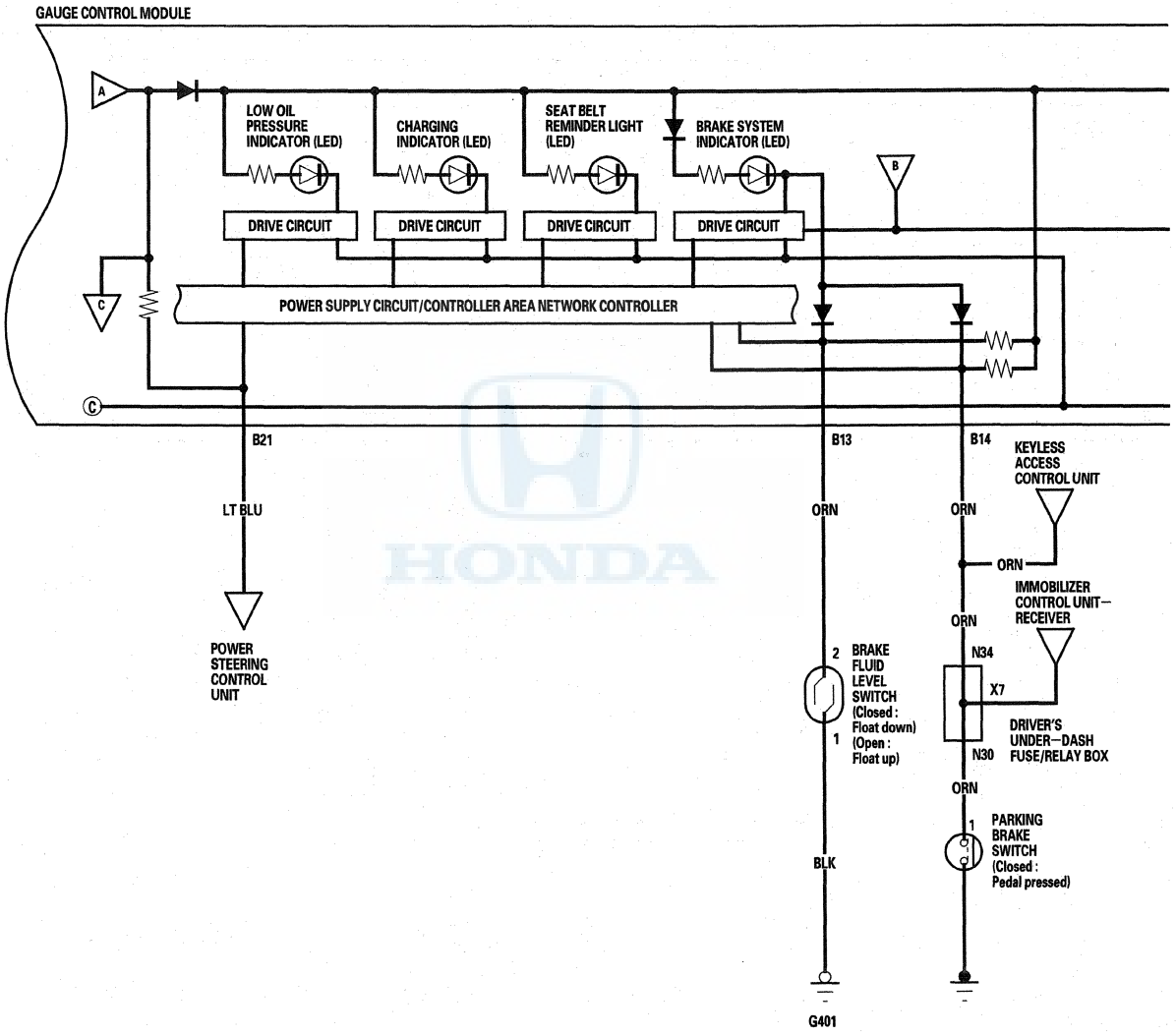

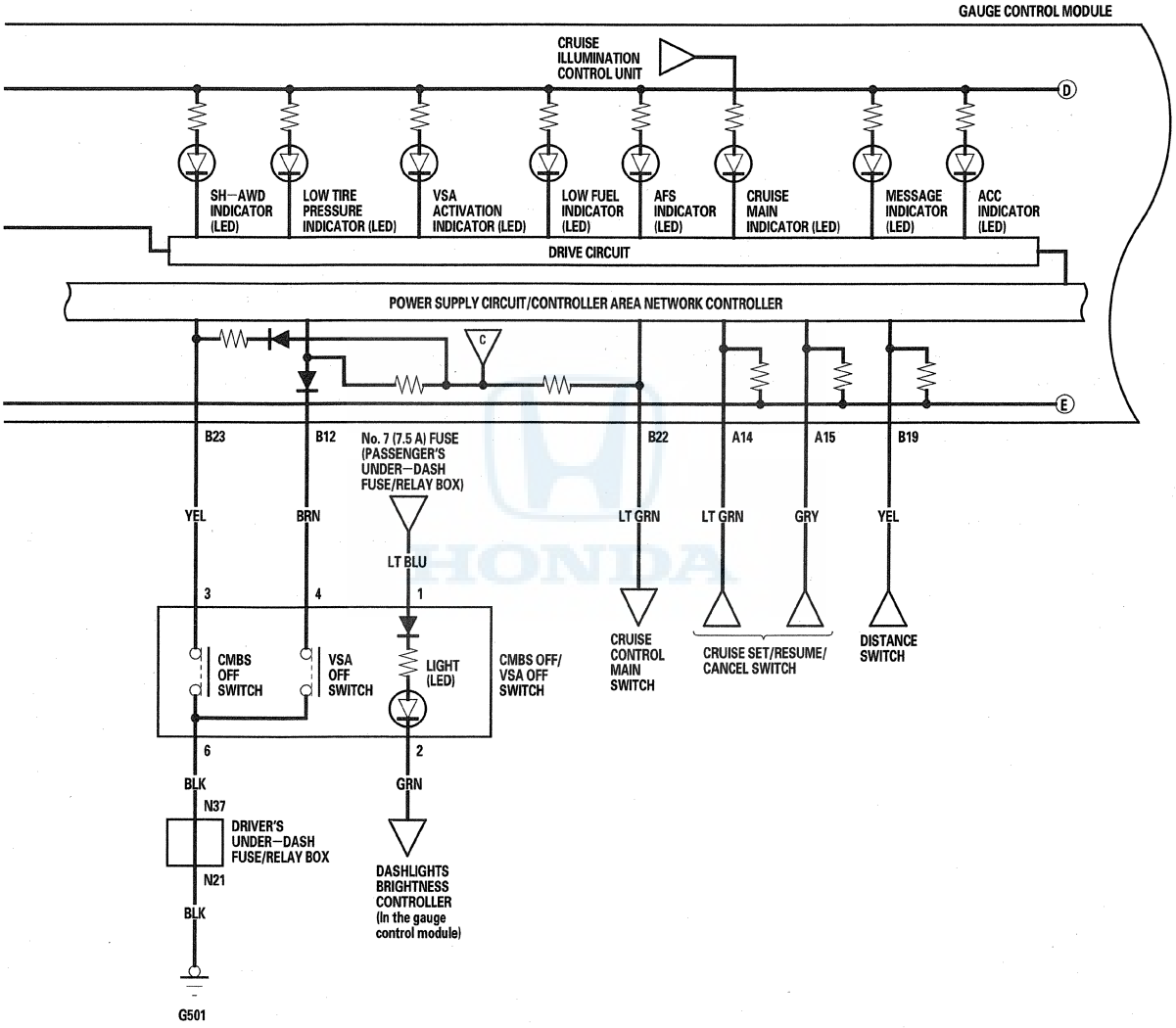
GAUGE CONTROL MODULE
CRUISE ILLUMINATION CONTROL UNIT
D
SH–AWD INDICATOR (LED)
LOW TIRE PRESSURE INDICATOR (LED)
VSA ACTIVATION INDICATOR (LED)
LOW FUEL INDICATOR (LED)
AFS INDICATOR (LED)
CRUISE MAIN INDICATOR (LED)
MESSAGE INDICATOR (LED)
ACC INDICATOR (LED)
DRIVE CIRCUIT
POWER SUPPLY CIRCUIT/CONTROLLER AREA NETWORK CONTROLLER
C
E
B23
B12
No. 7 (7.5 A) FUSE (PASSENGER'S UNDER–DASH FUSE/RELAY BOX)
B22
A14
A15
B19
YEL
BRN
LT BLU
LT GRN
LT GRN
GRY
YEL
3
4
1
CMBS OFF SWITCH
VSA OFF SWITCH
LIGHT (LED)
CMBS OFF/ VSA OFF SWITCH
CRUISE CONTROL MAIN SWITCH
CRUISE SET/RESUME/ CANCEL SWITCH
DISTANCE SWITCH
6
2
BLK
GRN
N37
DRIVER'S UNDER–DASH FUSE/RELAY BOX
N21
BLK
DASHLIGHTS BRIGHTNESS CONTROLLER (In the gauge control module)
G501

(cont'd)

Circuit Diagram (cont'd)

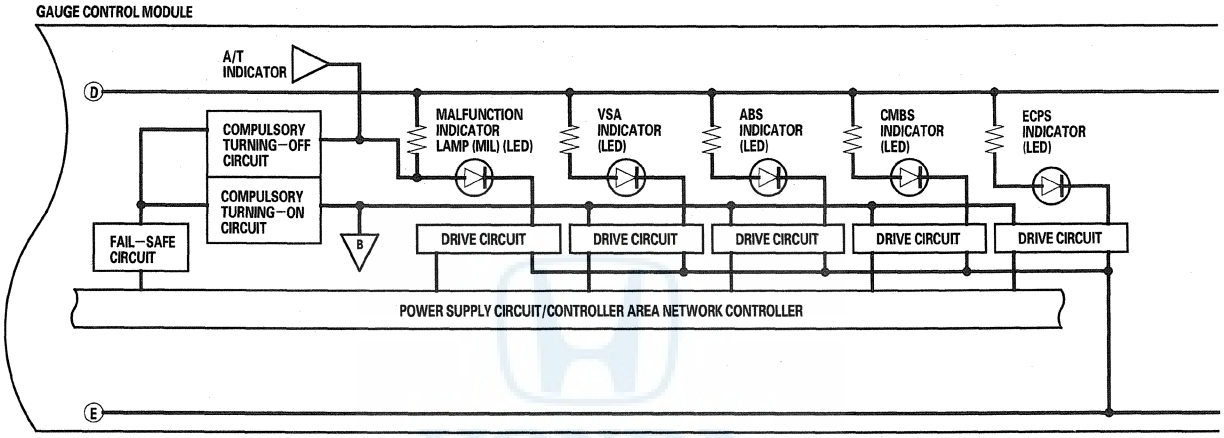

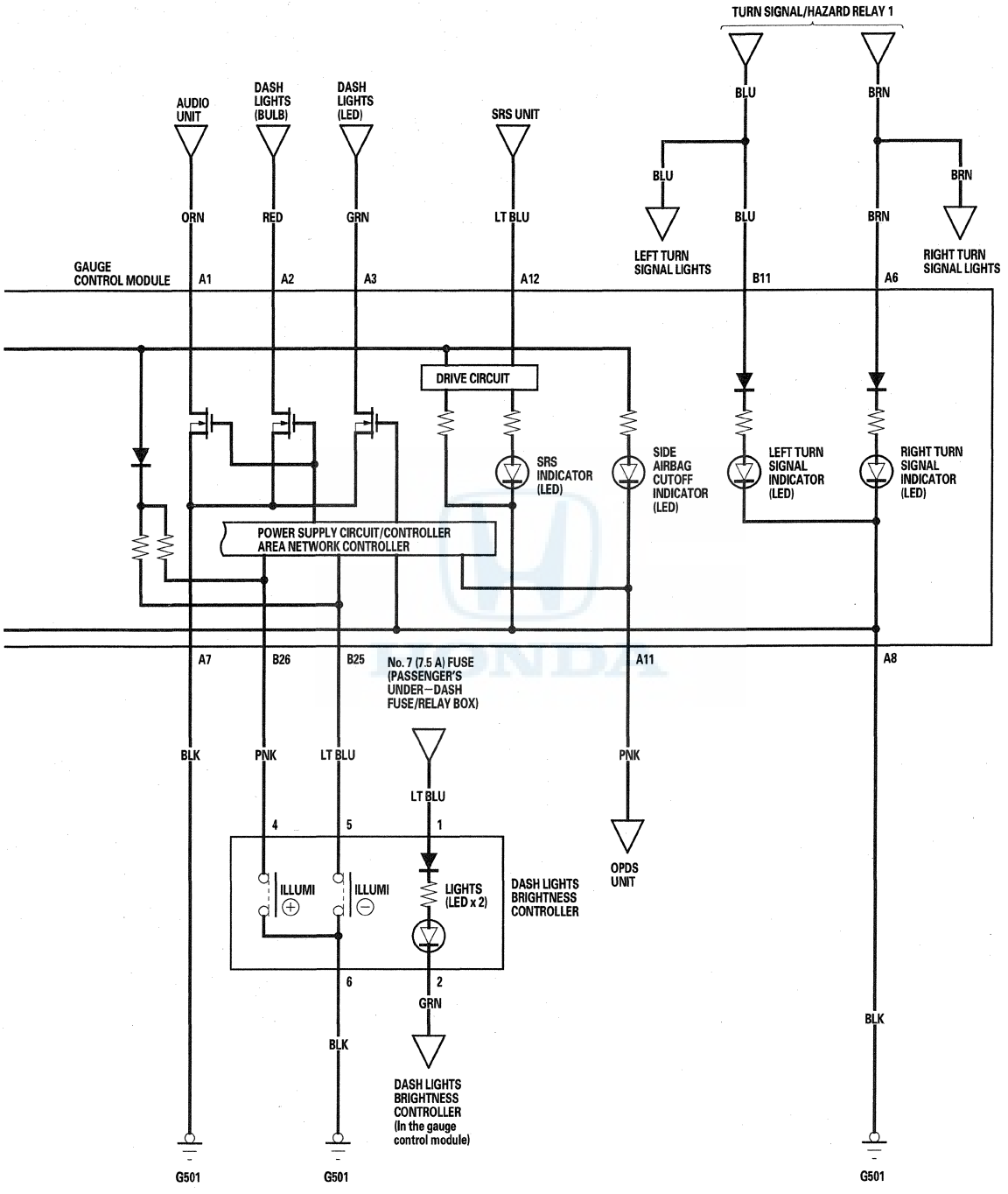
TURN SIGNAL/HAZARD RELAY 1
BLU
BRN
AUDIO UNIT
DASH LIGHTS (BULB)
DASH LIGHTS (LED)
SRS UNIT
BLU
BRN
ORN
RED
GRN
LT BLU
BLU
BRN
LEFT TURN SIGNAL LIGHTS
RIGHT TURN SIGNAL LIGHTS
GAUGE CONTROL MODULE
A1
A2
A3
A12
B11
A6
DRIVE CIRCUIT
SRS INDICATOR (LED)
SIDE AIRBAG CUTOFF INDICATOR (LED)
LEFT TURN SIGNAL INDICATOR (LED)
RIGHT TURN SIGNAL INDICATOR (LED)
POWER SUPPLY CIRCUIT/CONTROLLER AREA NETWORK CONTROLLER
A7
B26
B25
No. 7 (7.5 A) FUSE (PASSENGER'S UNDER-DASH FUSE/RELAY BOX)
A11
A8
BLK
PNK
LT BLU
LT BLU
PNK
4
5
1
ILLUMI
ILLUMI
LIGHTS (LED x 2)
DASH LIGHTS BRIGHTNESS CONTROLLER
OPDS UNIT
6
2
GRN
BLK
BLK
DASH LIGHTS BRIGHTNESS CONTROLLER (In the gauge control module)
G501
G501
G501

DTC Troubleshooting

DTC B1152: Gauge Control Module Internal (EEPROM) Error

1. Clear the DTCs with the HDS.
2. Turn the ignition switch to LOCK (0), and then back to ON (II).
3. Wait for at least 6 seconds.
4. Check for DTCs with the HDS.

   Is DTC B1152 indicated?

   YES—Replace the gauge control module (see page 22-419). ■

   NO—Intermittent failure, the system is OK at this time. ■

DTC B1155: Gauge Control Module Lost Communication With Combination Switch Control Unit (HLSW Message)

DTC B1156: Gauge Control Module Lost Communication With Combination Switch Control Unit (WIPSW Message)

NOTE: If you are troubleshooting multiple DTCs, be sure to follow the instructions in B-CAN System Diagnosis Test Mode A (see page 22-131).

1. Clear the DTCs with the HDS.
2. Turn the ignition switch to LOCK (0), and then back to ON (II).
3. Wait for at least 6 seconds.
4. Check for DTCs with the HDS.

   Is DTC B1155 and/or B1156 indicated?

   YES—Go to step 5.

   NO—Intermittent failure, the system is OK at this time. Check for loose or poor connections between the gauge control module and combination switch control unit. ■

5. Check for DTCs with the HDS.

   Are DTCs B1007, B1062, B1063, and/or B2108 also indicated?

   YES—Do the combination switch control unit input test (see page 22-382). ■

   NO—Do the gauge control module input test (see page 22-155). ■

DTC B1157: Gauge Control Module Lost Communication With MICU (MICU Message)

DTC B1180: Gauge Control Module Lost Communication With MICU (AUTOLT Message)

NOTE: If you are troubleshooting multiple DTCs, be sure to follow the instructions in B-CAN System Diagnosis Test Mode A (see page 22-131).

1. Clear the DTCs with the HDS.
2. Turn the ignition switch to LOCK (0), and then back to ON (II).
3. Wait for at least 6 seconds.
4. Check for DTCs with the HDS.

   Is DTC B1157 and/or B1180 indicated?

   YES—Go to step 5.

   NO—Intermittent failure, the system is OK at this time. Check for loose or poor connections between the gauge control module and MICU. ■
5. Check for DTCs with the HDS.

   Are DTCs B1055, B1056, B1255, B1806, B2107, and/or B2155 also indicated?

   YES—Do the MICU input test (see page 22-152). ■

   NO—Do the gauge control module input test (see page 22-155). ■

DTC B1158: Gauge Control Module Lost Communication With Relay Control Module (RM Message)

NOTE: If you are troubleshooting multiple DTCs, be sure to follow the instructions in B-CAN System Diagnosis Test Mode A (see page 22-131).

1. Clear the DTCs with the HDS.
2. Turn the ignition switch to LOCK (0), and then back to ON (II).
3. Wait for at least 6 seconds.
4. Check for DTCs with the HDS.

   Is DTC B1158 indicated?

   YES—Go to step 5.

   NO—Intermittent failure, the system is OK at this time. Check for loose or poor connections between the gauge control module and relay control module. ■
5. Check for DTCs with the HDS.

   Is DTC B1005 also indicated?

   YES—Do the relay control module input test (see page 22-158). ■

   NO—Do the gauge control module input test (see page 22-155). ■

DTC Troubleshooting (cont'd)

DTC B1161: Gauge Control Module Lost Communication With Keyless Access Control Unit (REMOTE ID Message)

NOTE: If you are troubleshooting multiple DTCs, be sure to follow the instructions in B-CAN System Diagnosis Test Mode A (see page 22-131).

1. Clear the DTCs with the HDS.
2. Turn the ignition switch to LOCK (0), and then back to ON (II).
3. Wait for at least 6 seconds.
4. Check for DTCs with the HDS.

   Is DTC B1161 indicated?

   YES—Go to step 5.

   NO—Intermittent failure, the gauge control system is OK at this time. ■
5. Check for DTCs with the HDS.

   Is DTC B2159 also indicated?

   YES—Do the keyless access control unit input test (see page 22-623). ■

   NO—Do the gauge control module input test (see page 22-155). ■

DTC B1166: Gauge Control Module Lost Communication With Adaptive Front Lighting Control Unit (AFS Message)

NOTE: If you are troubleshooting multiple DTCs, be sure to follow the instructions in B-CAN System Diagnosis Test Mode A (see page 22-131).

1. Clear the DTCs with the HDS.
2. Turn the ignition switch to LOCK (0), and then back to ON (II).
3. Wait for at least 6 seconds.
4. Check for DTCs with the HDS.

   Is DTC B1166 indicated?

   YES—Do the adaptive front lighting control unit input test (see page 22-268). ■

   NO—Do the gauge control module Input test (see page 22-155). ■

DTC B1168: Gauge Control Module Lost Communication With PCM (ENG Message)

DTC B1169: Gauge Control Module Lost Communication With the PCM (A/T Message)

DTC B1178: F-CAN Communication Error

NOTE: If you are troubleshooting multiple DTCs, be sure to follow the instructions in B-CAN System Diagnosis Test Mode A (see page 22-131).

1. Clear the DTCs with the HDS.
2. Turn the ignition switch to LOCK (0), and then back to ON (II).
3. Wait for at least 6 seconds.
4. Check for DTCs with the HDS.

   Are DTCs B1168, B1169, and/or B1178 indicated?

   YES—Go to step 5.

   NO—Intermittent failure, the system is OK at this time. Check for loose or poor connection between the gauge control module and PCM. ■
5. Check for Fuel and Emissions Systems DTCs with the HDS.

   Are there any DTCs indicated?

   YES—Go to the indicated DTCs troubleshooting, then recheck. ■

   NO—Go to step 6.
6. Turn the ignition switch to LOCK (0).
7. Disconnect gauge control module connector B (28P).
8. Short the SCS line with the HDS.
9. Disconnect PCM connector E (31P).
10. Check for continuity between gauge control module connector B (28P) terminals No. 15 and No. 16 and PCM connector terminals E15 and E26 individually.

GAUGE CONTROL MODULE CONNECTOR B (28P)
Wire side of female terminals

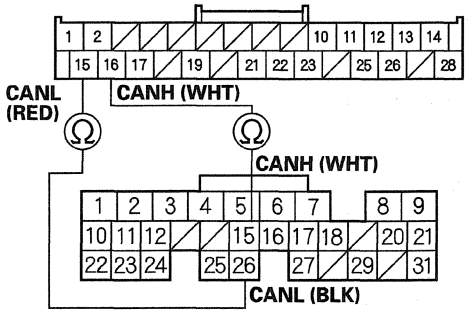

PCM CONNECTOR E (31P)
Wire side of female terminals

Is there continuity?

YES—Update the PCM if it does not have the latest software (see page 11-230), or substitute a known-good PCM (see page 11-7), and recheck. If the indication goes away, replace the original PCM (see page 11-232). If the DTC is still present, replace the gauge control module (see page 22-419). ■

NO—Repair an open in the wire. ■

DTC Troubleshooting (cont'd)

DTC B1170: Gauge Control Module Lost Communication With VSA/ABS Modulator-Control Unit (VSA/ABS Message)

NOTE: If you are troubleshooting multiple DTCs, be sure to follow the instructions in B-CAN System Diagnosis Test Mode A (see page 22-131).

1. Clear the DTCs with the HDS.
2. Turn the ignition switch to LOCK (0), and then back to ON (II).
3. Check for DTCs with the HDS.

   Is DTC B1170 indicated?

   YES—Go to step 4.

   NO—Intermittent failure, the F-CAN communication line is OK at this time. Check for loose or poor connections. If the connections are good, check the battery condition (see page 22-90) and the charging system (see page 4-30). ■
4. Check for VSA System DTCs with the HDS.

   Are any DTCs indicated?

   YES—Go to the indicated DTCs troubleshooting. ■

   NO—Go to step 5.
5. Do the gauge control module input test (see page 22-155).

   Are all inputs OK?

   YES—Go to step 6.

   NO—Repair the faulty input, then recheck for DTCs. ■
6. Substitute a known-good gauge control module.
7. Clear the DTCs with the HDS.
8. Turn the ignition switch to LOCK (0), and then back to ON (II).
9. Check for the DTCs with the HDS.

   Is DTC B1170 indicated?

   YES—Substitute a known-good VSA modulator-control unit, and recheck. ■

   NO—The original gauge control module is faulty; replace it (see page 22-419). ■

DTC B1171: Gauge Control Module Lost Communication With Adaptive Cruise Control Unit (ACC Message)

NOTE: If you are troubleshooting multiple DTCs, be sure to follow the instructions in B-CAN System Diagnosis Test Mode A (see page 22-131).

1. Clear the DTCs with the HDS.
2. Turn the ignition switch to LOCK (0), and then back to ON (II).
3. Check for the DTCs with the HDS.

   Is DTC B1171 indicated?

   YES—Go to step 4.

   NO—Intermittent failure, the F-CAN communication line is OK at this time. Check for loose or poor connections. If the connections are good, check the battery condition (see page 22-90) and the charging system (see page 4-30). ■
4. Check for Adaptive Cruise Control System DTCs with the HDS.

   Are any DTCs indicated?

   YES—Go to the indicated DTCs troubleshooting. ■

   NO—Go to step 5.
5. Do the gauge control module input test (see page 22-155).

   Are all inputs OK?

   YES—Go to step 6.

   NO—Repair the faulty input, then recheck for DTCs. ■
6. Substitute a known-good gauge control module.
7. Clear the DTCs with the HDS.
8. Turn the ignition switch to LOCK (0), and then back to ON (II).
9. Check for DTCs with the HDS.

   Is DTC B1171 indicated?

   YES—Substitute a known-good adaptive cruise control unit, and recheck. ■

   NO—The original gauge control module is faulty; replace it (see page 22-419). ■

DTC Troubleshooting (cont'd)

DTC B1173: Gauge Control Module Lost Communication With TPMS Control Unit (TPMS Message)

NOTE: If you are troubleshooting multiple DTCs, be sure to follow the instructions in B-CAN System Diagnosis Test Mode A (see page 22-131).

1. Clear the DTCs with the HDS.
2. Turn the ignition switch to LOCK (0), and then back to ON (II).
3. Check for DTCs with the HDS.

   Is DTC B1173 indicated?

   YES—Go to step 4.

   NO—Intermittent failure, the F-CAN communication line is OK at this time. Check for loose or poor connections. If the connections are good, check the battery condition (see page 22-90) and the charging system (see page 4-30). ■
4. Check for TPMS DTCs with the HDS.

   Are any DTCs indicated?

   YES—Go to the indicated DTCs troubleshooting. ■

   NO—Go to step 5.
5. Do the gauge control module input test (see page 22-155).

   Are all inputs OK?

   YES—Go to step 6.

   NO—Repair the faulty input, then recheck for DTCs. ■
6. Substitute a known-good gauge control module.
7. Clear the DTCs with the HDS.
8. Turn the ignition switch to LOCK (0), and then back to ON (II).
9. Check for DTCs with the HDS.

   Is DTC B1173 indicated?

   YES—Substitute a known-good TPMS control unit, and recheck. ■

   NO—The original gauge control module is faulty; replace it (see page 22-419). ■

DTC B1175: Fuel Level Sensor (Fuel Gauge Sending Unit) Circuit Open

NOTE: If you are troubleshooting multiple DTCs, be sure to follow the instructions in B-CAN System Diagnosis Test Mode A (see page 22-131).

1. Clear the DTCs with the HDS.
2. Turn the ignition switch to LOCK (0), and then back to ON (II).
3. Wait for at least 30 seconds.
4. Check for DTCs with the HDS.

   Is DTC B1175 indicated?

   YES—Go to step 5.

   NO—Intermittent failure, the gauge control module is OK at this time. Check for loose or poor connections. ■

5. Do the fuel gauge sending unit test (see page 11-353).

   Is the fuel gauge sending unit OK?

   YES—Go to step 6.

   NO—Replace the fuel gauge sending unit. ■

6. Turn the ignition switch to LOCK (0).
7. Disconnect the fuel pump 5P connector (see page 11-353).
8. Disconnect gauge control module connector A (20P).
9. Connect fuel pump 5P connector terminal No. 2 to body ground with a jumper wire.

FUEL PUMP 5P CONNECTOR

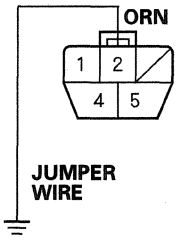

Wire side of female terminals

10. Check for continuity between gauge control module connector A (20P) terminal No. 19 and body ground.

GAUGE CONTROL MODULE CONNECTOR A (20P)

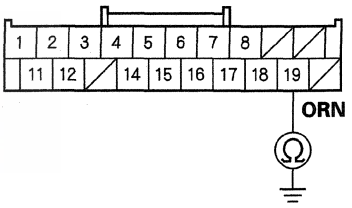

Wire side of female terminals

Is there continuity?

YES—Go to step 11.

NO—Repair an open in the wire. ■

11. Disconnect the secondary fuel gauge sending unit 5P connector (see page 11-353).

(cont'd)

DTC Troubleshooting (cont'd)

12. Connect secondary fuel gauge sending unit 5P connector terminal No. 1 to body ground with a jumper wire.

SECONDARY FUEL GAUGE SENDING UNIT 5P CONNECTOR

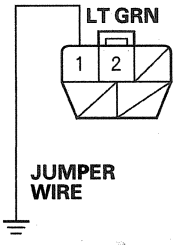

Wire side of female terminals

13. Check for continuity between gauge control module connector A (20P) terminal No. 18 and body ground.

GAUGE CONTROL MODULE CONNECTOR A (20P)

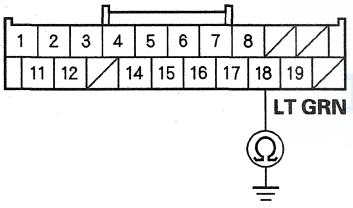

Wire side of female terminals

Is there continuity?

YES—Go to step 14.

NO—Repair an open in the wire. ■

14. Check for continuity between fuel tank unit 5P connector terminal No. 1 and secondary fuel gauge sending unit 5P connector terminal No. 2.

FUEL TANK UNIT 5P CONNECTOR
Wire side of female terminals

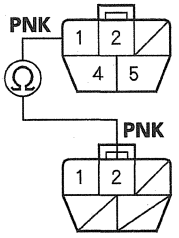

SECONDARY FUEL GAUGE SENDING UNIT 5P CONNECTOR
Wire side of female terminals

Is there continuity?

YES—Replace the gauge control module (see page 22-419). ■

NO—Repair an open in the wire. ■

DTC B1176: Fuel Level Sensor (Fuel Gauge Sending Unit) Circuit Short

NOTE: If you are troubleshooting multiple DTCs, be sure to follow the instructions in B-CAN System Diagnosis Test Mode A (see page 22-131).

1. Clear the DTCs with the HDS.
2. Turn the ignition switch to LOCK (0) and then back to ON (II).
3. Wait for at least 30 seconds.
4. Check for DTCs with the HDS.

   Is DTC B1176 indicated?

   YES—Go to step 5.
   NO—Intermittent failure, the system is OK at this time. Check for loose or poor connections. ■
5. Test the fuel gauge sending unit (see page 11-353).

   Is the fuel gauge sending unit OK?

   YES—Go to step 6.
   NO—Replace the fuel gauge sending unit. ■
6. Turn the ignition switch to LOCK (0).
7. Disconnect the fuel tank unit 5P connector (see page 11-353).
8. Disconnect gauge control module connector A (20P).
9. Check for continuity between fuel tank unit 5P connector terminal No. 2 and body ground.

FUEL TANK UNIT 5P CONNECTOR

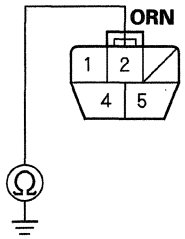

Wire side of female terminals

Is there continuity?

YES—Repair a short to ground in the wire. ■

NO—Go to step 10.

10. Disconnect the secondary fuel gauge sending unit 5P connector (see page 11-353).
11. Check for continuity between secondary fuel gauge sending unit 5P connector terminal No. 1 and body ground.

SECONDARY FUEL GAUGE SENDING UNIT 5P CONNECTOR

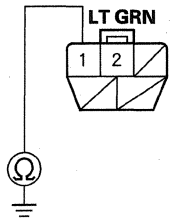

Wire side of female terminals

Is there continuity?

YES—Repair a short to ground in the wire. ■

NO—Go to step 12.

12. Check for continuity between fuel tank unit 5P connector terminal No. 1 and body ground.

FUEL TANK UNIT 5P CONNECTOR

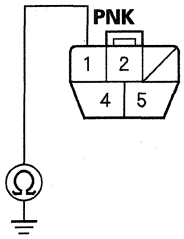

Wire side of female terminals

Is there continuity?

YES—Repair a short to ground in the wire. ■

NO—Replace the gauge control module (see page 22-419). ■

DTC Troubleshooting (cont'd)

DTC B1177: Battery Voltage Abnormal

1. Clear the DTCs with the HDS.
2. Turn the ignition switch to LOCK (0), and then back to ON (II).
3. Check for DTCs with the HDS.

   Is DTCs B1177 indicated?

   YES—Go to step 8.

   NO—Go to step 4.
4. Clear the DTCs with the HDS.
5. Turn the ignition switch to LOCK (0), and then back to ON (II).
6. Crank the engine.
7. Check for DTCs with the HDS.

   Is DTCs B1177 indicated?

   YES—Go to step 8.

   NO—Intermittent failure, the gauge control module and power supply voltage (IG1) that is supplied to the gauge control module are OK at this time. The battery may have been discharged, and recovered. ■
8. Check the battery (see page 22-90) and the charging system.

   Are the battery condition normal and the charging system OK?

   YES—Go to step 9.

   NO—The battery needs a recharge or replacement, or the charging system needs repair. ■
9. Turn the ignition switch to ON (II).
10. With gauge control module connector B (28P) still connected, measure the voltage between terminal No. 1 and body ground.

GAUGE CONTROL MODULE CONNECTOR B (28P)

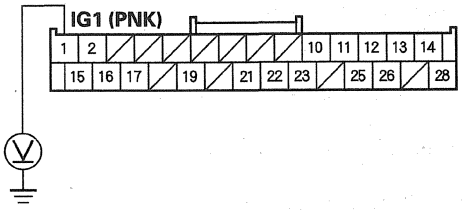

Wire side of female terminals

Is the voltage above 7.5 V?

YES—Replace the gauge control module. ■

NO—Repair an open or high resistance in the IG1 line between the ignition switch and the gauge control module. ■

DTC B1181: Gauge Control Module Lost Communication With Driver's MPCS Unit (DOORSW Message)

DTC B1182: Gauge Control Module Lost Communication With Driver's MPCS Unit (DRLOKSW Message)

NOTE: If you are troubleshooting multiple DTCs, be sure to follow the instructions in B-CAN System Diagnosis Test Mode A (see page 22-131).

1. Clear the DTCs with the HDS.
2. Turn the ignition switch to LOCK (0), and then back to ON (II).
3. Wait for at least 6 seconds.
4. Check for DTCs with the HDS.

   Is DTC B1181 and/or B1182 indicated?

   YES—Go to step 5.

   NO—Intermittent failure, the gauge control module is OK at this time. Check for loose or poor connections. ■
5. Check for DTCs with the HDS.

   Are DTCs B1014, B1015, B1064, B1065, B1613, B1614, and B1811 also indicated?

   YES—Do the driver's MPCS input test (see page 22-159). ■

   NO—Do the gauge control module input test (see page 22-155). ■

Rewriting the ODO Data and Transferring the Maintenance Minder Data to a New Gauge Control Module

NOTE:
- Obtain a new gauge control module before starting the rewriting process. Only new gauges can be rewritten.
- Rewriting is not possible on a gauge control module that will not communicate with the HDS.
- Make sure that the HDS shows the correct VIN for the vehicle you are working on.
- Once you have started this procedure, you must complete it before removing the HDS from the DLC.
- Connect a battery jumper box (not a battery charger) to ensure that correct battery voltage will be maintained.
- Check any official Honda service website for more service information about the odometer.

1. Before replacing the gauge control module, connect the HDS.
2. Select GAUGES from the BODY ELECTRICAL menu with the HDS.
3. Select Gauge Control Module Replacement (ODO Rewrite) from the ADJUSTMENT menu, and follow the instructions on the display to retrieve the ODO value and the Maintenance Minder Information.
4. Replace the gauge control module (see page 22-419).
5. Follow the instructions on the display to write the new ODO value and Maintenance Minder Data to the new gauge control module. If the data transfer fails, refer to the instructions below to release the locked ODO value.

How to release locked odometer mileage to the original gauge control module.

If, after you attempt to transfer mileage to a new gauge assembly, the odometer display has dashes (———), is garbled, or shows an incorrect value, the original gauge control module can be unlocked and restored to its original state so that it can be used again for additional attempts to transfer the milage:

1. Confirm that you have the latest HDS version of software.
2. Make sure that the HDS shows the correct VIN for the vehicle you are working on.
3. With the ignition switch in LOCK (0), reconnect the original gauge control module.
4. Completely re-boot the HDS.
5. Clear any stored DTCs.
6. Navigate to BODY ELECTRIC/GAUGES/ ADJUSTMENT/INSTRUMENT PANEL REPLACEMENT.
7. Select 3. RELEASING LOCKED ODO VALUE.
8. Follow the prompts and the odometer mileage will be restored.
9. Start over and make sure the screen prompts are followed.

Gauge Control Module Replacement

NOTE: Before replacing the gauge control module, do the "Rewriting the ODO Data and Transferring the Maintenance Minder Data to a New Gauge Control Module" (see page 22-418).

1. Remove the instrument fascia (see page 20-99).
2. Remove the screws from the gauge control module (A).

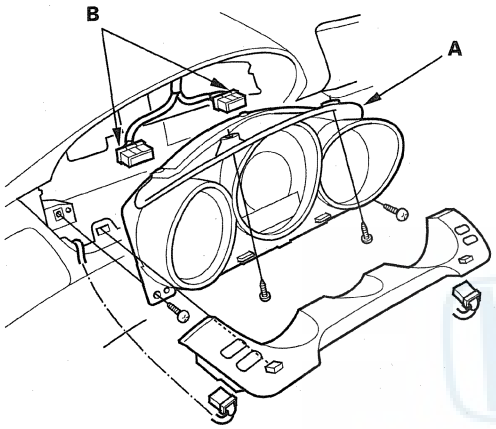

3. Disconnect the connectors (B), and remove the gauge control module.
4. Install the gauge control module in the reverse order of removal.

Select/Reset/Information Switch Test/Replacement

1. Remove the driver's airbag assembly (see page 24-197).
2. Disconnect the 6P connector (A) from the select/reset/information switch (B).

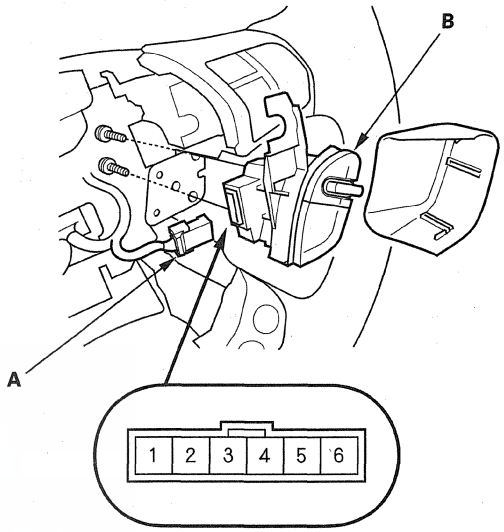

3. Measure the resistance between select/reset/information switch 6P connector terminals No. 6 and No. 5 in each switch position according to the table.

Position	Resistance
▲	About 33 Ω
SEL/RESET	About 1,043 Ω
▼	About 363 Ω

4. If the resistance is not as specified, remove the two screws, and replace the switch.
5. If the switch is OK, but there is a problem with the switch function, check the steering switches harness and cable reel.

Outside Air Temperature Indicator Calibration

NOTE: To test the outside air temperature sensor (see page 21-73).

Description

The outside temperature sensor is located behind the right side of the front bumper. The gauge control module uses measurements from this sensor to display the outside air temperature.
Because of the location of the sensor, it may be affected by heat reflection from the road, engine and radiator heat, or hot exhaust from surrounding traffic.
These conditions can heat soak the outside air temperature sensor, and cause inaccurate readings.
Logic has been written into the gauge control module to help prevent abnormal or fluctuating outside air temperature indicator readings.

Outside Air Temperature Indicator Logic

Initial outside air temperature indication after the ignition switch is turned to ON (II).
If the engine coolant temperature is 140 °F (60 °C) or higher when the ignition switch is turned to ON (II), the outside air temperature indicated the last time the key was turned off is displayed regardless of the current temperature measured by the outside air temperature sensor.

If the engine coolant temperature is less than 140 °F (60 °C) or lower when the ignition switch is turned to ON (II), the current temperature measured by the outside air temperature sensor will be indicated.

Update to the outside air temperature indicator while driving

If the temperature measured by the outside air temperature sensor is greater than the temperature on the outside air temperature indicator, the outside temperature indicator will increase by 1 °F (1 °C) per minute after the vehicle speed is greater than 19 mph (30 km/h) for more than 30 seconds. It will increase until the current outside air temperature is indicated. So, the first change to the outside air temperature indicator is 1 minute and 30 seconds after the vehicle speed is greater than 19 mph (30 km/h). If the vehicle speed drops below 19 mph (30 km/h), the indicator does not update again until the vehicle speed is increased to 19 mph (30 km/h) or more for more than 1 minute and 30 seconds again.

If the outside air temperature is greater than that displayed, the temperature increases 1 °F (1 °C) every 2 seconds until the current outside air temperature displayed.

If the outside air temperature is less than that indicated, the temperature decreases 1 °F (1 °C) every 2 seconds until the current outside air temperature is indicated regardless of vehicle speed.

Troubleshooting

If the indicator displays "———" for more than 2 seconds after selecting the outside air temperature display mode, the gauge control module is not receiving the outside temperature data from the climate control unit over the B-CAN. Check the climate control system or multiplex integrated control system for DTCs (see B-CAN System Diagnosis Test Mode A) (see page 22-131).

Calibration

The outside air temperature indicator's displayed temperature can be recalibrated ±5 °F or ±3 °C to meet the clients expectations.

Calibrate the outside air temperature with the HDS or by custom memory setting.

Component Location Index

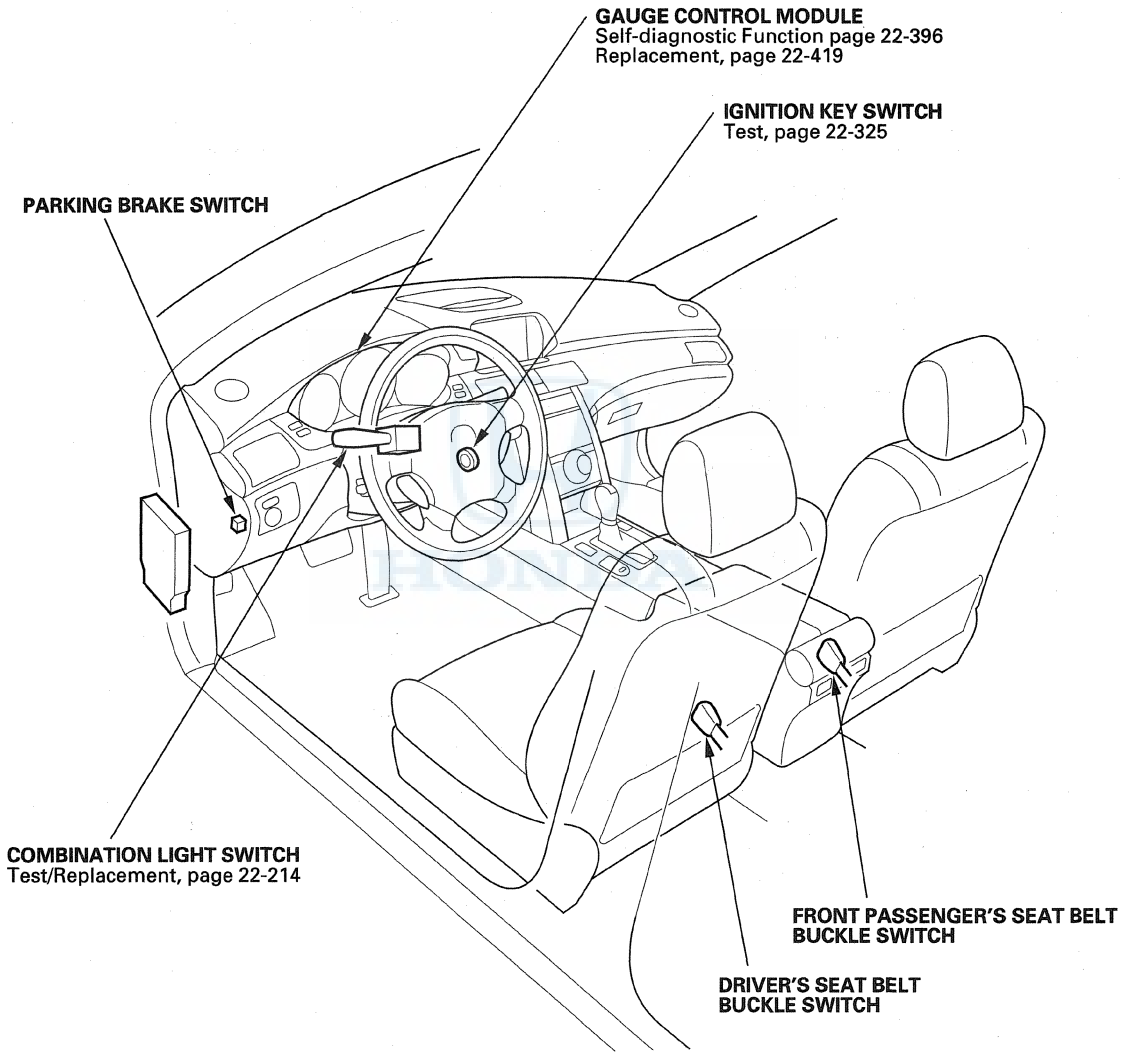

Circuit Diagram

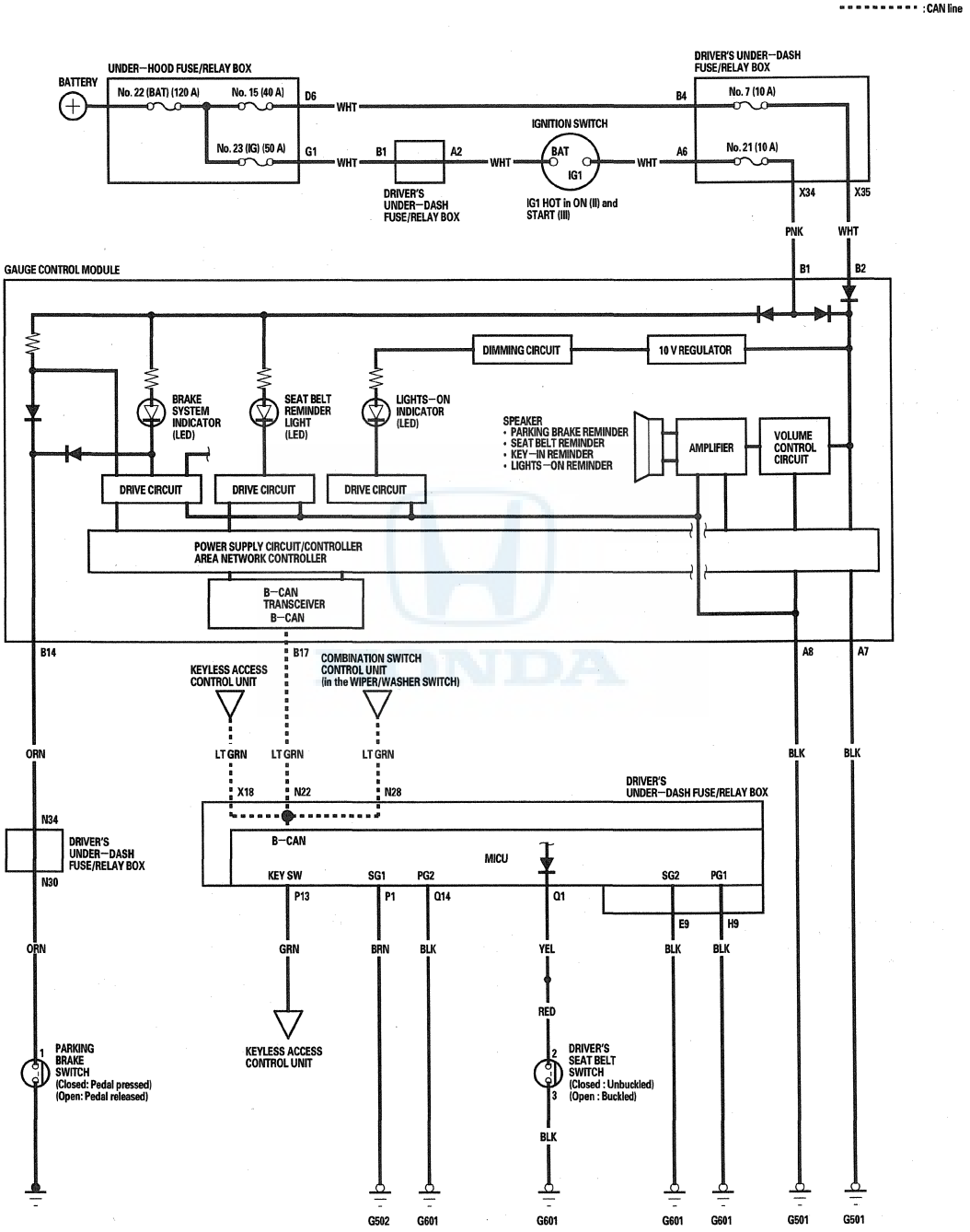

Control Unit Input Test

Multiplex Integrated Control Unit

1. Turn the ignition switch to LOCK (0).
2. Remove the left kick panel (see page 20-67).
3. Disconnect the driver's under-dash fuse/relay box connectors.

   NOTE: All connectors are wire side of female terminals.

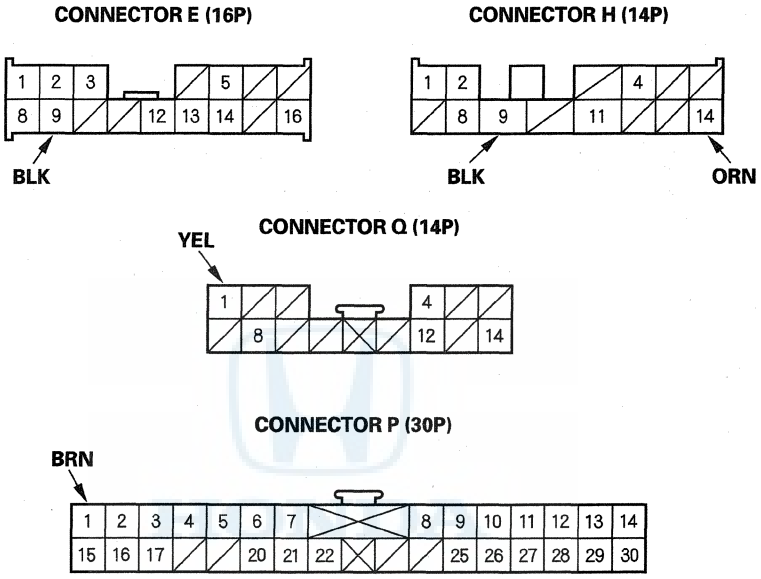

4. Inspect the connector and socket terminals to be sure they are all making good contact.

   - If the terminals are bent, loose or corroded, repair them as necessary, and recheck the system.
   - If the terminals are OK, go to step 5.

(cont'd)

Control Unit Input Test (cont'd)

5. Do these input tests at the following connectors.

   - If any test indicates a problem, find and correct the cause, then recheck the system.
   - If all the input tests prove OK, go to step 6.

Cavity	Wire	Test condition	Test: Desired result	Possible cause if desired result is not obtained
E9·H9·Q14	BLK	Under all conditions	Measure the voltage to ground: There should be less than 0.2 V.	• Poor ground (G601) • An open in the wire
P1	BRN			• Poor ground (G502) • An open in the wire
Q1	YEL	Ignition switch ON (II), driver's seat belt is buckled.	Measure the voltage to ground: There should be at least 5 V.	• Faulty driver's seat belt buckle switch • A short to ground in the wire
		Ignition switch ON (II), driver's seat belt is unbuckled.	Measure the voltage to ground: There should be less than 0.2 V.	• Poor ground (G601) • Faulty driver's seat belt buckle switch • An open in the wire

Gauge Control Module

6. Turn the ignition switch to LOCK (0).
7. Remove the gauge control module (see page 22-419).
8. Disconnect gauge control module connectors A (20P) and B (28P).

GAUGE CONTROL MODULE CONNECTOR A (20P)

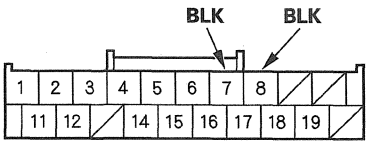

Wire side of female terminals

GAUGE CONTROL MODULE CONNECTOR B (28P)

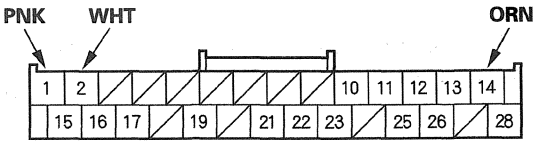

Wire side of female terminals

9. Inspect the connector and socket terminals to be sure they are all making good contact.

   - If the terminals are bent, loose or corroded, repair them as necessary, and recheck the system.
   - If the terminals look OK, go to step 10.

10. Reconnect the connectors to the gauge control module, and do these input tests at the following connectors.

    - If any test indicates a problem, find and correct the cause, then recheck the system.
    - If all the input tests prove OK, go to step 11.

Cavity	Wire	Test condition	Test: Desired result	Possible cause if desired result is not obtained
A7	BLK	Under all conditions	Measure the voltage to ground: There should be less than 0.2 V.	• Poor ground (G501) • An open in the wire
A8	BLK			• Poor ground (G501) • An open in the wire
B1	PNK	Ignition switch ON (II)	Measure the voltage to ground: There should be battery voltage.	• Blown No. 21 (10 A) fuse in the driver's under-dash fuse/relay box • An open in the wire
B2	WHT	Under all conditions	Measure the voltage to ground: There should be battery voltage.	• Blown No. 15 (40 A) fuse in the under-hood fuse/relay box • Blown No. 7 (10 A) fuse in the driver's under-dash fuse/relay box • An open in the wire
B14	ORN	Ignition switch ON (II), parking brake pedal pressed	Measure the voltage to ground: There should be less than 0.2 V.	• Faulty parking brake switch • An open in the wire
		Ignition switch ON (II), parking brake pedal released	Measure the voltage to ground: There should be battery voltage.	• Faulty parking brake switch • A short to ground in the wire

11. Do the gauge self-diagnostic procedure (see page 22-396).

    - If the beeper sounds and the seat belt reminder light flashes, go to step 12.
    - If the beeper does not sound or the seat belt reminder light does not flash, replace the gauge control module (see page 22-419).

12. Substitute a known-good gauge control module, and recheck the system.

    - If the symptom is gone, the gauge control module is faulty; replace it (see page 22-419).
    - If the symptom is still present, the multiplex integrated control unit (MICU) is faulty; replace the driver's under-dash fuse/relay box (see page 22-88).

Rear Window Defogger

Component Location Index

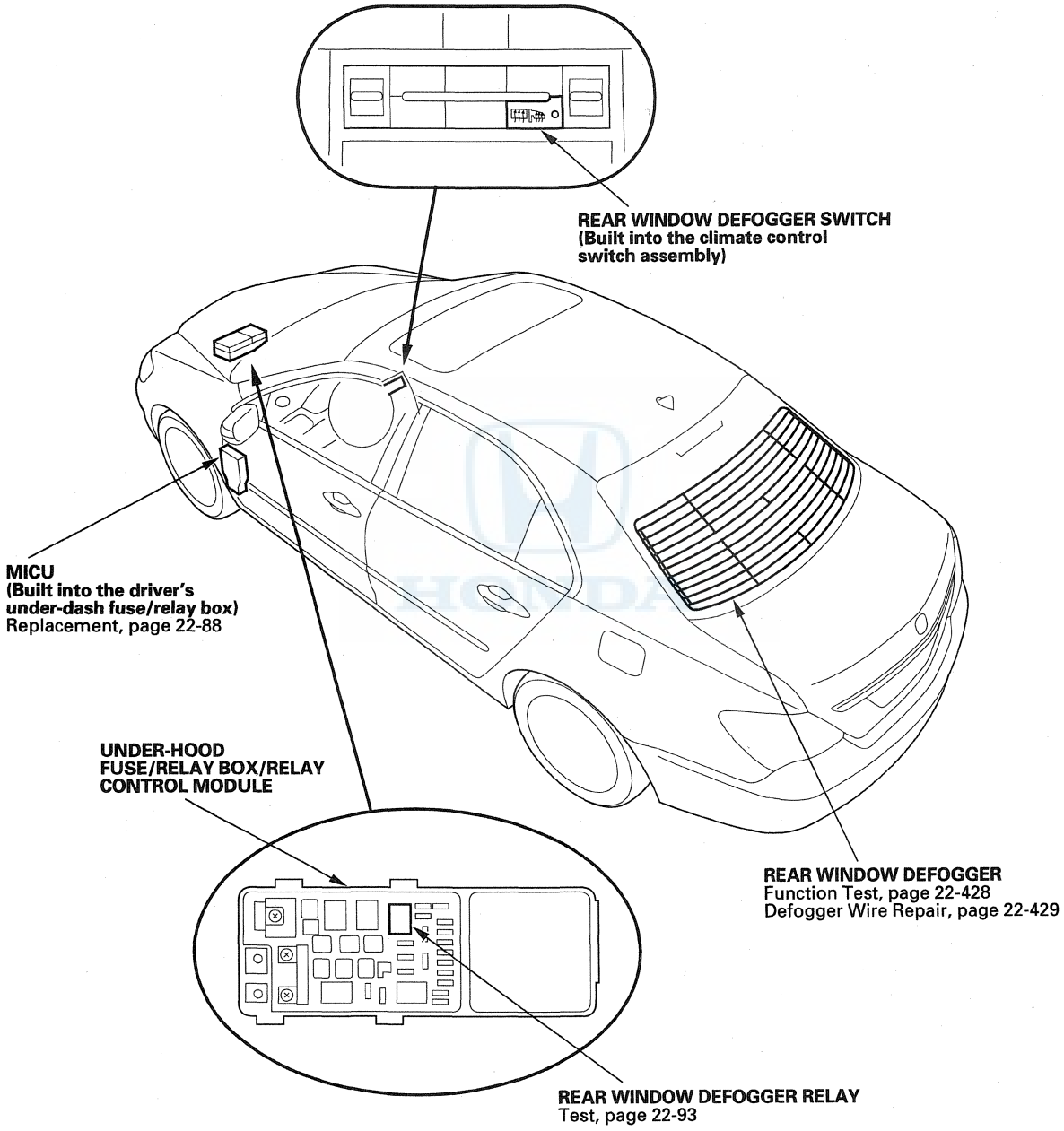

Circuit Diagram

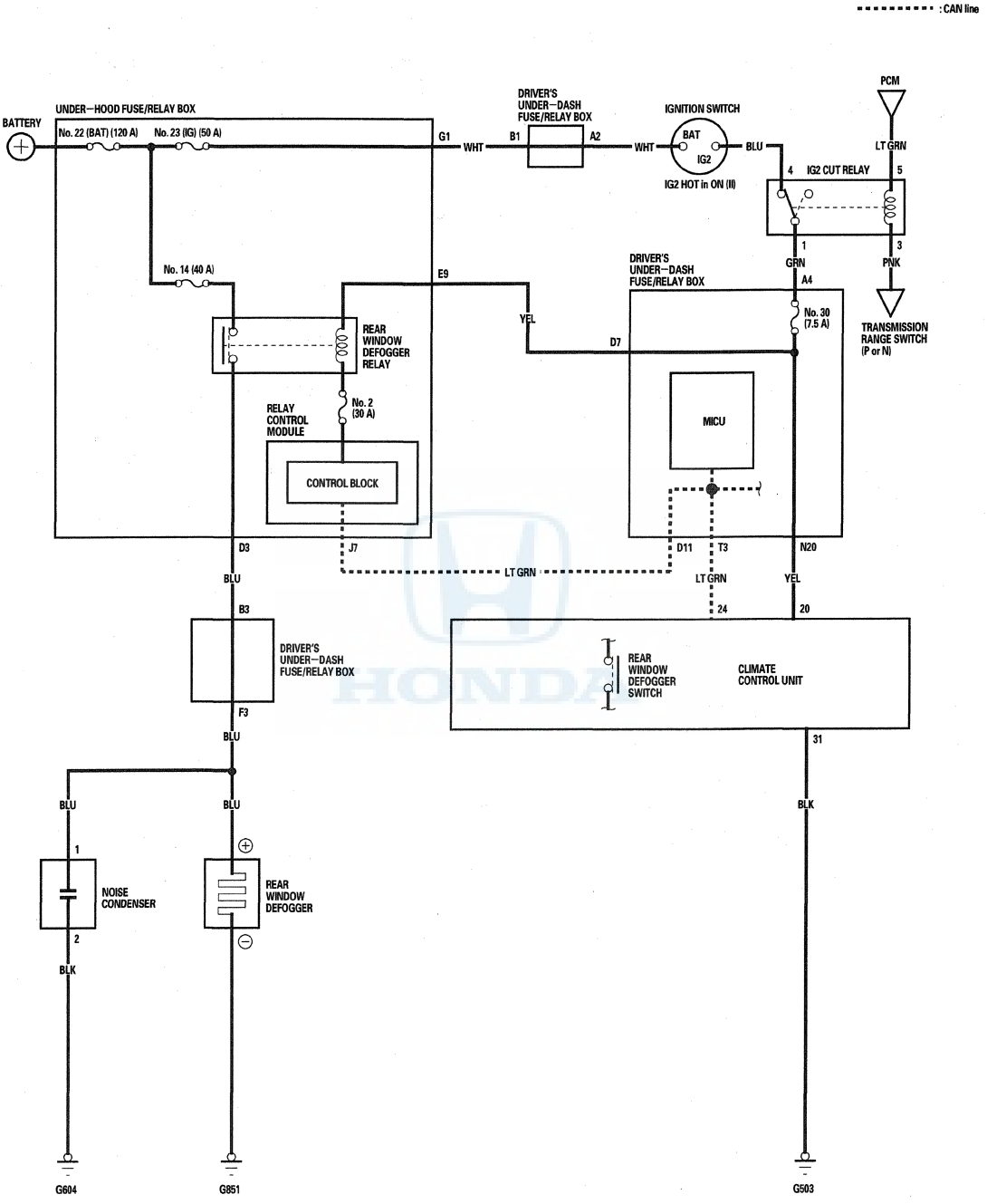

Rear Window Defogger

Function Test

NOTE:
- Before testing, check the No. 14 (40 A) and No. 2 (30 A) fuses in the under-hood fuse/relay box and the No. 30 (7.5 A) fuse in the driver's under-dash fuse/relay box.
- Be careful not to scratch or damage the defogger wires with the tester probe.

1. Turn the ignition switch to ON (II) and then turn the rear window defogger switch ON.

2. Measure the voltage between the positive terminal (A) and body ground. There should be battery voltage.

   - If there is no voltage, check for:
     – Faulty rear window defogger relay (see page 22-93).
     – Faulty climate control unit.
     – Faulty glass antenna coil.
     – An open in the BLU wire to the positive terminal.
   - If there is voltage, go to step 3.

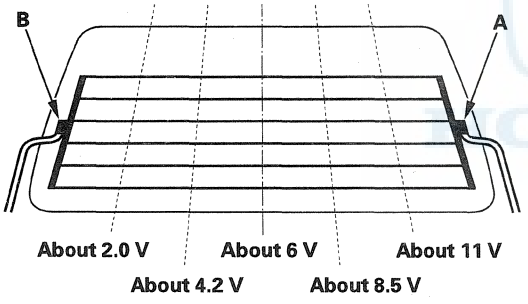

3. Measure the voltage between negative terminal (B) and body ground. There should be less than 0.2 V.

   - If there is less than 0.2 V, go to step 4.
   - If there is more than 0.2 V, check for:
     – Open or high resistance in the wire.
     – Poor ground (G 851).

4. Touch the voltmeter positive probe to each point on each defogger wire, and the negative probe to the negative terminal.

   - If the voltage is as specified, the defogger wire up to that point is OK.
   - If the voltage is not as specified, repair the defogger wire.
     – If it is more than specified at one of the points, there is a break in the negative half of the wire.
     – If it is less than specified at one of the points, there is a break in the positive half of the wire.

Defogger Wire Repair

NOTE: To make an effective repair, the broken section must be no longer than 1 inch (25 mm).

1. Lightly rub the area around the broken section (A) with fine steel wool, then clean it with isopropyl alcohol.

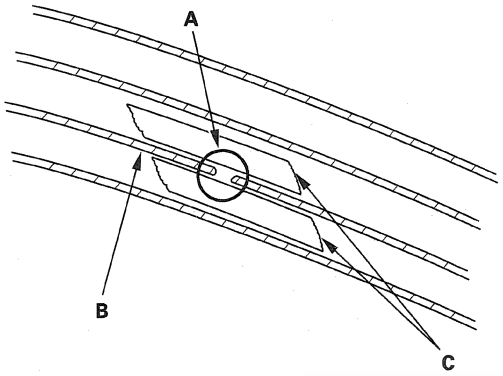

2. Carefully mask above and below the broken portion of the defogger wire (B) with cellophane tape (C).

3. Using a small brush, apply a heavy coat of silver conductive paint (commercially available) (A) extending about 1/8" on both sides of the break. Allow 25 minutes to dry.

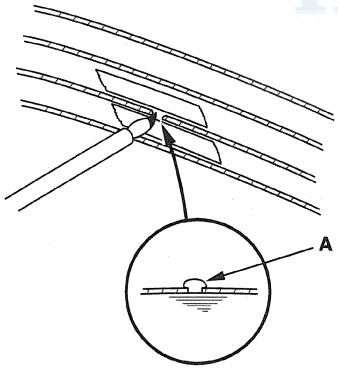

4. Do the function test to confirm that the wire is repaired.

5. Apply a second coat of paint in the same way. Let it dry 3 hours before removing the tape.

Moonroof

Component Location Index

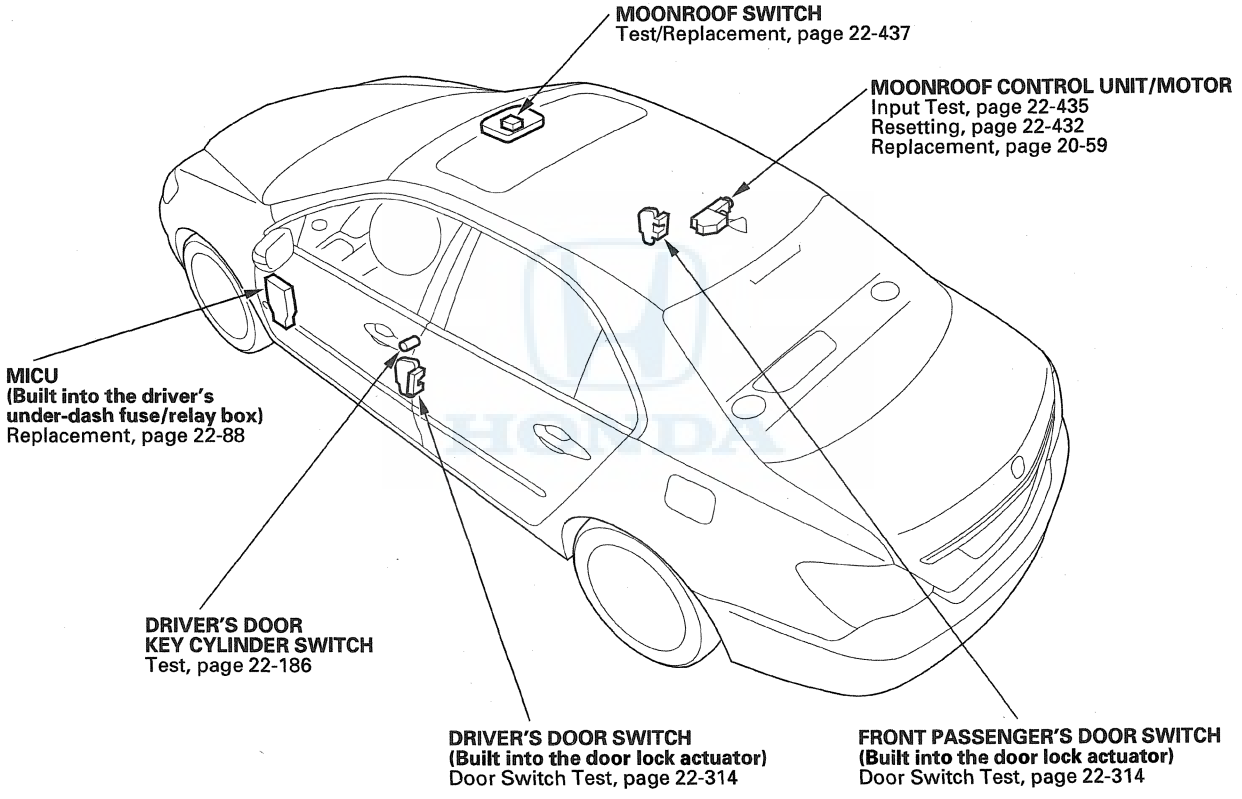

Symptom Troubleshooting Index

Symptom	Diagnostic procedure
Water leaks from moonroof	1. Check for a clogged or detached drain tube. 2. Check for a gap between the glass weatherstrip and the roof panel (see page 20-55). 3. Check for a defective or an improperly installed glass weatherstrip or drain channel. 4. Check for a gap between the drain seal and the roof panel.
Wind noise from moonroof	1. Check for excessive clearance between the glass weatherstrip and the roof panel. 2. Check the glass position adjustment (see page 20-55).
Motor noise from moonroof	1. Check for a loose motor. 2. Check for a worn gear or bearing. 3. Check for a deformed cable assembly. 4. Check for dirt or debris.
Moonroof glass does not move, but motor turns	1. Check for a defective gear or inner cable. 2. Check for foreign matter stuck between the guide rail and the slider. 3. Check for a loose inner cable. 4. Make sure the cable assembly is attached properly.
Moonroof glass does not move and motor does not turn (glass can be moved with 5 mm hex wrench)	1. Check for a blown fuse. 2. Check for a faulty moonroof switch. 3. Check for a run down battery. 4. Check for a defective motor control unit.
Moonroof glass does not stop at proper flush closed position	1. Reset the moonroof control unit (see page 22-432). 2. Check glass position adjustment (see page 20-55).
Moonroof glass moves in a jerking motion (moves 40 mm (1.57 in), stops for 0.4 seconds, and repeats)	Reset the moonroof control unit (see page 22-432).
During auto close operation, moonroof glass reverses when no object is trapped	1. Check for dirt and debris in the track. 2. Reset the moonroof control unit (see page 22-432).
Moonroof glass moves, but there is no AUTO function	Reset the moonroof control unit (see page 22-432).

Resetting the Moonroof Control Unit

Reset the moonroof after doing any of the following actions:

- The moonroof was moved manually while the battery was dead or disconnected.
- The moonroof motor was replaced with a new one.
- Any components related to the moonroof were replaced or removed and reinstalled.
  - Wind deflector
  - Moonroof glass
  - Moonroof seal
  - Moonroof glass bracket
  - Moonroof cables, etc.

To reset the moonroof control unit, do these steps:

1. Close all doors, and leave them closed until the procedure is complete.
2. Turn the ignition switch to LOCK (0).
3. Press and hold the tilt switch, and turn the ignition switch to ON (II).
4. Release the tilt switch.
5. Repeat steps 2 to 4 four times.
6. Check if the AUTO OPEN and AUTO CLOSE functions still work. If they still work, the AUTO functions have not been cleared, go back to step 1. If the AUTO functions have been cleared, go to step 7.
7. Press and hold the moonroof open switch for 3 additional seconds after the moonroof is fully opened.
8. Press and hold the moonroof close switch for 3 additional seconds after the moonroof is fully closed (tilted).
9. Confirm that the moonroof control unit is reset by using the moonroof AUTO OPEN and AUTO CLOSE function.

Circuit Diagram

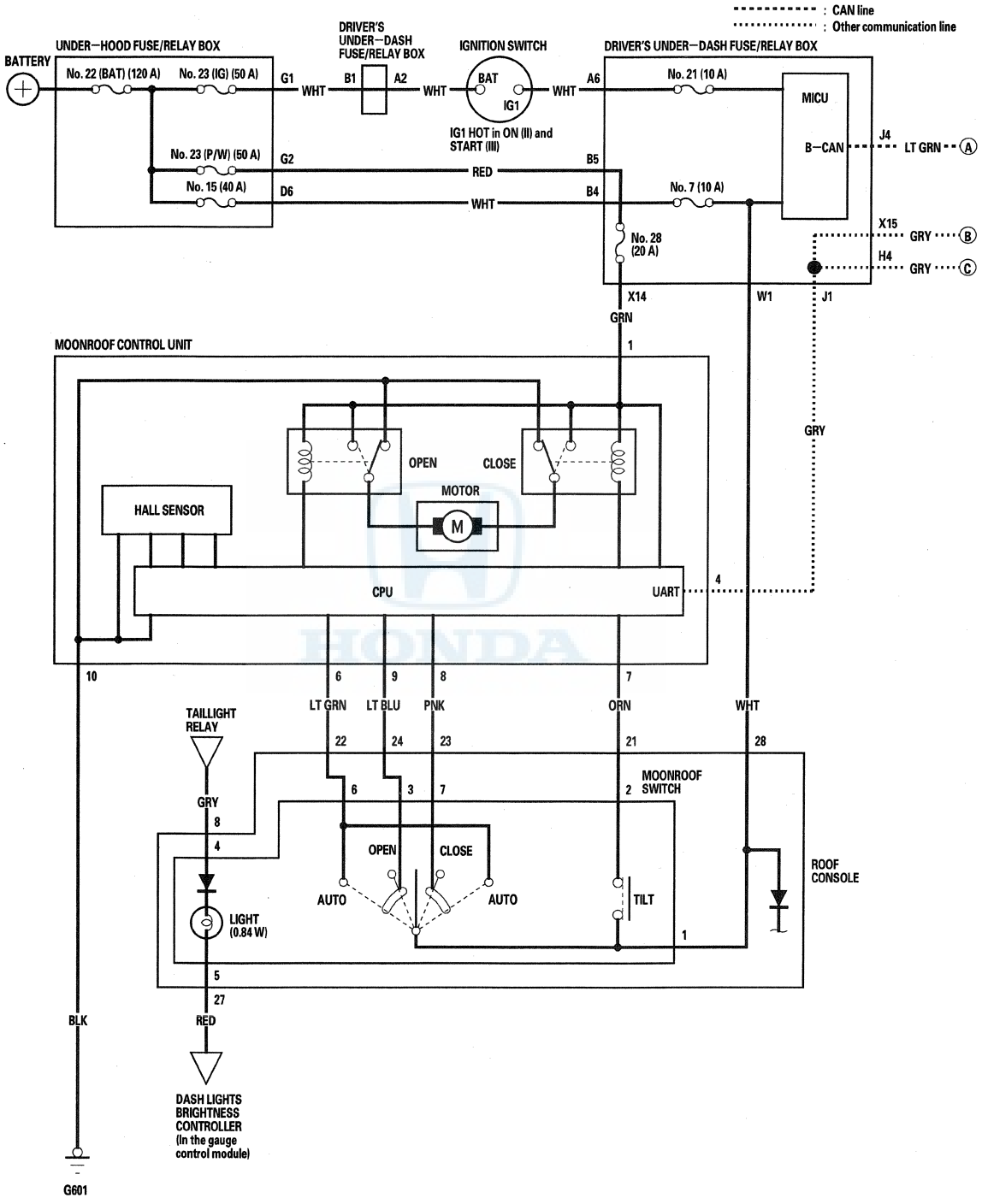

(cont'd)

Circuit Diagram (cont'd)

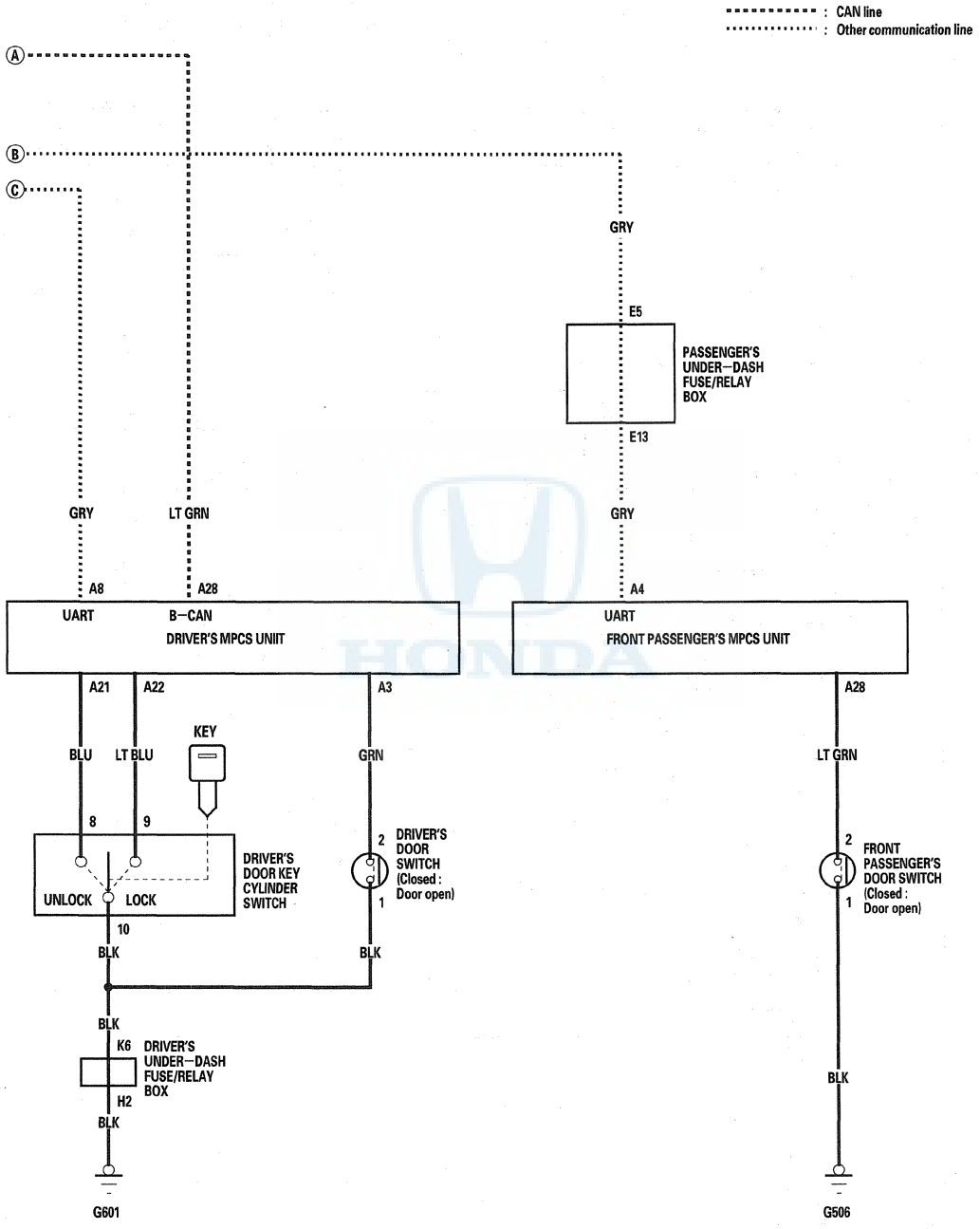

Moonroof Control Unit Input Test

NOTE: If the moonroof works OK manually, but does not work in AUTO, or reverses frequently (pinch detection), reset the moonroof control unit (see page 22-432) before proceeding with the input test.

1. Turn the ignition switch to LOCK (0).
2. Remove the headliner (see page 20-86).
3. Disconnect the 10P connector (A) from the moonroof control unit (B).

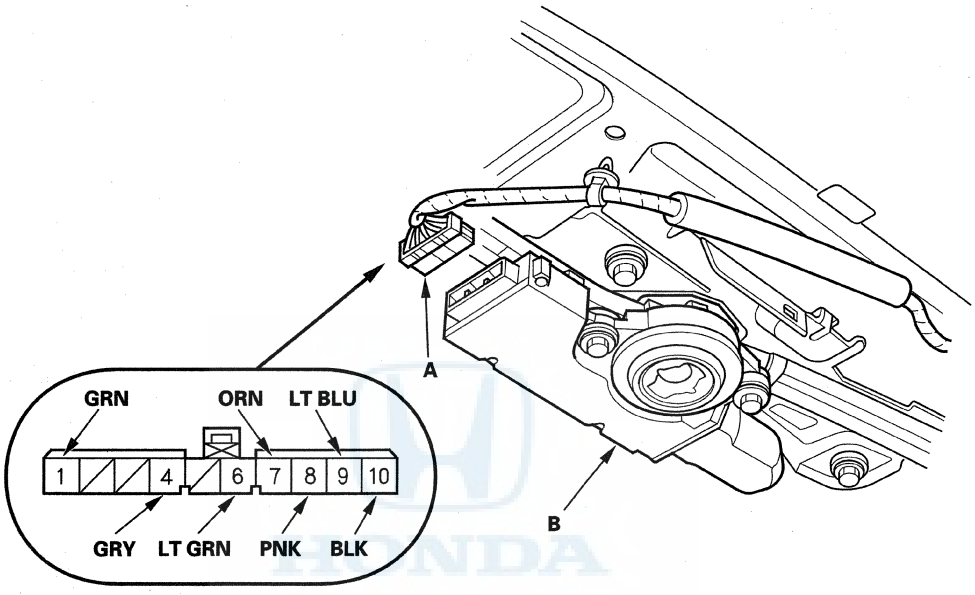

Wire side of female terminals

4. Inspect the connector and socket terminals to be sure they are all making good contact.
   - If the terminals are bent, loose or corroded, repair them as necessary, and recheck the system.
   - If the terminals look OK, go to step 5.

(cont'd)

Moonroof Control Unit Input Test (cont'd)

5. Reconnect the connector to the control unit, and do these input tests at the following connector.

   - If any test indicates a problem, find and correct the cause, then recheck the system.
   - If all the input tests prove OK, go to step 6.

Cavity	Wire	Test condition	Test: Desired result	Possible cause if desired result is not obtained
10	BLK	Under all conditions	Measure the voltage to ground: There should be less then 0.2 V.	• Poor ground (G601) • An open in the wire
1	GRN	Under all conditions	Measure the voltage to ground: There should be battery voltage.	• Blown No. 28 (20 A) fuse in the driver's under-dash fuse/relay box • An open in the wire
6	LT GRN	Moonroof switch in OPEN (AUTO) or CLOSE (AUTO) position	Measure the voltage to ground: There should be battery voltage.	• Blown No. 15 (40 A) fuse in the under-hood fuse/relay box • Blown No. 7 (10 A) fuse in the driver's under-dash fuse/relay box • Faulty moonroof switch • Faulty roof console • An open in the wire
7	ORN	Moonroof switch in TILT position	Measure the voltage to ground: There should be battery voltage.	• Blown No. 15 (40 A) fuse in the under-hood fuse/relay box • Blown No. 7 (10 A) fuse in the driver's under-dash fuse/relay box • Faulty moonroof switch • Faulty roof console • An open in the wire
8	PNK	Moonroof switch in CLOSE position	Measure the voltage to ground: There should be battery voltage.	• Blown No. 15 (40 A) fuse in the under-hood fuse/relay box • Blown No. 7 (10 A) fuse in the driver's under-dash fuse/relay box • Faulty moonroof switch • Faulty roof console • An open in the wire
9	LT BLU	Moonroof switch in OPEN position	Measure the voltage to ground: There should be battery voltage.	• Blown No. 15 (40 A) fuse in the under-hood fuse/relay box • Blown No. 7 (10 A) fuse in the driver's under-dash fuse/relay box • Faulty moonroof switch • Faulty roof console • An open in the wire

6. Disconnect the 10P connector from the control unit, and do these input tests at the following connector.

   - If any test indicates a problem, find and correct the cause, then recheck the system.
   - If all the input tests prove OK, go to step 7.

Cavity	Wire	Test condition	Test: Desired result	Possible cause if desired result is not obtained
4	GRY	Under all conditions	Check for continuity between the terminal No. 4 and driver's MPCS unit connector A (40P) terminal No. 8: There should be continuity.	An open in the wire
		Under all conditions	Check for continuity between the terminal No. 4 and front passenger's MPCS unit connector A (28P) terminal No. 4: There should be continuity.	An open in the wire

7. If all the input tests are OK and multiple failures are found, replace the moonroof motor assembly. If the problem is related to the key-off operation, go to the driver's MPCS unit input test (see page 22-178), and front passenger's MPCS unit input test (see page 22-180).

Moonroof Switch Test/Replacement

1. Remove the roof console (see page 22-307).
2. Remove the HomeLink unit from the top of the roof console (see page 22-307).
3. Remove the four screws from the roof console (A), and remove the rear cover (B).

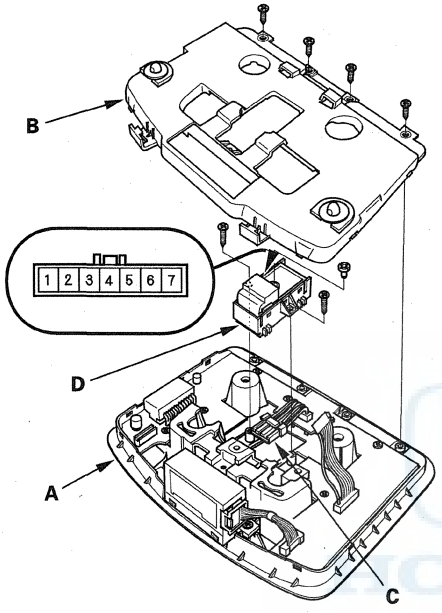

4. Disconnect the 7P connector (C) from the moonroof switch (D), then remove the two screws and switch.
5. Check for continuity between the terminals in each switch position according to the table.

Terminal / Position	1	2	3	6	7	4		5
OPEN	○	—	○			○	○	○
CLOSE	○	—			○	○	○	○
TILT	○	○				○	○	○
CLOSE+AUTO	○	—		○	○	○	○	○
OPEN+AUTO	○	—	○	○		○	○	○

6. If the continuity is not as specified, replace the illumination bulb or the switch.
7. If the switch is OK, but there is a malfunction related to the moonroof switch operation, replace the roof console (see page 22-307).
8. Install the parts in the reverse order of removal.

Accessory Power Sockets

Component Location Index

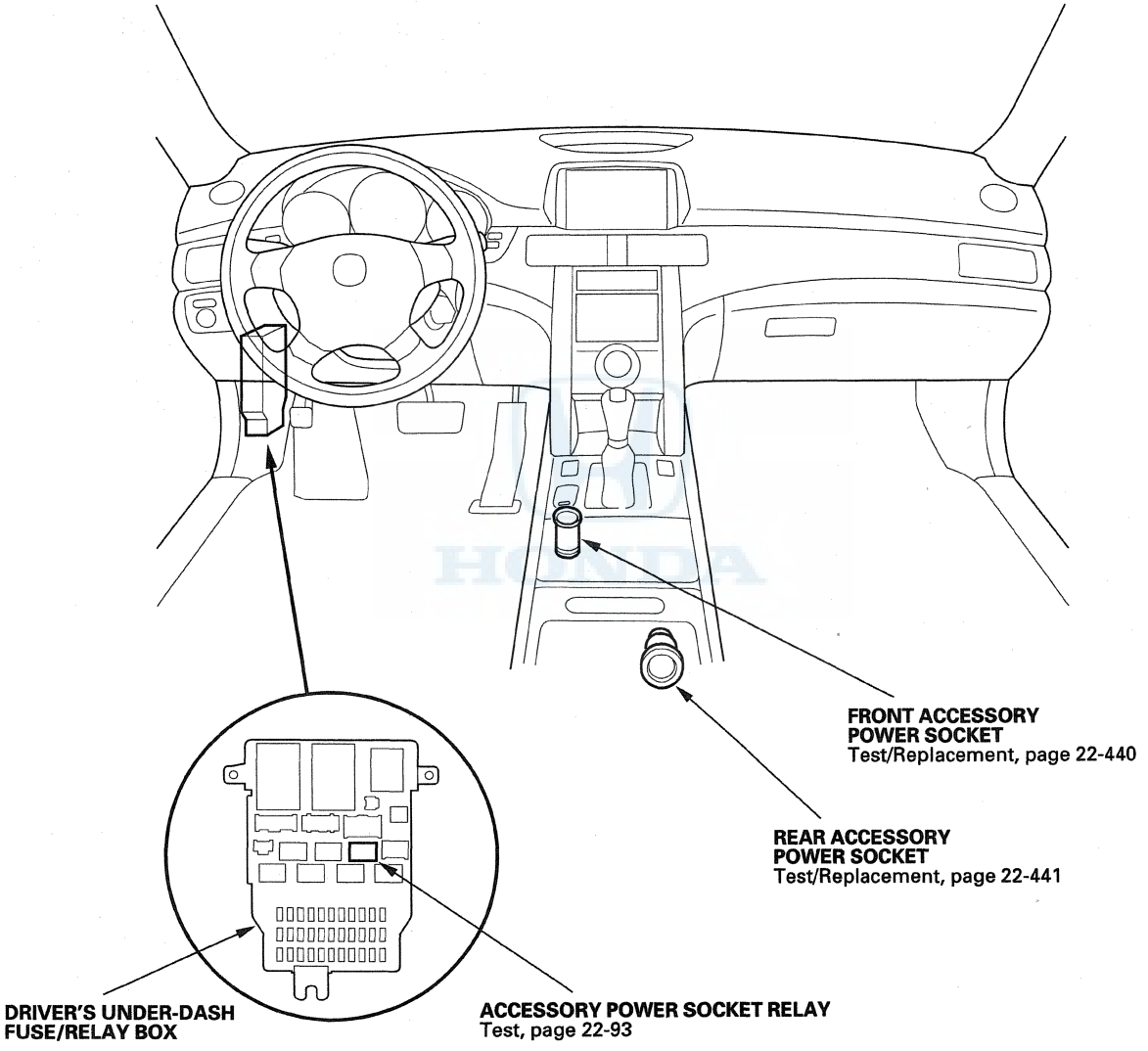

Circuit Diagram

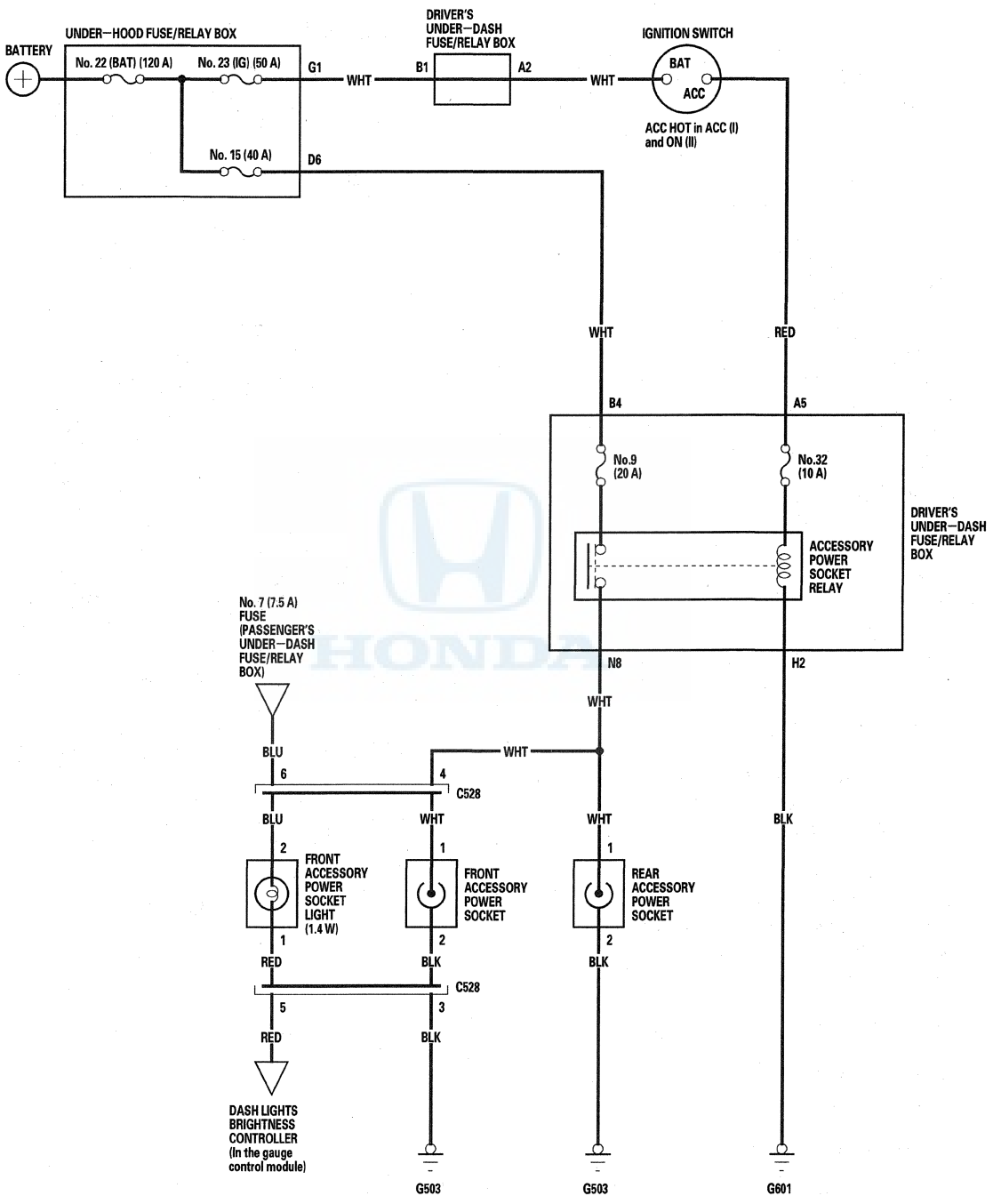

Front Accessory Power Socket Test/Replacement

1. Remove the console panel (see page 20-92), and disconnect the 6P connector (C528) (A).

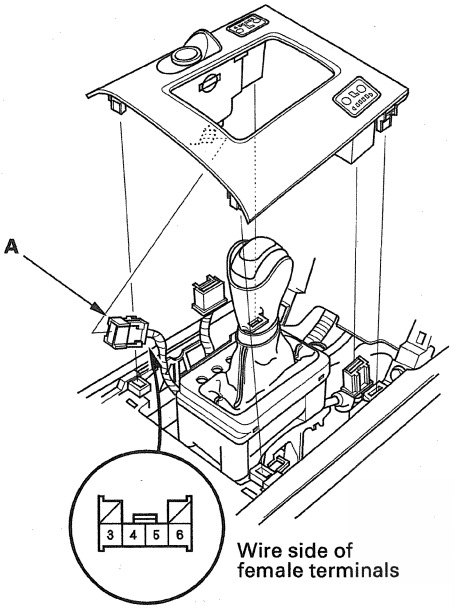

2. Inspect the connector terminals to be sure they are all making good contact.

   - If the terminals are bent, loose, or corroded, repair them as necessary, and recheck the system.
   - If the terminals look OK, go to step 3.

3. Turn the ignition switch to ACC (I), and measure the voltage between terminal No. 4 and body ground. There should be battery voltage.

   - If there is battery voltage, go to step 4.
   - If there is no battery voltage, check for:
     - Blown No. 9 (20 A) or No. 32 (10 A) fuse in the driver's under-dash fuse/relay box.
     - Faulty accessory power socket relay.
     - An open in the WHT wire.
     - Poor ground (G 601).

4. Check for continuity between terminal No. 3 and body ground. There should be continuity.

   - If there is continuity, go to step 5.
   - If there is no continuity, check for:
     - An open in the BLK wire.
     - Poor ground (G 503).

5. Remove the cover (A) and disconnect the 2P connector (B) from the front accessory power socket.

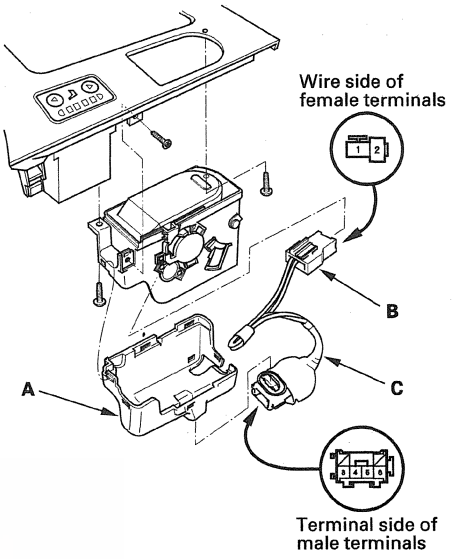

6. Check for continuity between accessory power socket subharness (C) 6P connector (C528) terminal No. 4 and accessory power socket 2P connector terminal No. 1, and the 6P connector (C528) terminal No. 3 and accessory power socket 2P connector terminal No. 2. If the harness is OK, go to step 7.

7. Replace the front accessory power socket (A).

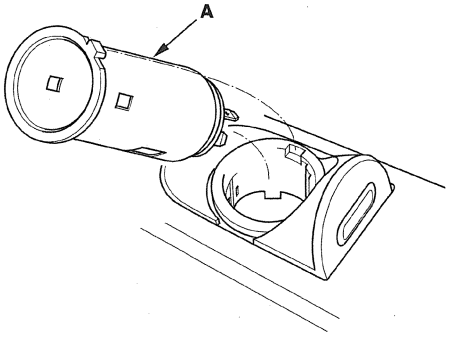

8. Install the parts in the reverse order of removal.

Rear Accessory Power Socket Test/Replacement

1. Open the center console.
2. Remove the screws and accessory trim (A).

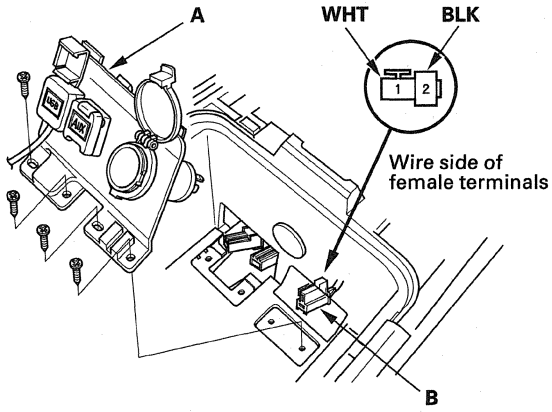

3. Inspect the 2P connector (B) terminals to be sure they are all making good contact.
   - If the terminals are bent, loose, or corroded, repair them as necessary, and recheck the system.
   - If the terminals look OK, go to step 4.
4. Turn the ignition switch to ACC (I), and measure the voltage between terminal No. 1 and body ground. There should be battery voltage.
   - If there is battery voltage, go to step 5.
   - If there is no battery voltage, check for:
     – Blown No. 9 (20 A) or No. 32 (10 A) fuse in the driver's under-dash fuse/relay box.
     – Faulty accessory power socket relay.
     – Poor ground (G 503, G601).
     – An open in the wire.
5. Check for continuity between terminal No. 2 and body ground. There should be continuity.
   - If there is continuity, go to step 6.
   - If there is no continuity, check for:
     – Poor ground (G 503).
     – An open in the wire.
6. Remove the socket (A).

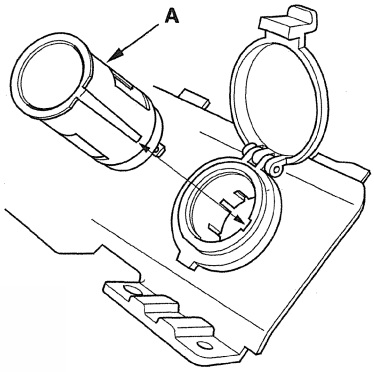

7. Remove the housing (A) from the accessory trim (B).

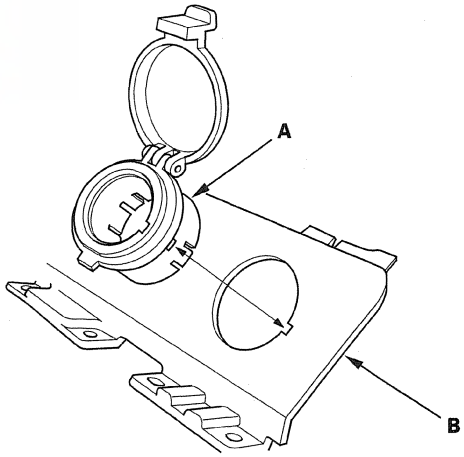

8. Install the power socket in the reverse order of removal.

Automatic Dimming Inside Mirror

Circuit Diagram

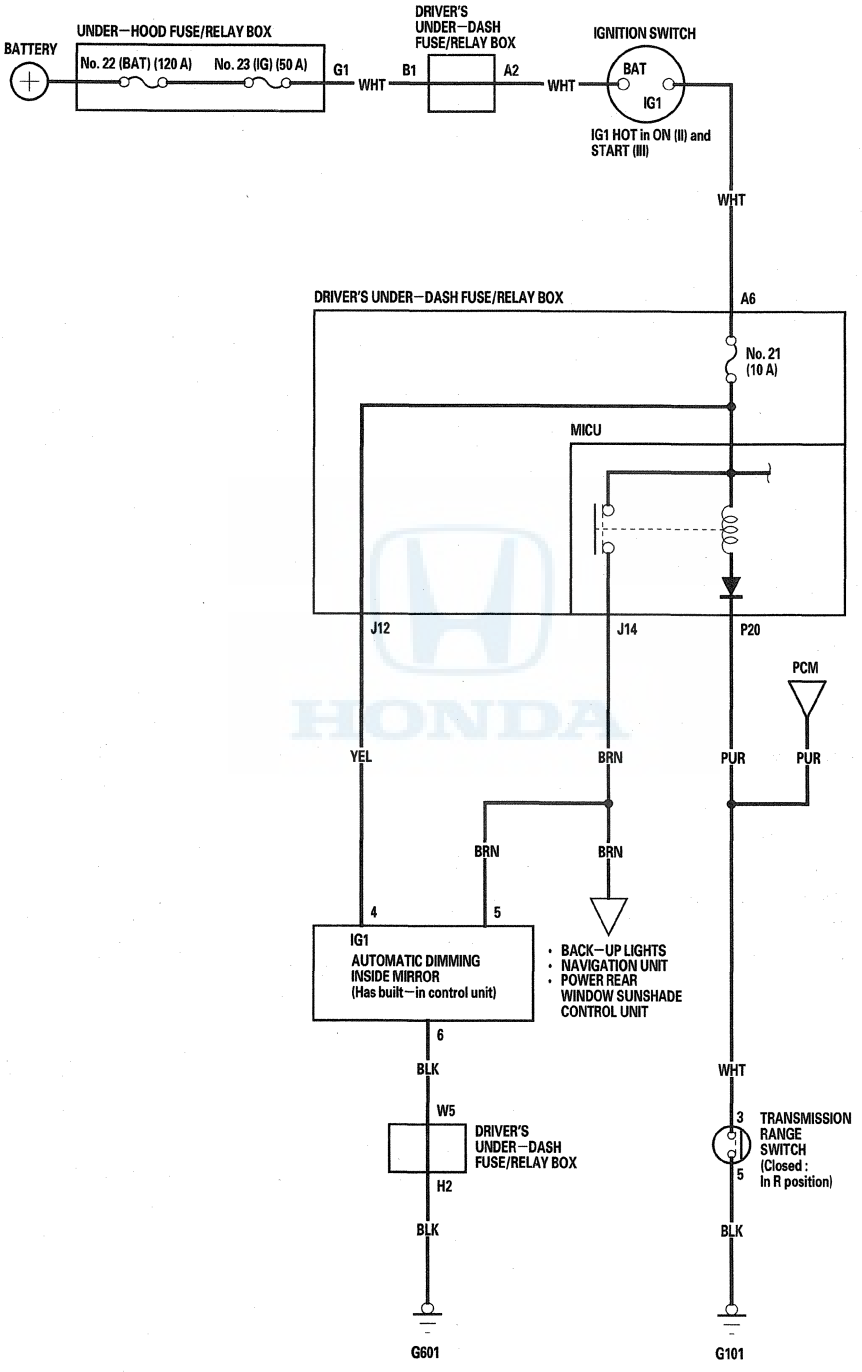

System Description

The automatic dimming inside mirror has a front-facing lux level sensor (A), a rear-facing lux level sensor (B), and a control unit. The control unit receives signals from each sensor. Based on the difference between the two lux levels (the light outside the vehicle and the light from the headlights of the other vehicle, etc.), the control unit controls the electro-chromic gel to reduce the glare. This dimming function is canceled when the transmission is in reverse, or when the automatic dimming off switch (C) is turned OFF.

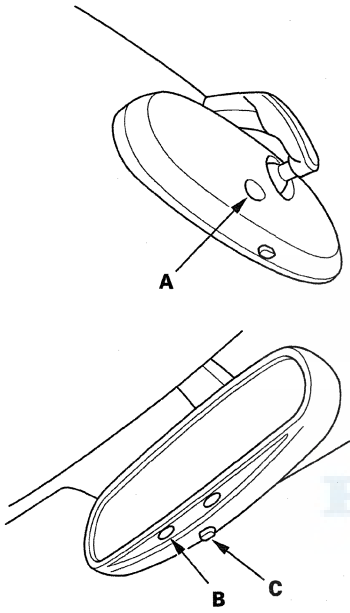

Test/Replacement

1. Remove the roof console front cover.
2. Disconnect the 6P connector (A) from the automatic dimming inside mirror (B).

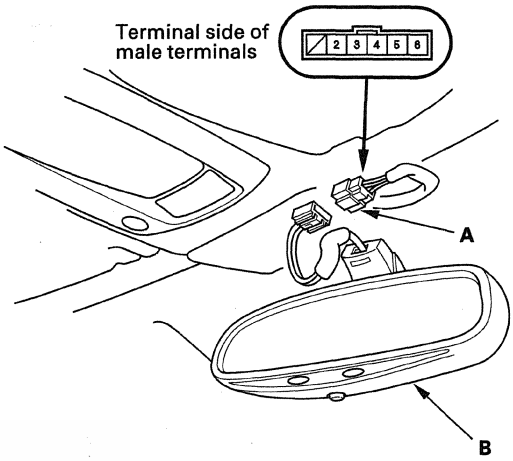

3. Check for continuity between terminal No. 6 and body ground.
   - If there is continuity, go to step 4.
   - If there is no continuity, check for:
     – An open in the wire.
     – Poor ground (G 601).
4. Measure the voltage between terminal No. 4 and body ground with the ignition switch turned to ON (II).
   - If there is battery voltage, go to step 5.
   - If there is no voltage, check for:
     – Blown No. 21 (10 A) fuse in the driver's under-dash fuse/relay box.
     – An open in the wire.
5. Measure the voltage between terminal No. 5 and body ground with the ignition switch turned to ON (II) and the transmission range switch in R position.
   - If there is battery voltage, replace the mirror assembly.
   - If there is no voltage, check for:
     – An open in the wire.
     – Faulty driver's under-dash fuse/relay box.
     – Faulty transmission range switch.
     – Poor ground (G 101).

Seat Belt Tension Reducer

Circuit Diagram

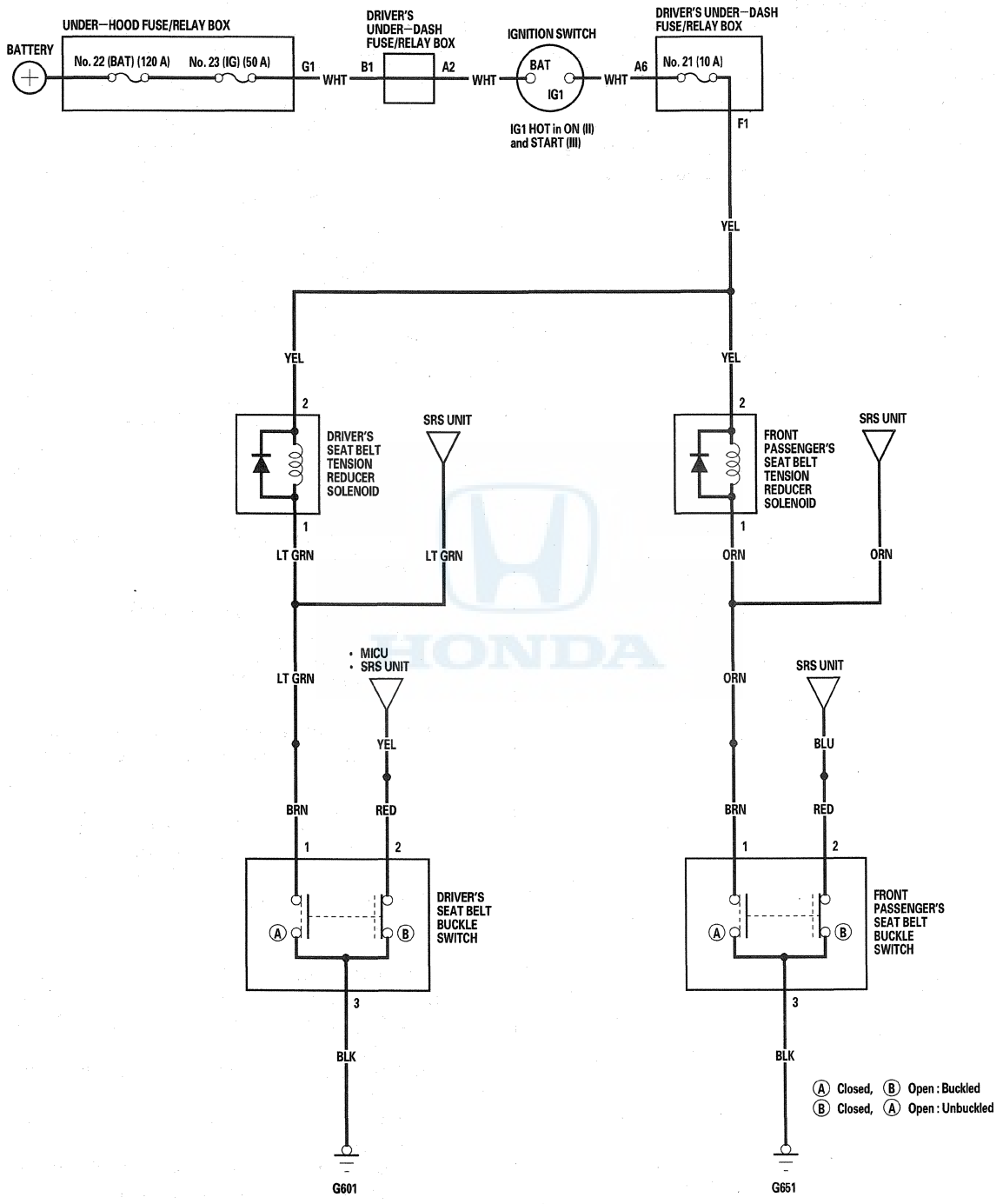

Test

1. Remove the B-pillar lower trim (see page 20-72).

2. Disconnect the 2P connector (A) from the seat belt tension reducer (B).

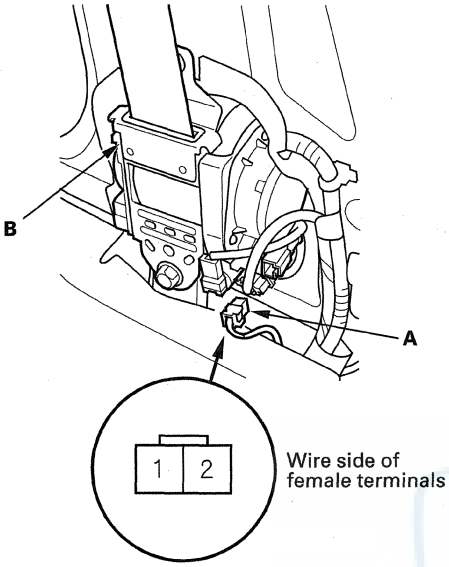

3. Measure the voltage between terminal No. 2 (+) and body ground with the ignition switch turned to ON (II). There should be battery voltage.

   - If there is no voltage, check for:
     – A blown No. 21 (10 A) fuse in the driver's under-dash fuse/relay box.
     – An open in the YEL wire.
   - If there is battery voltage, go to step 4.

4. Turn the ignition switch to LOCK (0) and reconnect the 2P connector to the seat belt tension reducer.

5. Measure the voltage between terminal No. 1 and body ground with the ignition switch turned to ON (II) and the seat belt unbuckled.
   There should be battery voltage.

   - If there is no voltage, check for a faulty seat belt switch, short to body ground on the LT GRN (or ORN)* wire, or replace the seat belt tension reducer.
   - If there is battery voltage, go to step 6.

   *: Front passenger's

6. Turn the ignition switch to LOCK (0).

7. Disconnect the 2P connector from the seat belt tension reducer.

8. Check for continuity between terminal No. 1 and body ground with the seat belt buckled.
   There should be continuity.

   - If there is no continuity, check for:
     – Poor ground (G 601, G651*).
     – An open in the wire.
     – Faulty seat belt buckle switch.

   *: Front passenger's

Trunk Lid Opener

Component Location Index

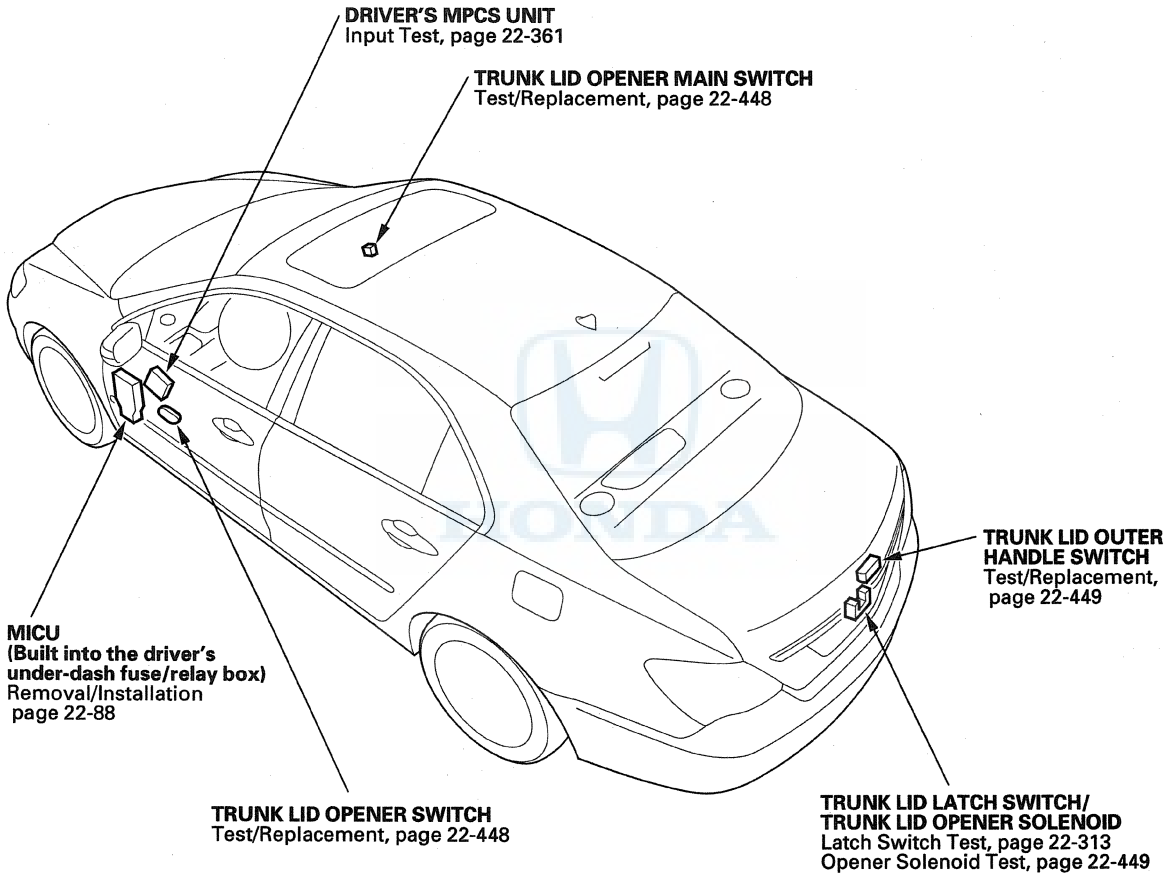

Circuit Diagram

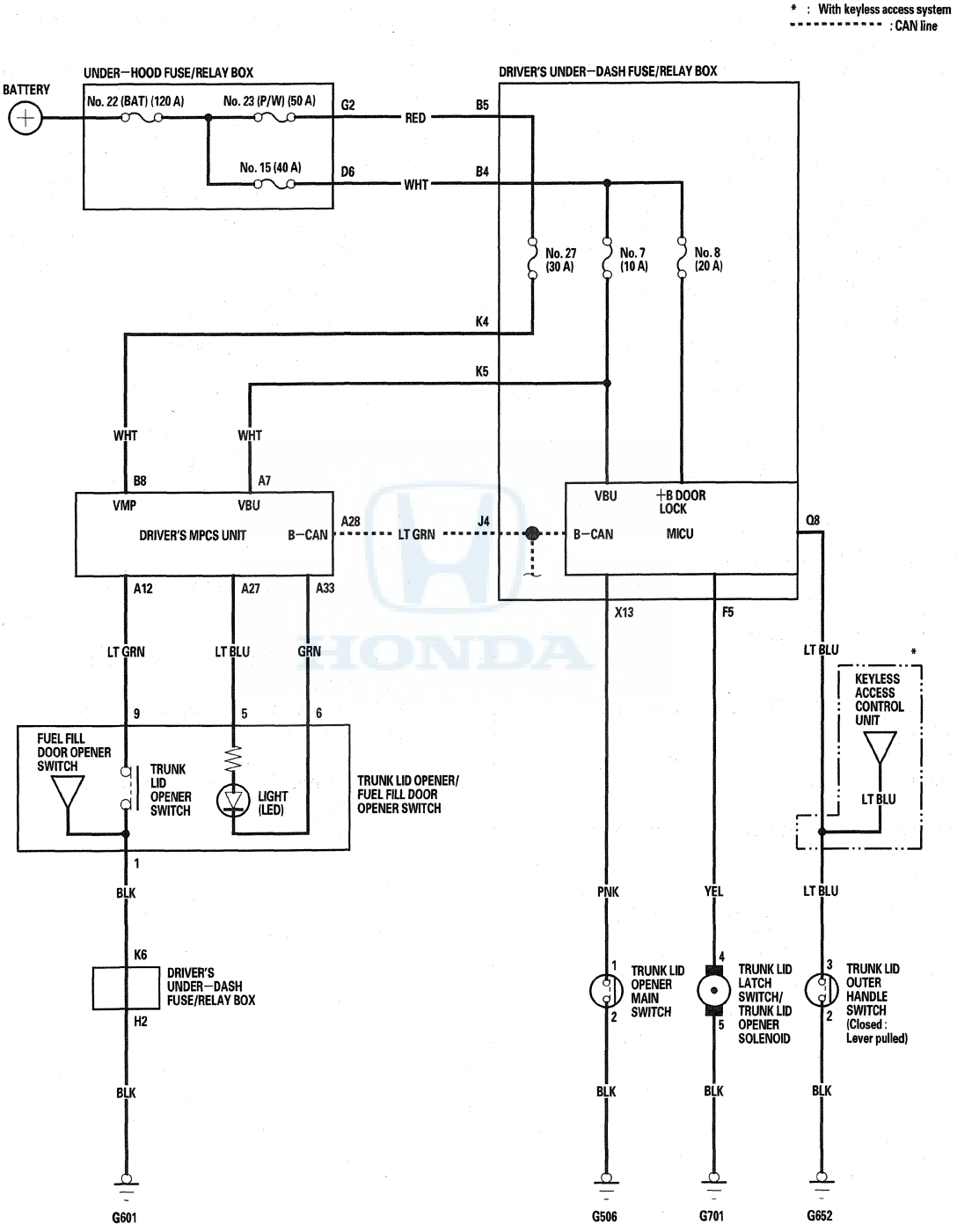

Trunk Lid Opener

Trunk Lid Opener Main Switch Test /Replacement

1. Remove the glove box housing (see page 20-103).
2. Carefully push the main switch (A) out from behind the glove box housing.

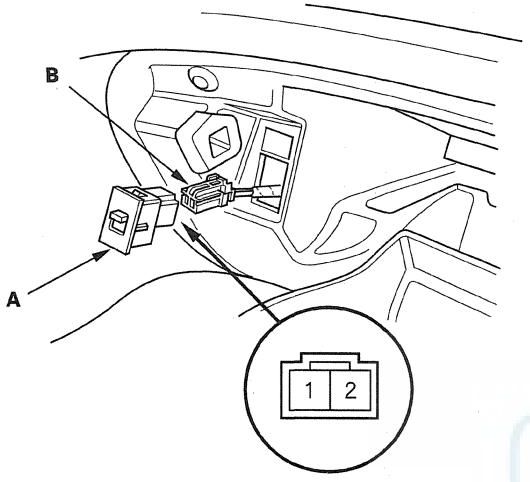

3. Disconnect the 2P connector (B) from the main switch.
4. Check for continuity between terminals No. 1 and No. 2.
   - With the main switch ON, there should be continuity.
   - With the main switch OFF, there should be no continuity.
5. If the continuity is not as specified, replace the main switch.

Trunk Lid Opener Switch Test/ Replacement

1. Remove the driver's door panel (see page 20-9).
2. Disconnect the 10P connector (A) from the switch (B).

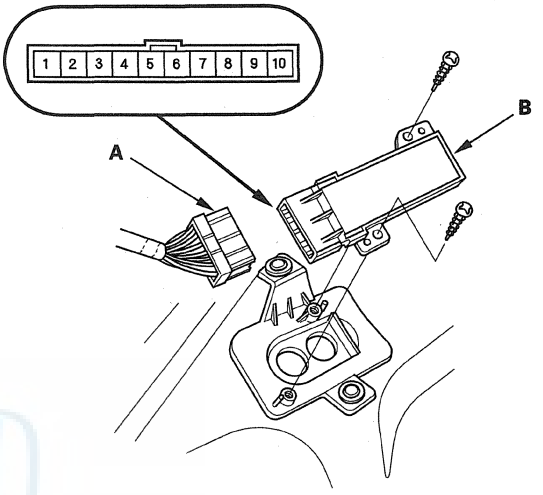

3. Check for continuity between terminals No. 1 and No. 9.
   - With the switch pushed, there should be continuity.
   - With the switch released, there should be no continuity.
4. If the continuity is not as specified, remove the two screws and replace the switch.

Trunk Lid Opener Solenoid Test

1. Remove the trunk rear trim panel (see page 20-83).
2. Disconnect the 5P connector (A) from the trunk lid latch switch/trunk lid opener solenoid (B).

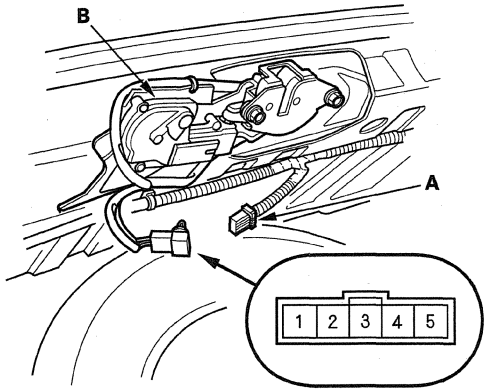

3. Check solenoid operation by connecting power to the terminal No. 4 and ground the terminal No. 5 momentarily.

   NOTE: To prevent damage to the solenoid, apply battery voltage momentarily.

4. If the solenoid does not actuate, replace it.

Trunk Lid Outer Handle Switch Test /Replacement

1. Open the trunk lid, and remove the trunk lid trim (see page 20-85).
2. Disconnect the 3P connector (A) from the trunk lid outer handle switch (B).

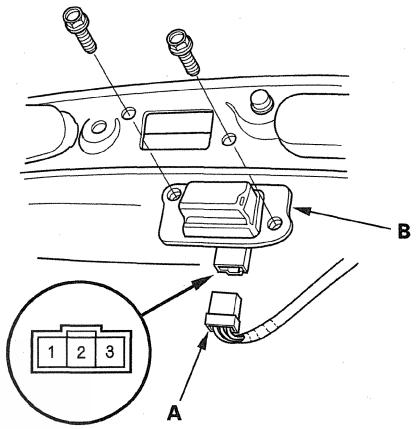

3. Check for continuity between terminals No. 2 and No. 3.

   - With the handle pulled, there should be continuity.
   - With the handle released, there should be no continuity.

4. If the continuity is not as specified, remove the two bolts and replace the switch.

Fuel Fill Door Opener

Component Location Index

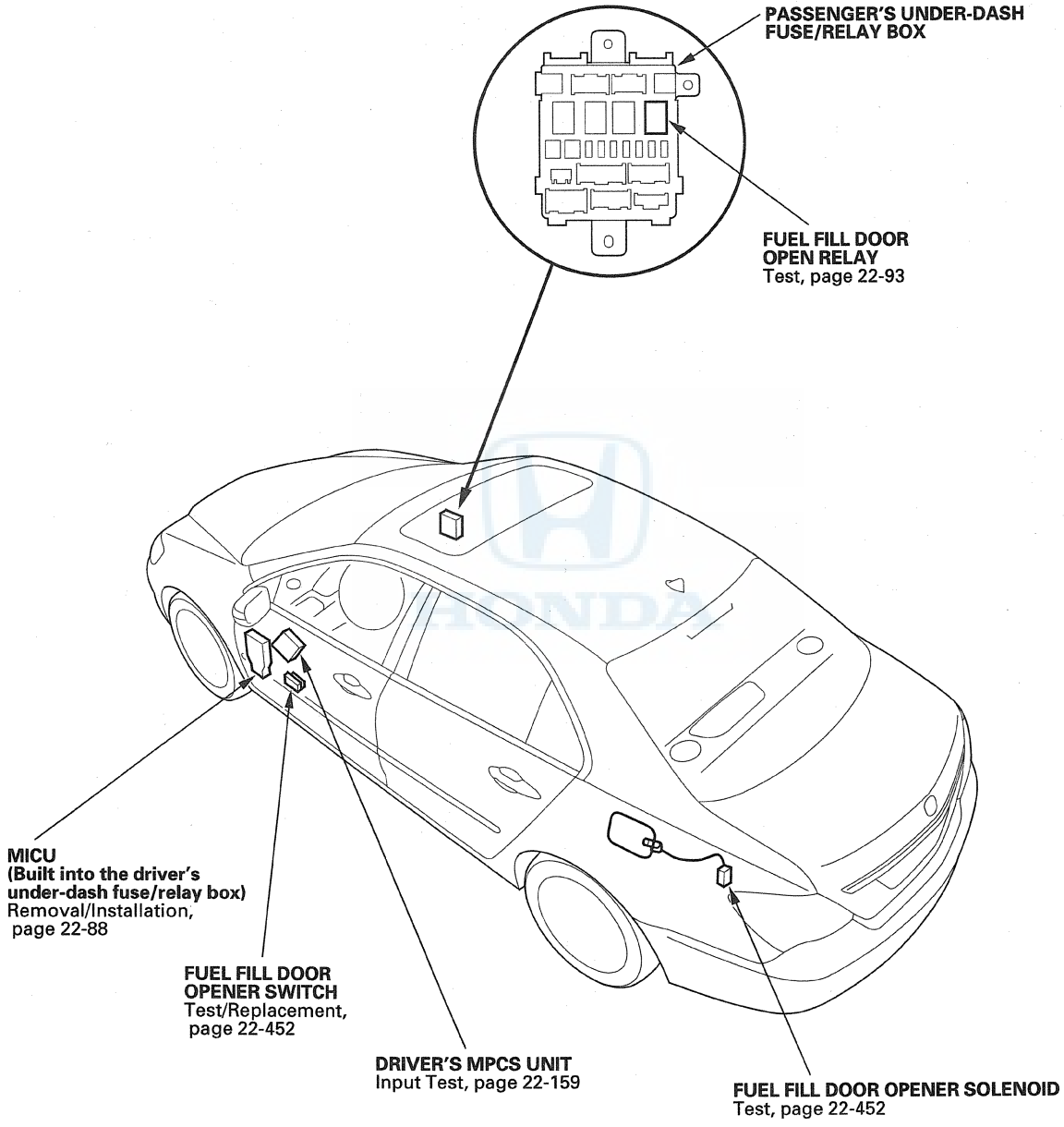

Circuit Diagram

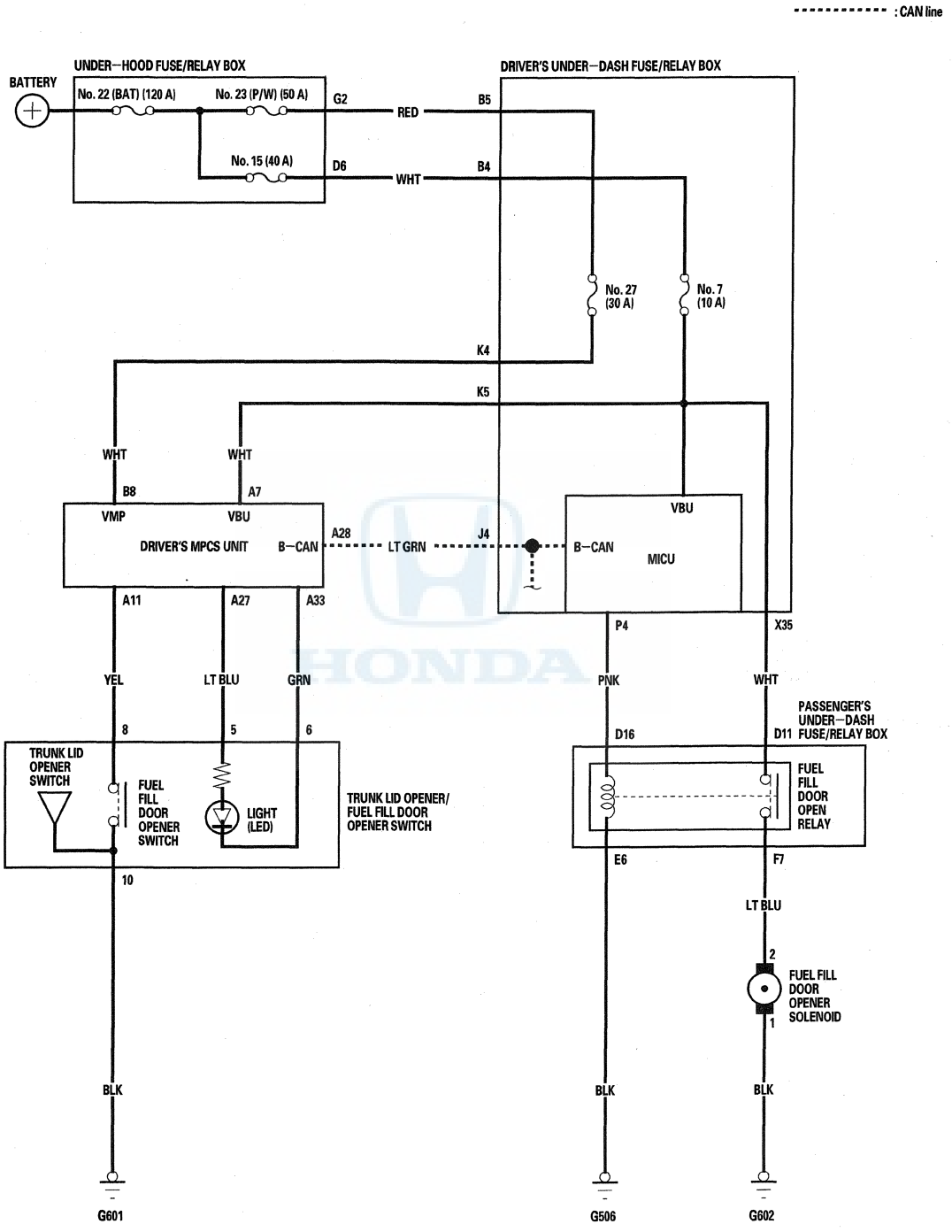

Fuel Fill Door Opener

Fuel Fill Door Opener Solenoid Test

1. Open the trunk lid, and remove the left trunk side trim panel (see page 20-83).
2. Disconnect the 2P connector (A) from the fuel fill door opener solenoid (B).

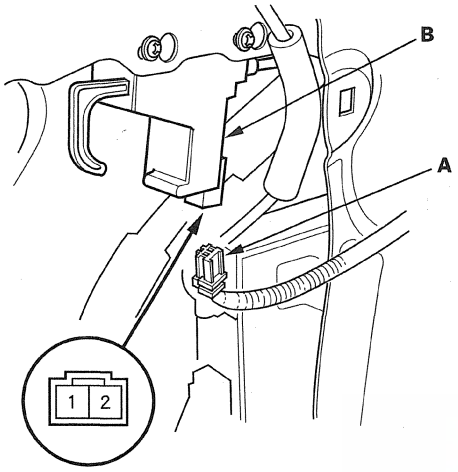

3. Check solenoid operation by connecting power to the terminal No. 2 and ground the terminal No. 1 momentarily.

   NOTE: To prevent damage to the solenoid, apply battery voltage momentarily.

4. If the solenoid does not actuate, replace it.

Fuel Fill Door Opener Switch Test/ Replacement

1. Remove the driver's door panel (see page 20-9).
2. Disconnect the 10P connector (A) from the fuel fill door opener switch (B).

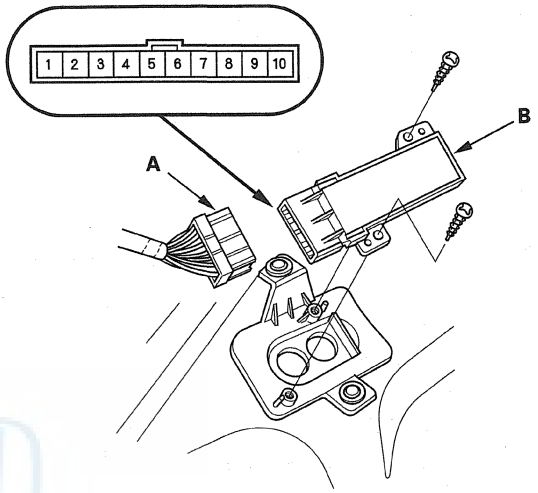

3. Check for continuity between terminals No. 8 and No. 10.
   - With the switch pushed, there should be continuity.
   - With the switch released, there should be no continuity.
4. If the continuity is not as specified, remove the two screws and replace the switch.

Power Mirrors

Component Location Index

For the power mirror circuit diagram, refer to the Driving Position Memory System (DPMS) Circuit Diagram, page 22-516

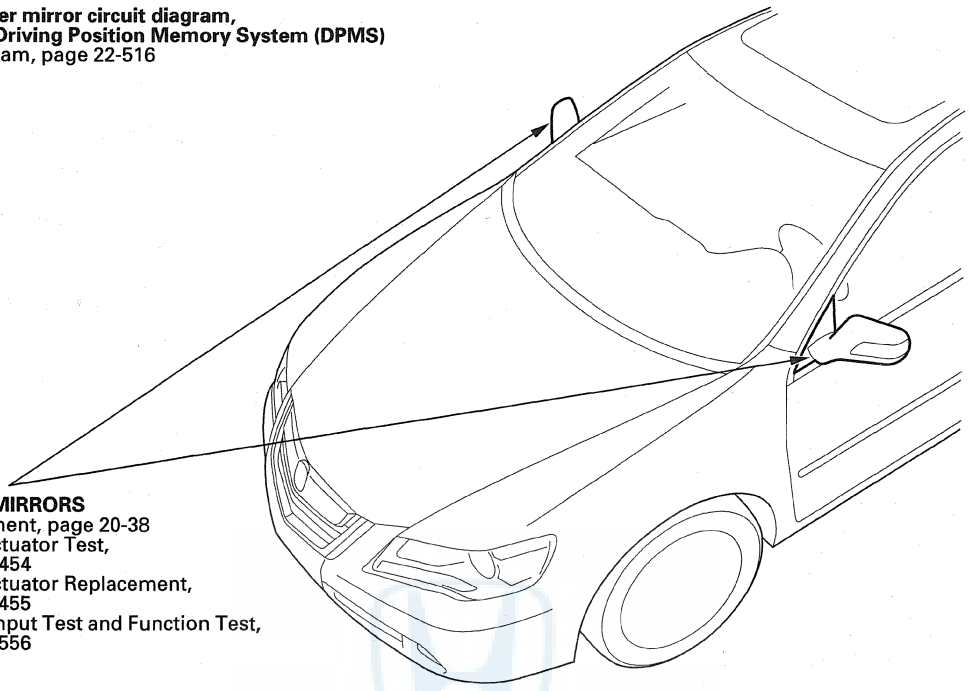

POWER MIRRORS
Replacement, page 20-38
Mirror Actuator Test, page 22-454
Mirror Actuator Replacement, page 22-455
System Input Test and Function Test, page 22-556

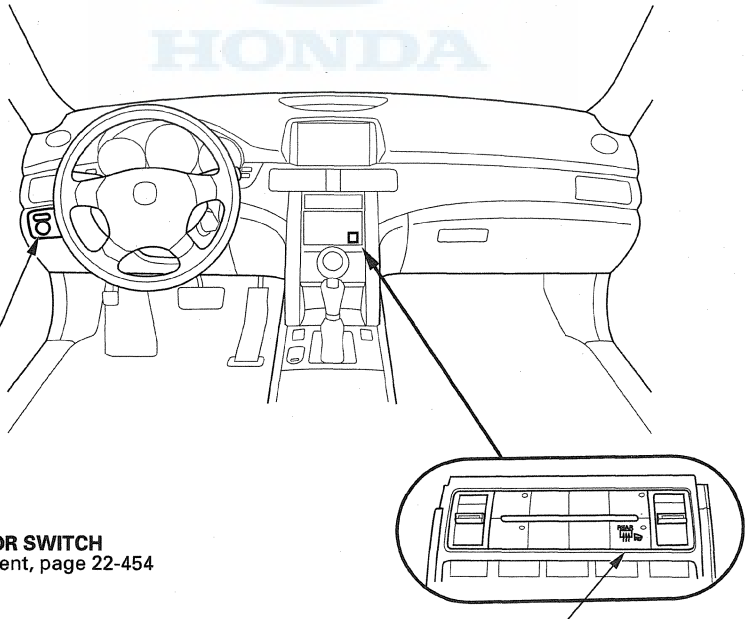

POWER MIRROR SWITCH
Test/Replacement, page 22-454

REAR WINDOW DEFOGGER/ POWER MIRROR DEFOGGER SWITCH (Built into the climate control unit)

Power Mirror Switch Test/ Replacement

1. Carefully pry the switch panel out from the dashboard.
2. Disconnect the 10P connector (A) from the power mirror switch (B).

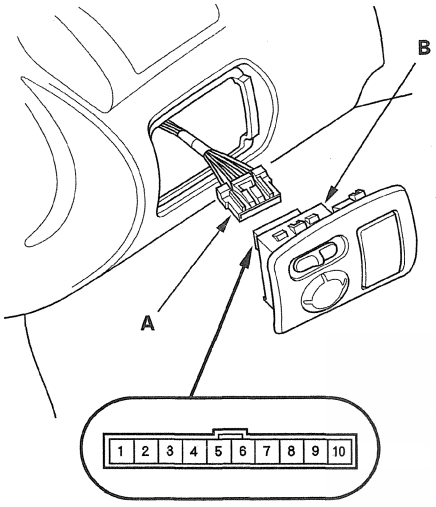

3. Check for continuity between the terminals in each switch position according to the table.

Mirror Switch:

Terminal / Position	1	2	3	4	7	8	9	10
UP					○			○
DOWN				○				○
LEFT						○		○
RIGHT			○					○
L		○						○
R	○							○

4. If the continuity is not as specified, replace the power mirror switch.

Power Mirror Actuator Test

NOTE: The power mirror actuator can be tested by using the HDS and following these steps:

- Select BODY ELECTRICAL from the system select menu.
- Select FUNCTION TEST, and then the appropriate power mirror function test.

1. Remove the front door sash inner trim (see page 20-18), and the door panel (see page 20-9).
2. Disconnect the 16P connector (A) from the power mirror actuator (B).

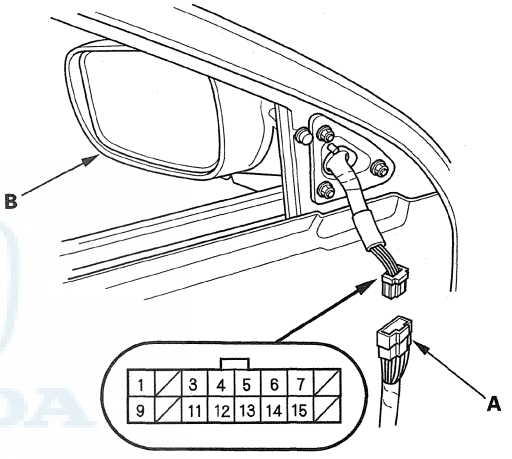

Wire side of female terminals

3. Check actuator operation by connecting power and ground according to the table.

Terminal / Position	5	6	7
TILT UP		⊖	⊕
TILT DOWN		⊕	⊖
SWING LEFT	⊖	⊕	
SWING RIGHT	⊕	⊖	

4. If the mirror fails to work properly, replace the mirror actuator.

Defogger Test

5. Measure the resistance between terminals No. 15 and No. 14 of the 16P connector. There should be about 8 Ω or less.
   - If the resistance is not as specified, check for an open circuit.
   - If there is no open circuit and the harness is OK, replace the mirror holder (see page 22-455).

Power Mirror Actuator Replacement

Actuator Replacement

1. Remove the mirror holder (see page 20-38).
2. Remove the three mounting screws from the power mirror actuator (A), then pull the actuator, out slightly.

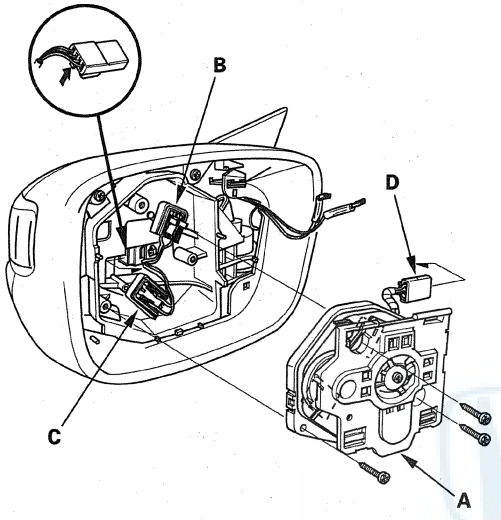

3. Disconnect the gray connector (B) and the black connector (C) from the actuator, then disconnect the position sensor 4P connector (D).
4. Install a new actuator in the reverse order of removal.
5. Operate the power mirror to ensure smooth operation.

Actuator Harness Replacement

1. Remove the front door sash inner trim (see page 20-18), and door panel (see page 20-19).
2. Remove the mirror holder (see page 20-38), then remove the power mirror from the door (see page 20-38).
3. Remove the three mounting screws from the power mirror actuator (A), then pull the actuator, out slightly.

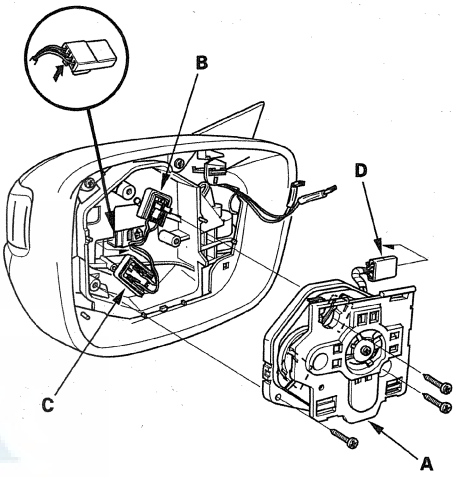

4. Disconnect the gray connector (B) and the black connector (C) from the actuator, then disconnect the position sensor 4P connector (D).
5. Record the power mirror 16P connector terminal locations and wire colors.
6. Disassemble the power mirror 16P connector (A), and remove all the terminals from it.

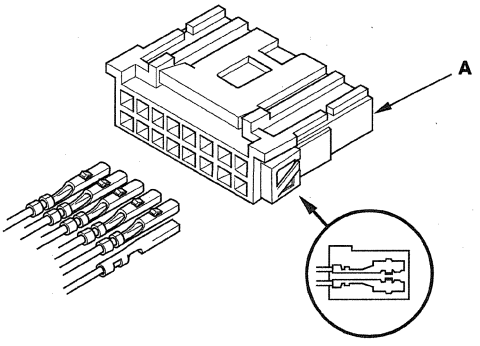

(cont'd)

Power Mirror Actuator Replacement (cont'd)

7. Remove the gasket (A), and remove the screw and clamp (B).

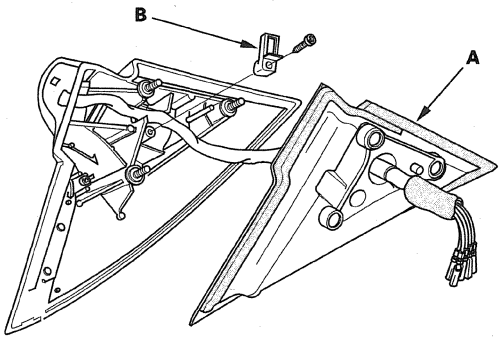

8. Remove the lower cover (A).

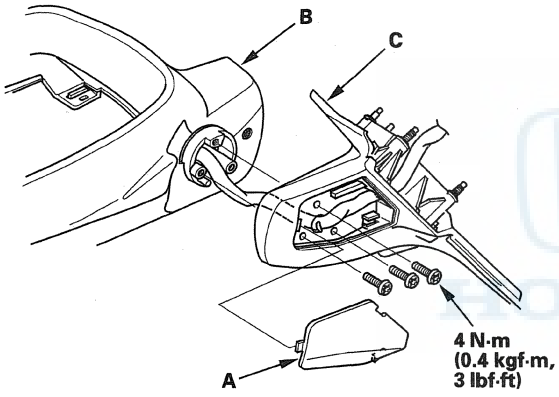

9. Remove the three TORX screws, and separate the mirror housing (B) from the bracket (C).

10. Disassemble the mirror housing by removing the four screws, then disconnect the 2P connector (A) from the side turn signal light (B).

NOTE: Remove the screw (C) first.

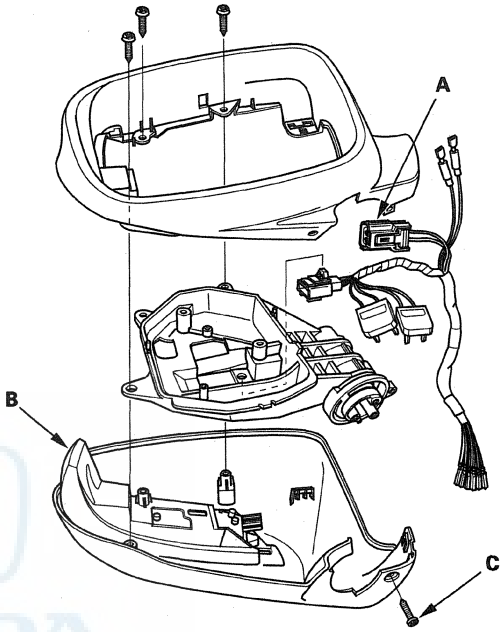

11. Route a new wire harness through the hole in the bracket and the gasket in the reverse order of removal.

12. Connect the connectors to the actuator and the side turn signal light securely.

13. Install the actuator, housing, and the bracket in the reverse order of removal.

14. Insert the new harness terminals into the 16P connector in the original arrangement.

POWER MIRROR 16P CONNECTOR

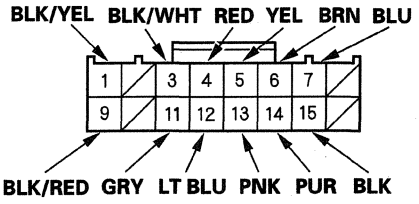

Wire side of female terminals

15. Apply tape to seal the intersection of the wire harness and the gasket.

16. Install the power mirror on the door, and make sure the actuator, mirror defogger, and side turn signal light operation.

Seat Heaters

Component Location Index

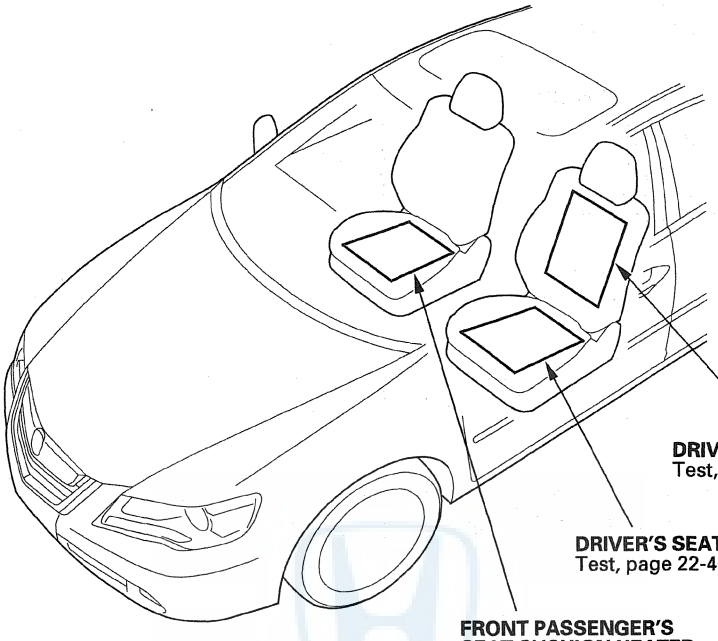

DRIVER'S SEAT-BACK HEATER
Test, page 22-462

DRIVER'S SEAT CUSHION HEATER
Test, page 22-462

FRONT PASSENGER'S SEAT CUSHION HEATER
Test, page 22-462

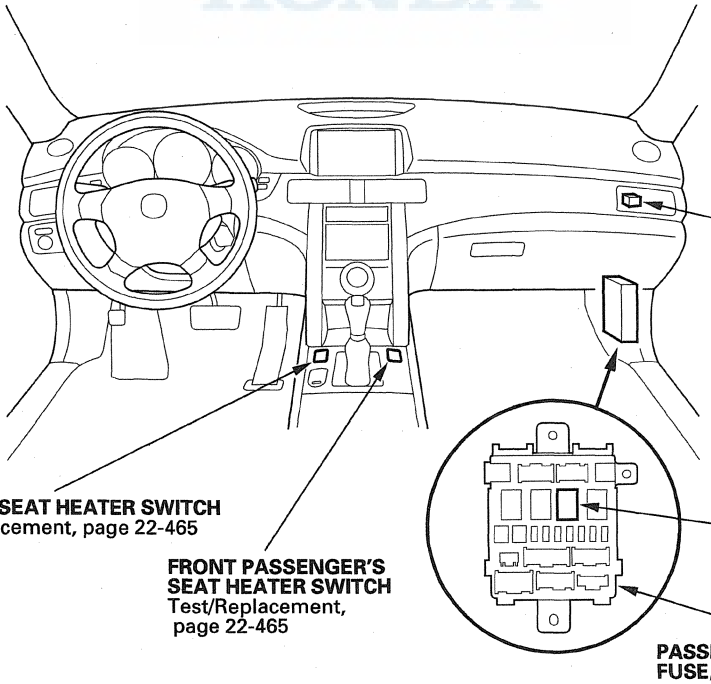

REAR SEAT HEATER RELAY
Test, page 22-93

DRIVER'S SEAT HEATER SWITCH
Test/Replacement, page 22-465

FRONT PASSENGER'S SEAT HEATER SWITCH
Test/Replacement, page 22-465

FRONT SEAT HEATER RELAY
Test, page 22-93

PASSENGER'S UNDER-DASH FUSE/RELAY BOX

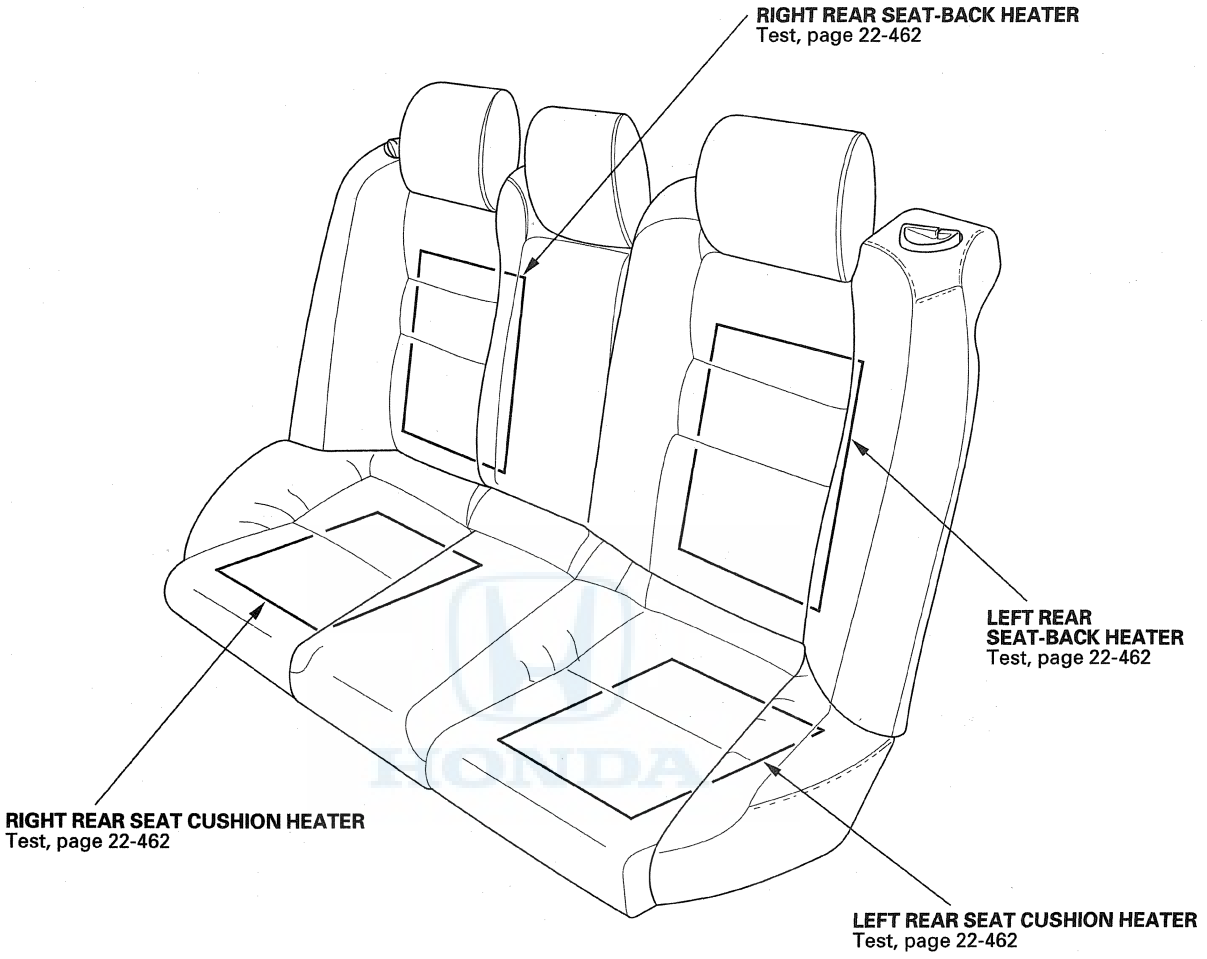
RIGHT REAR SEAT-BACK HEATER
Test, page 22-462
LEFT REAR
SEAT-BACK HEATER
Test, page 22-462
RIGHT REAR SEAT CUSHION HEATER
Test, page 22-462
LEFT REAR SEAT CUSHION HEATER
Test, page 22-462

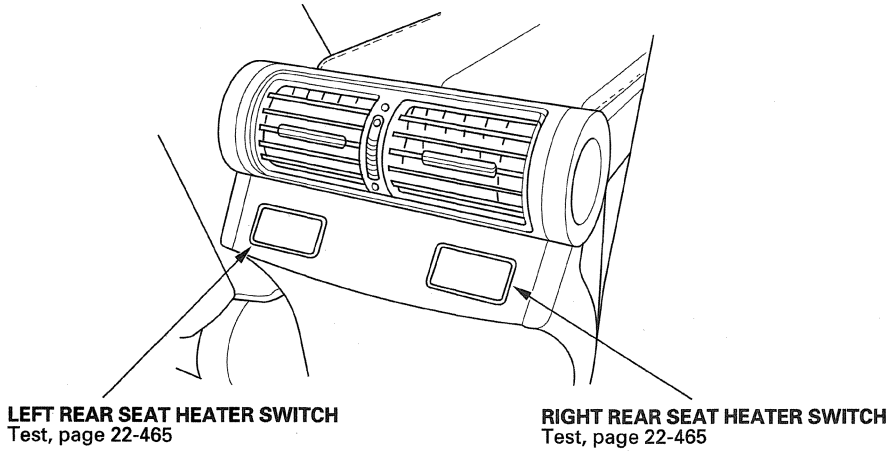
LEFT REAR SEAT HEATER SWITCH
Test, page 22-465
RIGHT REAR SEAT HEATER SWITCH
Test, page 22-465

Seat Heaters

Circuit Diagram - Front Seats

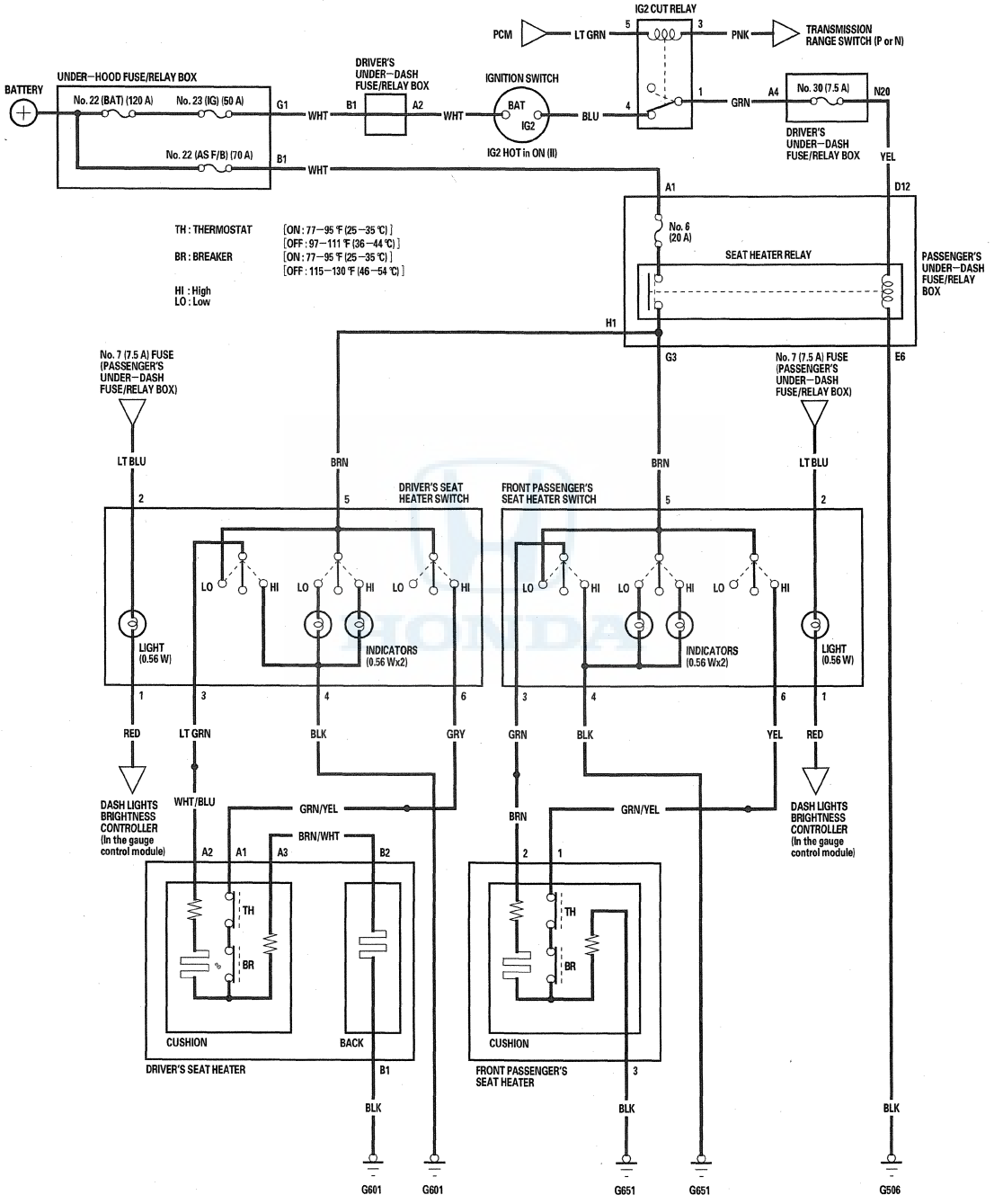

Circuit Diagram - Rear Seat

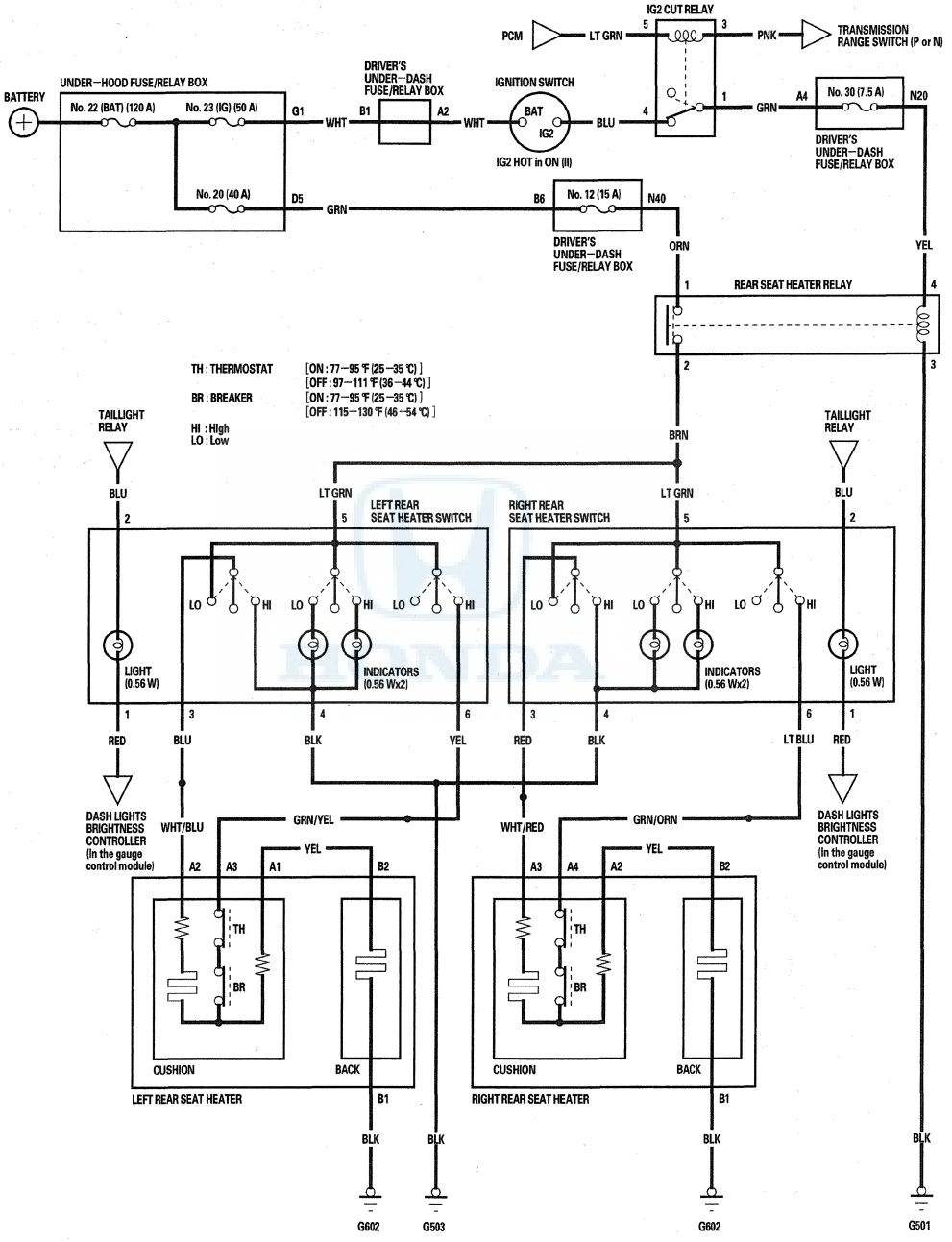

Seat Heater Test

Driver's Seat

1. Remove the driver's seat (see page 20-114), then remove the seat-back cover (see page 20-128).

2. Disconnect the 4P connector (A) from the seat cushion heater and 2P connector (B) from the seat-back heater.

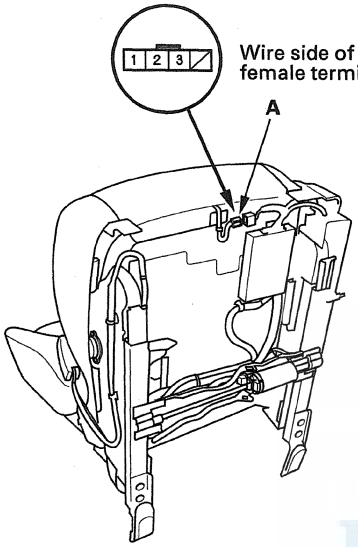

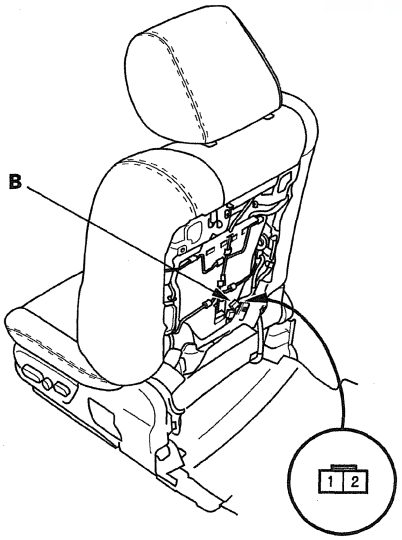

Wire side of female terminals

Seat Cushion Heater Test

3. Check for continuity between seat cushion heater 4P connector terminals No. 1 and No. 2, and terminals No. 2 and No. 3. There should be continuity. If there is no continuity, replace the seat cushion heater.

Seat-back Heater Test

4. Check for continuity between seat-back heater 2P connector terminals No. 1 and No. 2. There should be continuity. If there is no continuity, replace the seat-back heater.

5. Reconnect the 4P and 2P connectors to the seat heaters, and check for continuity between seat cushion heater 4P connector terminal No. 3 and the seat-back heater 2P connector terminal No. 2. There should be continuity. If there is no continuity, repair an open in the wire between the seat cushion heater and the seat-back heater.

Front Passenger's Seat

1. Remove the front passenger's seat (see page 20-114).

2. Disconnect the 3P connector (A) from the seat cushion heater.

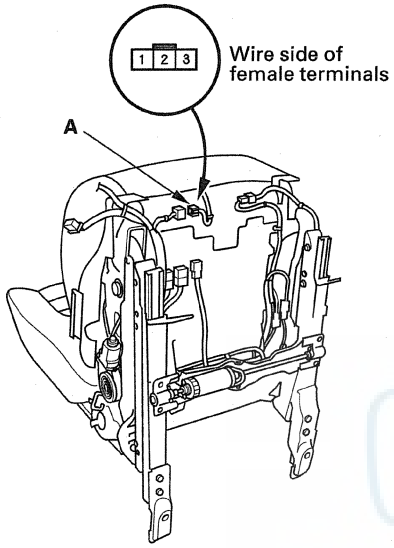

3. Check for continuity between seat cushion heater 3P connector terminals No. 1 and No. 3, and terminals No. 2 and No. 3. There should be continuity. If there is no continuity, replace the seat cushion heater.

Rear Seat (Canada models only)

1. Remove the rear seat cushion and the rear seat-back (see page 20-140).

2. Disconnect the 3P [4P] connector (A) from the left [right] seat cushion heater, and 2P connector (B) from the seat-back heaters.
[ ] : Right seat

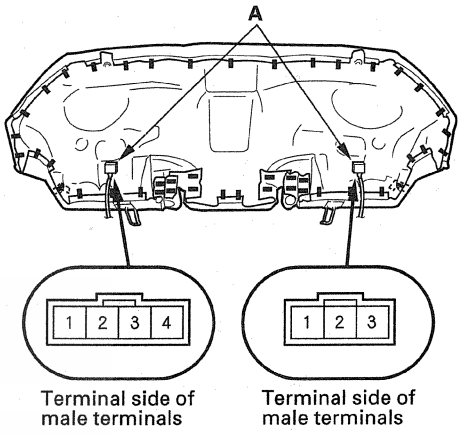

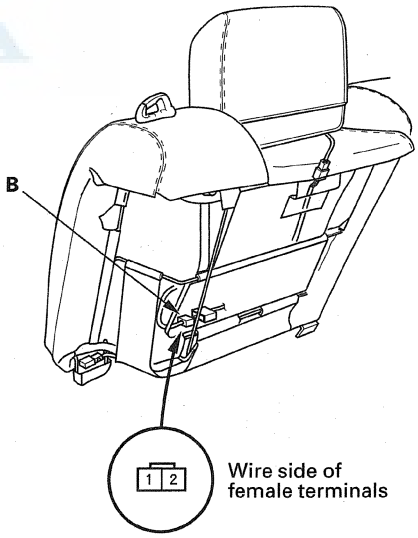

(cont'd)

Seat Heater Test (cont'd)

Left Rear Seat Cushion Heater Test

3. Check for continuity between seat cushion heater 3P connector terminals No. 1 and No. 2, and terminals No. 2 and No. 3. There should be continuity. If there is no continuity, replace the seat cushion heater.

Left Rear Seat-back Heater Test

4. Check for continuity between seat-back heater 2P connector terminals No. 1 and No. 2. There should be continuity. If there is no continuity, replace the seat-back heater.

5. Reconnect the 3P and 2P connectors to the seat heaters, and check for continuity between seat cushion heater 3P connector terminal No. 1 and seat-back heater 2P connector terminal No. 2. There should be continuity. If there is no continuity, repair an open in the wire between the seat cushion heater and the seat-back heater.

Right Rear Seat Cushion Heater Test

6. Check for continuity between seat cushion heater 4P connector terminals No. 2 and No. 3, and terminals No. 3 and No. 4. There should be continuity. If there is no continuity, replace the seat cushion heater.

Right Rear Seat-back Heater Test

7. Check for continuity between seat-back heater 2P connector terminals No. 1 and No. 2. There should be continuity. If there is no continuity, replace the seat-back heater.

8. Reconnect the 3P and 2P connectors to the seat heaters, and check for continuity between seat cushion heater 3P connector terminal No. 2 and seat-back heater 2P connector terminal No. 2. There should be continuity. If there is no continuity, repair an open in the wire between the seat cushion heater and the seat-back heater.

Switch Test/Replacement

Front Seat

1. Remove the center console panel (see page 20-92).
2. Disconnect the 6P connector from the seat heater switch (A).

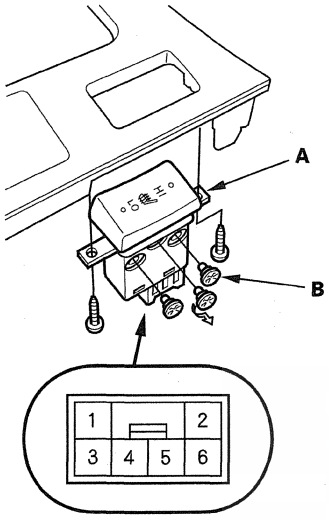

3. Remove the two screws and the switch.
4. Check for continuity between terminals in each switch position according to the table.

Position		1		2	3	4		5	6
ON	HIGH	○	○	○	○	○	○	○	
	LOW	○	○	○		○	○	○	
OFF		○	○	○					

5. If the continuity is not as specified, replace the illumination bulbs (B) or the switch.

Rear Seat

1. Remove the console trim (see page 20-94).
2. Disconnect the 6P connector from the seat heater switch (A).

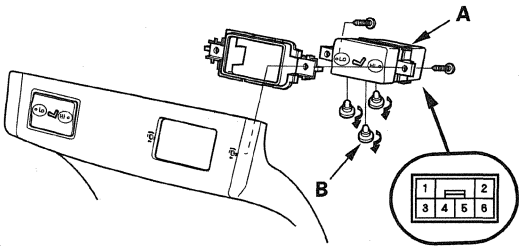

3. Remove the two screws and the switch.
4. Check for continuity between terminals in each switch position according to the table.

Position		1		2	3	4		5	6
ON	HIGH	○	○	○	○	○	○	○	
	LOW	○	○	○		○	○	○	
OFF		○	○	○					

5. If the continuity is not as specified, replace the illumination bulbs (B) or the switch.

Power Lumbar Support

Component Location Index

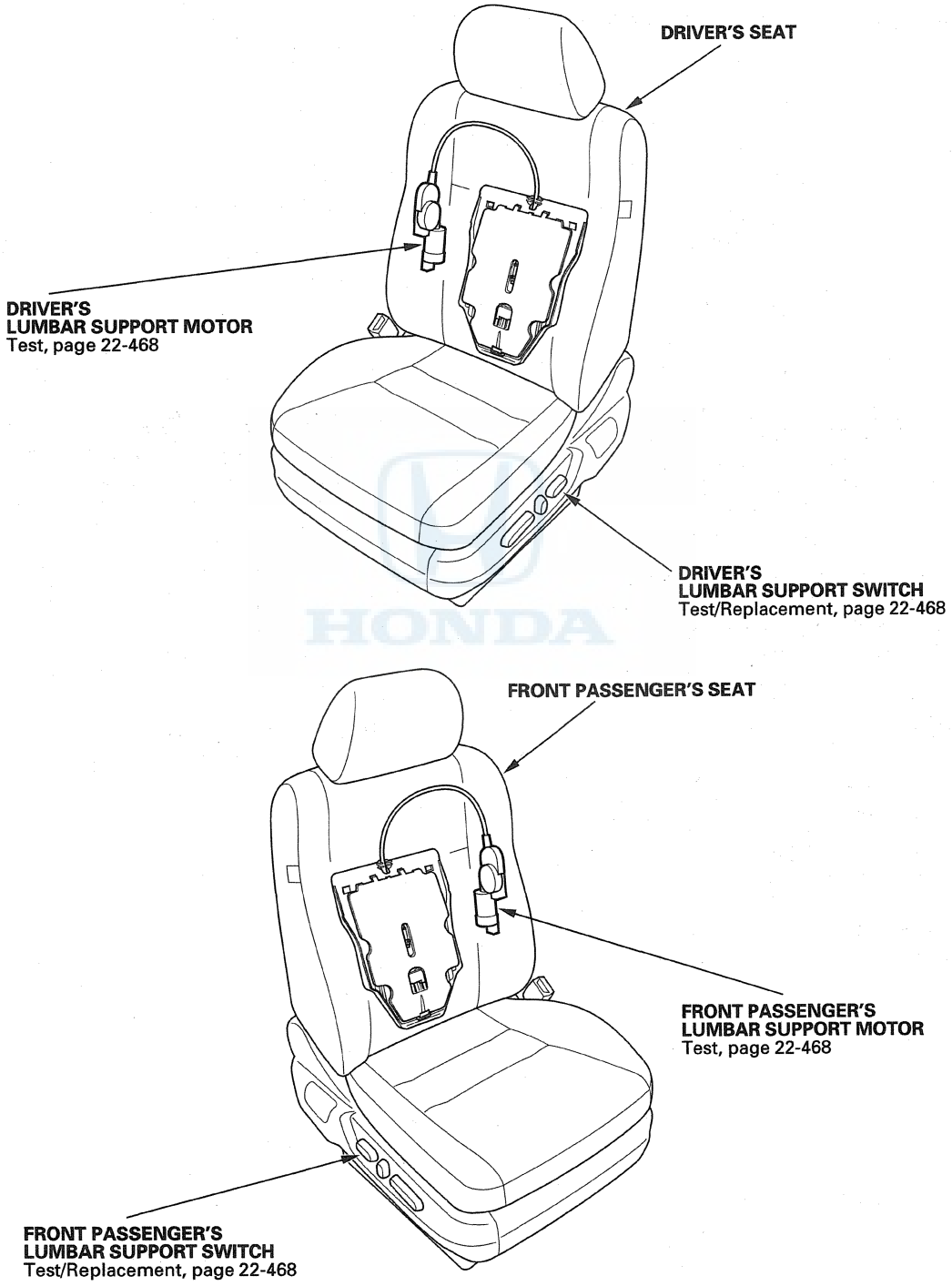

Circuit Diagram

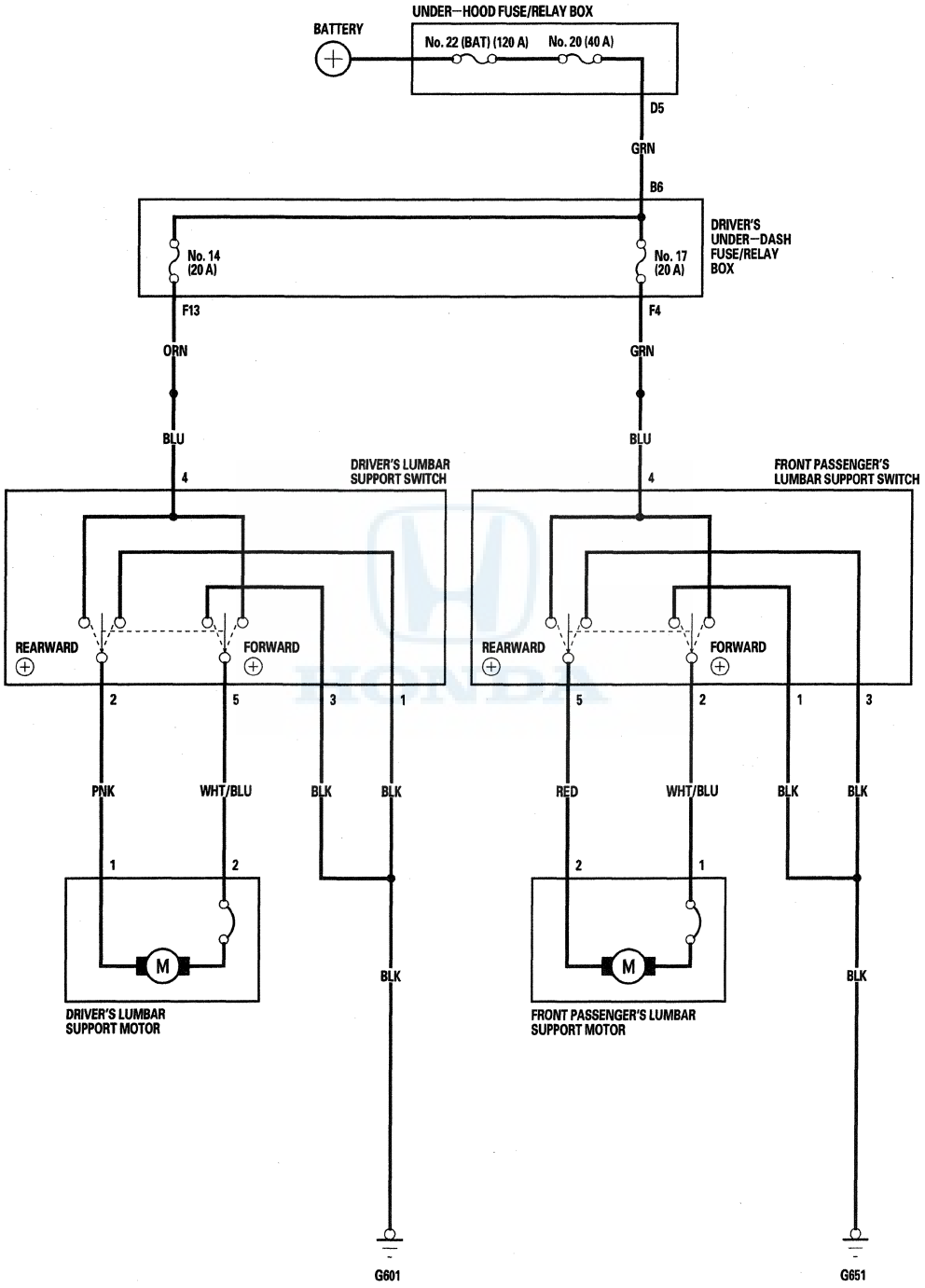

Power Lumbar Support

Switch Test/Replacement

1. Separate the lumbar support switch cover (A) from the switch (B) to remove the switch.

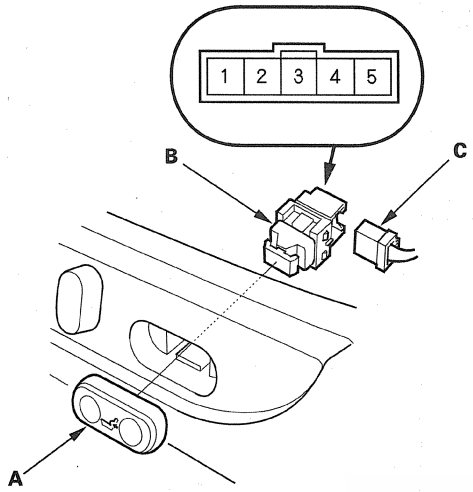

The illustration shows the driver's seat.

2. Disconnect the 5P connector (C) from the switch.
3. Check for continuity between terminals in each switch position according to the table.

Driver's Seat

Position \ Terminal	1	2	3	4	5
FORWARD	○	○		○	○
REARWARD		○	○	○	○

Front Passenger's Seat

Position \ Terminal	1	2	3	4	5
FORWARD		○	○	○	○
REARWARD	○	○		○	○

4. If the continuity is not as specified, replace the switch.

Motor Test

1. Remove the seat-back cover (see page 20-128).
2. Disconnect the 2P connector (A) from the lumbar support motor (B).

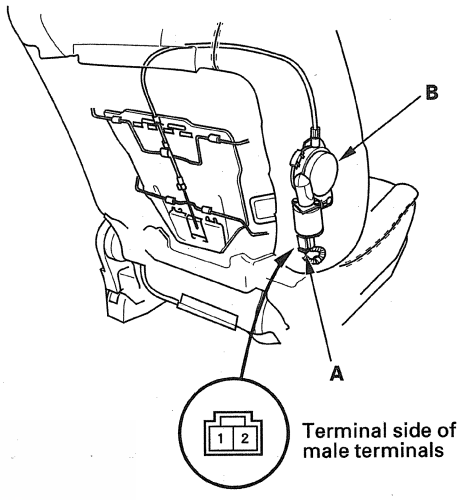

The illustration shows the driver's seat.

3. Test each motor by applying battery voltage and body ground to the terminals.

Position \ Terminal	1 [2]	2 [1]
FORWARD	⊖	⊕
REARWARD	⊕	⊖

[ ] : **Front passenger's seat**

4. If the motor does not run or fails to run smoothly, replace it (see page 20-118).

Power Seats

Component Location Index

For the driver's power seat, refer to the Driving Position Memory System (DPMS)
Component Location Index, page 22-510

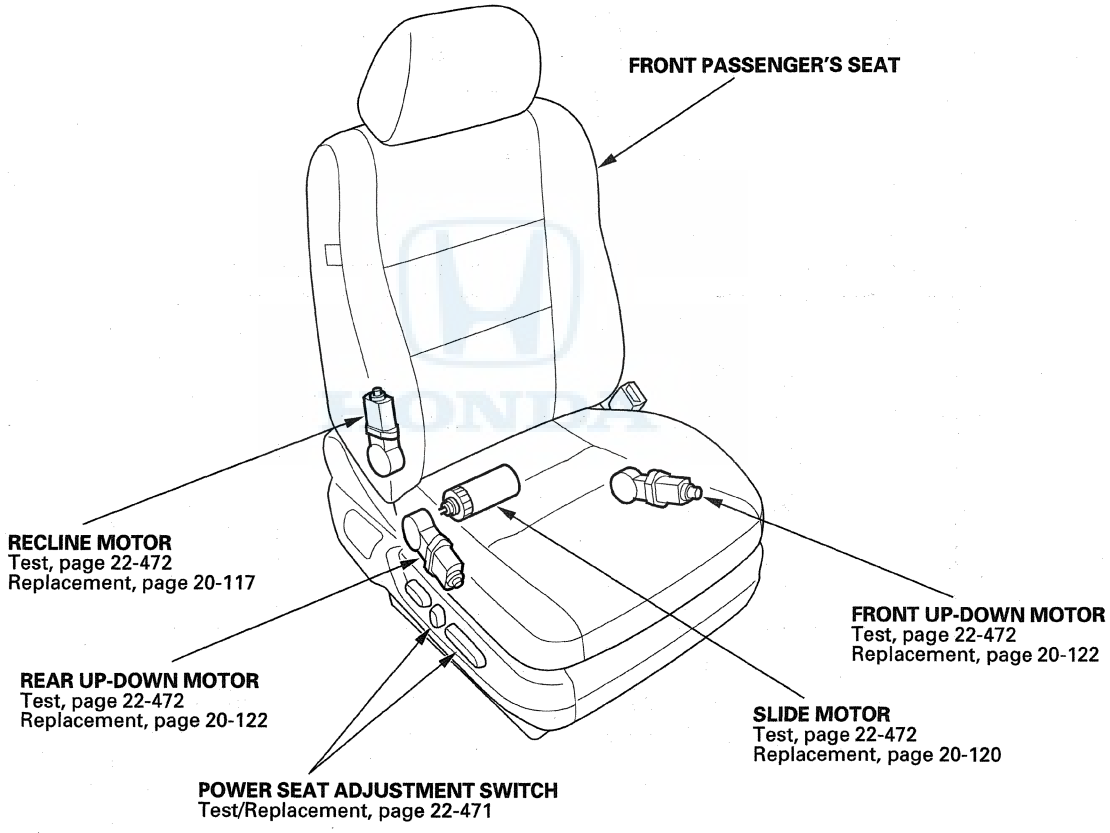

Circuit Diagram - Front Passenger's Power Seat

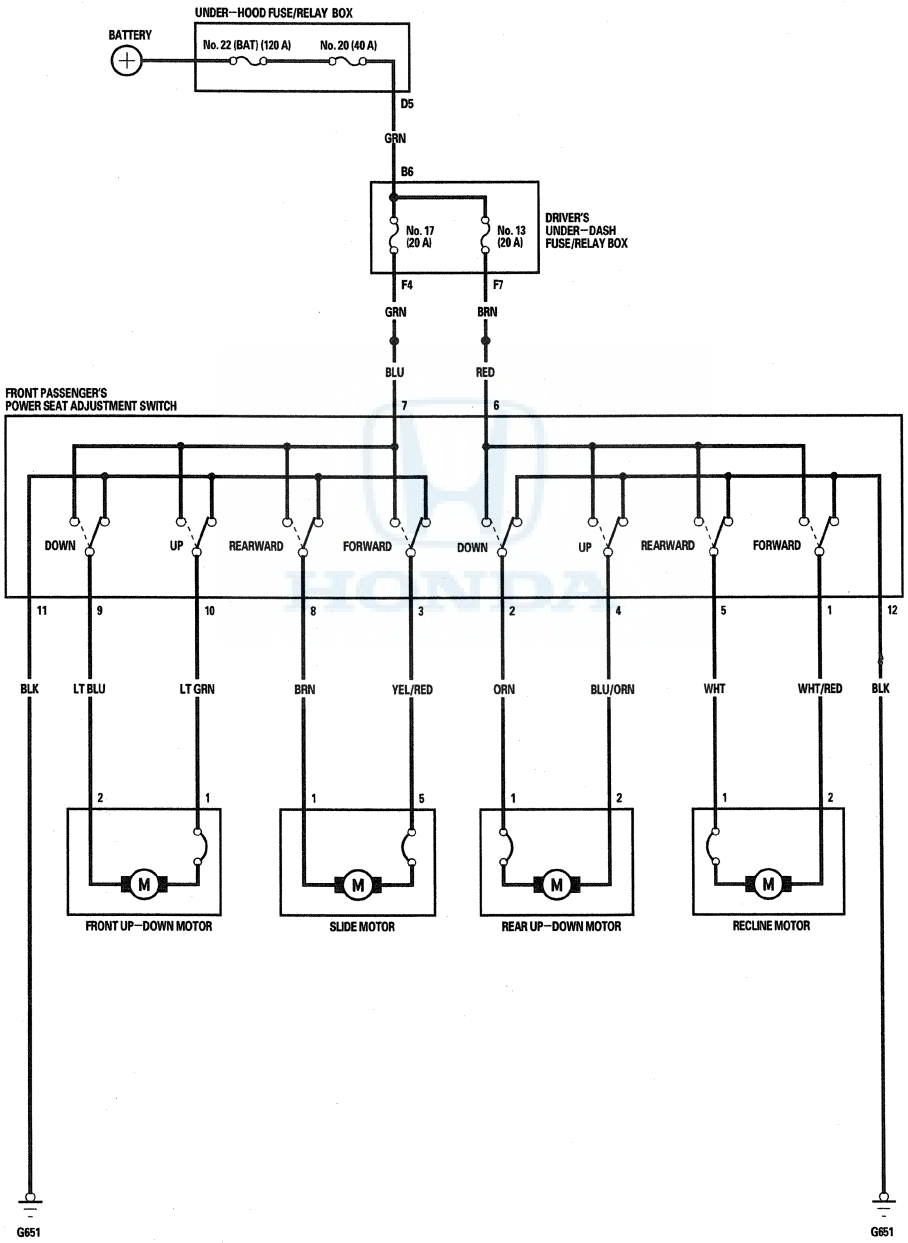

Power Seat Adjustment Switch Test/Replacement

NOTE: For the driver's power seat, refer to the Driving Position Memory System (DPMS) (see page 22-571).

Front Passenger's Seat

1. Remove the power seat adjustment switch knobs (A) and recline cover from the front passenger's seat (see page 20-133).

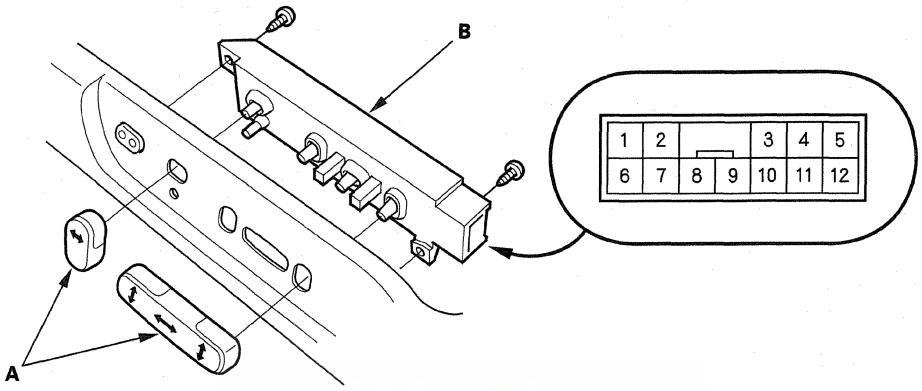

2. Remove the two screws and power seat adjustment switch (B).
3. Disconnect the 12P connector from the power seat adjustment switch.
4. Reinstall the switch knobs to the switch.
5. Check for continuity between the terminals in each switch position according to the table.

Position \ Terminal		1	2	3	4	5	6	7	8	9	10	11	12
SLIDE SWITCH	FORWARD			○				○	○			○	
	REARWARD			○				○	○			○	
RECLINE SWITCH	FORWARD	○				○	○						○
	REARWARD	○				○	○						○
FRONT UP-DOWN SWITCH	UP							○		○	○	○	
	DOWN							○		○	○	○	
REAR UP-DOWN SWITCH	UP		○		○		○						○
	DOWN		○		○		○						○

6. If the continuity is not as specified, replace the switch.

Front Passenger's Power Seat Motor Test

1. Remove the front passenger's seat (see page 20-114).

   NOTE: For recline motor test only, remove the seat-back cover (see page 20-128).

2. Disconnect the connector from the each power seat motor.

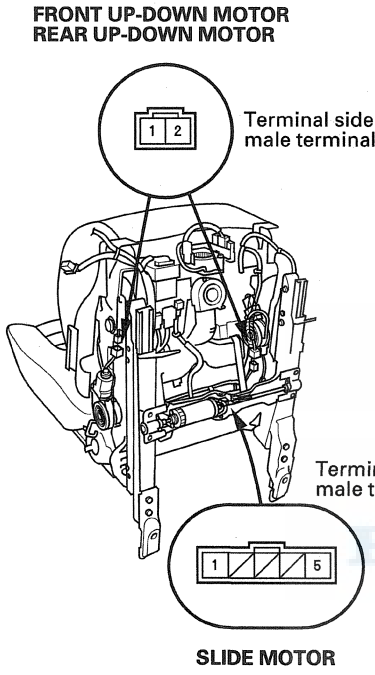

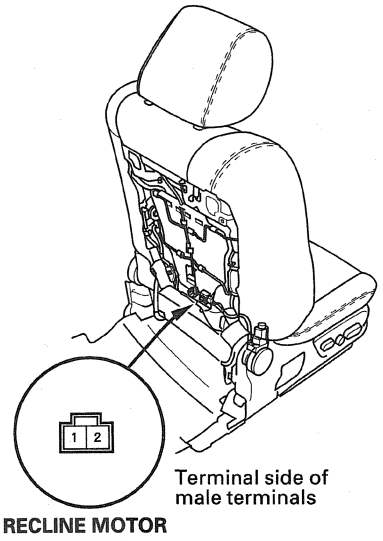

3. Test each motor by applying battery voltage and body ground to the table. When the motor stops running, disconnect battery power immediately.

Position \ Terminal		1	5
SLIDE MOTOR	FORWARD	⊖	⊕
	REARWARD	⊕	⊖

Position \ Terminal		1	2
FRONT UP-DOWN MOTOR	UP	⊕	⊖
	DOWN	⊖	⊕

Position \ Terminal		1	2
REAR UP-DOWN MOTOR	UP	⊖	⊕
	DOWN	⊕	⊖

Position \ Terminal		1	2
RECLINE MOTOR	FORWARD	⊖	⊕
	REARWARD	⊕	⊖

4. If the motor does not run or fails to run smoothly, replace the motor.

   - Slide motor (see page 20-120)
   - Front up-down motor (see page 20-122)
   - Rear up-down motor (see page 20-122)
   - Recline motor (see page 20-117)

Power Rear Window Sunshade

Component Location Index

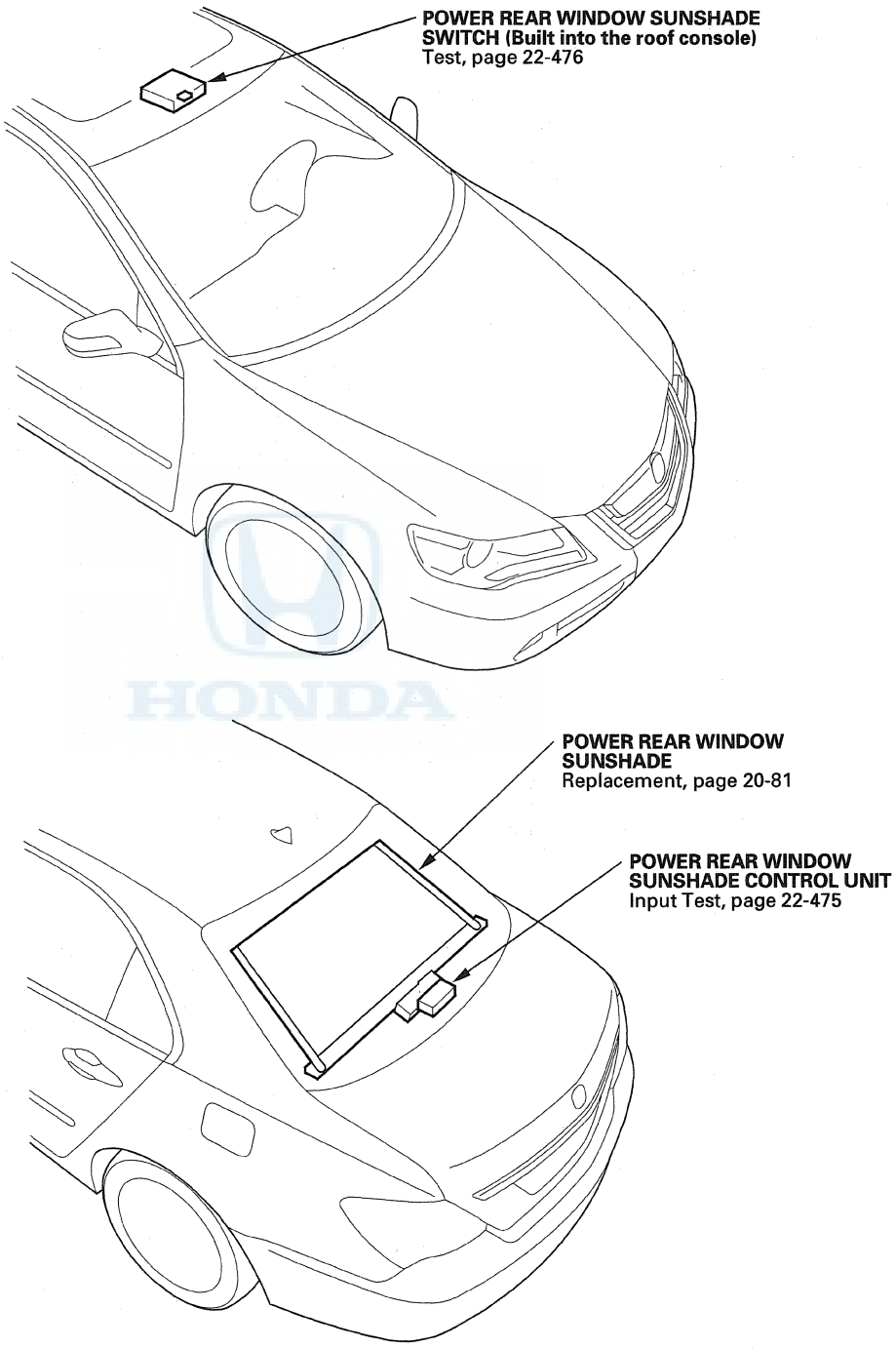

Power Rear Window Sunshade

Circuit Diagram

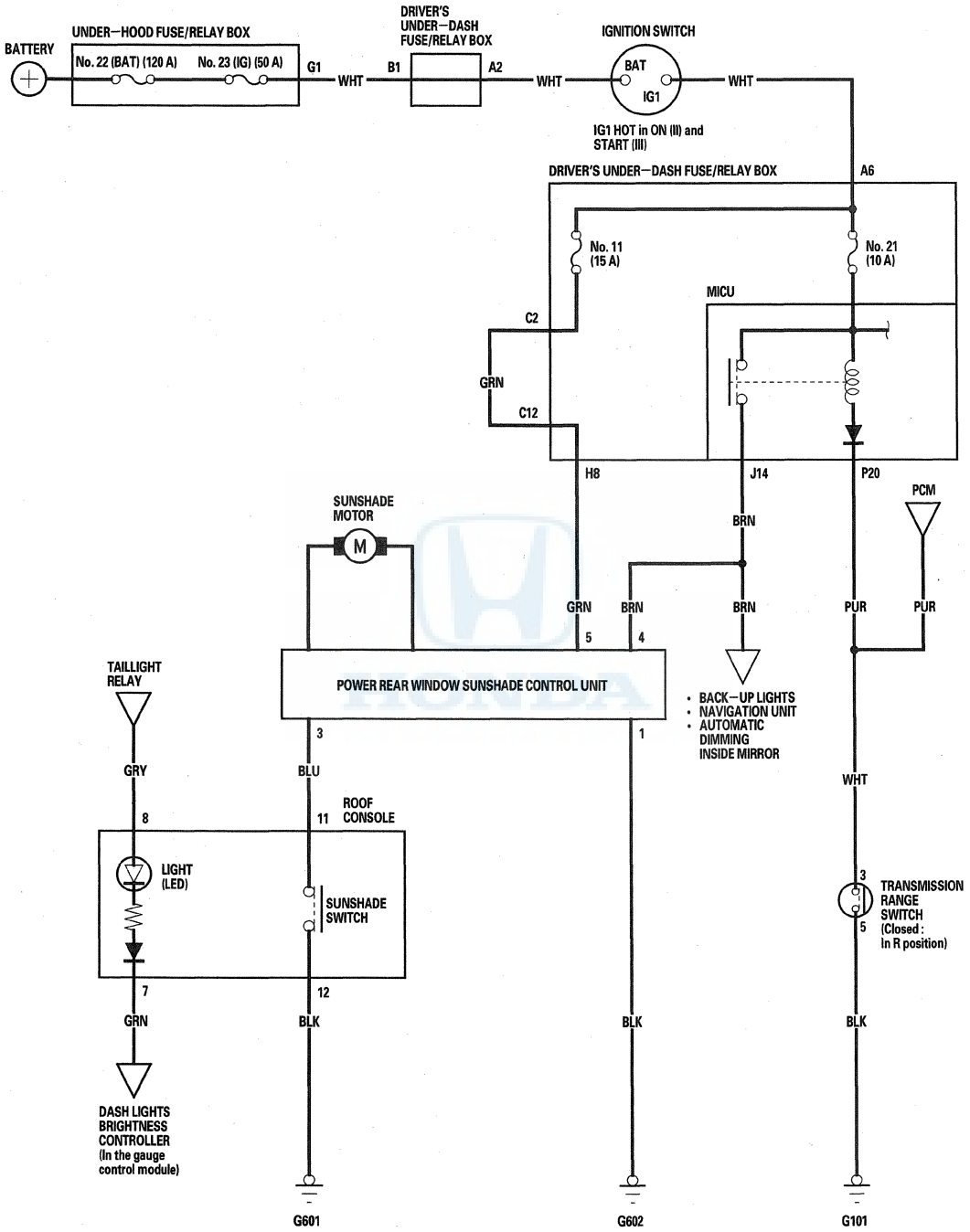

Control Unit Input Test

1. Remove the rear shelf under cover (see page 20-80).

2. Disconnect the 5P connector (A) from the power rear window sunshade control unit (B).

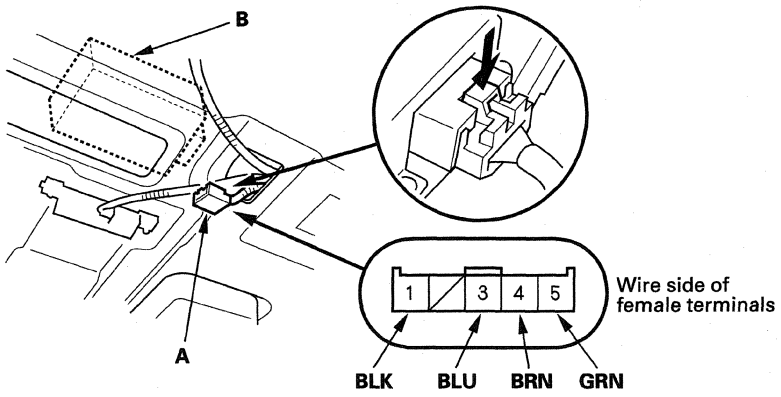

3. Inspect the connector and socket terminals to be sure they are all making good contact.

   - If the terminals are bent, loose, or corroded, repair them as necessary, and recheck the system.
   - If the terminals look OK, go to step 4.

4. Reconnect the connector to the control unit, and do these input tests at the following connector.

   - If any test indicates a problem, find and correct the cause, then recheck the system.
   - If all the input tests prove OK, the control unit must be faulty; replace the power rear window sunshade.

Cavity	Wire	Test condition	Test: Desired result	Possible cause if desired result is not obtained
1	BLK	Ignition switch ON (II)	Measure the voltage to ground: There should be less than 0.2 V.	• Poor ground (G602) • An open in the wire
5	GRN	Ignition switch ON (II)	Measure the voltage to ground: There should be battery voltage.	• Blown No. 11 (15 A) fuse in the driver's under-dash fuse/relay box • An open in the wire
4	BRN	Ignition switch ON (II), transmission range switch in R	Measure the voltage to ground: There should be battery voltage.	• Blown No. 21 (10 A) fuse in the driver's under-dash fuse/relay box • Faulty driver's under-dash fuse/relay box • Faulty transmission range switch • An open in the wire
3	BLU	Ignition switch ON (II), sunshade switch ON	Measure the voltage to ground: There should be less than 0.2 V.	• Poor ground (G601) • Faulty sunshade switch • An open in the wire
		Ignition switch ON (II), sunshade switch OFF	Measure the voltage to ground: There should be at least 5 V.	• Faulty sunshade switch • A short to ground in the wire

Switch Test

1. Remove the roof console (see page 22-307).
2. Disconnect the 28P connector (A) from the roof console (B).

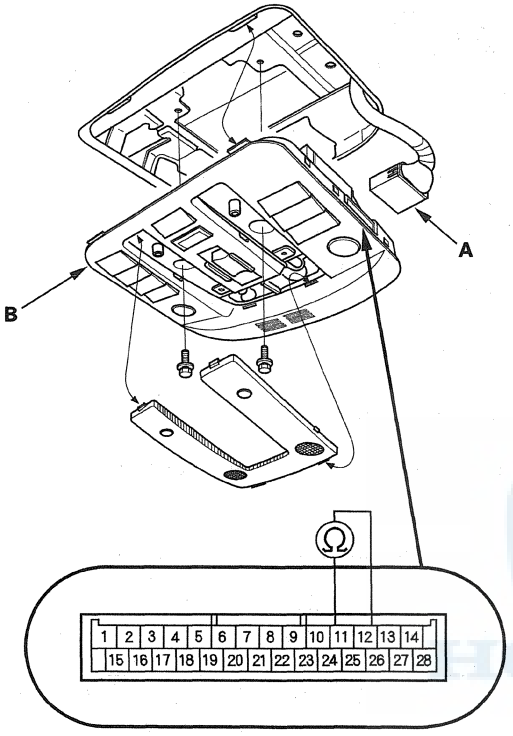

ROOF CONSOLE 28P CONNECTOR

3. Check for continuity between terminals No. 11 and No. 12.
   - There should be continuity when the switch is pushed.
   - There should be no continuity when the switch is released.
4. If the continuity is not as specified, replace the roof console (see page 22-307).

Ventilated Seats

Component Location Index

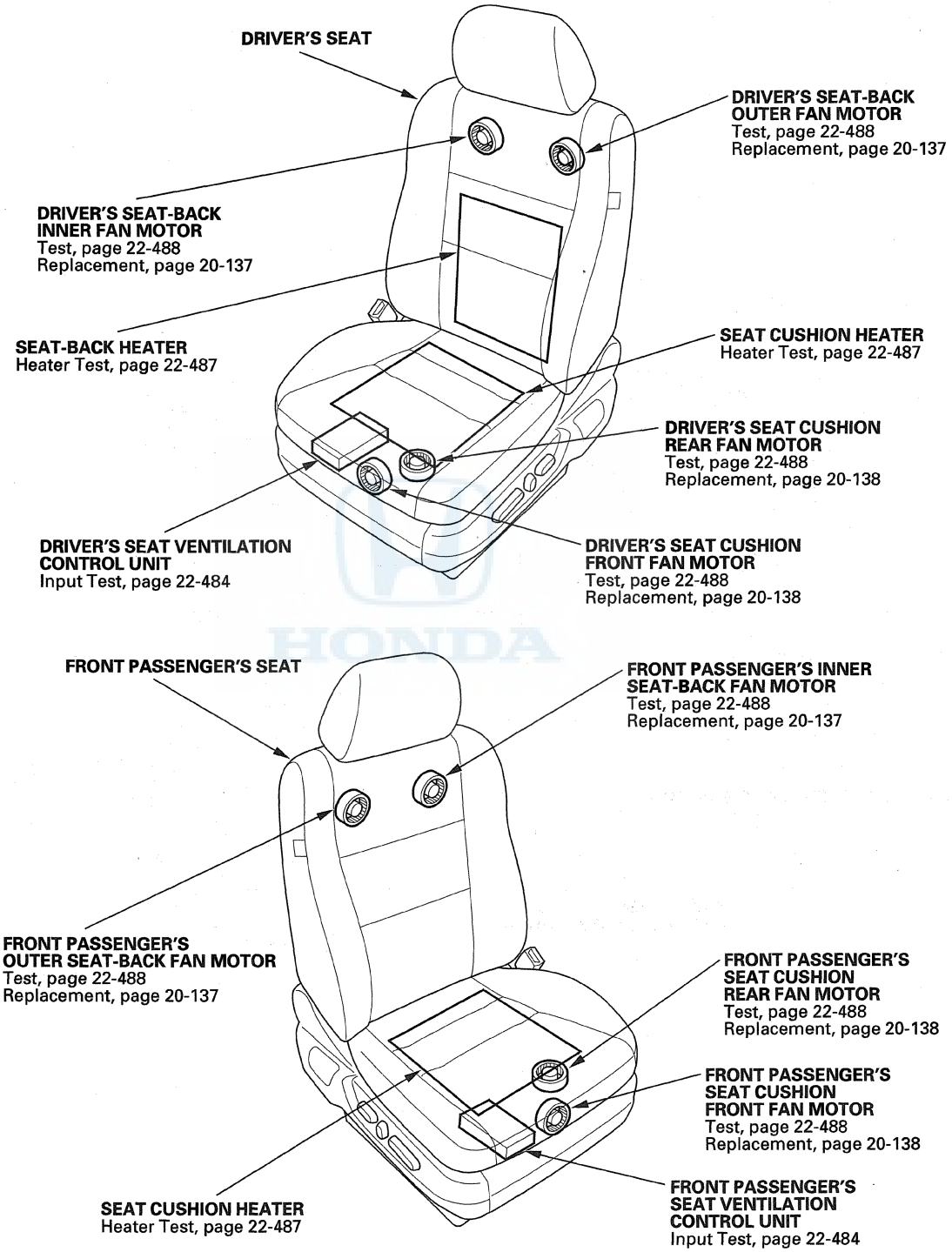

(cont'd)

Component Location Index (cont'd)

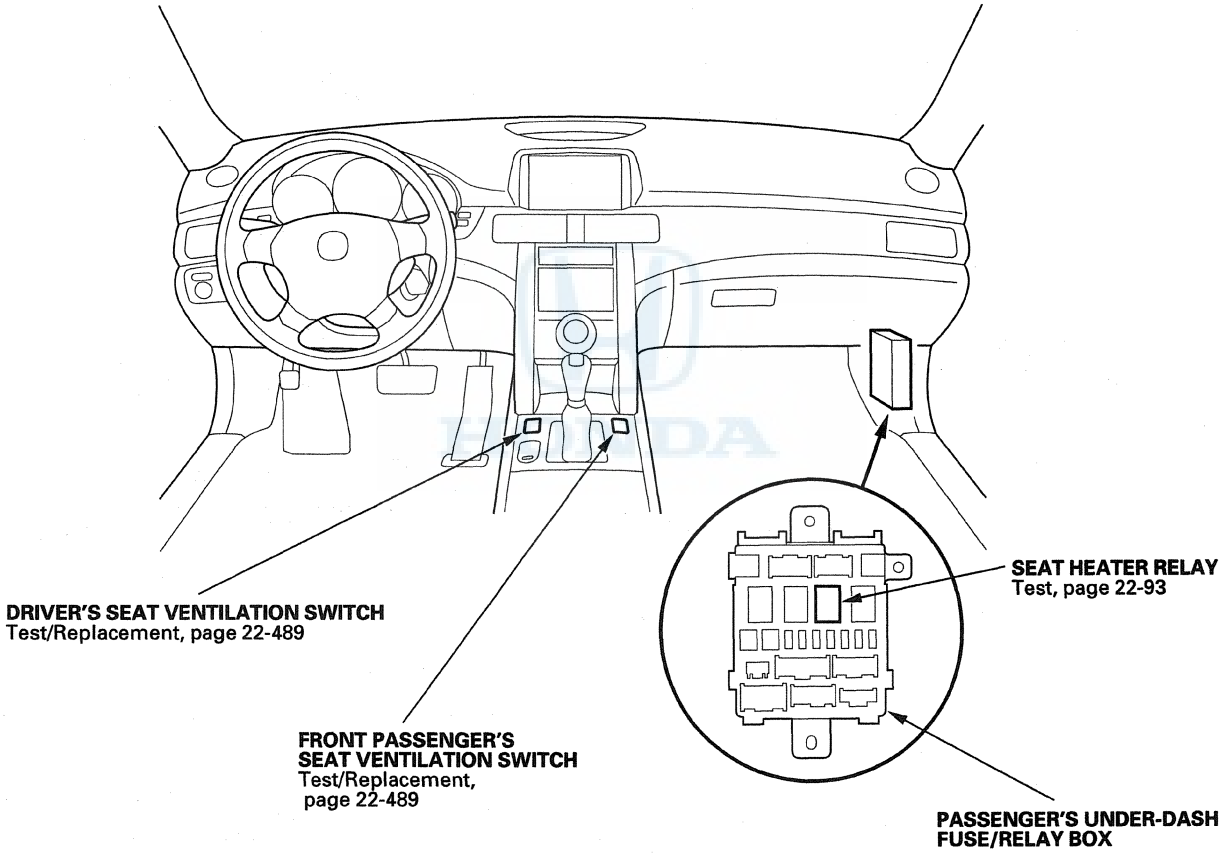

Self-diagnostic Function

The seat ventilation control unit has a thermistor self-diagnostic function. The control unit checks for an open or short in the thermistor, and it indicates the result by lighting the LEDs of the seat ventilation switch.

Entering the self-diagnostic function

1. Turn the ignition switch to ON (II), and do the next step within 5 seconds.
2. Push the DOWN side of the seat ventilation switch three times, and the UP side six times, then the DOWN side three times.
3. If the system enters the self-diagnostic mode, all of the LEDs turn on for 6 seconds, then indicate the result.
   - If the three LEDs of the heater side turn on, the thermistor is faulty.
   - If no LED turns on, the thermistor is OK.

NOTE: The system has a timer function.

- The fan motor timer: About 15 minutes after the fan motor HIGH position is ON, the control unit changes the fan motor speed, and switch LED indicators from Hi to Mid.
- The seat heater timer: About 5 minutes after the heater temperature rises over 140 °F (60 °C), the control unit changes the heater temperature, and switch LED indicators from Hi to Mid.
- The seat heater timer: About an hour after the heater temperature rises over 115 °F (46 °C), the control unit changes the heater temperature, and switch LED indicators from Mid to LO.

Ending the self-diagnostic function

To exit the self-diagnostic mode, turn the ignition switch to LOCK (0).

Ventilated Seats

Circuit Diagram

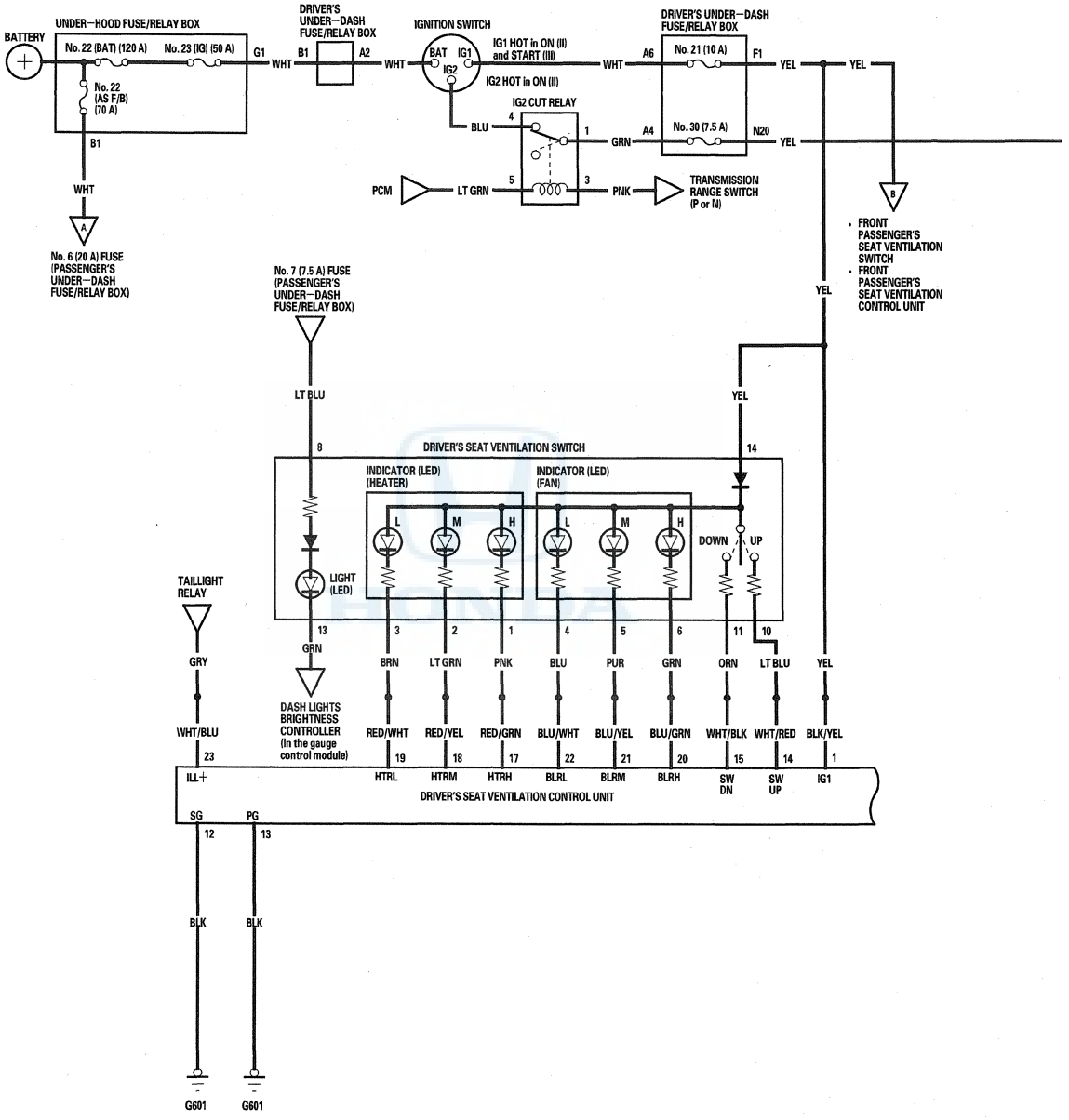

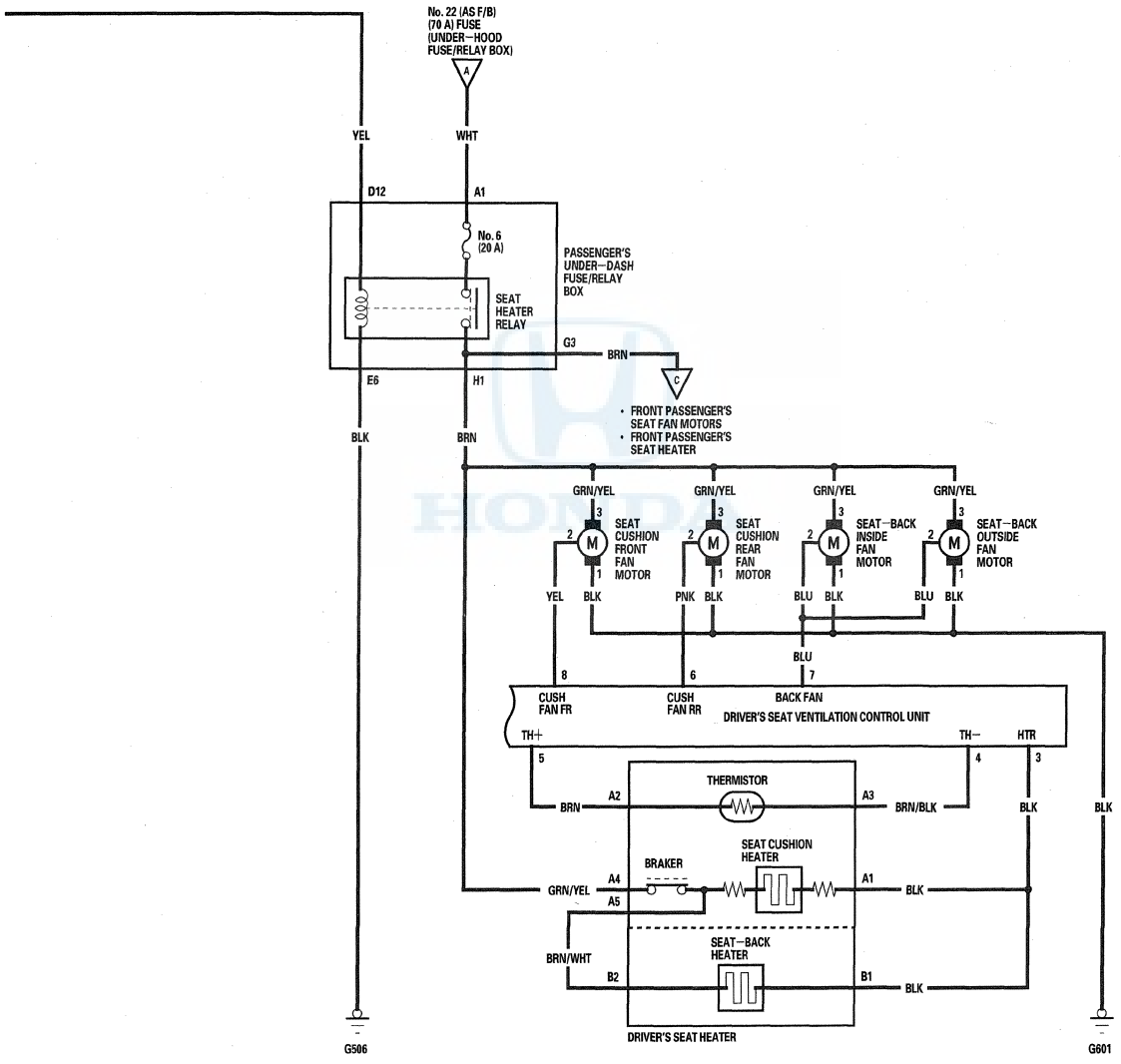
No. 22 (AS F/B)
(70 A) FUSE
(UNDER-HOOD
FUSE/RELAY BOX)
A
YEL
WHT
D12
A1
No. 6
(20 A)
PASSENGER'S
UNDER-DASH
FUSE/RELAY
BOX
SEAT
HEATER
RELAY
G3
BRN
C
E6
H1
BLK
BRN
• FRONT PASSENGER'S
SEAT FAN MOTORS
• FRONT PASSENGER'S
SEAT HEATER
GRN/YEL
GRN/YEL
GRN/YEL
GRN/YEL
SEAT
CUSHION
FRONT
FAN
MOTOR
SEAT
CUSHION
REAR
FAN
MOTOR
SEAT-BACK
INSIDE
FAN
MOTOR
SEAT-BACK
OUTSIDE
FAN
MOTOR
YEL
BLK
PNK
BLK
BLU
BLK
BLU
BLK
BLU
8
6
7
CUSH
FAN FR
CUSH
FAN RR
BACK FAN
DRIVER'S SEAT VENTILATION CONTROL UNIT
TH+
TH-
HTR
5
4
3
THERMISTOR
A2
A3
BRN
BRN/BLK
BLK
BLK
SEAT CUSHION
HEATER
BRAKER
A4
A1
GRN/YEL
BLK
A5
SEAT-BACK
HEATER
BRN/WHT
B2
B1
BLK
DRIVER'S SEAT HEATER
G506
G601

(cont'd)

Circuit Diagram (cont'd)

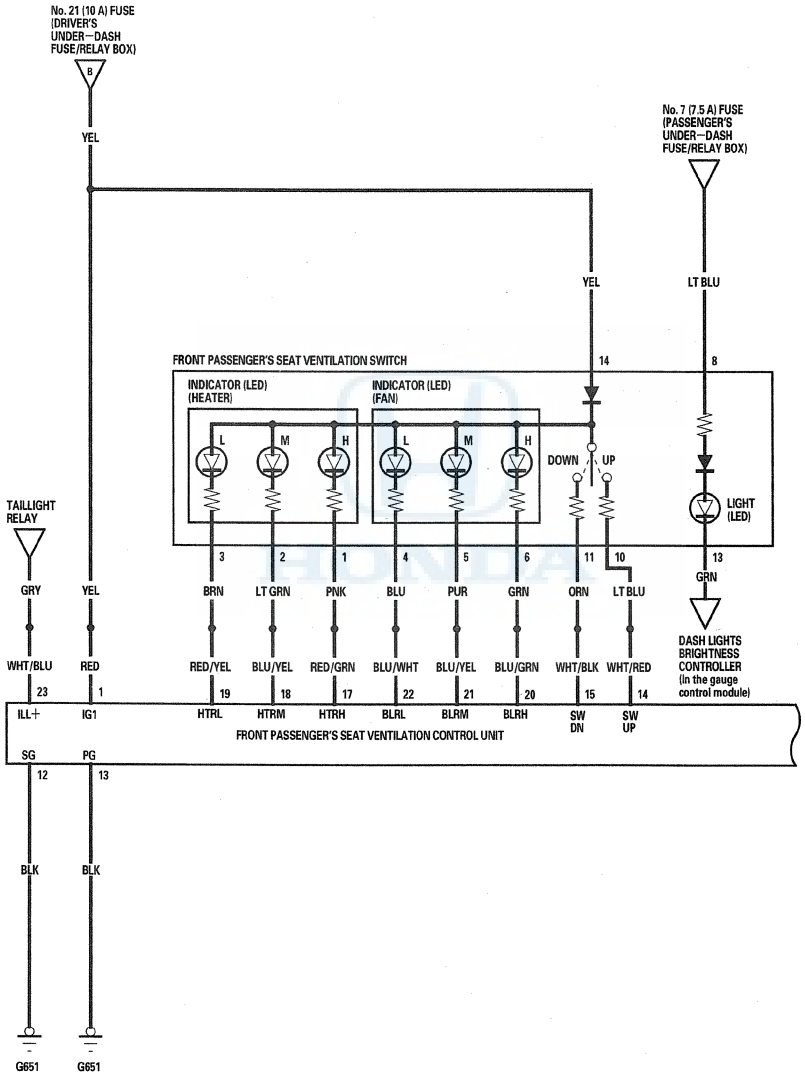

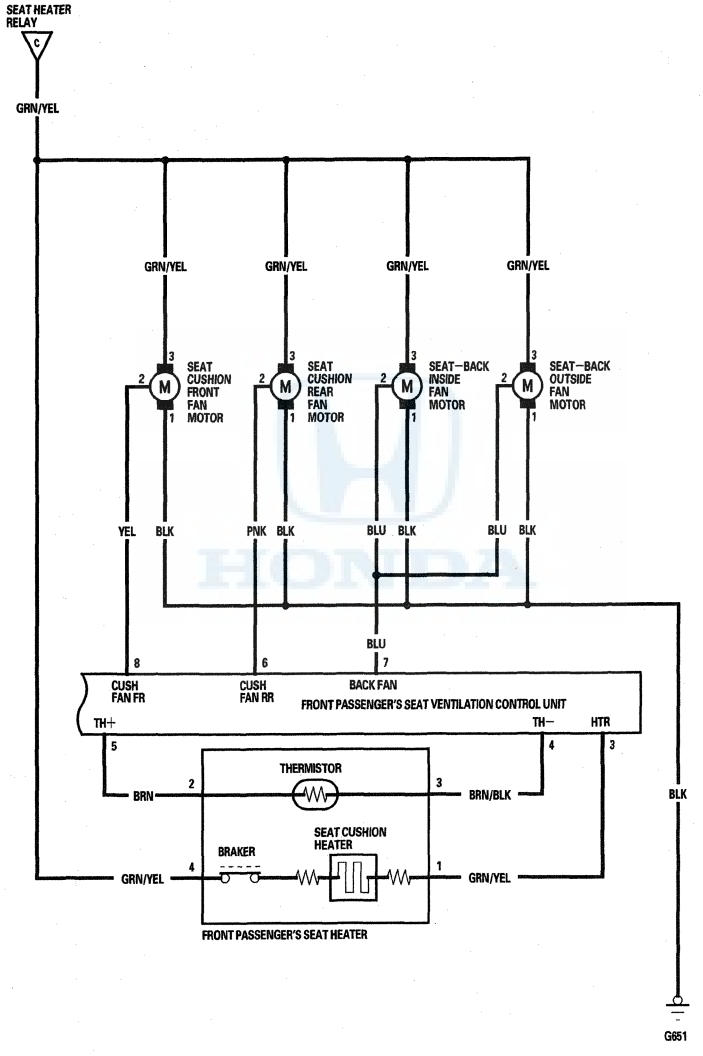
SEAT HEATER RELAY
C
GRN/YEL
GRN/YEL
GRN/YEL
GRN/YEL
GRN/YEL
3
2
M
1
SEAT CUSHION FRONT FAN MOTOR
SEAT CUSHION REAR FAN MOTOR
SEAT–BACK INSIDE FAN MOTOR
SEAT–BACK OUTSIDE FAN MOTOR
YEL
BLK
PNK
BLK
BLU
BLK
BLU
BLK
BLU
8
6
7
CUSH FAN FR
CUSH FAN RR
BACK FAN
FRONT PASSENGER'S SEAT VENTILATION CONTROL UNIT
TH+
TH–
HTR
5
4
3
THERMISTOR
BRN
BRN/BLK
SEAT CUSHION HEATER
BRAKER
GRN/YEL
GRN/YEL
BLK
FRONT PASSENGER'S SEAT HEATER
G651

Control Unit Input Test

NOTE: Before testing, check the No. 22 (AS F/B) (70 A) fuse in the under-hood fuse/relay box, the No. 30 (7.5 A) fuse in the driver's under-dash fuse/relay box, and the No. 6 (20 A) fuse in the passenger's under-dash fuse/relay box.

1. Remove the driver's or front passenger's seat (see page 20-114).
2. Disconnect the 26P connector (A) from the seat ventilation control unit (B).

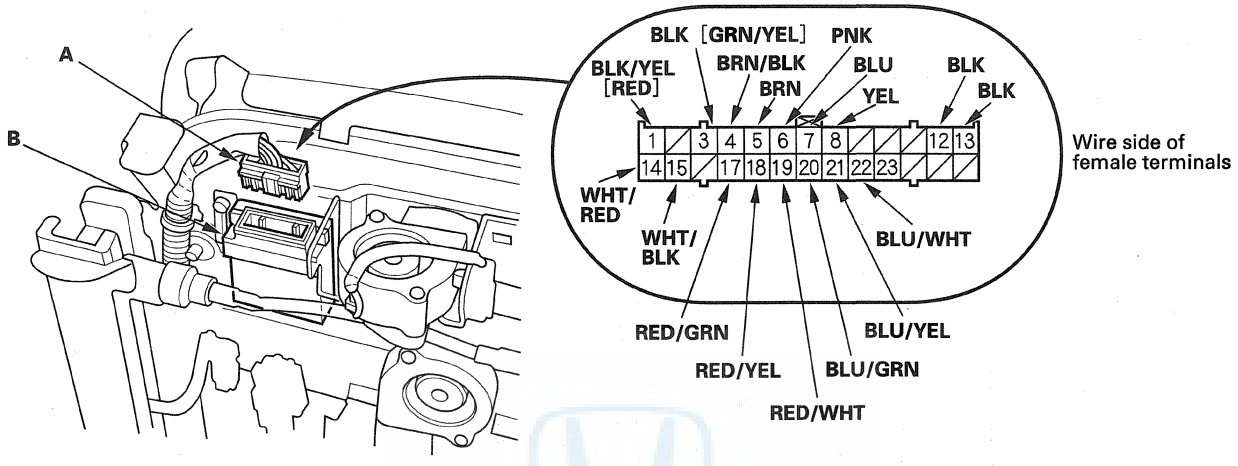

[ ] : **Front passenger's seat**

3. Inspect the connector and socket terminals to be sure they are all making good contact.
   - If the terminals are bent, loose or corroded, repair them as necessary, and recheck the system.
   - If the terminals look OK, go to step 4.
4. Reconnect the 26P connector to the control unit, and do these input tests at the following connector.
   - If any test indicates a problem, find and correct the cause, then recheck the system.
   - If all the input tests prove OK, go to step 5.

Cavity	Wire	Test condition	Test: Desired result	Possible cause if desired result is not obtained
12	BLK	Ignition switch ON (II)	Measure the voltage to ground: There should be less than 0.2 V.	• Poor ground (G601) [G651] • An open in the wire
13	BLK	Ignition switch ON (II)	Measure the voltage to ground: There should be less than 0.2 V.	• Poor ground (G601) [G651] • An open in the wire
1	BLK/YEL [RED]	Ignition switch ON (II)	Measure the voltage to ground: There should be battery voltage.	• Blown No. 21 (10 A) fuse in the driver's under-dash fuse/relay box • Faulty driver's under-dash fuse/relay box • An open in the wire

[ ] : Front passenger's seat

5. Disconnect the 26P connector from the control unit, and do these input tests at the following connector.

- If any test indicates a problem, find and correct the cause, then recheck the system.
- If all the input tests prove OK, the control unit must be faulty; replace it.

Cavity	Wire	Test condition	Test: Desired result	Possible cause if desired result is not obtained
3	BLK [GRN/YEL]	Ignition switch ON (II)	Measure the voltage to ground: There should be battery voltage.	• Blown No. 6 (20A) fuse in the passenger's under-dash fuse/relay box • Poor ground (G506) • Faulty seat heater relay • Faulty seat heater • Faulty passenger's under-dash fuse/relay box • An open in the wire
4	BRN/BLK	Under all conditions	Check for continuity between terminals No. 4 and No. 5: There should be continuity.	• Faulty seat heater • An open in the wire
5	BRN			
6	PNK	Ignition switch ON (II)	Attach to ground: The seat cushion rear fan motor should run.	• Poor ground (G506, G601, [G651]) • Faulty seat heater relay • Faulty seat cushion rear fan motor • Faulty passenger's under-dash fuse/relay box • An open in the wire
7	BLU	Ignition switch ON (II)	Attach to ground: The seat-back fan motors should run.	• Poor ground (G506, G601, [G651]) • Faulty seat heater relay • Faulty seat-back inner fan motor • Faulty seat-back outer fan motor • Faulty passenger's under-dash fuse/relay box • An open in the wire
8	YEL	Ignition switch ON (II)	Attach to ground: The seat cushion front fan motor should run.	• Poor ground (G506, G601, [G651]) • Faulty seat heater relay • Faulty seat cushion front fan motor • Faulty passenger's under-dash fuse/relay box • An open in the wire

[ ] : Front passenger's seat

(cont'd)

Control Unit Input Test (cont'd)

Cavity	Wire	Test condition	Test: Desired result	Possible cause if desired result is not obtained
14	WHT/RED	Ignition switch ON (II), seat ventilation switch UP side pushed	Measure the voltage to ground: There should be battery voltage.	• Blown No. 21 (10 A) fuse in the driver's under-dash fuse/relay box • Faulty seat ventilation switch • An open in the wire
15	WHT/BLK	Ignition switch ON (II), seat ventilation switch DOWN side pushed	Measure the voltage to ground: There should be battery voltage.	• Blown No. 21 (10 A) fuse in the driver's under-dash fuse/relay box • Faulty seat ventilation switch • An open in the wire
17	RED/GRN	Ignition switch ON (II)	Attach to ground: The seat heater HIGH indicator should come on.	• Blown No. 21 (10 A) fuse in the driver's under-dash fuse/relay box • Faulty seat ventilation switch • An open in the wire
18	RED/YEL	Ignition switch ON (II)	Attach to ground: The seat heater MIDDLE indicator should come on.	• Blown No. 21 (10 A) fuse in the driver's under-dash fuse/relay box • Faulty seat ventilation switch • An open in the wire
19	RED/WHT	Ignition switch ON (II)	Attach to ground: The seat heater LOW indicator should come on.	• Blown No. 21 (10 A) fuse in the driver's under-dash fuse/relay box • Faulty seat ventilation switch • An open in the wire
20	BLU/GRN	Ignition switch ON (II)	Attach to ground: The seat fan HIGH indicator should come on.	• Blown No. 21 (10 A) fuse in the driver's under-dash fuse/relay box • Faulty seat ventilation switch • An open in the wire
21	BLU/YEL	Ignition switch ON (II)	Attach to ground: The seat fan MIDDLE indicator should come on.	• Blown No. 21 (10 A) fuse in the driver's under-dash fuse/relay box • Faulty seat ventilation switch • An open in the wire
22	BLU/WHT	Ignition switch ON (II)	Attach to ground: The seat fan LOW indicator should come on.	• Blown No. 21 (10 A) fuse in the driver's under-dash fuse/relay box • Faulty seat ventilation switch • An open in the wire

[ ] : Front passenger's seat

Seat Heater Test

Driver's Seat

1. Remove the driver's seat (see page 20-114), then remove the seat-back cover (see page 20-128).

2. Disconnect the 5P connector (A) from the seat cushion heater and 2P connector (B) from the seat-back heater.

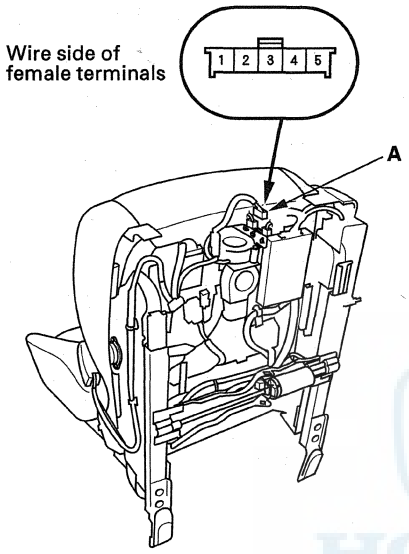

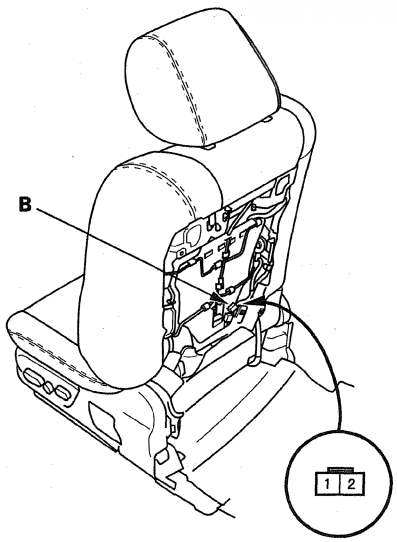

Wire side of female terminals

Seat Cushion Heater Test

3. Check for continuity between seat cushion heater 5P connector terminals No. 2 and No. 3. There should be continuity. If there is no continuity, replace the seat cushion heater.

4. Check for continuity between seat cushion heater 5P connector terminals No. 1 and No. 4. There should be continuity, replace the seat cushion heater.

Seat-back Heater Test

5. Check for continuity between seat-back heater 2P connector terminals No. 1 and No. 2. There should be continuity. If there is no continuity, replace the seat-back heater.

6. Reconnect the 5P and 2P connectors to the seat heaters, and check for continuity between seat cushion heater 5P connector terminal No. 5 and seat-back heater 2P connector terminal No. 2. There should be continuity. If there is no continuity, repair an open in the wire between the seat cushion heater and the seat-back heater.

(cont'd)

Seat Heater Test (cont'd)

Front Passenger's Seat

1. Remove the front passenger's seat (see page 20-114).

2. Disconnect the 5P connector (A) from the seat cushion heater.

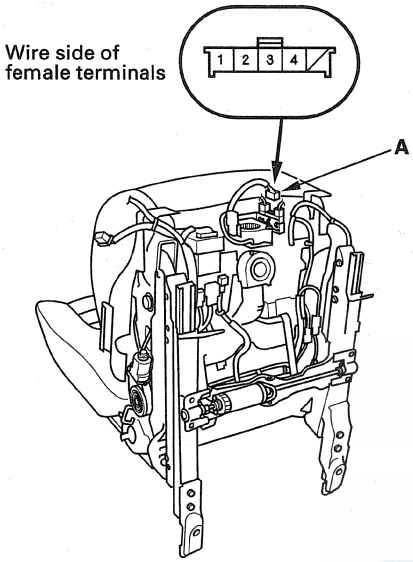

3. Check for continuity between seat cushion heater 5P connector terminals No. 2 and No. 3. There should be continuity. If there is no continuity, replace the seat cushion heater.

4. Check for continuity between seat cushion heater 5P connector terminals No. 1 and No. 4. There should be continuity. If there is no continuity, replace the seat cushion heater.

Fan Motor Test

1. Remove the driver's or front passenger's seat (see page 20-114), then remove the seat-back cover (see page 20-128).

2. Disconnect the 3P connector (A) from each fan motor (B).

Seat Cushion

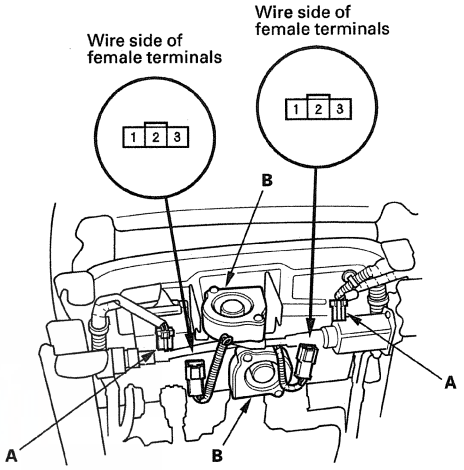

Seat-back

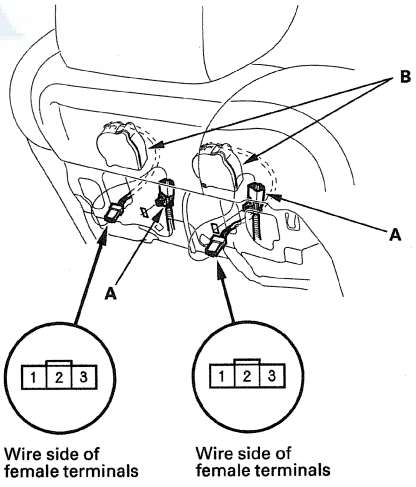

3. Connect battery power to fan motor 3P connector terminal No. 3 and ground terminal No. 1. The motor should run.

4. If the motor does not run or fails to run smoothly, replace the motor.

   - Seat cushion motor (see page 20-138).
   - Seat-back motor (see page 20-137).

Switch Test/Replacement

1. Remove the center console panel (see page 20-92).
2. Disconnect the 14P connector from the seat ventilation switch (A).

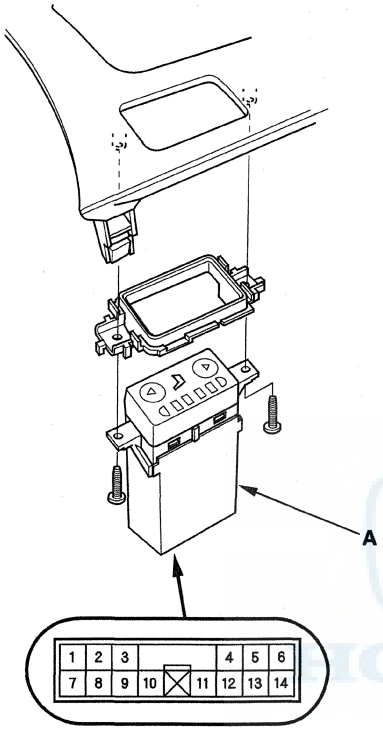

3. Remove the two screws and the switch.
4. Check for continuity between terminals No. 14 (+) and No. 10 (−).
   - There should be continuity when the switch UP side is pushed.
   - There should be no continuity when the switch is released.
5. Check for continuity between terminals No. 14 (+) and No. 11 (−).
   - There should be continuity when the switch DOWN side is pushed.
   - There should be no continuity when the switch is released.
6. If the continuity check is not as specified, replace the seat ventilation switch.

Indicator check

7. Swap the driver's and passenger's switch, and check the indicators.
   - If the indicators come on normally, replace the original switch.
   - If any of the indicators does not come on, check the wire harness between the switch and the seat ventilation control unit. If wire is OK, replace the seat ventilation control unit.

Power Rear Headrests

Component Location Index

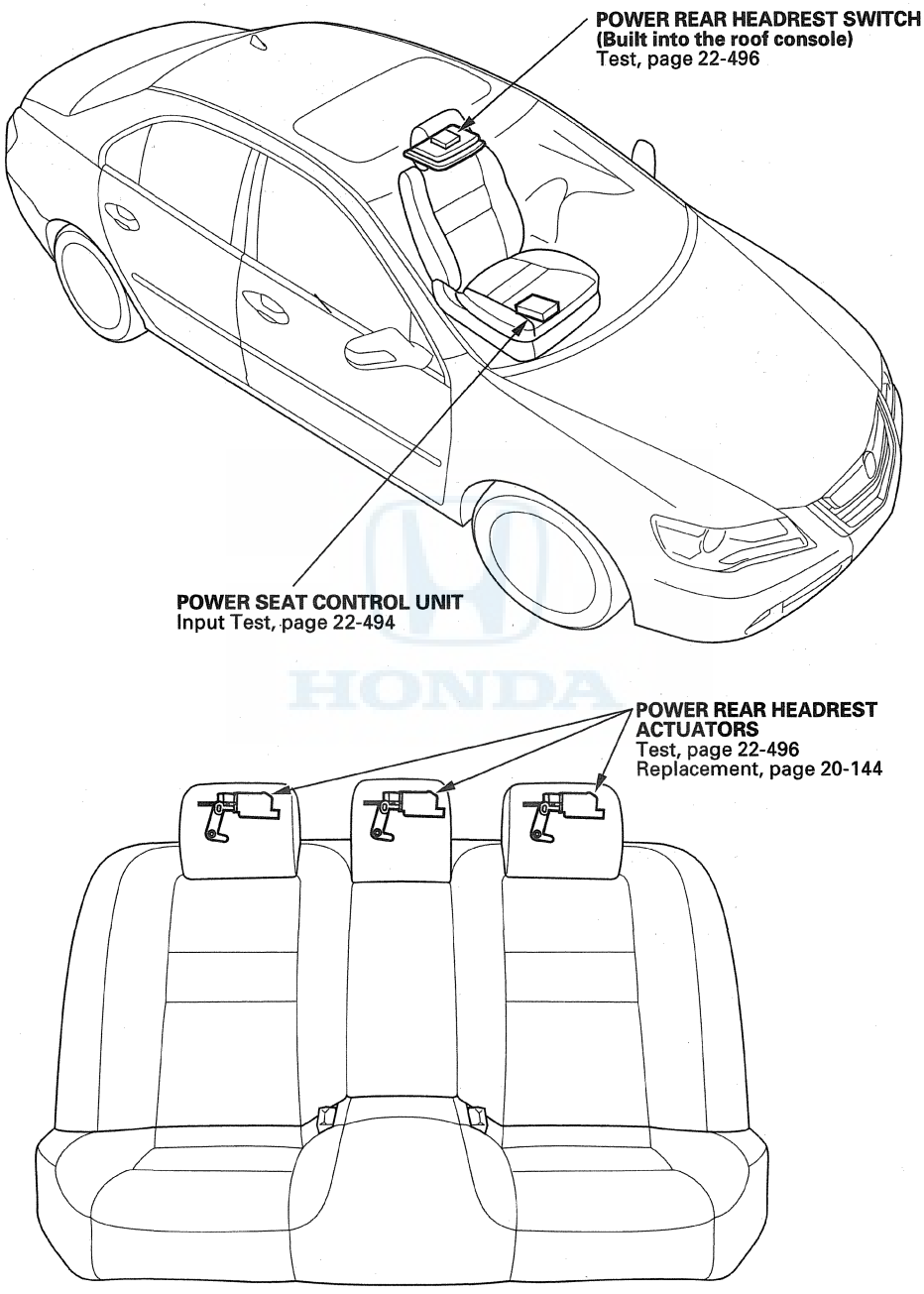

Circuit Diagram

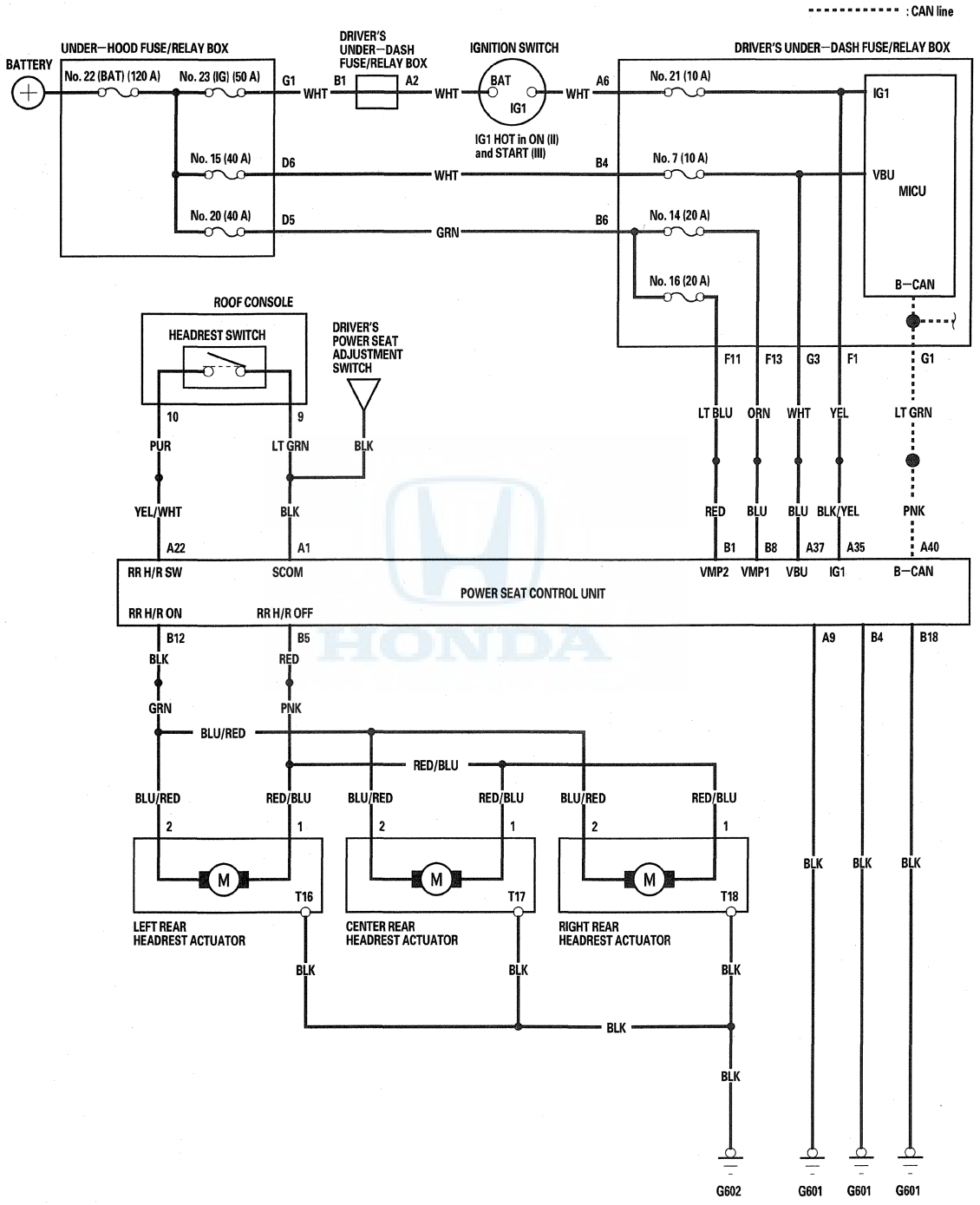

DTC Troubleshooting

DTC B1848: Rear Headrest Switch Signal Error

NOTE: If you are troubleshooting multiple DTCs, be sure to follow the instructions in B-CAN System Diagnosis Test Mode A (see page 22-131).

1. Clear the DTCs with the HDS.
2. Turn the ignition switch to LOCK (0), and then back ON (II).
3. Retract the rear headrests with the headrest switch.
4. Check for DTCs with the HDS.

   Is DTC B1848 indicated?

   YES—Go to step 5.

   NO—Intermittent failure, the system is OK at this time. Check for loose or poor connections. ■
5. Turn the ignition switch to LOCK (0).
6. Disconnect power seat control unit connector A (40P).
7. Disconnect the roof console 28P connector.
8. Check for continuity between body ground and power seat control unit connector A (40P) terminals No. 1 and No. 22 individually.

POWER SEAT CONTROL UNIT CONNECTOR A (40P)

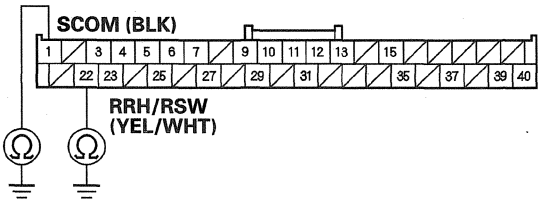

Wire side of female terminals

Is there continuity?

YES—Repair a short to ground in the wire. ■

NO—Go to step 9.

9. Check for continuity between power seat control unit connector A (40P) terminals No. 1 and No. 22.

POWER SEAT CONTROL UNIT CONNECTOR A (40P)

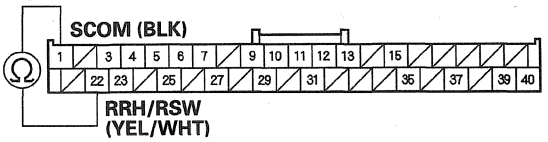

Wire side of female terminals

Is there continuity?

YES—Repair a short in the wire. ■

NO—Go to step 10.

10. Reconnect the roof console 28P connector.
11. Check for continuity between power seat control unit connector A (40P) terminals No. 1 and No. 22 without pressing the headrest switch.

POWER SEAT CONTROL UNIT CONNECTOR A (40P)

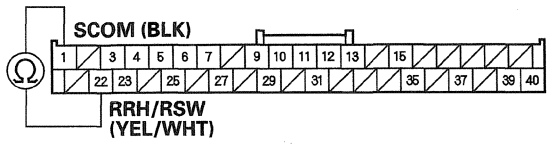

Wire side of female terminals

Is there continuity?

YES—Faulty headrest switch, replace the roof console (see page 22-307). ■

NO—Go to step 12.

12. Disconnect the roof console 28P connector.

13. Check for continuity between roof console 28P connector terminals.

    - No. 9 and No. 12
    - No. 10 and No. 12

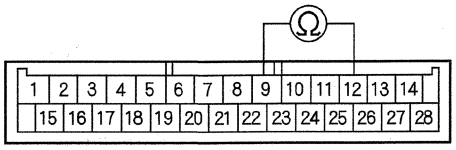

ROOF CONSOLE 28P CONNECTOR

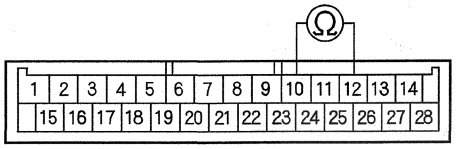

ROOF CONSOLE 28P CONNECTOR

Is there continuity?

YES—Faulty headrest switch, replace the roof console (see page 22-307). ■

NO—Go to the power seat control unit input test (see page 22-494). ■

Control Unit Input Test

1. Turn the ignition switch to LOCK (0).
2. Remove the mounting bolts from the driver's power seat (see page 20-114), and carefully tip the seat-back.

   NOTE: Be careful not to scratch the interior trim.
3. Disconnect the 40P connector (A) and 18P connector (B) from the power seat control unit (C).

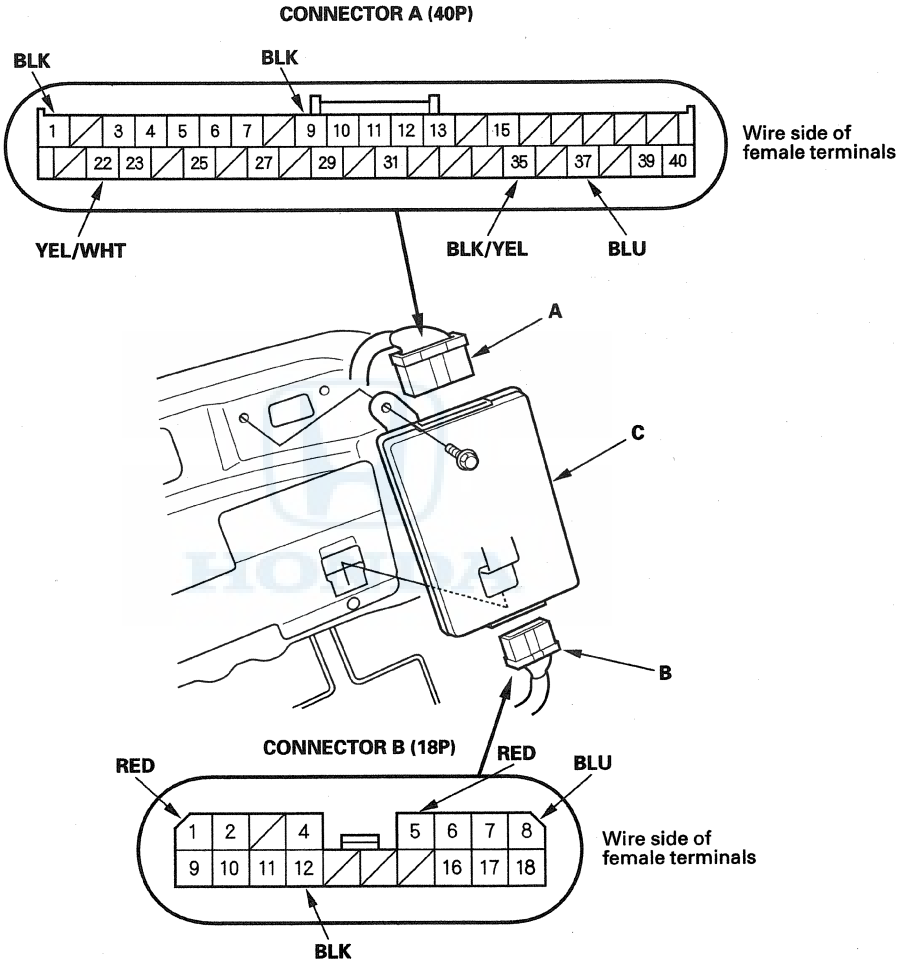

4. Inspect the connector and socket terminals to be sure they are all making good contact.

   - If the terminals are bent, loose or corroded, repair them as necessary, and recheck the system.
   - If the terminals look OK, go to step 5.

5. With the connectors still disconnected, do these input tests at the following connectors.

   • If any test indicates a problem, find and correct the cause, then recheck the system.
   • If all the input tests prove OK, go to step 6.

Cavity	Wire	Test condition	Test: Desired result	Possible cause if desired result is not obtained
A1 . A22	BLK . YEL/WHT	Headrest switch ON (pressed)	Check for continuity between terminals A1 and A22: There should be continuity.	• Faulty headrest switch • An open in the wire
		Headrest switch OFF (released)	Check for continuity between terminals A1 and A22: There should be no continuity.	• Faulty headrest switch • A short to ground in the wire
B12 . B5	BLK . RED	Under all conditions	Connect terminals B1 and B12, and terminals B5 and A9 momentarily: The headrest actuators should work.	• Faulty headrest actuator • An open in the wire

6. Reconnect connectors A (40P) and B (18P) to the control unit, and do these input tests at the following connectors.

   • If any tests indicate a problem, find and correct the cause, then recheck the system.
   • If all tests prove OK, the power seat control unit must be faulty; replace it.

Cavity	Wire	Test condition	Test: Desired result	Possible cause if desired result is not obtained
A9	BLK	Under all conditions	Measure the voltage to ground: There should be less than 0.2 V.	• Poor ground (G601) • An open in the wire
A35	BLK/YEL	Ignition switch ON (II)	Measure the voltage to ground: There should be battery voltage.	• Blown No. 21 (10 A) fuse in the driver's under-dash fuse/relay box • An open in the wire
A37	BLU	Under all conditions	Measure the voltage to ground: There should be battery voltage.	• Blown No. 15 (40 A) fuse in the under-hood fuse/relay box • Blown No. 7 (10 A) fuse in the driver's under-dash fuse/relay box • An open in the wire
B1	RED	Under all conditions	Measure the voltage to ground: There should be battery voltage.	• Blown No. 20 (40 A) fuse in the under-hood fuse/relay box • Blown No. 16 (20 A) fuse in the driver's under-dash fuse/relay box • An open in the wire
B8	BLU	Under all conditions	Measure the voltage to ground: There should be battery voltage.	• Blown No. 20 (40 A) fuse in the under-hood fuse/relay box • Blown No. 14 (20 A) fuse in the driver's under-dash fuse/relay box • An open in the wire

Power Rear Headrests

Headrest Switch Test

1. Remove the roof console (see page 22-307).
2. Disconnect the 28P connector (A) from the roof console (B).

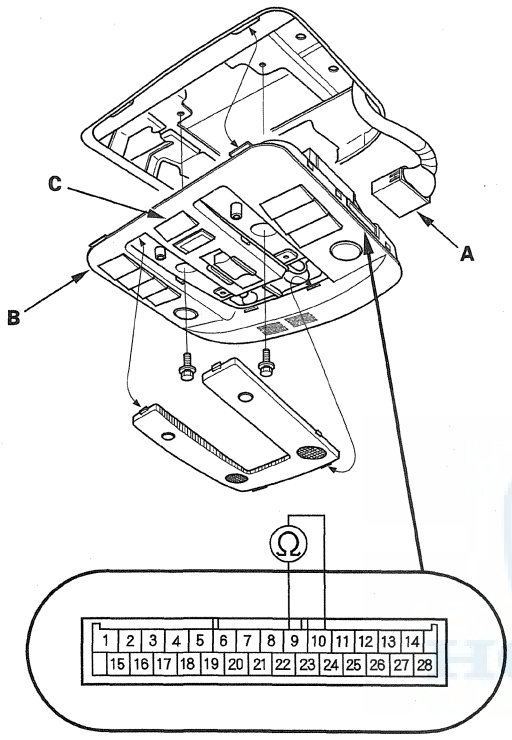

ROOF CONSOLE 28P CONNECTOR

3. Check for continuity between roof console 28P connector terminals No. 9 and No. 10.
   - There should be continuity when the headrest switch (C) is pressed.
   - There should be no continuity when the headrest switch is released.
4. If the continuity is not as specified, replace the roof console (see page 22-307).

Headrest Actuator Test

1. Remove the rear seat headrest covers (see page 20-148).
2. Disconnect the 2P connector (A) from the headrest actuator (B).

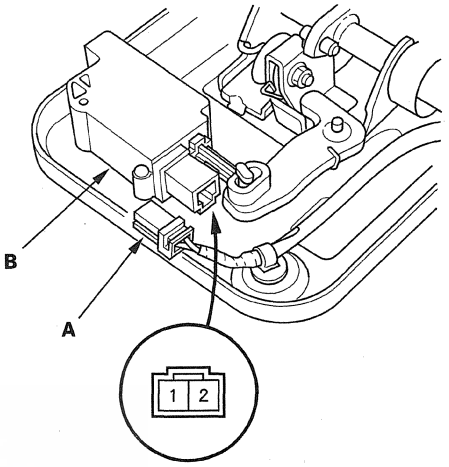

3. Check the actuator by connecting battery power to terminal No. 2 and ground terminal No. 1 momentarily. The actuator should work.
4. If the actuator does not work, replace the actuator.

Component Location Index

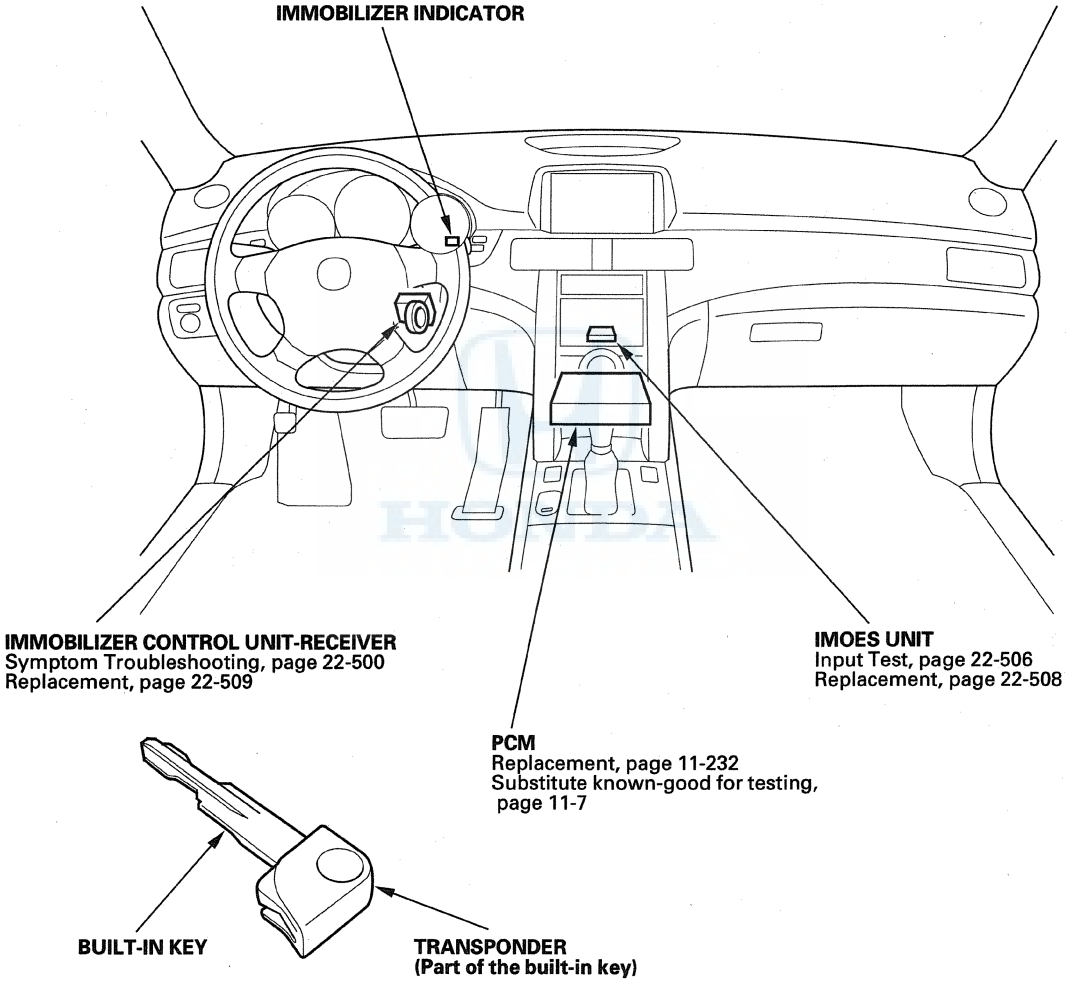

Immobilizer System

System Description

The immobilizer system prevents the engine from starting unless the proper keyless remote or built-in key is used. The immobilizer system consists of the immobilizer control unit-receiver, the keyless remote, the keyless access control unit, the transponder in the built-in key, the imoes unit, and the PCM.

When the built-in key is inserted in the ignition switch, and turned to the ON (II) position, the immobilizer control unit-receiver sends power to the transponder in the built-in key. The transponder then sends a coded signal back to the immobilizer control unit-receiver which then sends a coded signal to the PCM and the imoes unit. The PCM and the imoes unit identify this coded signal, then the fuel supply system is enabled.

When using the keyless remote, the remote sends a signal to the keyless access control unit. The keyless sends a coded signal to the imoes unit. The imoes unit determines if the correct code is used, and if so, the fuel supply system is enabled.

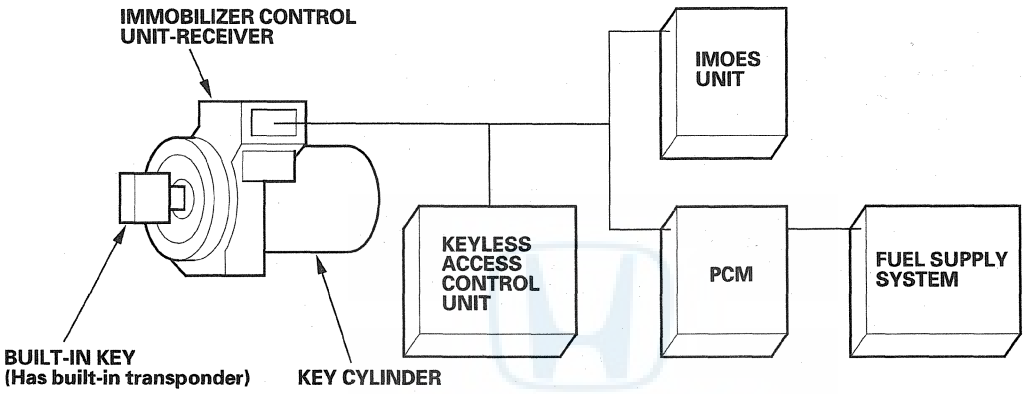

- If the proper key or remote is used, the immobilizer indicator comes on for about 2 seconds, then goes off. When the ignition switch is turned to LOCK (0), the indicator blinks for about 5 seconds to signal that the unit has reset correctly, then the indicator will go off.
- If the wrong key is used or the code was not received or recognized by the unit, the indicator comes on for about 2 seconds, then it blinks until the ignition switch is turned to LOCK (0).
- If the client has lost their keys and remotes, and cannot start the engine, contact Acura Client Services.

IMMOBILIZER INDICATOR LIGHTING PATTERN:

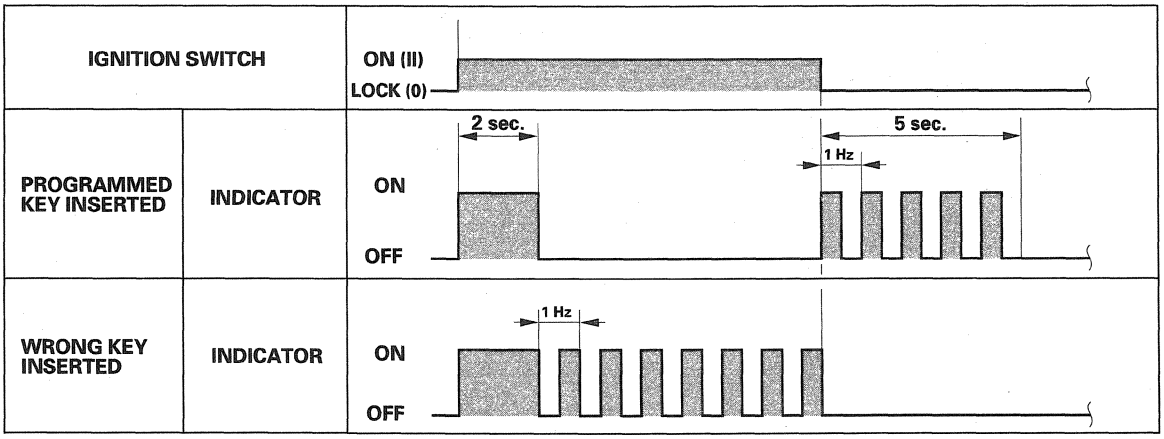

Circuit Diagram

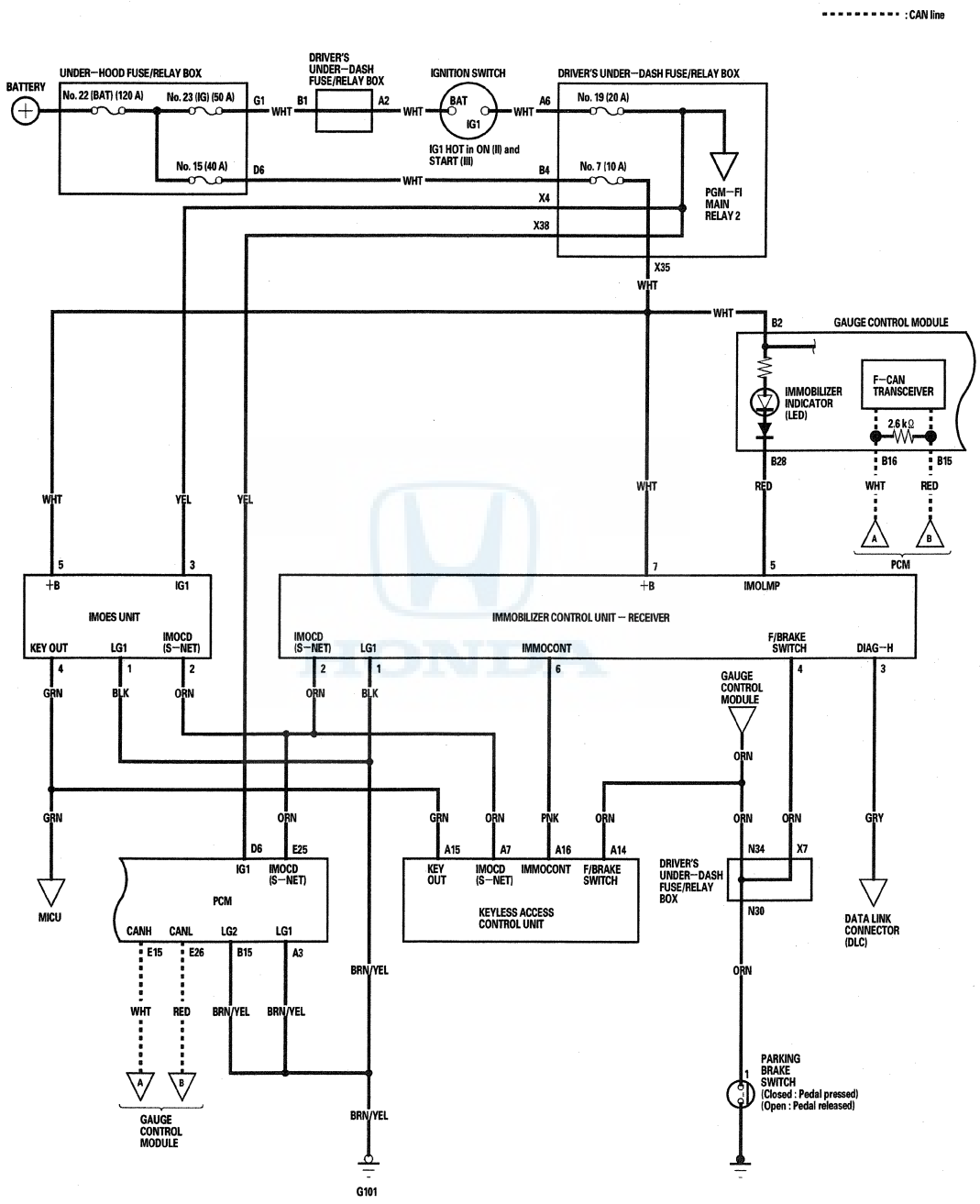

Symptom Troubleshooting Information

General Check before Troubleshooting

Before troubleshooting the immobilizer system, check the following general items and resolve then if applicable:

- The battery is low: Charge the battery fully, then troubleshoot the immobilizer system.
- The ignition key is not a genuine Acura part; use the Acura- approved key blank, register the key, then troubleshoot the immobilizer system.
- A key ring keys, or a key case is used; remove the key from it, and troubleshoot the immobilizer system with the key only.
- An aftermarket electrical part is installed; remove it, then troubleshoot the immobilizer system.

Symptom Troubleshooting Using the Immobilizer Indicator Lighting Pattern

NOTE: When symptom troubleshooting the immobilizer system, the built-in key must be in the ignition switch.

The pattern of the immobilizer indicator can help troubleshooting the condition of the immobilizer system and the keyless access system. Here are descriptions of the five possible patterns:

Normal operation
When the ignition switch is turned to ON (II), and the immobilizer code is identified, the immobilizer indicator comes on for 2 seconds, then goes off.
The immobilizer indicator blinks five times when the ignition switch is turned to LOCK (0).

+B line open
When the ignition switch is turned to ON (II), and the immobilizer code is identified, the immobilizer indicator comes on for 2 seconds, then goes off.
The immobilizer indicator goes off when the ignition switch is turned to LOCK (0).

Immobilizer code is not identified
When the ignition switch is turned to ON (II) but the immobilizer code is not identified, the immobilizer indicator comes on for 2 seconds, then blinks until the ignition switch is turned to LOCK (0). The state of the immobilizer key registration and the IMOCD line can be checked by doing a SYSTEM CHECK with the HDS. Also check the STATUS LOG, and diagnose the line with the highest count first.
The immobilizer indicator goes off when the ignition switch is turned to LOCK (0).

Immobilizer indicator does not come on
If the immobilizer indicator does not come on when the ignition switch is turned to ON (II), check for an open in the wire shown:

When the built-in key is used:

- Check for continuity between the immobilizer control unit-receiver, keyless access control unit, and imoes unit (IMOCD line).
- Measure the voltage to the immobilizer control unit-receiver IG1 and +B line.
- Check for continuity between the immobilizer control unit-receiver and the gauge control module (IMOLMP line).

When the keyless access FOB is used:

- Measure the voltage to the keyless access control unit IG1 and IG2, +B1, +B2, and ACC lines.
- Check for continuity between the keyless access control unit and the gauge control module (IMOLMP line).
- Check for continuity between the keyless access control unit and body ground (LG1 and LG2).
- Check for continuity between the keyless access control unit, immobilizer control unit-receiver, and imoes unit (IMOCD line).

Immobilizer indicator does not go off
If the immobilizer indicator does not go off after the ignition switch is turned to ON (II), check for a short to ground in the immobilizer circuit between the gauge control module and immobilizer control unit-receiver.

Symptom Troubleshooting Using Malfunctioning Circuit Functions

If a malfunction occurs in the immobilizer circuit, use the following table to cross-reference the malfunctioning function to the line(s) that should be checked:

Line error / Function	+B1 line open	IG1 line open	GND (LG1) line open	IMOCD (S-NET) line open	Immobilizer indicator line open	Immobilizer indicator line short
Immobilizer Indicator	No blinking when ignition switch is in LOCK (0)	Does not come on	Does not come on	Blinking	Does not come on	Does not go off
Engine start	Possible	Impossible	Impossible	Impossible	Possible	Possible
Key registration	Impossible	Impossible	Impossible	Impossible	Possible	Possible
Tester communication	Possible	Impossible	Impossible	Possible	Possible	Possible

System Check and Status Log

NOTE: The HDS can be used to:

- Check the state of the immobilizer key registration and the IMOCD line by doing a SYSTEM CHECK.
- Check the number of times the immobilizer control unit-receiver doesn't permit the engine to run by checking the STATUS LOG.

1. Connect the HDS to the data link connector, then turn the ignition switch to ON (II), and follow the prompts to the MAIN MENU.

   NOTE: If the HDS does not communicate with the vehicle, go to the DLC circuit troubleshooting (see page 11-211).

2. At the MAIN MENU, enter IMMOBI, then select the IMMOBILIZER SET UP.

3. Do the SYSTEM CHECK. If there is a system check number, do the troubleshooting for the item indicated.

4. Check the STATUS LOG using the HDS. Troubleshoot the line with the highest counts first (see page 22-503). If all the lines are "0" zero, the problem may not be caused by the immobilizer system. Check for ignition or fuel problems.

   NOTE: Once repaired, clear the status log by removing the No. 7 (10 A) fuse in the driver's under-dash fuse/relay box.

System Check

1. Connect the HDS to the data link connector.
2. Turn the ignition switch to ON (II).
3. Monitor the SYSTEM CHECK in the IMMOBILIZER INFO with the HDS.
4. If the HDS displays NORMAL N-1, the immobilizer system is OK at this time, refer to the STATUS LOG. If the HDS displays any other messages, check as follows:

System Check No.	Status Log Indication	System Check	Possible Cause
A-1	Possible	The key is not registered	• This key is not registered in the immobilizer control unit-receiver. Try to register keys using the HDS. • No communication between the antenna and immobilizer key because of interference from metal such as key chains/key rings/other keys. • Low battery voltage.
A-2	Possible	Communication error between the key and immobilizer unit	• Intermittent interruption between the transponder and immobilizer control unit-receiver. • The immobilizer key type is incorrect non-Acura key. • Key failure (transponder failure) • No communication between the antenna and immobilizer key because of interference from metal such as key chains/key rings/other keys. • Low battery voltage.
A-3	Possible	No communication between the key and immobilizer unit	• The ignition switch was turned to ON (II) with a non-immobilizer key. • The immobilizer key type is incorrect non-Acura key. • Key failure (transponder failure) • No communication between the antenna and immobilizer key because of interference from metal such as key chains/key rings/other keys. • Low battery voltage. • Immobilizer control unit-receiver failure
B-1	Possible	The PCM is not registered	• The PCM was not registered. Try to register the PCM using the HDS. • No communication between the PCM and the immobilizer control unit-receiver because of low battery voltage. • No communication between the immobilizer control unit-receiver and PCM because of interference. • Open in the IG1 line
B-2	Possible	Error of communication format in PCM	• The PCM was not registered. Try to register the PCM using the HDS. • No communication between the PCM and immobilizer control unit-receiver because of low battery voltage. • No communication between the immobilizer control unit-receiver and PCM because of interference.

Status Log

If you suspect there is an immobilizer system problem, check the status log in the HDS.

1. Connect the HDS to the data link connector.
2. Turn the ignition switch to ON (II).
3. On the HDS screen, at MAIN MENU, enter IMMOBI, then select IMMOBILIZER SETUP, select System Check, Number of Keys, and Status Log, then select STATUS LOG.
4. Check the Status Log count. Troubleshoot the status with the highest count first. If no counts are listed, the immobilizer system is OK. Continue with normal symptom troubleshooting.

Status Log No.	Detected Item	Probable Cause
A-1	KEY CODE MISMATCH (Code format normal, but code data is mismatch)	• The key was not registered • Interference from metal such as key chains • Low battery voltage
A-2	KEY CODE MISMATCH (Code format failure)	• Ignition switch was turned to ON (II) with another type of immobilizer key or aftermarket key • Interference from metal such as key chains • Low battery voltage
A-3	KEY CODE MISMATCH (No key code or non-immobilizer key)	• Ignition switch was turned to ON (II) with another type of immobilizer key or aftermarket key • Interference from metal such as key chains • Low battery voltage • Key failure • Immobilizer control unit-receiver failure
B-1	PCM CODE MISMATCH (Code format normal, but code data is mismatch)	• PCM was not registered correctly • Low battery voltage • Poor or loose terminal connections at the immobilizer control unit-receiver • Communication line electrical noise
B-2	PCM MISMATCH (Code format failure)	• PCM was not registered correctly • Low battery voltage • Poor or loose terminal connections at the immobilizer control unit-receiver • Communication line electrical noise
C-1	IMOES UNIT MISMATCH (Code format normal, but data is mismatch)	• Imoes unit was not registered • The communication was not good between Imoes unit and immobilizer control unit-receiver by battery voltage low • The communication was not good between Imoes unit and immobilizer control unit-receiver by influence of some noise
C-2	IMOES UNIT MISMATCH (Code format failure)	• Imoes unit was not registered correctly • The communication was not good between Imoes unit and immobilizer control unit-receiver by battery voltage low • The communication was not good between Imoes unit and immobilizer control unit-receiver by influence of some noise
D-1	IMOCD (S-NET) LINE PROBLEM (Short to ground)	• Low battery voltage • Poor or loose terminal connections at the immobilizer control unit-receiver and the PCM • Communication line electrical noise
D-2	IMOCD (S-NET) LINE PROBLEM (No communication)	• Blown fuse • Harness open from Imoes unit to immobilizer control unit-receiver • The communication was not good between Imoes unit and immobilizer control unit-receiver by battery voltage low • The communication was not good between Imoes unit and immobilizer control unit-receiver by influence of some noise • Imoes unit failure • Immobilize control unit-receiver failure
D-3	IMOCD (S-NET) LINE PROBLEM (Open line or PCM failure)	• Open or short in the harness from the PCM to the immobilizer control unit-receiver • Low battery voltage • Poor or loose terminal connections at the immobilizer control unit-receiver and the PCM • Communication line electrical noise

(cont'd)

Status Log (cont'd)

System Check No.	Status Log Indication	System Check	Possible Cause
C-1	Possible	The Imoes unit is not registered	• Imoes unit was not registered. • No communication between the Imoes unit and immobilizer control unit-receiver because of low battery voltage. • No communication between the Imoes unit and immobilizer control unit-receiver because of interference. • Try to register the Imoes unit with the HDS.
C-2	Possible	Error of communication format in Imoes unit	• Imoes unit was not registered. • No communication between the Imoes unit and immobilizer control unit-receiver because of low battery voltage. • No communication between the Imoes unit and immobilizer control unit-receiver because of interference. • Try to register the Imoes unit with the HDS.
D-1	Possible	S-NET line short	• Harness short from the PCM to the immobilizer control unit-receiver. (IMOCD (S-NET) line short) • No communication between the PCM and immobilizer control unit-receiver because of low battery voltage. • No communication between the immobilizer control unit-receiver and PCM because of interference. • Immobilizer control unit-receiver failure • PCM failure
D-2	Possible	No communication between imoes unit and immobilizer control unit-receiver	• Blown fuse • Harness open from the Imoes unit to the immobilizer control unit-receiver. (IMOCD (S-NET) line open) • No communication between the Imoes unit and immobilizer control unit-receiver because of low battery voltage. • No communication between the Imoes unit and immobilizer control unit-receiver because of interference. • Immobilizer control unit-receiver failure • Imoes unit failure
D-3	Possible	No communication between PCM and immobilizer control unit-receiver	• Blown fuse • Harness open from the PCM to the immobilizer control unit-receiver. • No communication between the PCM and immobilizer control unit-receiver because of low battery voltage. • No communication between the immobilizer control unit-receiver and PCM because of interference. • Immobilizer control unit-receiver failure • PCM failure
E-1 E-2 E-3 E-4 E-5	———	Initial registration of immobilizer control unit-receiver is not completed	The immobilizer control unit-receiver is not registered. Try to register the immobilizer control unit-receiver using the HDS.
F-1 F-2 F-3 F-4 F-5	———	Special Mode	Turn the ignition switch to ON (II) and to LOCK (0) with the registered key.

Symptom Troubleshooting

Engine does not start with the built-in key

NOTE: Before troubleshooting, check the following general items:
- If there is a keyless access system symptom, troubleshoot the keyless access system first.
- The battery voltage is low; charge the battery fully, then troubleshoot the immobilizer system.
- The ignition key is not a genuine Acura part; use the Acura approved key blank, register the key, then troubleshoot the immobilizer system.
- A key ring, keys, or a key case is being used; remove the key from it, and troubleshoot the immobilizer system with only a key.
- An aftermarket electrical part is attached; remove it, then troubleshoot the immobilizer system.

1. Try to start the engine with the built-in key.

   Does the engine start?

   YES—Refer to the Status Log (see page 22-503). ■

   NO—Go to step 2.

2. With the HDS, check the immobilizer system check results.

   Is a result listed?

   YES—Check the items in the System Check table (see page 22-502). ■

   NO—Go to step 3.

3. Check the immobilizer indicator operation.

   Does the immobilizer indicator work normally?

   YES—The immobilizer system is OK at this time. Refer to the Fuel and Emissions System's Symptom Troubleshooting. ■

   NO—Go to Symptom Troubleshooting by the Immobilizer Indicator Lighting Pattern (see page 22-500). ■

Imoes Unit Input Test

1. Remove the audio unit (see page 23-106).
2. Remove the passenger's front console cover (see step 5 on page 20-93).

   NOTE: If necessary, remove the glove box (see page 20-103) to make a space to see the imoes unit from the front passenger's side.

3. Disconnect the 5P connector (A) from the imoes unit (B).

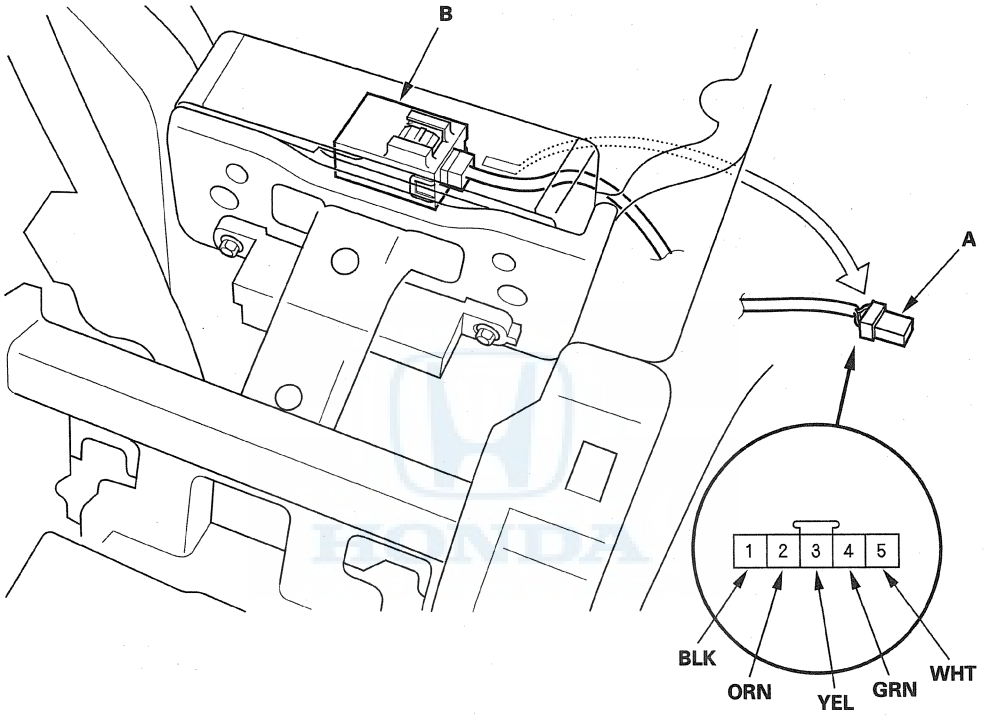

4. Inspect the connector and socket terminals to be sure they are all making good contact.

   - If the terminals are bent, loose or corroded, repair them as necessary and recheck the system.
   - If the terminals look OK, go to step 5.

5. With the connector still disconnected, make these input tests at the following connector.
   - If any test indicates a problem, find and correct the cause, then recheck the system.
   - If all the input tests prove OK, go to step 6.

Cavity	Wire	Test condition	Test: Desired result	Possible cause if desired result is not obtained
2	ORN (IMOCD (S-NET))	Disconnect: • PCM connector E (31P) • Immobilizer control unit-receiver 7P connector • Keyless Access control unit connector A (31P)	Measure the voltage on the circuit: There should be to no voltage.	Short to power in the wire
			Check for continuity to ground: There should be to no continuity.	Short to ground in the wire
			Check for continuity between terminal No.2 and PCM connector E (31P) terminal No. 25: There should be continuity.	An open in the wire
			Check for continuity between terminal No.2 and immobilizer control unit-receiver 7P connector terminal No. 2: There should be continuity.	
			Check for continuity between terminal No.2 and keyless access control unit connector A (31P) terminal No. 7: There should be continuity.	

6. Reconnect the connector to the unit, turn the ignition switch to ON (II), and do these input tests at the following connector.
   - If any test indicates a problem, find and correct the cause, then recheck the system.
   - If all the input tests prove OK, replace the imoes unit (see page 22-508).

Cavity	Wire	Test condition	Test: Desired result	Possible cause if desired result is not obtained
1	BLK (LG1)	Under all conditions	Measure the voltage to ground: There should be less than 0.2 V.	• Poor ground (G101) • An open in the wire
3	YEL (IG1)	Ignition switch ON (II)	Measure the voltage to ground: There should be battery voltage.	• Blown No. 19 (20 A) fuse in the driver's under- dash fuse/relay box • An open in the wire
4	GRN (KEY OUT)	Built-in key is in the ignition switch	Measure the voltage to ground: There should be less than 0.2 V.	• Faulty ignition switch control unit • An open in the wire
		Built-in key is removed from the ignition switch	Measure the voltage to ground: There should be battery voltage.	• Faulty ignition switch control unit • A short to ground in the wire
5	WHT (VBU+B)	Under all conditions	Measure the voltage to ground: There should be battery voltage.	• Blown No. 15 (40 A) fuse in the under-hood fuse/relay box • Blown No. 7 (10 A) fuse in the driver's under-dash fuse/relay box • An open in the wire

Imoes Unit Replacement

1. Remove the dashboard/steering hanger beam (see page 20-109).
2. Disconnect the 5P connector (A) from the imoes unit (B), then remove the imoes unit.

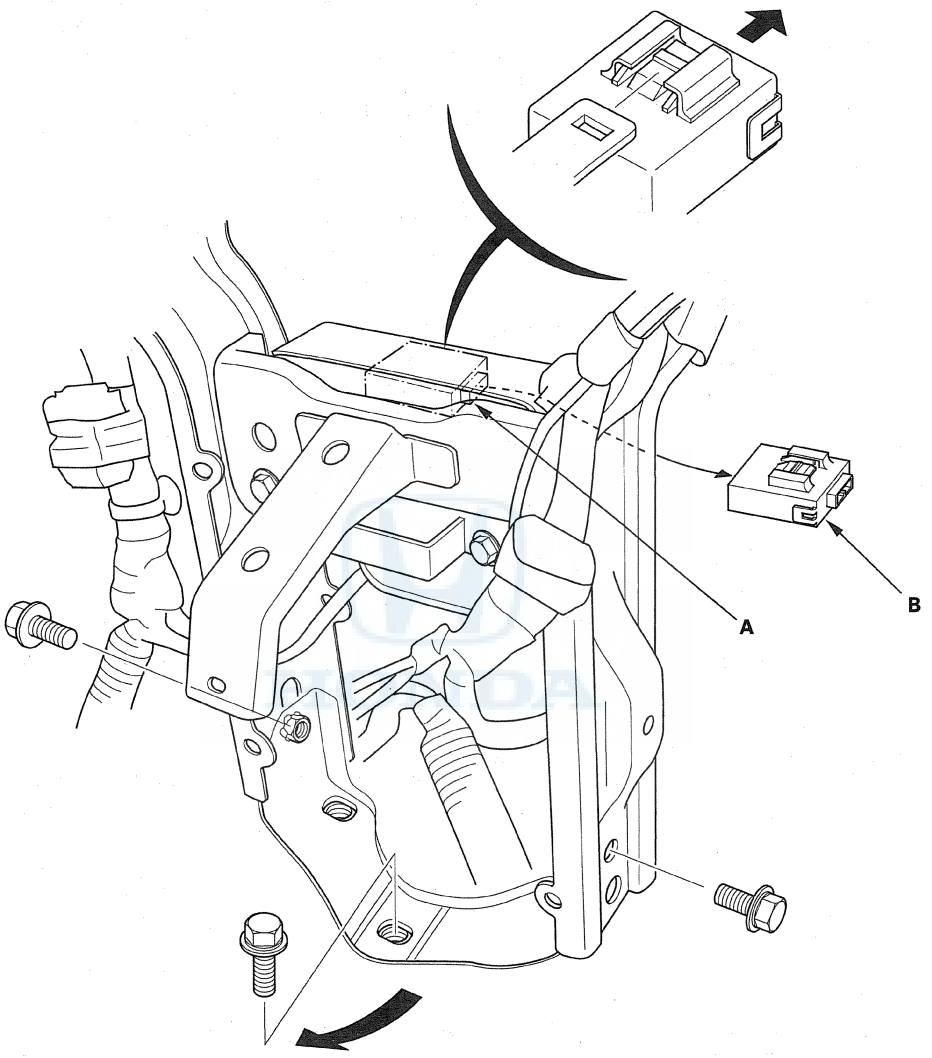

3. Install the parts in the reverse order of removal.
4. After replacement, the immobilizer system must be registered in IMMOBILIZER with the HDS (see page 22-7).

Immobilizer Control Unit-Receiver Replacement

1. Remove the driver's dashboard undercover (see page 20-100), and the driver's dashboard lower cover (see page 20-100).
2. Remove the steering column covers (see step 5 on page 17-25).
3. Remove the ignition switch knob (see page 22-628).
4. Disconnect the 7P connector (A) from the immobilizer control unit-receiver (B).

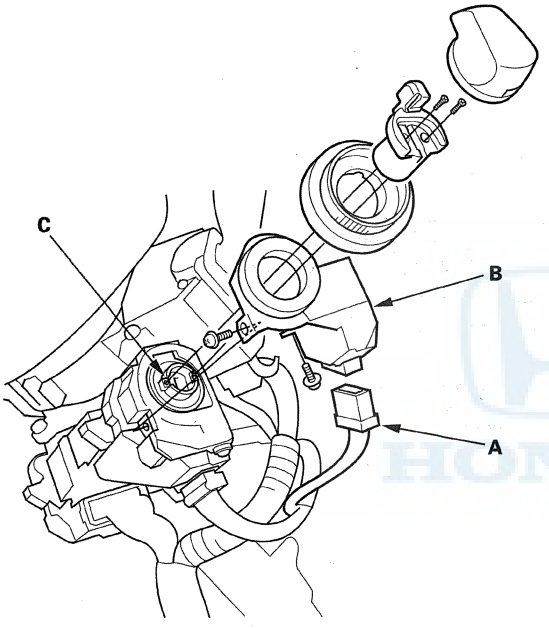

5. Remove the two screws and the immobilizer control unit-receiver from the ignition key cylinder (C).
6. Install the immobilizer control unit-receiver in the reverse order of removal.
7. After replacement, the immobilizer control unit-receiver must be registered in IMMOBILIZER with the HDS (all keys and the PCM code are required) (see page 22-7).

Driving Position Memory System (DPMS)

Component Location Index

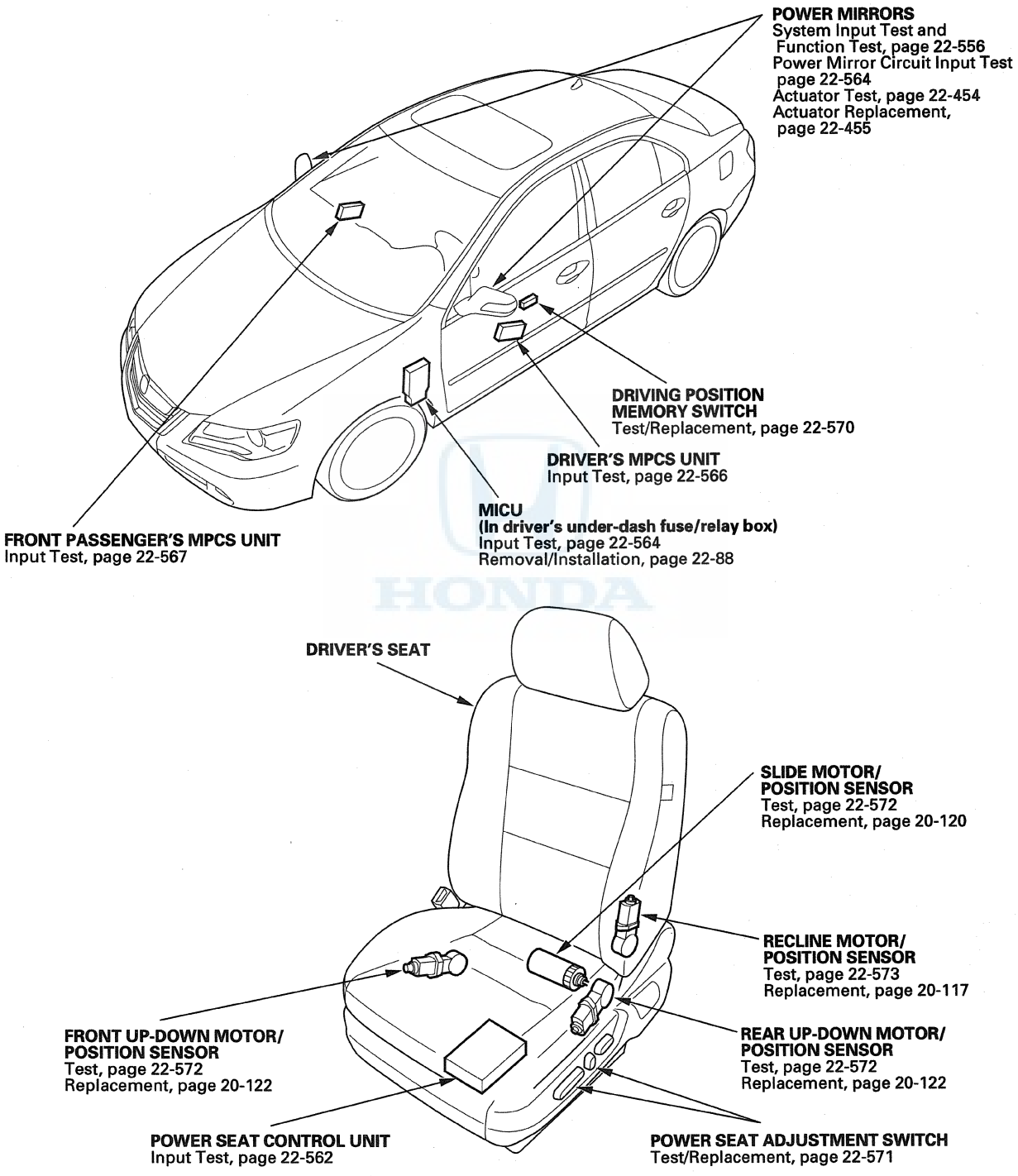

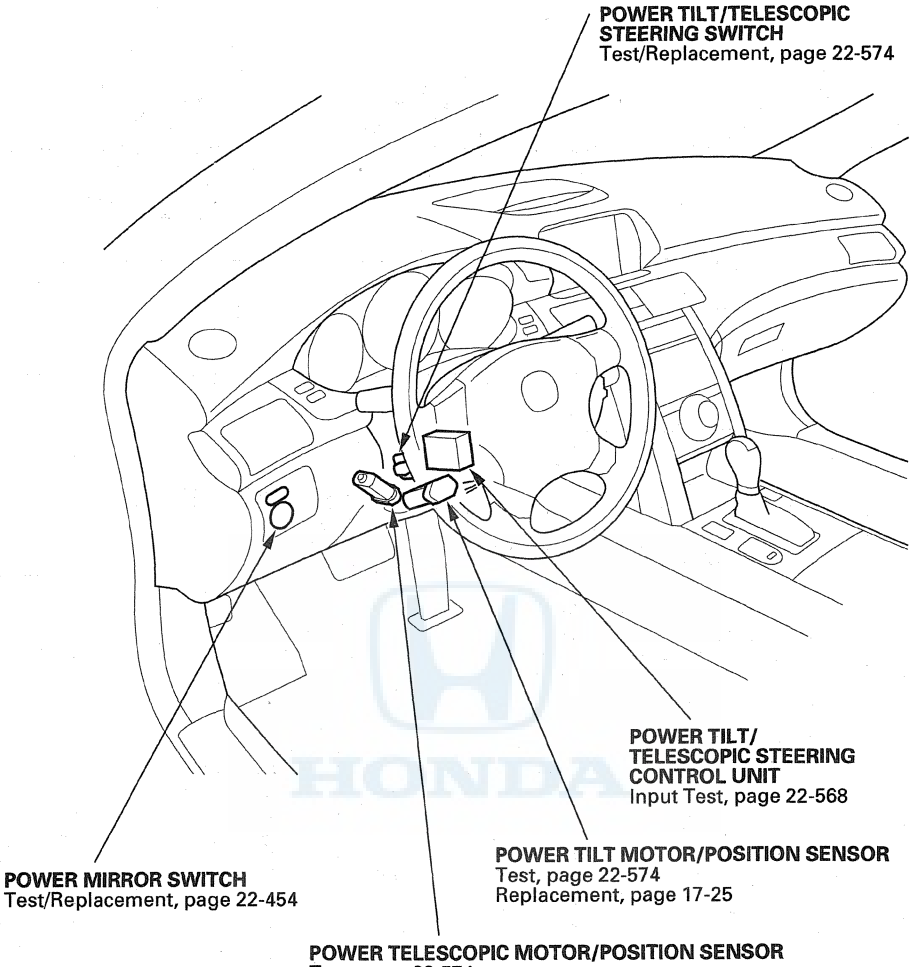
POWER TILT/TELESCOPIC STEERING SWITCH
Test/Replacement, page 22-574
POWER TILT/ TELESCOPIC STEERING CONTROL UNIT
Input Test, page 22-568
POWER TILT MOTOR/POSITION SENSOR
Test, page 22-574
Replacement, page 17-25
POWER MIRROR SWITCH
Test/Replacement, page 22-454
POWER TELESCOPIC MOTOR/POSITION SENSOR
Test, page 22-574
Replacement, page 17-25

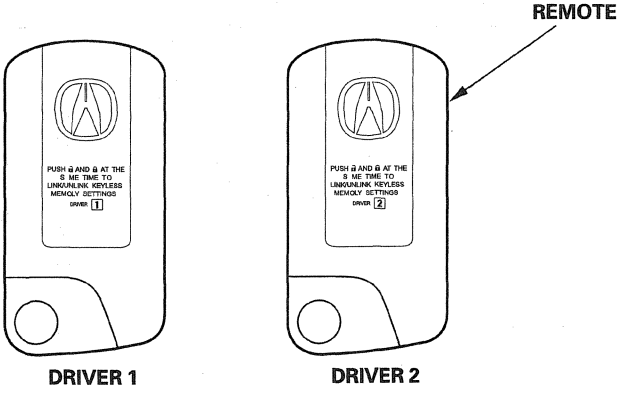
REMOTE
DRIVER 1
DRIVER 2

Driving Position Memory System (DPMS)

Circuit Diagram - Power Seat

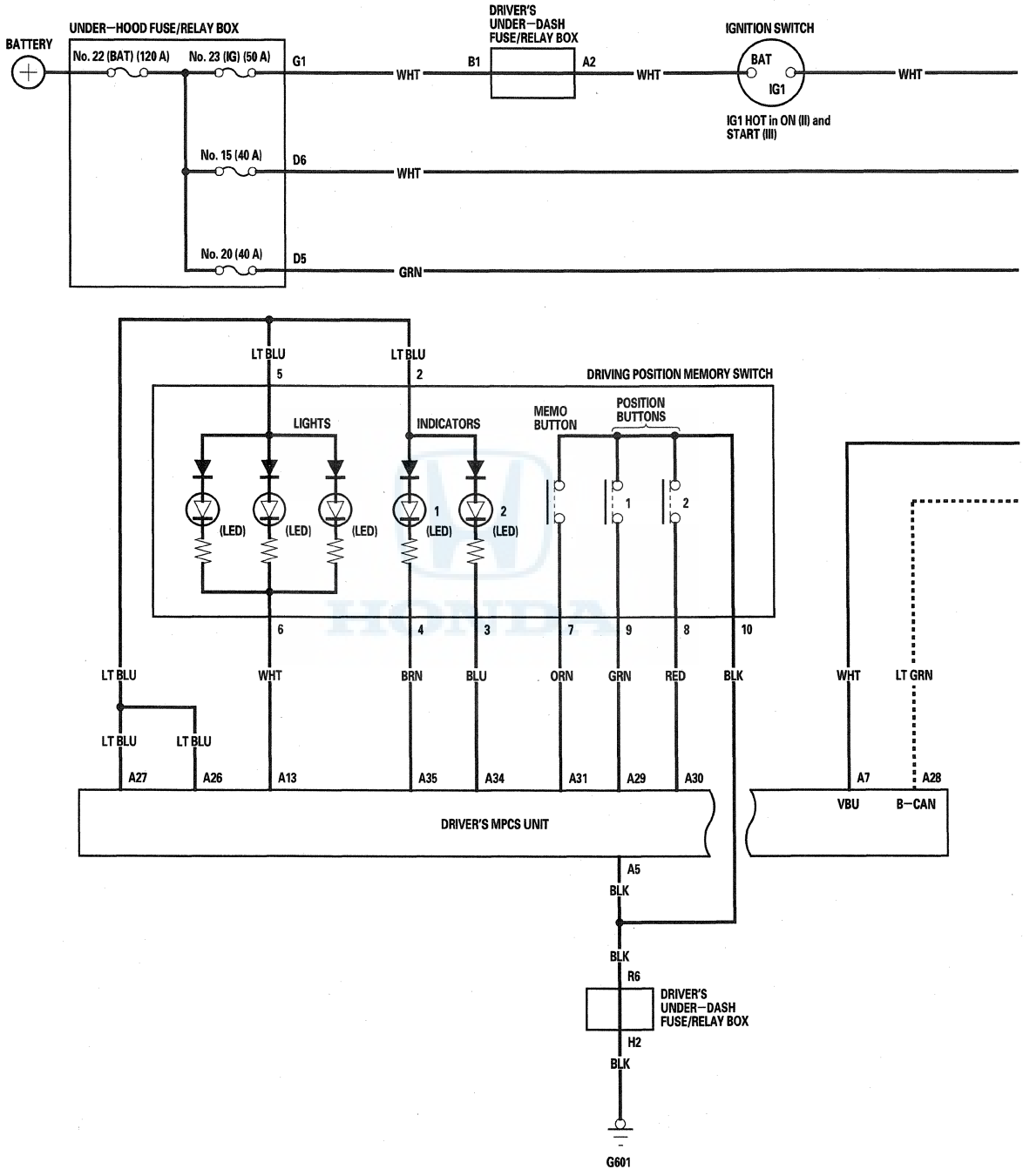

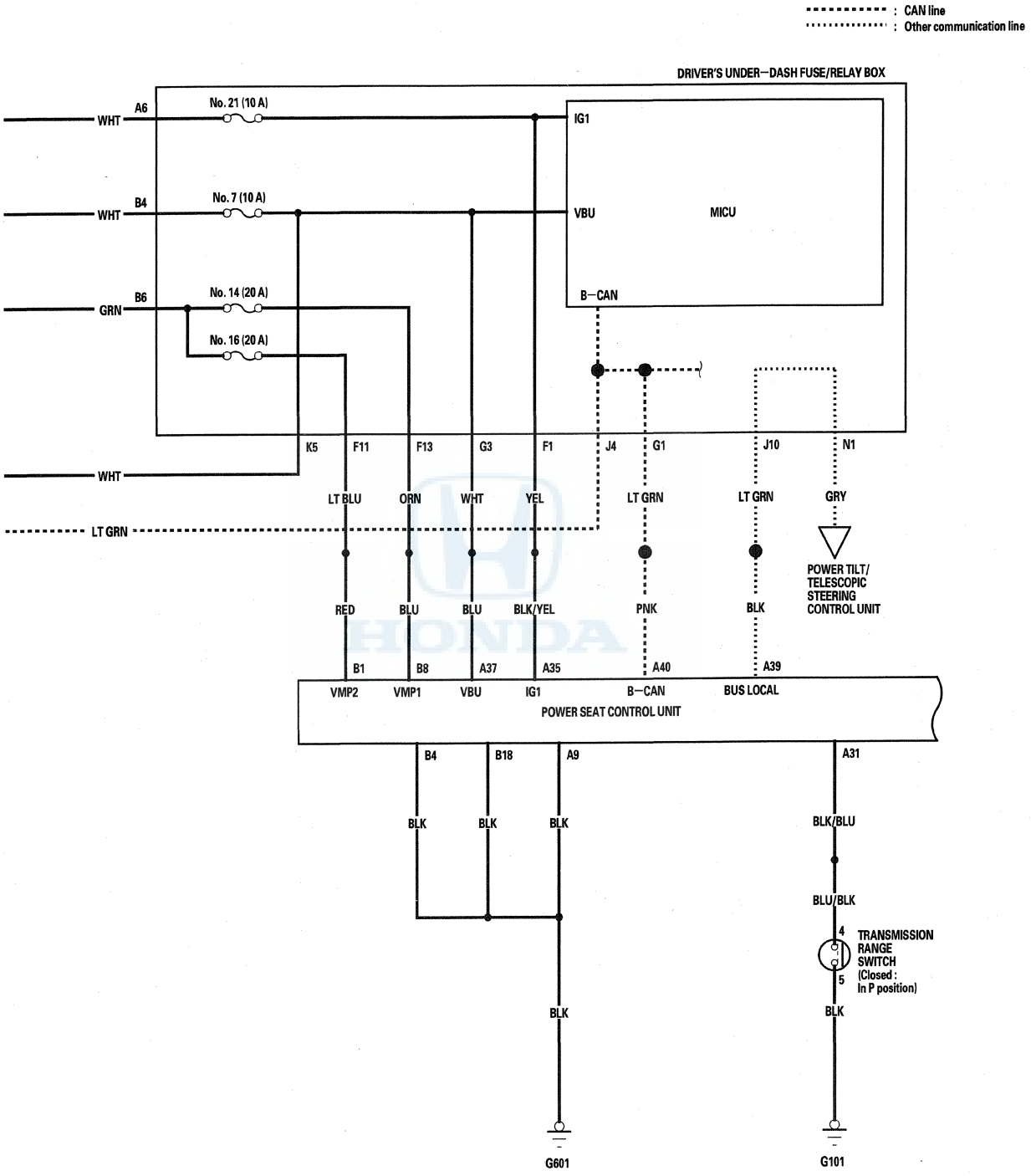
: CAN line
: Other communication line
DRIVER'S UNDER-DASH FUSE/RELAY BOX
A6
WHT
No. 21 (10 A)
IG1
B4
WHT
No. 7 (10 A)
VBU
MICU
B6
GRN
No. 14 (20 A)
B-CAN
No. 16 (20 A)
K5
F11
F13
G3
F1
J4
G1
J10
N1
WHT
LT BLU
ORN
WHT
YEL
LT GRN
LT GRN
GRY
LT GRN
POWER TILT/ TELESCOPIC STEERING CONTROL UNIT
RED
BLU
BLU
BLK/YEL
PNK
BLK
B1
B8
A37
A35
A40
A39
VMP2
VMP1
VBU
IG1
B-CAN
BUS LOCAL
POWER SEAT CONTROL UNIT
B4
B18
A9
A31
BLK
BLK
BLK
BLK/BLU
BLU/BLK
4
5
TRANSMISSION RANGE SWITCH (Closed : In P position)
BLK
BLK
G601
G101

(cont'd)

Circuit Diagram - Power Seat (cont'd)

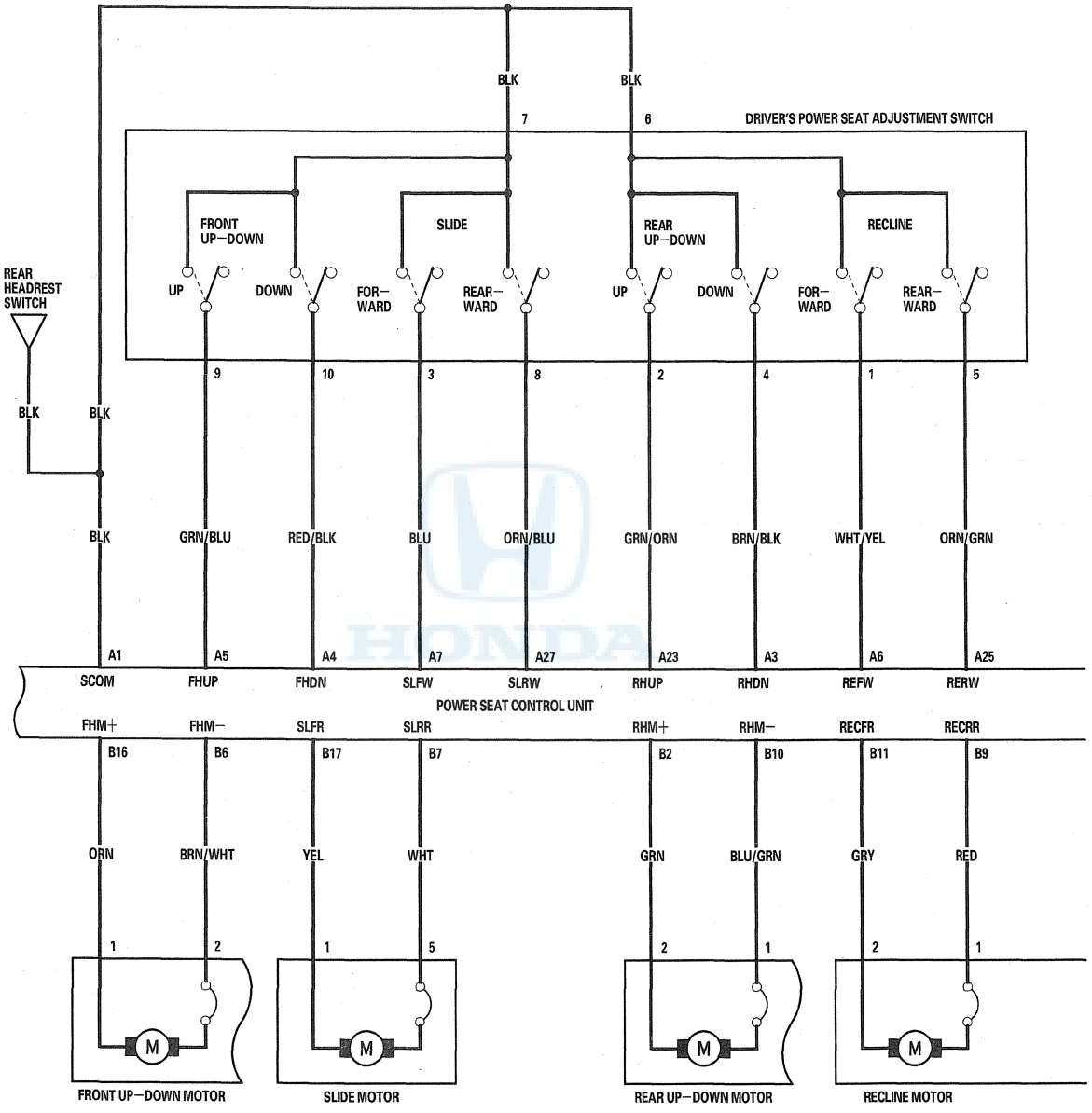

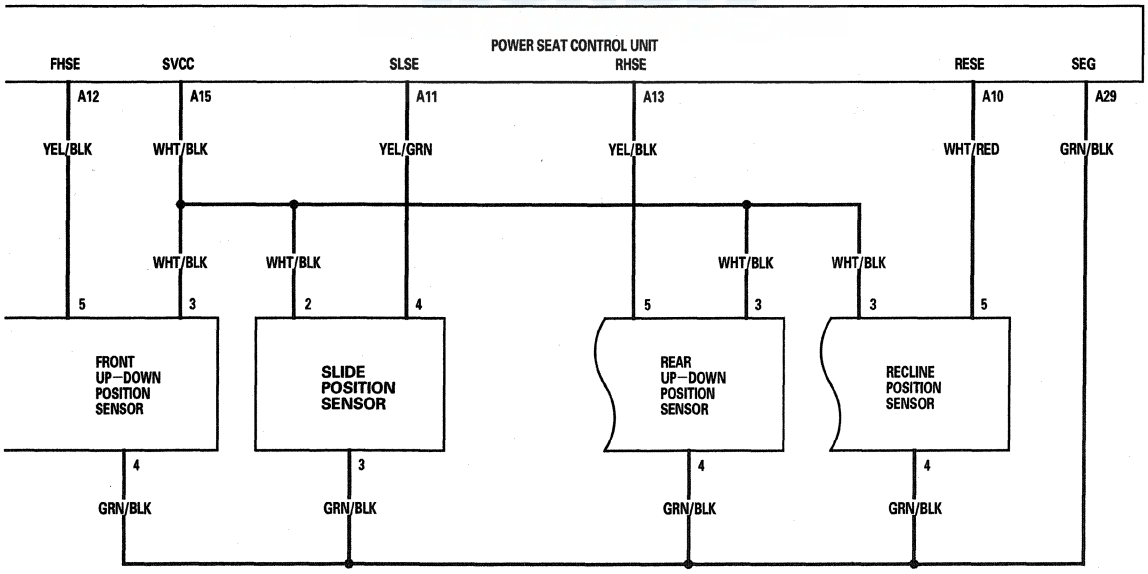
POWER SEAT CONTROL UNIT
FHSE
SVCC
SLSE
RHSE
RESE
SEG
A12
A15
A11
A13
A10
A29
YEL/BLK
WHT/BLK
YEL/GRN
YEL/BLK
WHT/RED
GRN/BLK
WHT/BLK
WHT/BLK
WHT/BLK
WHT/BLK
5
3
2
4
5
3
3
5
FRONT UP—DOWN POSITION SENSOR
SLIDE POSITION SENSOR
REAR UP—DOWN POSITION SENSOR
RECLINE POSITION SENSOR
4
3
4
4
GRN/BLK
GRN/BLK
GRN/BLK
GRN/BLK

Driving Position Memory System (DPMS)

Circuit Diagram - Power Mirror

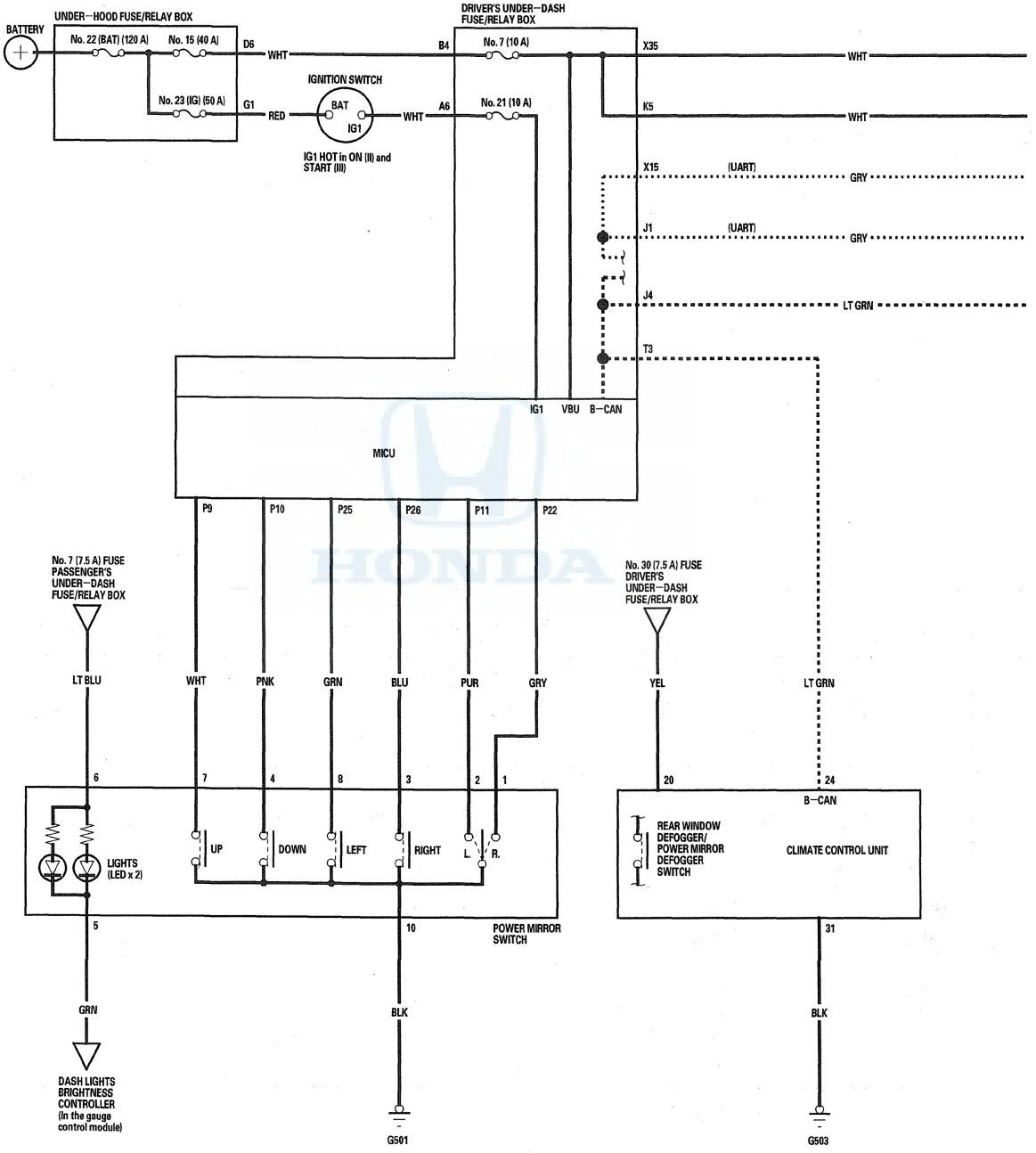

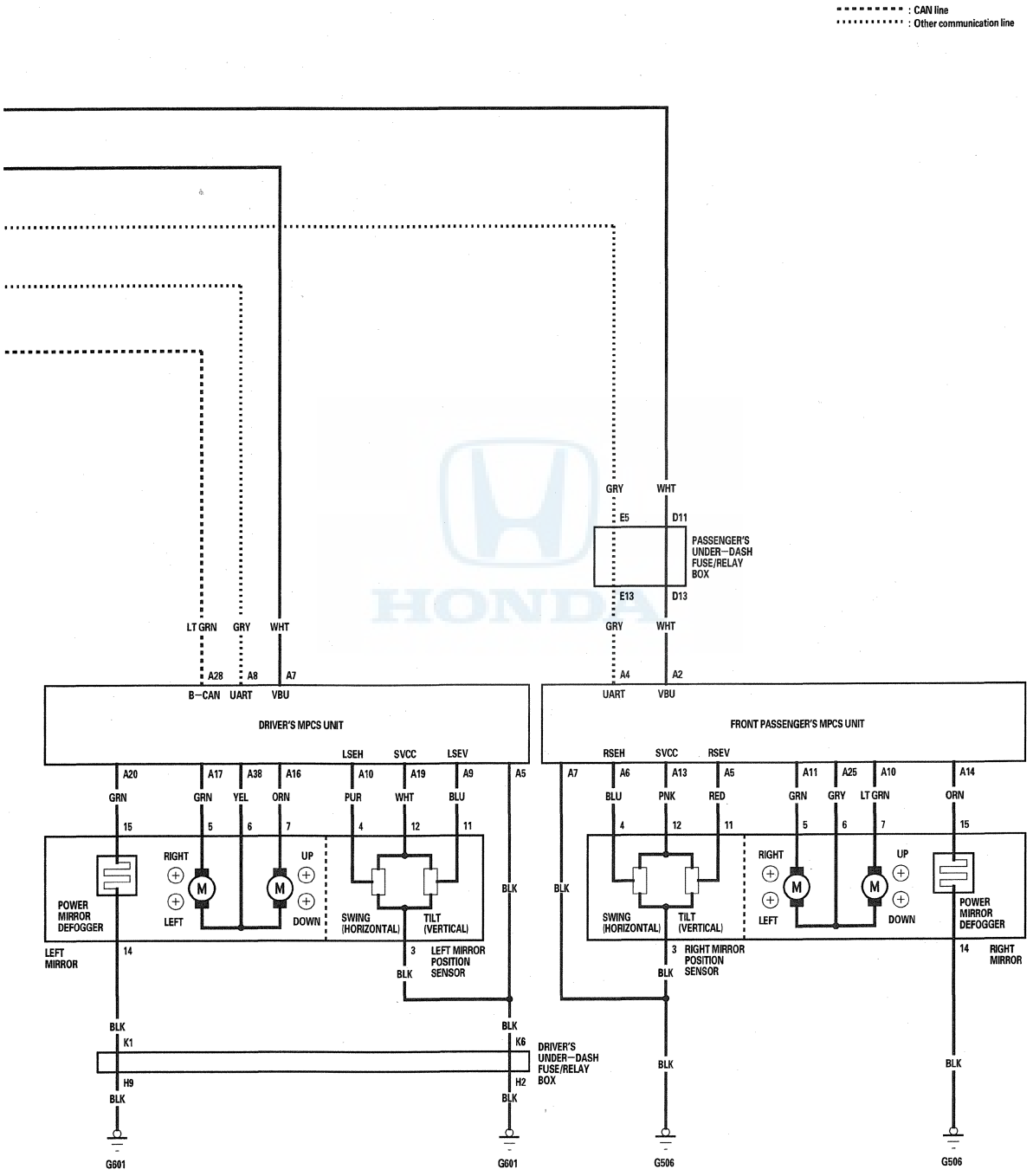
: CAN line
: Other communication line
GRY
WHT
E5
D11
PASSENGER'S UNDER—DASH FUSE/RELAY BOX
E13
D13
LT GRN
GRY
WHT
A28
A8
A7
B—CAN
UART
VBU
A4
A2
UART
VBU
DRIVER'S MPCS UNIT
FRONT PASSENGER'S MPCS UNIT
LSEH
SVCC
LSEV
RSEH
SVCC
RSEV
A20
A17
A38
A16
A10
A19
A9
A5
A7
A6
A13
A5
A11
A25
A10
A14
GRN
GRN
YEL
ORN
PUR
WHT
BLU
BLU
PNK
RED
GRN
GRY
LT GRN
ORN
15
5
6
7
4
12
11
4
12
11
5
6
7
15
RIGHT
UP
LEFT
DOWN
SWING (HORIZONTAL)
TILT (VERTICAL)
POWER MIRROR DEFOGGER
LEFT MIRROR
14
3
LEFT MIRROR POSITION SENSOR
BLK
RIGHT MIRROR POSITION SENSOR
RIGHT MIRROR
BLK
K1
K6
DRIVER'S UNDER—DASH FUSE/RELAY BOX
H9
H2
G601
G601
G506
G506

Circuit Diagram - Power Tilt/Telescopic Steering

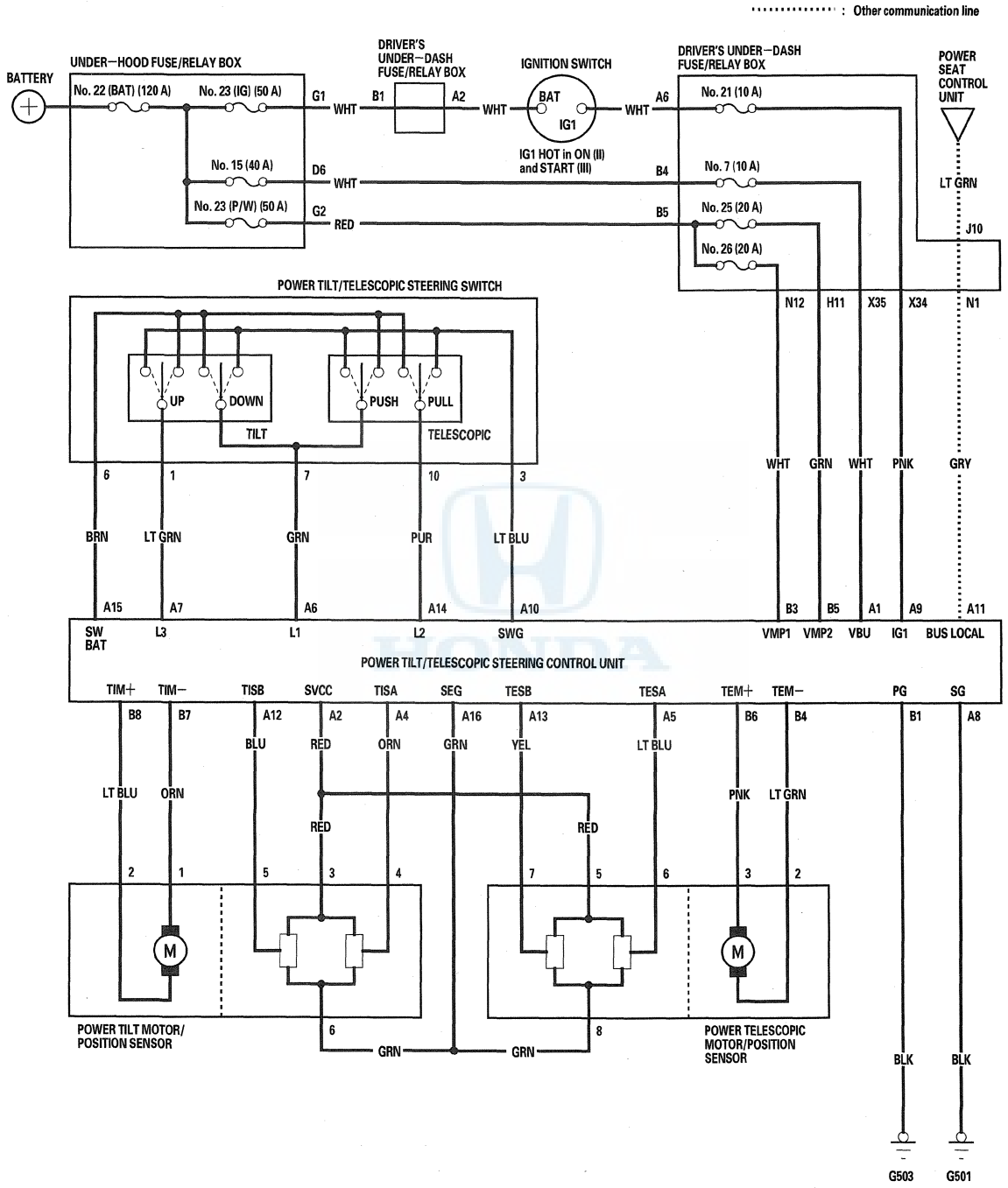

DTC Troubleshooting

DTC B1802: Power Seat Control Unit Internal (EEPROM) Error

1. Clear the DTCs with the HDS.
2. Turn the ignition switch to LOCK (0), and then back to ON (II).
3. Wait for at least 6 seconds.
4. Check for DTCs with the HDS.

   Is DTC B1802 indicated?

   YES—Replace the power seat control unit. ■

   NO—Intermittent failure, the system is OK at this time. ■

DTC B1805: Power Seat Control Unit Lost Communication With Gauge Control Module (VSP/NE Message)

DTC B1808: Power Seat Control Unit Lost Communication With Gauge Control Module (A/T Message)

NOTE: If you are troubleshooting multiple DTCs, be sure to follow the instructions in B-CAN System Diagnosis Test Mode A (see page 22-131).

1. Clear the DTCs with the HDS.
2. Turn the ignition switch to LOCK (0), and then back to ON (II).
3. Wait for at least 6 seconds.
4. Check for DTCs with the HDS.

   Is DTC B1805 and/or B1808 indicated?

   YES—Go to step 5.

   NO—Intermittent failure, the system is OK at this time. Check for loose or poor connections between the power seat control unit and gauge control module. ■

5. Check for DTCs with the HDS.

   Are DTCs B1011, B1060, B1205, B2106, and B2160 also indicated?

   YES—Do the gauge control module input test (see page 22-155). ■

   NO—Replace the power seat control unit. ■

DTC Troubleshooting (cont'd)

DTC B1806: Power Seat Control Unit Lost Communication With MICU (MICU Message)

DTC B1810: Power Seat Control Unit Lost Communication With MICU (MIRRORSW Message)

NOTE: If you are troubleshooting multiple DTCs, be sure to follow the instructions in B-CAN System Diagnosis Test Mode A (see page 22-131).

1. Clear the DTCs with the HDS.
2. Turn the ignition switch to LOCK (0), and then back to ON (II).
3. Wait for at least 6 seconds.
4. Check for DTCs with the HDS.

   Is DTC B1806 and/or B1810 indicated?

   YES—Go to step 5.

   NO—Intermittent failure, the system is OK at this time. Check for loose or poor connection between the power seat control unit and MICU. ■
5. Check for DTCs with the HDS.

   Are DTCs B1055, B1157, B1255, B1605, B2107, B2155, and/or B2156 also indicated?

   YES—Do the MICU input test (see page 22-152). ■

   NO—Do the power seat control unit input test (see page 22-562). ■

DTC B1811: Power Seat Control Unit Lost Communication With Driver's MPCS Unit (DOORSW Message)

DTC B1812: Power Seat Control Unit Lost Communication With Driver's MPCS Unit (MEMSW Message)

NOTE: If you are troubleshooting multiple DTCs, be sure to follow the instructions in B-CAN System Diagnosis Test Mode A (see page 22-131).

1. Clear the DTCs with the HDS.
2. Turn the ignition switch to LOCK (0), and then back to ON (II).
3. Wait for at least 6 seconds.
4. Check for DTCs with the HDS.

   Is DTC B1811 and/or B1812 indicated?

   YES—Go to step 5.

   NO—Intermittent failure, the system is OK at this time. Check for loose or poor connections between the power seat control unit and driver's MPCS unit. ■
5. Check for DTCs with the HDS.

   Are DTCs B1014, B1064, B1181, and/or B1613 also indicated?

   YES—Do the driver's MPCS unit input test (see page 22-159). ■

   NO—Do the power seat control unit input test (see page 22-562). ■

DTC B1825: Power Seat Slide Motor Pulse Error

NOTE: If you are troubleshooting multiple DTCs, be sure to follow the instructions in B-CAN System Diagnosis Test Mode A (see page 22-131).

1. Clear the DTCs with the HDS.
2. Turn the ignition switch to LOCK (0), and then back to ON (II).
3. Operate the power seat adjustment switch in all directions for at least 1 second each.

   NOTE: DTC B1825 is stored when the slide switch is operated more than 1 second after the seat moves to the most forward or most rearward position, even when the system is OK.
4. Check for DTCs with the HDS.

   Is DTC B1825 indicated?

   YES—Go to step 5.

   NO—Intermittent failure, the slide position sensor is OK at this time. Check for loose or poor connections at the power seat control unit connectors. ■
5. Check for DTCs with the HDS.

   Is DTC B1836 also indicated?

   YES—Troubleshoot DTC B1836 first (see page 22-535).

   NO—Go to step 6.
6. Check for DTCs with the HDS.

   Are DTCs B1826, B1827, and/or B1828 also indicated?

   YES—Go to step 18.

   NO—Go to step 7.
7. Clear the DTCs with the HDS.
8. Turn the ignition switch to LOCK (0), and then back to ON (II).
9. Operate the slide switch for at least 2 seconds, and check the slide motor operation.

   Does the slide motor run smoothly?

   YES—Go to step 10.

   NO—Go to step 25.
10. Turn the ignition switch to LOCK (0).
11. Disconnect power seat control unit connector A (40P).
12. Disconnect the slide motor/position sensor 5P connector.
13. Check for continuity between power seat control unit connector A (40P) terminals No. 11, No. 15, and No. 29 and slide motor 5P connector terminals No. 2, No. 3, and No. 4 respectively.

SLIDE MOTOR/POSITION SENSOR 5P CONNECTOR
Wire side of female terminals

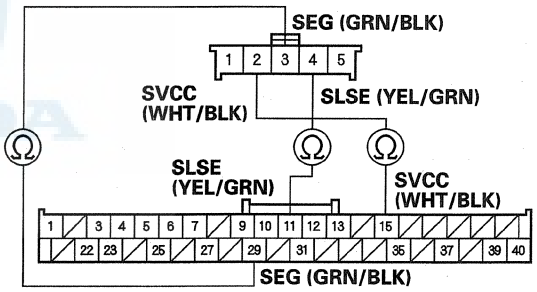

POWER SEAT CONTROL UNIT CONNECTOR A (40P)
Wire side of female terminals

Is there continuity?

YES—Go to step 14.

NO—Repair an open in the wire. ■

(cont'd)

DTC Troubleshooting (cont'd)

14. Check for continuity between power seat control unit connector A (40P) terminal No. 11 and body ground.

POWER SEAT CONTROL UNIT CONNECTOR A (40P)

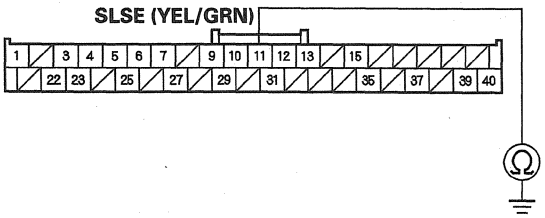

Wire side of female terminals

Is there continuity?

YES—Repair a short to ground in the wire. ■

NO—Go to step 15.

15. Reconnect power seat control unit connector A (40P).

16. Turn the ignition switch to ON (II).

17. Measure the voltage between slide motor/position sensor 5P connector terminals No. 4 and No. 5.

SLIDE MOTOR/POSITION SENSOR 5P CONNECTOR

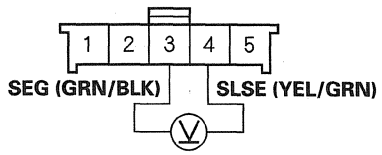

Wire side of female terminals

Is there about 5 V?

YES—Faulty slide motor/position sensor, replace the slide motor assembly (see page 20-120). ■

NO—If there is no voltage, replace the power seat control unit. If there is battery voltage, repair a short in the wire (sensor line). ■

18. Turn ignition switch to LOCK (0).

19. Disconnect power seat control unit connector A (40P).

20. Disconnect the slide motor/position sensor 5P connector.

21. Check for continuity between power seat control unit connector A (40P) terminals No. 15 and No. 29 and slide motor 5P connector terminals No. 2 and No. 3 respectively.

SLIDE MOTOR/POSITION SENSOR 5P CONNECTOR
Wire side of female terminals

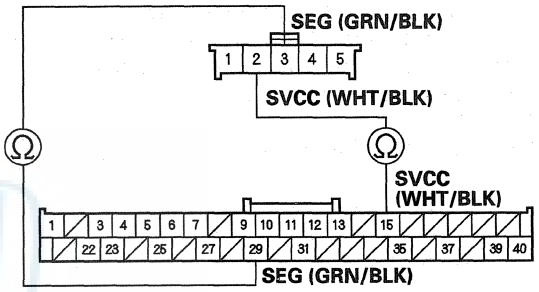

POWER SEAT CONTROL UNIT CONNECTOR A (40P)
Wire side of female terminals

Is there continuity?

YES—Go to step 22.

NO—Repair an open in the wire. ■

22. Reconnect power seat control unit connector A (40P).

23. Turn the ignition switch to ON (II).

24. Measure the voltage between power seat control unit connector A (40P) terminals No. 15 and No. 29.

POWER SEAT CONTROL UNIT CONNECTOR A (40P)

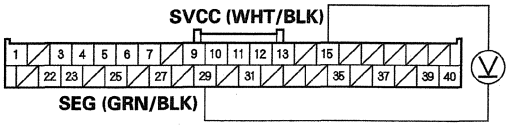

Wire side of female terminals

Is there battery voltage when the slide switch is operated?

YES—Faulty slide motor/position sensor, replace the slide motor assembly (see page 20-120) and recheck for DTCs. ■

NO—Replace the power seat control unit. ■

25. Turn the ignition switch to LOCK (0).

26. Disconnect power seat control unit connector B (18P).

27. Disconnect the slide motor/position 5P connector.

28. Check for continuity between power seat control unit connector B (18P) terminals No. 7 and No. 17 and slide motor/position sensor 5P connector terminals No. 1 and No. 5 respectively.

SLIDE MOTOR/POSITION SENSOR 5P CONNECTOR
Wire side of female terminals

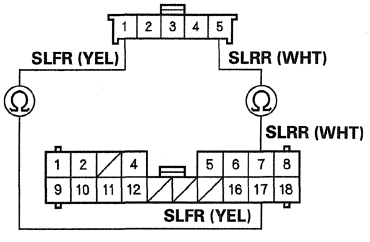

POWER SEAT CONTROL UNIT CONNECTOR B (18P)
Wire side of female terminals

Is there continuity?

YES—Go to step 29.

NO—Repair an open in the wire. ■

29. Check for continuity between body ground and slide/position sensor 5P connector terminals No. 1 and No. 5 individually.

SLIDE MOTOR/POSITION SENSOR 5P CONNECTOR

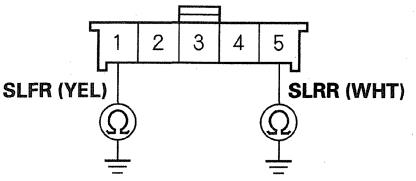

Wire side of female terminals

Is there continuity?

YES—Repair a short to ground in the wire. ■

NO—Go to step 30.

30. Do the slide motor test (see page 22-572).

Is the motor OK?

YES—Replace the power seat control unit. ■

NO—Replace the slide motor assembly (see page 20-120). ■

DTC Troubleshooting (cont'd)

DTC B1826: Power Seat Front Up-down Motor Pulse Error

NOTE: If you are troubleshooting multiple DTCs, be sure to follow the instructions in B-CAN System Diagnosis Test Mode A (see page 22-131).

1. Clear the DTCs with the HDS.
2. Turn the ignition switch to LOCK (0), and then back to ON (II).
3. Operate the power seat adjustment switch in each direction for at least 1 second each.

   NOTE: DTC B1826 is stored when the front up-down switch is operated more than 1 second after the seat moves to the most up or most down position, even when the system is OK.
4. Check for the DTCs with the HDS.

   Is DTC B1826 indicated?

   YES—Go to step 5.

   NO—Intermittent failure, the front up-down position sensor is OK at this time. Check for loose or poor connections at the power seat control unit connectors. ■
5. Check for DTCs with the HDS.

   Is DTC B1836 also indicated?

   YES—Troubleshoot DTC B1836 first (see page 22-535).

   NO—Go to step 6.
6. Check for DTCs with the HDS.

   Are DTCs B1825, B1827 and/or B1828 also indicated?

   YES—Go to step 18.

   NO—Go to step 7.
7. Clear the DTCs with the HDS.
8. Turn the ignition switch to LOCK (0), and then back to ON (II).
9. Operate the front up-down switch for at least 2 seconds, and check the front up-down motor operation.

   Does the front up-down motor run smoothly?

   YES—Go to step 10.

   NO—Go to step 25.
10. Turn the ignition switch to LOCK (0).
11. Disconnect power seat control unit connector A (40P).
12. Disconnect the front up-down motor/position sensor 5P connector.
13. Check for continuity between power seat control unit connector A (40P) terminals No. 12, No. 15, and No. 29 and front up-down motor/position sensor 5P connector terminals No. 3, No. 4, and No. 5 respectively.

FRONT UP-DOWN MOTOR/POSITION SENSOR 5P CONNECTOR
Wire side of female terminals

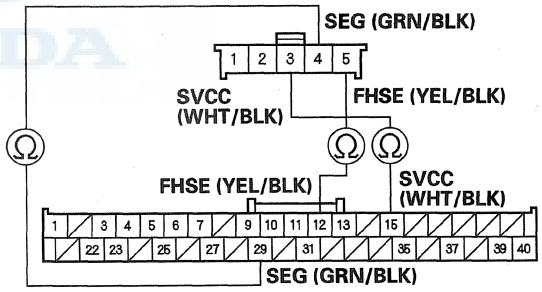

POWER SEAT CONTROL UNIT CONNECTOR A (40P)
Wire side of female terminals

Is there continuity?

YES—Go to step 14.

NO—Repair an open in the wire. ■

14. Check for continuity between power seat control unit connector A (40P) terminal No. 12 and body ground.

POWER SEAT CONTROL UNIT CONNECTOR A (40P)

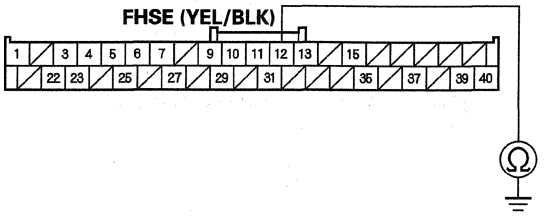

Wire side of female terminals

Is there continuity?

YES—Repair a short to ground in the wire. ■

NO—Go to step 15.

15. Reconnect power seat control unit connector A (40P).

16. Turn the ignition switch to ON (II).

17. Measure the voltage between front up-down motor/position sensor 5P connector terminals No. 4 and No. 5.

FRONT UP-DOWN MOTOR/POSITION SENSOR 5P CONNECTOR

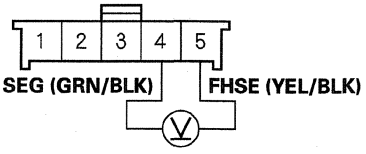

Wire side of female terminals

Is there about 5 V?

YES—Replace the front up-down motor/position sensor (see page 20-122). ■

NO—If there is no voltage, replace the power seat control unit. If there is battery voltage, repair a short in the wire (sensor line). ■

18. Turn the ignition switch to LOCK (0).

19. Disconnect power seat control unit connector A (40P).

20. Disconnect the front up-down motor/position sensor 5P connector.

21. Check for continuity between power seat control unit connector A (40P) terminals No. 15 and No. 29 and front up-down motor/position sensor 5P connector terminals No. 3 and No. 4 respectively.

FRONT UP-DOWN MOTOR/POSITION SENSOR 5P CONNECTOR
Wire side of female terminals

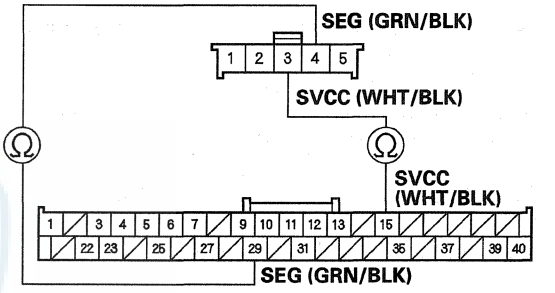

POWER SEAT CONTROL UNIT CONNECTOR A (40P)
Wire side of female terminals

Is there continuity?

YES—Go to step 22.

NO—Repair an open in the wire. ■

22. Reconnect power seat control unit connector A (40P).

23. Turn the ignition switch to ON (II).

(cont'd)

DTC Troubleshooting (cont'd)

24. Measure the voltage between power seat control unit connector A (40P) terminals No. 15 and No. 29.

POWER SEAT CONTROL UNIT CONNECTOR A (40P)

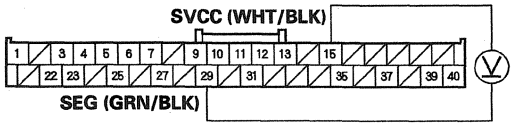

Wire side of female terminals

Is there battery voltage when the front up-down switch is operated?

YES—Replace the front up-down motor/position sensor, and recheck for DTCs. ■

NO—Replace the power seat control unit. ■

25. Turn the ignition switch to LOCK (0).

26. Disconnect power seat control unit connector B (18P).

27. Disconnect the front up-down motor/position sensor 5P connector.

28. Check for continuity between power seat control unit connector B (18P) terminals No. 6 and No. 16 and front up-down motor/position sensor 5P connector terminals No. 1 and No. 2 respectively.

FRONT UP-DOWN MOTOR/POSITION SENSOR 5P CONNECTOR
Wire side of female terminals

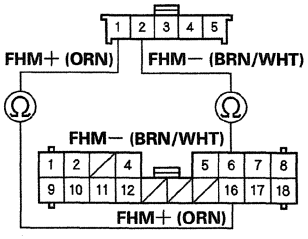

POWER SEAT CONTROL UNIT CONNECTOR B (18P)
Wire side of female terminals

Is there continuity?

YES—Go to step 29.

NO—Repair an open in the wire. ■

29. Check for continuity between front up-down motor/position sensor 5P connector terminals No. 1 and No. 2 and body ground.

FRONT UP-DOWN MOTOR/POSITION SENSOR 5P CONNECTOR

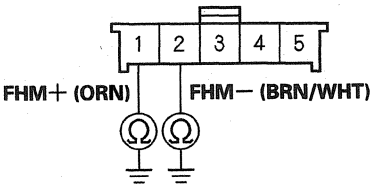

Wire side of female terminals

Is there continuity?

YES—Repair a short to ground in the wire. ■

NO—Go to step 30.

30. Do the front up-down motor test (see page 22-572).

Is the motor OK?

YES—Replace the power seat control unit. ■

NO—Replace the front-up-down motor/position sensor (see page 20-122). ■

DTC B1827: Power Seat Rear Up-down Motor Pulse Error

NOTE: If you are troubleshooting multiple DTCs, be sure to follow the instructions in B-CAN System Diagnosis Test Mode A (see page 22-131).

1. Clear the DTCs with the HDS.
2. Turn the ignition switch to LOCK (0), and then back to ON (II).
3. Operate the power seat adjustment switch in each direction for at least 1 second.

   NOTE: DTC B1827 is stored when the rear up-down switch is operated more than 1 second after the seat moves to the most up or most down position, even when the system is OK.
4. Check for the DTCs with the HDS.

   Is DTC B1827 indicated?

   YES—Go to step 5.

   NO—Intermittent failure, the rear up-down motor/position sensor is OK at this time. Check for loose or poor connections at the power seat control unit connectors. ■
5. Check for DTCs with the HDS.

   Is DTC B1836 also indicated?

   YES—Troubleshoot DTC B1836 first (see page 22-535).

   NO—Go to step 6.
6. Check for DTCs with the HDS.

   Are DTCs B1825, B1826, and/or B1828 also indicated?

   YES—Go to step 18.

   NO—Go to step 7.
7. Clear the DTCs with the HDS.
8. Turn the ignition switch to LOCK (0), and then back to ON (II).
9. Operate the rear up-down switch for at least 2 seconds, and check the rear up-down motor operation.

   Does the rear up-down motor run smoothly?

   YES—Go to step 10.

   NO—Go to step 25.
10. Turn the ignition switch to LOCK (0).
11. Disconnect power seat control unit connector A (40P).
12. Disconnect the rear up-down motor/position sensor 5P connector.
13. Check for continuity between power seat control unit connector A (40P) terminals No. 13, No. 15, and No. 29 and rear up-down motor/position sensor 5P connector terminals No. 3, No. 4, and No. 5 respectively.

REAR UP-DOWN MOTOR/POSITION SENSOR 5P CONNECTOR
Wire side of female terminals

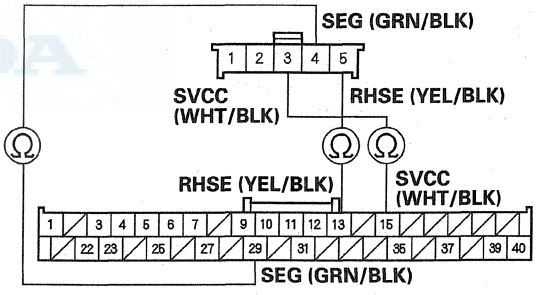

POWER SEAT CONTROL UNIT CONNECTOR A (40P)
Wire side of female terminals

Is there continuity?

YES—Go to step 14.

NO—Repair an open in the wire. ■

(cont'd)

DTC Troubleshooting (cont'd)

14. Check for continuity between power seat control unit connector A (40P) terminal No. 13 and body ground.

POWER SEAT CONTROL UNIT CONNECTOR A (40P)

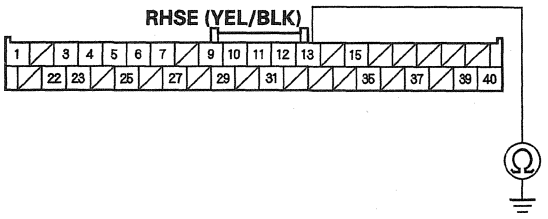

Wire side of female terminals

Is there continuity?

YES—Repair a short to ground in the wire. ■

NO—Go to step 15.

15. Reconnect power seat control unit connector A (40P).

16. Turn the ignition switch to ON (II).

17. Measure the voltage between rear up-down motor/position sensor 5P connector terminals No. 4 and No. 5.

REAR UP-DOWN MOTOR/POSITION SENSOR 5P CONNECTOR

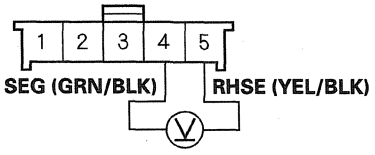

Wire side of female terminals

Is there about 5 V?

YES—Replace the rear up-down motor/position sensor (see page 20-122). ■

NO—If there is no voltage, replace the power seat control unit. If there is battery voltage, repair a short in the wire (sensor line). ■

18. Turn the ignition switch to LOCK (0).

19. Disconnect power seat control unit connector A (40P).

20. Disconnect the rear up-down motor/position sensor 5P connector.

21. Check for continuity between power seat control unit connector A (40P) terminals No. 15 and No. 29 and rear up-down motor/position sensor 5P connector terminals No. 3 and No. 4 respectively.

REAR UP-DOWN MOTOR/POSITION SENSOR 5P CONNECTOR
Wire side of female terminals

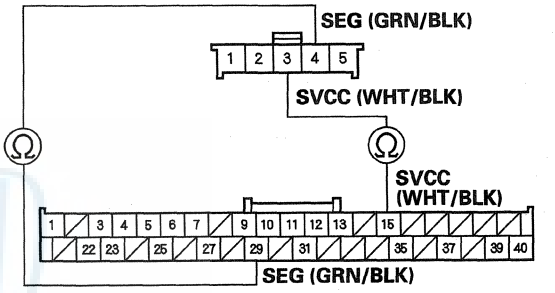

POWER SEAT CONTROL UNIT CONNECTOR A (40P)
Wire side of female terminals

Is there continuity?

YES—Go to step 22.

NO—Repair an open in the wire. ■

22. Reconnect power seat control unit connector A (40P).

23. Turn the ignition switch to ON (II).

24. Measure the voltage between power seat control unit connector A (40P) terminals No. 15 and No. 29.

POWER SEAT CONTROL UNIT CONNECTOR A (40P)

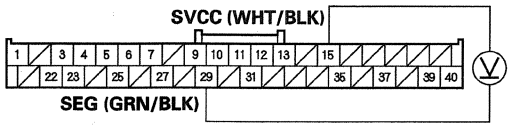

Wire side of female terminals

Is there battery voltage when the rear up-down switch is operated?

YES—Replace the rear up-down motor/position sensor (see page 20-122), and recheck for DTCs. ■

NO—Replace the power seat control unit. ■

25. Turn the ignition switch to LOCK (0).

26. Disconnect power seat control unit connector B (18P).

27. Disconnect the rear up-down motor/position sensor 5P connector.

28. Check for continuity between power seat control unit connector B (18P) terminals No. 2 and No. 10 and rear up-down motor/position sensor 5P connector terminals No. 1 and No. 2 respectively.

REAR UP-DOWN MOTOR/POSITION SENSOR 5P CONNECTOR
Wire side of female terminals

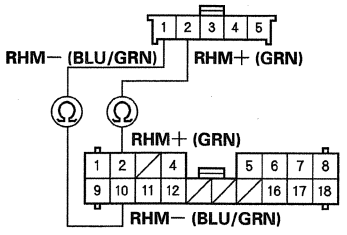

POWER SEAT CONTROL UNIT CONNECTOR B (18P)
Wire side of female terminals

Is there continuity?

YES—Go to step 29.

NO—Repair an open in the wire. ■

29. Check for continuity between body ground and rear up-down motor/position sensor 5P connector terminals No. 1 and No. 2 individually.

REAR UP-DOWN MOTOR/POSITION SENSOR 5P CONNECTOR

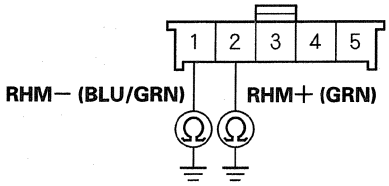

Wire side of female terminals

Is there continuity?

YES—Repair a short to ground in the wire. ■

NO—Go to step 30.

30. Do the rear up-down motor test (see page 22-572).

Is the motor OK?

YES—Replace the power seat control unit. ■

NO—Replace the rear up-down motor/position sensor. ■

DTC Troubleshooting (cont'd)

DTC B1828: Power Seat Recline Motor Pulse Error

NOTE: If you are troubleshooting multiple DTCs, be sure to follow the instructions in B-CAN System Diagnosis Test Mode A (see page 22-131).

1. Clear the DTCs with the HDS.
2. Turn the ignition switch to LOCK (0), and then back to ON (II).
3. Operate the power seat adjustment switch in each direction for at least 1 second each.

   NOTE: DTC B1828 is stored when the recline switch is operated more than 1 second after the seat back reclines to the most forward or most rearward position, even when the system is OK.
4. Check for the DTCs with the HDS.

   Is DTC B1828 indicated?

   YES—Go to step 5.

   NO—Intermittent failure, the recline motor/position sensor is OK at this time. Check for loose or poor connections at the power seat control unit connectors. ■
5. Check for DTCs with the HDS.

   Is DTC B1836 also indicated?

   YES—Troubleshoot DTC B1836 first (see page 22-535).

   NO—Go to step 6.
6. Check for DTCs with the HDS.

   Are DTCs B1825, B1826, and/or B1827 also indicated?

   YES—Go to step 18.

   NO—Go to step 7.
7. Clear the DTCs with the HDS.
8. Turn the ignition switch to LOCK (0), and then back to ON (II).
9. Operate the recline switch for at least 2 seconds, and check the recline motor operation.

   Does the recline motor run smoothly?

   YES—Go to step 10.

   NO—Go to step 25.
10. Turn the ignition switch to LOCK (0).
11. Disconnect power seat control unit connector A (40P).
12. Disconnect the recline motor/position sensor 5P connector.
13. Check for continuity between power seat control unit connector A (40P) terminals No. 10, No. 15, and No. 29 and recline motor/position sensor 5P connector terminals No. 3, No. 4, and No. 5 respectively.

RECLINE MOTOR/POSITION SENSOR 5P CONNECTOR
Wire side of female terminals

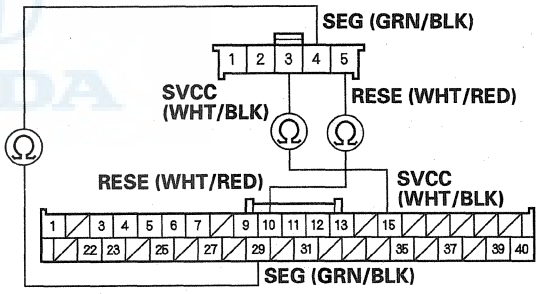

POWER SEAT CONTROL UNIT CONNECTOR A (40P)
Wire side of female terminals

Is there continuity?

YES—Go to step 14.

NO—Repair an open in the wire. ■

14. Check for continuity between power seat control unit connector A (40P) terminal No. 10 and body ground.

POWER SEAT CONTROL UNIT CONNECTOR A (40P)

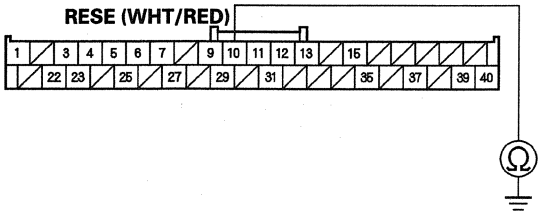

Wire side of female terminals

Is there continuity?

YES—Repair a short to ground in the wire.■

NO—Go to step 15.

15. Reconnect power seat control unit connector A (40P).

16. Turn the ignition switch to ON (II).

17. Measure the voltage between recline motor/position sensor 5P connector terminals No. 4 and No. 5.

RECLINE MOTOR/POSITION SENSOR 5P CONNECTOR

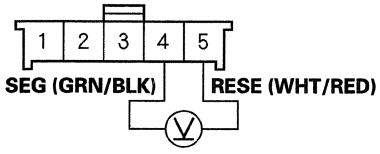

Wire side of female terminals

Is there about 5 V?

YES—Replace the recline motor/position sensor (see page 20-117).■

NO—If there is no voltage, replace the power seat control unit. If there is battery voltage, repair a short in the wire (sensor line).■

18. Turn the ignition switch to LOCK (0).

19. Disconnect power seat control unit connector A (40P).

20. Disconnect the recline motor/position sensor 5P connector.

21. Check for continuity between power seat control unit connector A (40P) terminals No. 15 and No. 29 and recline motor/position sensor 5P connector terminals No. 3 and No. 4 respectively.

RECLINE MOTOR/POSITION SENSOR 5P CONNECTOR
Wire side of female terminals

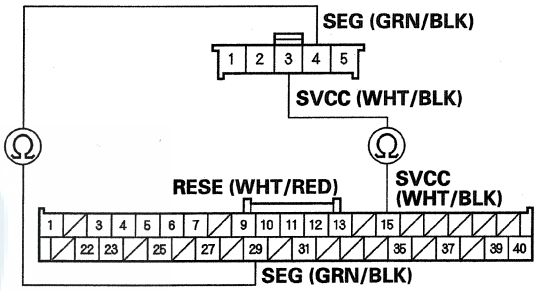

POWER SEAT CONTROL UNIT CONNECTOR A (40P)
Wire side of female terminals

Is there continuity?

YES—Go to step 22.

NO—Repair an open in the wire.■

22. Reconnect power seat control unit connector A (40P).

23. Turn the ignition switch to ON (II).

(cont'd)

DTC Troubleshooting (cont'd)

24. Measure the voltage between power seat control unit connector A (40P) terminals No. 15 and No. 29.

POWER SEAT CONTROL UNIT CONNECTOR A (40P)

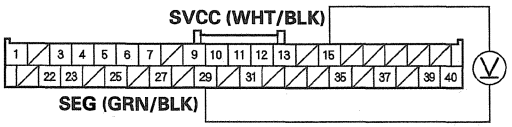

Wire side of female terminals

Is there battery voltage when the recline switch is operated?

YES—Replace the recline motor/position sensor (see page 20-117), and recheck for DTCs. ■

NO—Replace the power seat control unit. ■

25. Turn the ignition switch to LOCK (0).

26. Disconnect power seat control unit connector B (18P).

27. Disconnect the recline motor/position sensor 5P connector.

28. Check for continuity between power seat control unit connector B (18P) terminals No. 9 and No. 11 and recline motor/position sensor 5P connector terminals No. 1 and No. 2 respectively.

RECLINE MOTOR/POSITION SENSOR 5P CONNECTOR
Wire side of female terminals

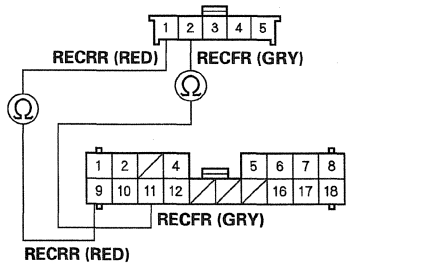

POWER SEAT CONTROL UNIT CONNECTOR B (18P)
Wire side of female terminals

Is there continuity?

YES—Go to step 29.

NO—Repair an open in the wire. ■

29. Check for continuity between body ground and recline /position sensor 5P connector terminals No. 1 and No. 2 individually.

RECLINE MOTOR/POSITION SENSOR 5P CONNECTOR

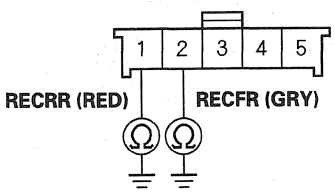

Wire side of female terminals

Is there continuity?

YES—Repair a short to ground in the wire. ■

NO—Go to step 30.

30. Do the recline motor test (see page 22-572).

Is the motor OK?

YES—Replace the power seat control unit. ■

NO—Replace the recline motor/position sensor (see page 20-117). ■

DTC B1829: A/T P Signal and VSS Signal Mismatch

NOTE: If you are troubleshooting multiple DTCs, be sure to follow the instructions in B-CAN System Diagnosis Test Mode A (see page 22-131).

1. Clear the DTCs with the HDS.
2. Start the engine.
3. Test drive at 6 mph (10 km/h) for 10 seconds.
4. Check for the DTCs with the HDS.

   Is DTC B1829 indicated?

   YES—Go to step 5.

   NO—Intermittent failure. The system is OK at this time. Check for loose or poor connections at the power seat control unit connectors. ■
5. Check the D indicator of the A/T gear position indicator.

   Is the D indicator blinking?

   YES—Go to the automatic transmission system troubleshooting. ■

   NO—Go to step 6.
6. Check for the gauge control module DTCs with the HDS.

   Are there any DTCs indicated?

   YES—Go to the gauge control module indicated DTCs troubleshooting. ■

   NO—Do the power seat control unit input test (see page 22-562). ■

DTC B1835: Tilt/Telescopic Switch Signal Input Error

NOTE: If you are troubleshooting multiple DTCs, be sure to follow the instructions in B-CAN System Diagnosis Test Mode A (see page 22-131).

1. Clear the DTC with the HDS.
2. Turn the ignition switch to LOCK (0), and then back to ON (II).
3. Operate the tilt/telescopic switch in each direction for at least 3 seconds each.
4. Check for DTCs with the HDS.

   Is DTC B1835 indicated?

   YES—Go to step 5.

   NO—Intermittent failure, the power tilt/telescopic steering system is OK at this time. Check for loose or poor connections at the tilt/telescopic switch connector and at the power tilt/telescopic control unit connectors. ■
5. Turn the ignition switch to LOCK (0).
6. Do the tilt/telescopic switch test (see page 22-574).

   Is the switch OK?

   YES—Go to step 7.

   NO—Replace the switch. ■

(cont'd)

DTC Troubleshooting (cont'd)

7. Disconnect power tilt/telescopic steering control unit connector A (16P).
8. Disconnect the tilt/telescopic switch 13P connector.
9. Check for continuity between body ground and tilt/telescopic switch 13P connector terminals No. 1, No. 3, No. 6, No. 7, and No. 10 individually.

TILT/TELESCOPIC SWITCH 13P CONNECTOR

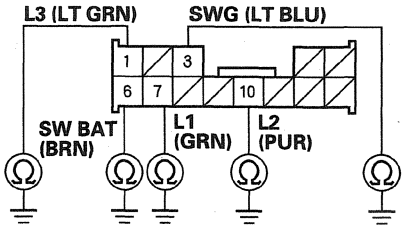

Wire side of female terminals

Is there continuity?

YES—Repair a short to ground in the wire. ■

NO—Go to step 10.

10. Check for continuity between power tilt/telescopic steering control unit connector A (16P) terminals and tilt/telescopic switch 13P connector terminals as shown:

TILT/TELESCOPIC SWITCH 13P CONNECTOR	POWER TILT/TELESCOPIC STEERING CONTROL UNIT CONNECTOR A (16P)
No. 1	No. 7
No. 3	No. 10
No. 6	No. 15
No. 7	No. 6
No. 10	No. 14

TILT/TELESCOPIC SWITCH 13P CONNECTOR
Wire side of female terminals

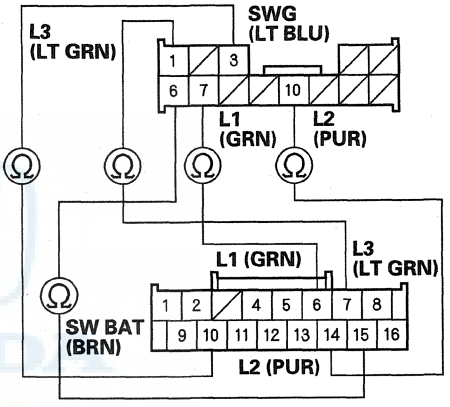

POWER TILT/TELESCOPIC STEERING CONTROL UNIT CONNECTOR A (16P)
Wire side of female terminals

Is there continuity?

YES—Replace the power tilt/telescopic steering control unit. ■

NO—Repair an open in the wire. ■

DTC B1836: Power Seat Position Sensor Circuit Short

NOTE: If you are troubleshooting multiple DTCs, be sure to follow the instructions in B-CAN System Diagnosis Test Mode A (see page 22-131).

1. Clear the DTC with the HDS.
2. Turn the ignition switch to LOCK (0), and then back to ON (II).
3. Operate the power seat adjustment switch in each direction for at least 1 second each.
4. Check for DTCs with the HDS.

   Is DTC B1836 indicated?

   YES—Go to step 5.

   NO—Intermittent failure, the driving position memory system is OK at this time. Check for loose or poor connections at the power seat control unit connectors. ■
5. Turn the ignition switch to LOCK (0).
6. Disconnect power seat control unit connector A (40P).
7. Disconnect each 5P connector from the slide motor/position sensor, the recline motor/position sensor, the front up-down motor/position sensor, and the rear up-down motor/position sensor.
8. Check for continuity between power seat control unit connector A (40P) terminal No. 15 and body ground.

POWER SEAT CONTROL UNIT CONNECTOR A (40P)

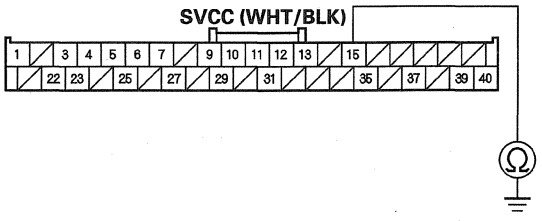

Wire side of female terminals

Is there continuity?

YES—Repair a short to ground in the wire. ■

NO—Go to step 9.

9. At the sensor side, check for continuity between the SVCC terminal of each position sensor and body ground (motor body).

SLIDE MOTOR/POSITION SENSOR 5P CONNECTOR

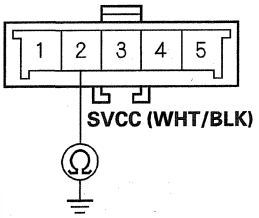

Terminal side of male terminals

FRONT UP-DOWN MOTOR/POSITION SENSOR 5P CONNECTOR
REAR UP-DOWN MOTOR/POSITION SENSOR 5P CONNECTOR
RECLINE MOTOR/POSITION SENSOR 5P CONNECTOR

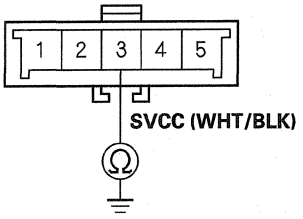

Terminal side of male terminals

Is there continuity?

YES—Replace the motor/position sensor that has continuity. ■

NO—Replace the power seat control unit. ■

DTC Troubleshooting (cont'd)

DTC B1837: Driving Position Memory Recall Timeout

NOTE: If you are troubleshooting multiple DTCs, be sure to follow the instructions in B-CAN System Diagnosis Test Mode A (see page 22-131).

1. Clear the DTC with the HDS.
2. Turn the ignition switch to LOCK (0), and then back to ON (II).
3. Move the steering position to the full tilt up and full telescopic out positions with the power tilt/telescopic steering switch.
4. Move both power mirrors to the full up and full left positions with the power mirror switch.
5. Move the power seat to the full front up and full rear up positions, then slide the seat all the way back and completely recline the seat-back rearward with the power seat adjustment switch.
6. Put this seating position into memory with the driving position memory switch.
7. Manually move the seat to the complete opposite of the positions just memorized.
8. Recall the memory positions with the driving position memory switch.
9. Wait for at least 3 minutes.
10. Check for DTCs with the HDS.

    Are any DTCs indicated?

    YES—Go to step 11.

    NO—Intermittent failure, the driving position memory system is OK at this time. Check for loose or poor connections at each DPMS connector. ■
11. Check for DTCs with the HDS.

    Are any DTCs other than B1837 indicated?

    YES—Go to the indicated DTCs troubleshooting. ■

    NO—Go to step 12.
12. Clear the DTCs with the HDS.
13. Wait for at least 6 seconds.
14. Move the motors shown one at a time, and check their operation.

    - Steering tilt motor up and down
    - Steering telescopic motor pulled and pushed
    - Power mirror actuator (up, down, left, right)
    - Power seat (slide forward/backward, recline forward/rearward, front up-down, rear up-down)

    Does any motor fail to run smoothly?

    YES—Go to the failed motor test:

    - Power tilt/telescopic motor test (see page 22-574).
    - Power mirror actuator test (see page 22-454).
    - Power seat motor test (see page 22-572).

    If the motor is OK, check the engagement of the motor gear. ■

    NO—Go to the each input test:

    - Power seat control unit input test (see page 22-562). ■
    - Power tilt/telescopic steering control unit input test (see page 22-568). ■
    - Driver's MPCS unit input test (see page 22-159). ■

DTC B1840: Tilt Motor Pulse Error

NOTE: If you are troubleshooting multiple DTCs, be sure to follow the instructions in B-CAN System Diagnosis Test Mode A (see page 22-131).

1. Clear the DTCs with the HDS.
2. Turn the ignition switch to LOCK (0), and then back to ON (II).
3. Operate the tilt switch in each direction for at least 1 second.
4. Check for DTCs with the HDS.

   Is DTC B1840 indicated?

   YES—Go to step 5.

   NO—Intermittent failure, the tilt position sensor is OK at this time. Check for loose or poor connections at the power tilt motor/position sensor connector and at the power tilt/telescopic steering control unit connector. ■
5. Check for DTCs with the HDS.

   Is DTC B1841 also indicated?

   YES—Go to step 17.

   NO—Go to step 6.
6. Clear the DTCs with the HDS.
7. Turn the ignition switch to LOCK (0), and then back to ON (II).
8. Operate the tilt switch for 2 seconds, and check the tilt motor operation.

   Does the tilt motor run smoothly?

   YES—Go to step 9.

   NO—Go to step 26.
9. Turn the ignition switch to LOCK (0).
10. Disconnect power tilt/telescopic steering control unit connector A (16P).
11. Disconnect the power tilt motor/position sensor 6P connector.
12. Check for continuity between power tilt/telescopic steering control unit connector A (16P) terminals No. 4, No. 12, and No. 16 and power tilt motor/position sensor 6P connector terminals No. 4, No. 5, and No. 6 respectively.

POWER TILT MOTOR/POSITION SENSOR 6P CONNECTOR
Wire side of female terminals

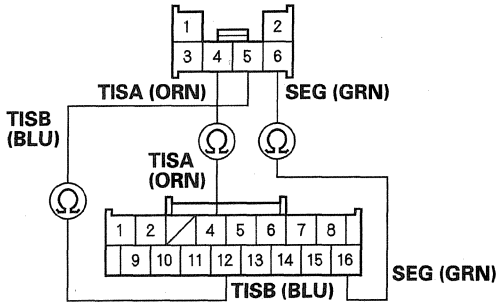

POWER TILT/TELESCOPIC STEERING CONTROL UNIT CONNECTOR A (16P)
Wire side of female terminals

Is there continuity?

YES—Go to step 13.

NO—Repair an open in the wire. ■

13. Check for continuity between body ground and power tilt/telescopic steering control unit connector A (16P) terminals No. 4 and No. 12 individually.

POWER TILT/TELESCOPIC CONTROL UNIT CONNECTOR A (16P)

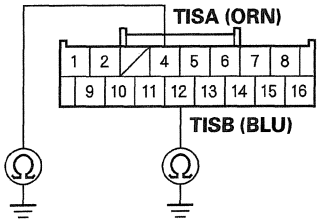

Wire side of female terminals

Is there continuity?

YES—Repair a short to ground in the wire. ■

NO—Go to step 14.

(cont'd)

DTC Troubleshooting (cont'd)

14. Reconnect power tilt/telescopic steering control unit connector A (16P).

15. Turn the ignition switch to ON (II).

16. Measure the voltage between power tilt motor/position sensor 6P connector terminals No. 4 and No. 6 and between terminals No. 5 and No. 6.

POWER TILT MOTOR/POSITION SENSOR 6P CONNECTOR

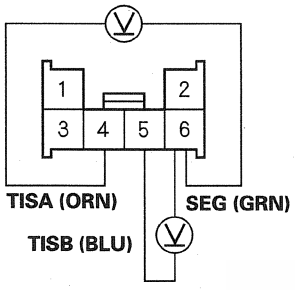

Wire side of female terminals

Is there about 5 V?

YES—Replace the steering column assembly (see page 17-25). ■

NO—If there is no voltage, replace the power tilt/telescopic steering control unit. If there is battery voltage, repair a short in the wire. ■

17. Turn the ignition switch to LOCK (0).

18. Disconnect power tilt/telescopic steering control unit connector A (16P).

19. Disconnect the power tilt motor/position sensor 6P connector.

20. Check for continuity between power tilt/telescopic steering control unit connector A (16P) terminals No. 2 and No. 16 and power tilt motor/position sensor 6P connector terminals No. 3 and No. 6 respectively.

POWER TILT MOTOR/POSITION SENSOR 6P CONNECTOR
Wire side of female terminals

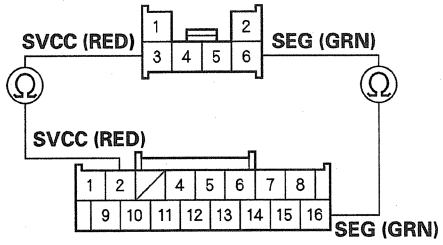

POWER TILT/TELESCOPIC STEERING CONTROL UNIT CONNECTOR A (16P)
Wire side of female terminals

Is there continuity?

YES—Go to step 21.

NO—Repair an open in the wire. ■

21. Disconnect the power telescopic motor/position sensor 8P connector.

22. Check for continuity between power tilt motor/position sensor 6P connector terminal No. 3 and body ground.

POWER TILT MOTOR/POSITION SENSOR 6P CONNECTOR

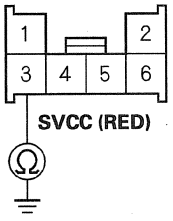

Wire side of female terminals

Is there continuity?

YES—Repair a short to ground in the wire. ■

NO—Go to step 23.

23. Reconnect power tilt/telescopic steering control unit connector A (16P).

24. Turn the ignition switch to ON (II).

25. Measure the voltage between power tilt/telescopic steering control unit connector A (16P) terminals No. 2 and No. 16.

POWER TILT/TELESCOPIC STEERING CONTROL UNIT CONNECTOR A (16P)

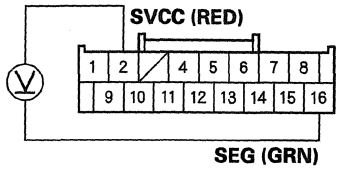

Wire side of female terminals

Is there battery voltage when the tilt switch is operated?

YES—Replace the steering column assembly (see page 17-25). ■

NO—Replace the power tilt/telescopic steering control unit. ■

26. Turn the ignition switch to LOCK (0).

27. Disconnect power tilt/telescopic steering control unit connector B (8P).

28. Disconnect the power tilt motor/position sensor 6P connector.

29. Check for continuity between power tilt/telescopic steering control unit connector B (8P) terminals No. 7 and No. 8 and power tilt motor/position sensor 6P connector terminals No. 1 and No. 2 respectively.

POWER TILT/TELESCOPIC STEERING CONTROL UNIT CONNECTOR B (8P)
Wire side of female terminals

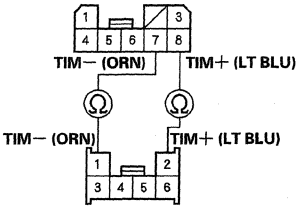

POWER TILT MOTOR/POSITION SENSOR 6P CONNECTOR
Wire side of female terminals

Is there continuity?

YES—Go to step 30.

NO—Repair an open in the wire. ■

30. Check for continuity between body ground and power tilt motor/position sensor 6P connector terminals No. 1 and No. 2 individually.

POWER TILT MOTOR/POSITION SENSOR 6P CONNECTOR

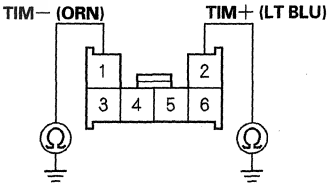

Wire side of female terminals

Is there continuity?

YES—Repair a short to ground in the wire. ■

NO—Go to step 31.

31. Do the tilt motor test (see page 22-574).

Is the motor OK?

YES—Replace the power tilt/telescopic steering control unit. ■

NO—Replace the steering column assembly (see page 17-25). ■

DTC Troubleshooting (cont'd)

DTC B1841: Telescopic Motor Pulse Error

NOTE: If you are troubleshooting multiple DTCs, be sure to follow the instructions in B-CAN System Diagnosis Test Mode A (see page 22-131).

1. Clear the DTCs with the HDS.
2. Turn the ignition switch to LOCK (0), and then back to ON (II).
3. Operate the telescopic switch in each direction for at least 1 second.
4. Check for DTCs with the HDS.

   Is DTC B1841 indicated?

   YES—Go to step 5.

   NO—Intermittent failure, the telescopic position sensor is OK at this time. Check for loose or poor connections at the power telescopic motor/position sensor connector and at the power tilt/telescopic steering control unit connector. ■
5. Clear the DTCs with the HDS.

   Is DTC B1840 also indicated?

   YES—Go to step 17.

   NO—Go to step 6.
6. Clear the DTCs with the HDS.
7. Turn the ignition switch to LOCK (0), and then back to ON (II).
8. Operate the telescopic switch for at least 2 seconds, and check the telescopic motor operation.

   Does the telescopic motor run smoothly?

   YES—Go to step 9.

   NO—Go to step 26.
9. Turn the ignition switch to LOCK (0).
10. Disconnect power tilt/telescopic steering control unit connector A (16P).
11. Disconnect the power telescopic motor/position sensor 8P connector.
12. Check for continuity between power tilt/telescopic steering control unit connector A (16P) terminals No. 5, No. 13, and No. 16 and power telescopic motor/position sensor 8P connector terminals No. 6, No. 7, and No. 8 respectively.

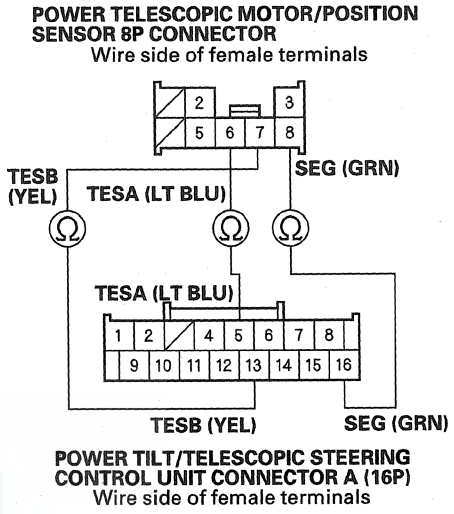

Is there continuity?

YES—Go to step 13.

NO—Repair an open in the wire. ■

13. Check for continuity between body ground and power tilt/telescopic steering control unit connector A (16P) terminals No. 5 and No. 13 individually.

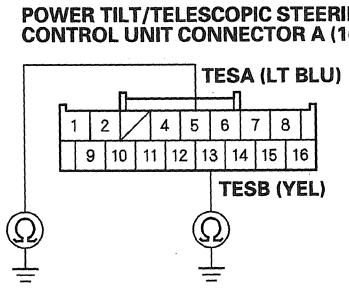

Is there continuity?

YES—Repair a short to ground in the wire. ■

NO—Go to step 14.

14. Reconnect power tilt/telescopic steering control unit connector A (16P).

15. Turn the ignition switch to ON (II).

16. Measure the voltage between power telescopic motor/position sensor 8P connector terminals No. 6 and No. 8 and between terminals No. 7 and No. 8.

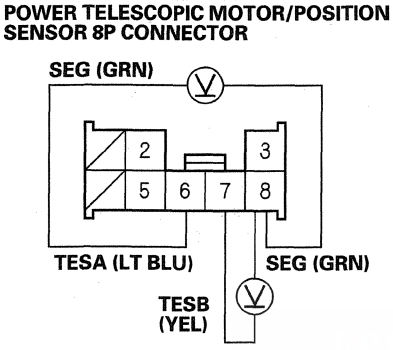

Is there about 5 V?

YES—Replace the steering column assembly (see page 17-25). ■

NO—If there is no voltage, replace the power tilt/telescopic steering control unit. If there is battery voltage, repair a short in the wire. ■

17. Turn the ignition switch to LOCK (0).

18. Disconnect power tilt/telescopic steering control unit connector A (16P).

19. Disconnect the power telescopic motor/position sensor 8P connector.

20. Check for continuity between power tilt/telescopic steering control unit connector A (16P) terminals No. 2 and No. 16 and power telescopic motor/position sensor 8P connector terminals No. 5 and No. 8 respectively.

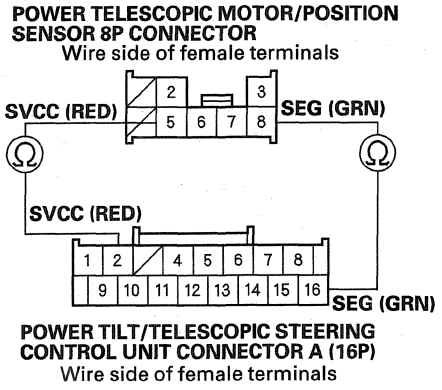

Is there continuity?

YES—Go to step 21.

NO—Repair an open in the wire. ■

21. Disconnect the power tilt motor/position sensor 6P connector.

22. Check for continuity between power telescopic motor/position sensor 8P connector terminal No. 5 and body ground.

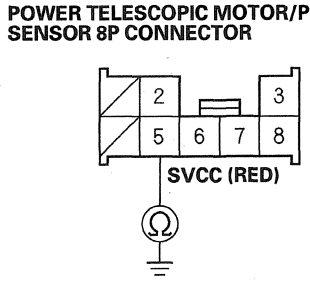

Is there continuity?

YES—Repair a short to ground in the wire. ■

NO—Go to step 23.

(cont'd)

DTC Troubleshooting (cont'd)

23. Reconnect power tilt/telescopic steering control unit connector A (16P).

24. Turn the ignition switch to ON (II).

25. Measure the voltage between power tilt/telescopic steering control unit connector A (16P) terminals No. 2 and No. 16.

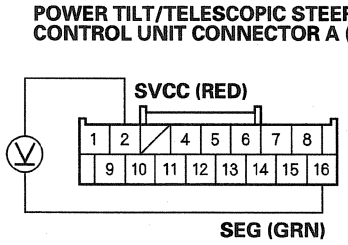

Wire side of female terminals

Is there battery voltage when the telescopic switch is operated?

YES—Replace the steering column assembly (see page 17-25). ■

NO—Replace the power tilt/telescopic steering control unit. ■

26. Turn the ignition switch to LOCK (0).

27. Disconnect power tilt/telescopic steering control unit connector B (8P).

28. Disconnect the power telescopic motor/position sensor 8P connector.

29. Check for continuity between power tilt/telescopic steering control unit connector B (8P) terminals No. 4 and No. 6 and power telescopic motor/position sensor 8P connector terminals No. 2 and No. 3 respectively.

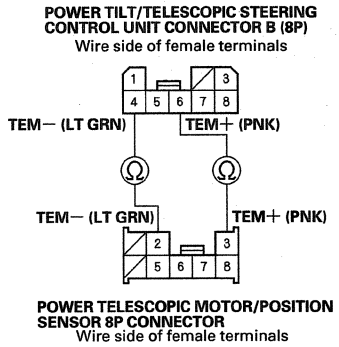

Is there continuity?

YES—Go to step 30.

NO—Repair an open in the wire. ■

30. Check for continuity between body ground and power telescopic motor/position sensor 8P connector terminals No. 2 and No. 3 individually.

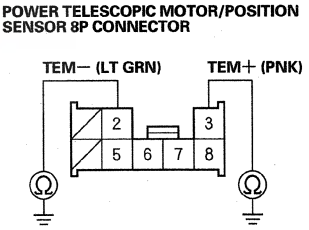

Wire side of female terminals

Is there continuity?

YES—Repair a short to ground in the wire. ■

NO—Go to step 31.

31. Do the telescopic motor test (see page 22-574).

Is the motor OK?

YES—Replace the power tilt/telescopic steering control unit. ■

NO—Replace the steering column assembly (see page 17-25). ■

DTC B1842: Power Tilt/Telescopic Position Sensor Power Supply Circuit (SVCC Line) Short

NOTE: If you are troubleshooting multiple DTCs, be sure to follow the instructions in B-CAN System Diagnosis Test Mode A (see page 22-131).

1. Clear the DTCs with the HDS.
2. Turn the ignition switch to LOCK (0), and then back to ON (II).
3. Operate the tilt/telescopic switch in each direction for at least 1 second.
4. Check for DTCs with the HDS.

   Is DTC B1842 indicated?

   YES—Go to step 5.

   NO—Intermittent failure, the system is OK at this time. Check for loose or poor connections at the power tilt motor/position sensor connector, at the power telescopic motor/position sensor connector, and at the power tilt/telescopic steering control unit connector. ■
5. Turn the ignition switch to LOCK (0).
6. Disconnect power tilt/telescopic steering control unit connector A (16P).
7. Disconnect the power telescopic motor/position sensor 8P connector.
8. Disconnect the power tilt motor/position sensor 6P connector.
9. Check for continuity between power tilt/telescopic steering control unit connector A (16P) terminal No. 2 and body ground.

POWER TILT/TELESCOPIC STEERING CONTROL UNIT CONNECTOR A (16P)

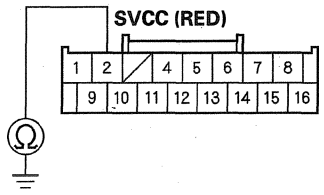

Wire side of female terminals

Is there continuity?

YES—Repair a short to ground in the wire. ■

NO—Go to step 10.

10. At the sensor side, check for continuity between power telescopic motor/position sensor 8P connector terminal No. 5 and body ground (motor body).

POWER TELESCOPIC MOTOR/POSITION SENSOR 8P CONNECTOR

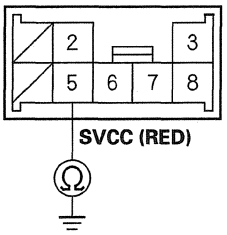

Terminal side of male terminals

Is there continuity?

YES—Repair a short in the wire. ■

NO—Go to step 11.

(cont'd)

DTC Troubleshooting (cont'd)

11. At the sensor side, check for continuity between power tilt motor/position sensor 6P connector terminal No. 3 and body ground (motor body).

POWER TILT MOTOR/POSITION SENSOR 6P CONNECTOR

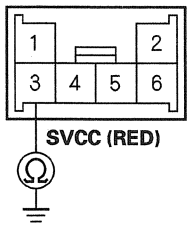

Terminal side of male terminals

Is there continuity?

YES—Replace the power tilt motor/position sensor (see page 17-25). ■

NO—Replace the power tilt/telescopic steering control unit. ■

DTC B1843: Power Seat Control Unit Lost Communication With Power Tilt/Telescopic Steering Control Unit (UART Line)

NOTE: If you are troubleshooting multiple DTCs, be sure to follow the instructions in B-CAN System Diagnosis Test Mode A (see page 22-131).

1. Clear the DTCs with the HDS.
2. Turn the ignition switch to LOCK (0), and then back to ON (II).
3. Check for DTCs with the HDS.

   Is DTC B1843 indicated?

   YES—Go to step 4.

   NO—Intermittent failure, the system is OK at this time. Check for loose or poor connections at the power seat control unit. ■
4. Move the tilt/telescopic steering in each direction with the tilt/telescopic switch.

   Does the tilt/telescopic steering move in each direction smoothly?

   YES—Go to step 5.

   NO—Go to step 10.
5. Turn the ignition switch to LOCK (0).
6. Disconnect power seat control unit connector A (40P).
7. Disconnect power tilt/telescopic steering control unit connector A (16P).

8. Check for continuity between power seat control unit connector A (40P) terminal No. 39 and power tilt/telescopic steering control unit connector A (16P) terminal No. 11.

POWER SEAT CONTROL UNIT CONNECTOR A (40P)
Wire side of female terminals

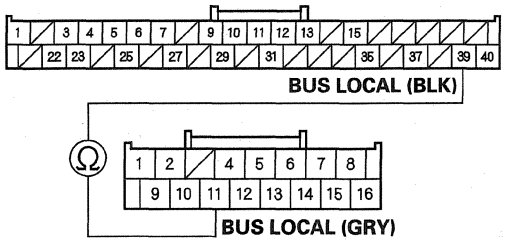

POWER TILT/TELESCOPIC STEERING CONTROL UNIT CONNECTOR A (16P)
Wire side of female terminals

Is there continuity?

YES—Go to step 9.

NO—Repair an open in the wire. ■

9. Check for continuity between power seat control unit connector A (40P) terminal No. 39 and body ground.

POWER SEAT CONTROL UNIT CONNECTOR A (40P)

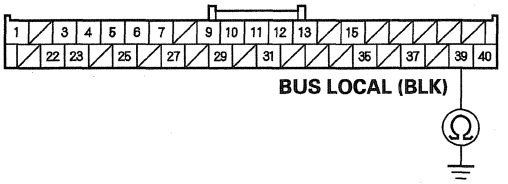

Wire side of female terminals

Is there continuity?

YES—Repair a short to ground in the wire. ■

NO—Substitute a known-good power tilt/telescopic steering control unit, and recheck. If DTC B1843 is still indicated, replace the power seat control unit. ■

10. Turn the ignition switch to LOCK (0).

11. Disconnect power tilt/telescopic steering control unit connectors A (16P) and B (8P).

12. Turn the ignition switch to ON (II).

13. Measure the voltage between power tilt/telescopic steering control unit connector A (16P) terminal No. 9 and connector B (8P) terminal No. 1, and between connector A (16P) terminal No. 1 and connector B (8P) terminal No. 1.

POWER TILT/TELESCOPIC STEERING CONTROL UNIT CONNECTOR A (16P)
Wire side of female terminals

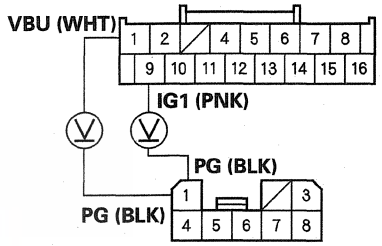

POWER TILT/TELESCOPIC STEERING CONTROL UNIT CONNECTOR B (8P)
Wire side of female terminals

Is there battery voltage?

YES—Replace the power tilt/telescopic steering control unit. ■

NO—Do the power tilt/telescopic steering control unit input test (see page 22-568). ■

DTC Troubleshooting (cont'd)

DTC B1844: Power Seat Slide Switch Circuit Malfunction

NOTE: If you are troubleshooting multiple DTCs, be sure to follow the instructions in B-CAN System Diagnosis Test Mode A (see page 22-131).

1. Clear the DTCs with the HDS.
2. Turn the ignition switch to LOCK (0), and then back to ON (II).
3. Operate the slide switch in each direction for at least 1 second.
4. Check for DTCs with the HDS.

   Is DTC B1844 indicated?

   YES—Go to step 5.

   NO—Intermittent failure, the driving position memory system is OK at this time. Check for loose or poor connections at the power seat control unit connectors. ■
5. Turn the ignition switch to LOCK (0).
6. Disconnect power seat control unit connector A (40P).
7. Disconnect the power seat adjustment switch 12P connector and C901 under the driver's seat.
8. Check for continuity between body ground and power seat control unit connector A (40P) terminals No. 1, No. 7, and No. 27 individually.

POWER SEAT CONTROL UNIT CONNECTOR A (40P)

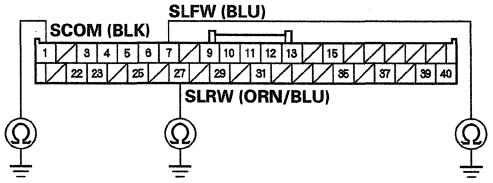

Wire side of female terminals

Is there continuity?

YES—Repair a short to ground in the wire. ■

NO—Go to step 9.

9. Check for continuity between these power seat control unit connector A (40P) terminals:

   - No. 1 and No. 7
   - No. 1 and No. 27
   - No. 7 and No. 27

POWER SEAT CONTROL UNIT CONNECTOR A (40P)

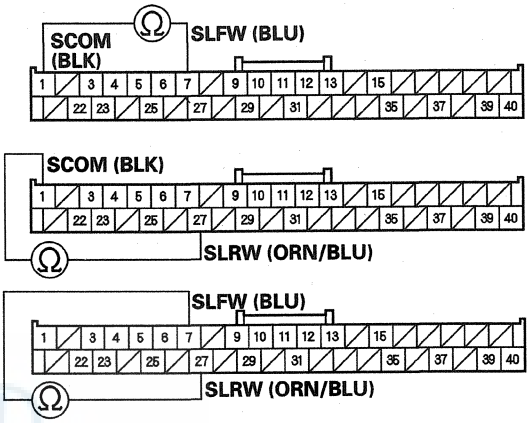

Wire side of female terminals

Is there continuity?

YES—Repair a short in the wire. ■

NO—Go to step 10.

10. Do the power seat adjustment switch test (see page 22-571).

    Is the switch OK?

    YES—Replace the power seat control unit. ■

    NO—Replace the power seat adjustment switch. ■

DTC B1845: Power Seat Recline Switch Circuit Malfunction

NOTE: If you are troubleshooting multiple DTCs, be sure to follow the instructions in B-CAN System Diagnosis Test Mode A (see page 22-131).

1. Clear the DTCs with the HDS.
2. Turn the ignition switch to LOCK (0), and then back to ON (II).
3. Operate the recline switch in each direction for at least 1 second.
4. Check for DTCs with the HDS.

   Is DTC B1845 indicated?

   YES—Go to step 5.

   NO—Intermittent failure, the driving position memory system is OK at this time. Check for loose or poor connections at the power seat control unit connectors. ■
5. Turn the ignition switch to LOCK (0).
6. Disconnect power seat control unit connector A (40P).
7. Disconnect the power seat adjustment switch 12P connector and C901 under the driver's seat.
8. Check for continuity between body ground and power seat control unit connector A (40P) terminals No. 1, No. 6, and No. 25 individually.

POWER SEAT CONTROL UNIT CONNECTOR A (40P)

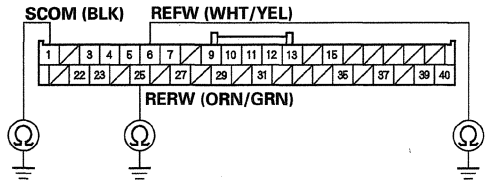

Wire side of female terminals

Is there continuity?

YES—Repair a short to ground in the wire. ■

NO—Go to step 9.

9. Check for continuity between these power seat control unit connector A (40P) terminals:

   - No. 1 and No. 6
   - No. 1 and No. 25
   - No. 6 and No. 25

POWER SEAT CONTROL UNIT CONNECTOR A (40P)

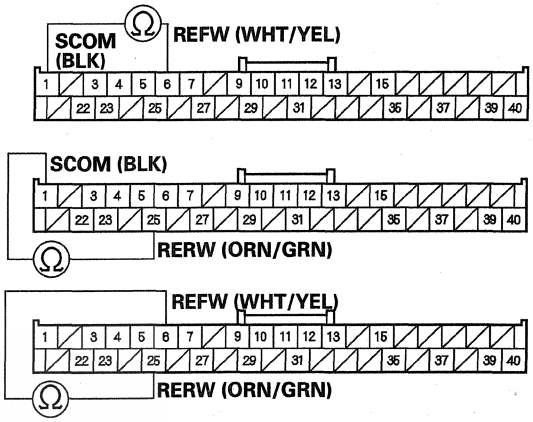

Wire side of female terminals

Is there continuity?

YES—Repair a short in the wire. ■

NO—Go to step 10.

10. Do the power seat adjustment switch test (see page 22-571).

    Is the switch OK?

    YES—Replace the power seat control unit. ■

    NO—Replace the power seat adjustment switch. ■

DTC Troubleshooting (cont'd)

DTC B1846: Power Seat Front Up-Down Switch Circuit Malfunction

NOTE: If you are troubleshooting multiple DTCs, be sure to follow the instructions in B-CAN System Diagnosis Test Mode A (see page 22-131).

1. Clear the DTCs with the HDS.
2. Turn the ignition switch to LOCK (0), and then back to ON (II).
3. Operate the front up-down switch in each direction for at least 1 second.
4. Check for DTCs with the HDS.

   Is DTC B1846 indicated?

   YES—Go to step 5.

   NO—Intermittent failure, the driving position memory system is OK at this time. Check for loose or poor connections at the power seat control unit connectors. ■
5. Turn the ignition switch to LOCK (0).
6. Disconnect power seat control unit connector A (40P).
7. Disconnect the power seat adjustment switch 12P connector and C901 under the driver's seat.
8. Check for continuity between body ground and power seat control unit connector A (40P) terminals No. 1, No. 4, and No. 5 individually.

POWER SEAT CONTROL UNIT CONNECTOR A (40P)

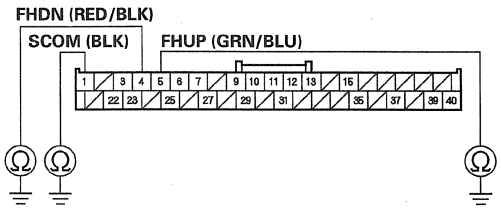

Wire side of female terminals

Is there continuity?

YES—Repair a short to ground in the wire. ■

NO—Go to step 9.

9. Check for continuity between these power seat control unit connector A (40P) terminals:

   - No. 1 and No. 4
   - No. 1 and No. 5
   - No. 4 and No. 5

POWER SEAT CONTROL UNIT CONNECTOR A (40P)

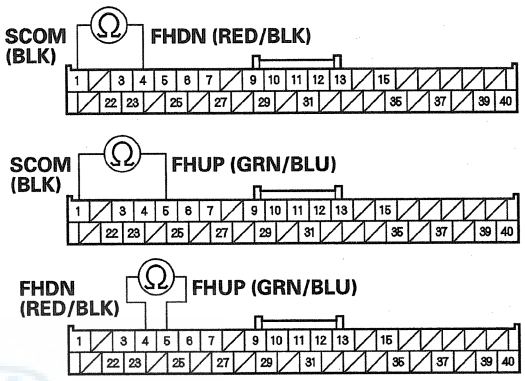

Wire side of female terminals

Is there continuity?

YES—Repair a short in the wire. ■

NO—Go to step 10.

10. Do the power seat adjustment switch test (see page 22-571).

    Is the switch OK?

    YES—Replace the power seat control unit. ■

    NO—Replace the power seat adjustment switch. ■

DTC B1847: Power Seat Rear Up-Down Switch Circuit Malfunction

NOTE: If you are troubleshooting multiple DTCs, be sure to follow the instructions in B-CAN System Diagnosis Test Mode A (see page 22-131).

1. Clear the DTCs with the HDS.
2. Turn the ignition switch to LOCK (0), and then back to ON (II).
3. Operate the rear up-down switch in each direction for at least 1 second.
4. Check for DTCs with the HDS.

   Is DTC B1847 indicated?

   YES—Go to step 5.

   NO—Intermittent failure, the driving position memory system is OK at this time. Check for loose or poor connections at the power seat control unit connectors. ■
5. Turn the ignition switch to LOCK (0).
6. Disconnect power seat control unit connector A (40P).
7. Disconnect the power seat adjustment switch 12P connector and C901 under the driver's seat.
8. Check for continuity between body ground and power seat control unit connector A (40P) terminals No. 1, No. 3, and No. 23 individually.

POWER SEAT CONTROL UNIT CONNECTOR A (40P)

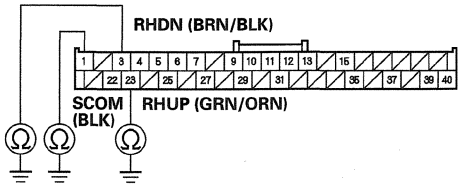

Wire side of female terminals

Is there continuity?

YES—Repair a short to ground in the wire. ■

NO—Go to step 9.

9. Check for continuity between these power seat control unit connector A (40P) terminals:

   - No. 1 and No. 3
   - No. 1 and No. 23
   - No. 3 and No. 23

POWER SEAT CONTROL UNIT CONNECTOR A (40P)

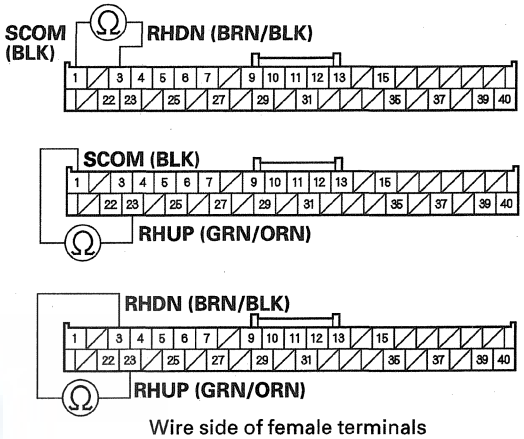

Wire side of female terminals

Is there continuity?

YES—Repair a short in the wire. ■

NO—Go to step 10.

10. Do the power seat adjustment switch test (see page 22-571).

    Is the switch OK?

    YES—Replace the power seat control unit. ■

    NO—Replace the power seat adjustment switch. ■

DTC Troubleshooting (cont'd)

DTC B2182: Left Power Mirror Horizontal Sensor Signal Error

NOTE: If you are troubleshooting multiple DTCs, be sure to follow the instructions in B-CAN System Diagnosis Test Mode A (see page 22-131).

1. Clear the DTCs with the HDS.
2. Turn the ignition switch to LOCK (0), and then back to ON (II).
3. Move the left power mirror in each direction with the power mirror switch.
4. Check for DTCs with the HDS.

   Is DTC B2182 indicated?

   YES—Go to step 5.

   NO—Intermittent failure, the system is OK at this time. Check for loose or poor connections. ■
5. Select POWER SEAT/POWER MIRROR from the BODY ELECTRICAL menu, and enter DATA LIST.
6. Check the NORMAL/ABNORMAL information of the DRIVER DOOR MIRROR HORIZONTAL SENSOR in DATA LIST.

   Is the information indicator ABNORMAL?

   YES—Go to step 7.

   NO—Replace the driver's MPCS unit. ■
7. Turn the ignition switch to LOCK (0).
8. Disconnect driver's MPCS unit connector A (40P).
9. Disconnect the left power mirror 16P connector.
10. Check for continuity between driver's MPCS unit connector A (40P) terminal No. 10 and left power mirror 16P connector terminal No. 4.

LEFT POWER MIRROR 16P CONNECTOR
Terminal side of male terminals

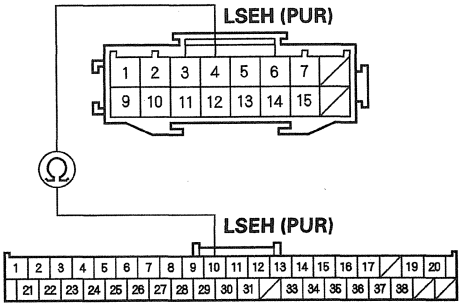

DRIVER'S MPCS UNIT CONNECTOR A (40P)
Wire side of female terminals

Is there continuity?

YES—Go to step 11.

NO—Repair an open in the wire. ■

11. Check for continuity between left power mirror 16P connector terminal No. 4 and body ground.

LEFT POWER MIRROR 16P CONNECTOR

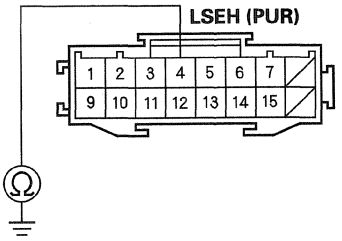

Terminal side of male terminals

Is there continuity?

YES—Repair a short to ground in the wire. ■

NO—Go to step 12.

12. Check for continuity between left power mirror 16P connector terminals No. 4 and No. 12.

LEFT POWER MIRROR 16P CONNECTOR

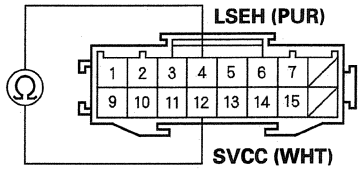

Terminal side of male terminals

Is there continuity?

YES—Repair a short in the wires. ■

NO—Go to step 13.

13. Reconnect driver's MPCS unit connector A (40P).
14. Turn the ignition switch to ON (II).
15. Measure the voltage between left power mirror 16P connector terminal No. 4 and body ground.

LEFT POWER MIRROR 16P CONNECTOR

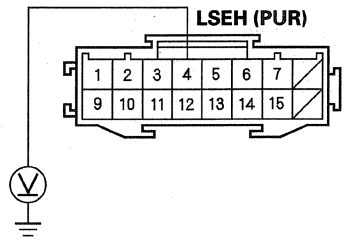

Terminal side of male terminals

Is there about 5 V?

YES—Replace the left power mirror. ■

NO—Replace the driver's MPCS unit. ■

DTC B2183: Left Power Mirror Vertical Sensor Signal Error

NOTE: If you are troubleshooting multiple DTCs, be sure to follow the instructions in B-CAN System Diagnosis Test Mode A (see page 22-131).

1. Clear the DTCs with the HDS.
2. Turn the ignition switch to LOCK (0), and then back to ON (II).
3. Move the left power mirror in each direction with the power mirror switch.
4. Check for DTCs with the HDS.

   Is DTC B2183 indicated?

   YES—Go to step 5.

   NO—Intermittent failure, the system is OK at this time. Check for loose or poor connections. ■
5. Select POWER SEAT/POWER MIRROR from the BODY ELECTRICAL menu, and enter DATA LIST.
6. Check the NORMAL/ABNORMAL information of the DRIVER DOOR MIRROR VERTICAL SENSOR in DATA LIST.

   Is the information indicator ABNORMAL?

   YES—Go to step 7.

   NO—Replace the driver's MPCS unit. ■
7. Turn the ignition switch to LOCK (0).
8. Disconnect driver's MPCS unit connector A (40P).
9. Disconnect the left power mirror 16P connector.

(cont'd)

DTC Troubleshooting (cont'd)

10. Check for continuity between driver's MPCS unit connector A (40P) terminal No. 9 and left power mirror 16P connector terminal No. 11.

LEFT POWER MIRROR 16P CONNECTOR
Terminal side of male terminals

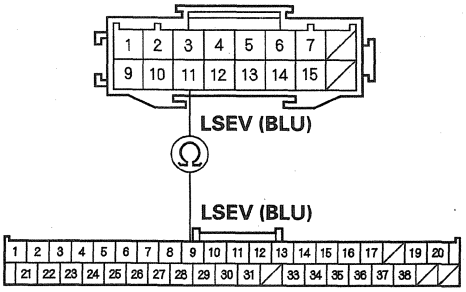

DRIVER'S MPCS UNIT CONNECTOR A (40P)
Wire side of female terminals

Is there continuity?

YES—Go to step 11.

NO—Repair an open in the wire. ■

11. Check for continuity between left power mirror 16P connector terminal No. 11 and body ground.

LEFT POWER MIRROR 16P CONNECTOR

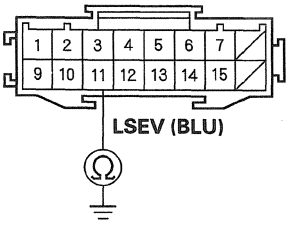

Terminal side of male terminals

Is there continuity?

YES—Repair a short to ground in the wire. ■

NO—Go to step 12.

12. Check for continuity between left power mirror 16P connector terminals No. 11 and No. 12.

LEFT POWER MIRROR 16P CONNECTOR

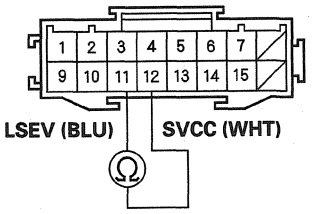

Terminal side of male terminals

Is there continuity?

YES—Repair a short in the wires. ■

NO—Go to step 13.

13. Reconnect driver's MPCS unit connector A (40P).
14. Turn the ignition switch to ON (II).
15. Measure the voltage between left power mirror 16P connector terminal No. 11 and body ground.

LEFT POWER MIRROR 16P CONNECTOR

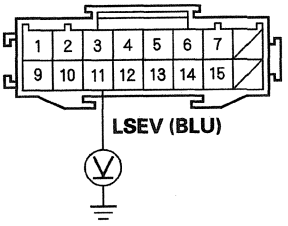

Terminal side of male terminals

Is there about 5 V?

YES—Replace the left power mirror. ■

NO—Replace the driver's MPCS unit. ■

DTC B2184: Right Power Mirror Horizontal Sensor Signal Error

NOTE: If you are troubleshooting multiple DTCs, be sure to follow the instructions in B-CAN System Diagnosis Test Mode A (see page 22-131).

1. Clear the DTCs with the HDS.
2. Turn the ignition switch to LOCK (0), and then back to ON (II).
3. Move the right power mirror in each direction with the power mirror switch.
4. Check for DTCs with the HDS.

   Is DTC B2184 indicated?

   YES—Go to step 5.

   NO—Intermittent failure, the system is OK at this time. Check for loose or poor connections. ■
5. Select POWER SEAT/POWER MIRROR from the BODY ELECTRICAL menu, and enter DATA LIST.
6. Check the NORMAL/ABNORMAL information of the ASSISTANT DOOR MIRROR HORIZONTAL SENSOR in DATA LIST.

   Is the information indicator ABNORMAL?

   YES—Go to step 7.

   NO—Replace the front passenger's MPCS unit. ■
7. Turn the ignition switch to LOCK (0).
8. Disconnect front passenger's MPCS unit connector A (28P).
9. Disconnect the right power mirror 16P connector.
10. Check for continuity between front passenger's MPCS unit connector A (28P) terminal No. 6 and right power mirror 16P connector terminal No. 4.

RIGHT POWER MIRROR 16P CONNECTOR
Terminal side of male terminals

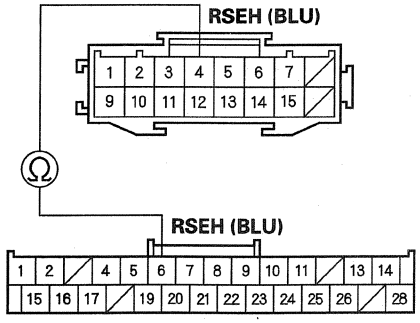

FRONT PASSENGER'S MPCS UNIT CONNECTOR A (28P)
Wire side of female terminals

Is there continuity?

YES—Go to step 11.

NO—Repair an open in the wire. ■

11. Check for continuity between right power mirror 16P connector terminal No. 4 and body ground.

RIGHT POWER MIRROR 16P CONNECTOR

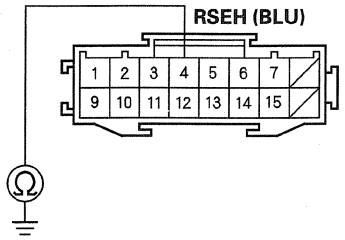

Terminal side of male terminals

Is there continuity?

YES—Repair a short to ground in the wire. ■

NO—Go to step 12.

(cont'd)

DTC Troubleshooting (cont'd)

12. Check for continuity between right power mirror 16P connector terminals No. 4 and No. 12.

RIGHT POWER MIRROR 16P CONNECTOR

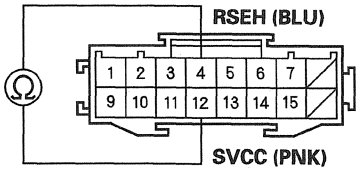

Terminal side of male terminals

Is there continuity?

YES—Repair a short in the wires. ■

NO—Go to step 13.

13. Reconnect front passenger's MPCS unit connector A (28P).
14. Turn the ignition switch to ON (II).
15. Measure the voltage between right power mirror 16P connector terminal No. 4 and body ground.

RIGHT POWER MIRROR 16P CONNECTOR

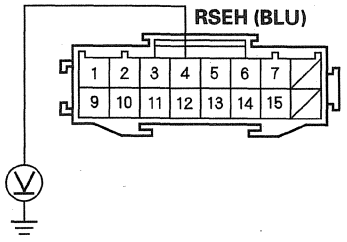

Terminal side of male terminals

Is there about 5 V?

YES—Replace the right power mirror. ■

NO—Replace the front passenger's MPCS unit. ■

DTC B2185: Right Power Mirror Vertical Sensor Signal Error

NOTE: If you are troubleshooting multiple DTCs, be sure to follow the instructions in B-CAN System Diagnosis Test Mode A (see page 22-131).

1. Clear the DTCs with the HDS.
2. Turn the ignition switch to LOCK (0), and then back to ON (II).
3. Move the right power mirror in each direction with the power mirror switch.
4. Check for DTCs with the HDS.

   Is DTC B2185 indicated?

   YES—Go to step 5.

   NO—Intermittent failure, the system is OK at this time. Check for loose or poor connections. ■
5. Select POWER SEAT/POWER MIRROR from the BODY ELECTRICAL menu, and enter DATA LIST.
6. Check the NORMAL/ABNORMAL information of the ASSISTANT DOOR MIRROR VERTICAL SENSOR in DATA LIST.

   Is the information indicator ABNORMAL?

   YES—Go to step 7.

   NO—Replace the front passenger's MPCS unit. ■
7. Turn the ignition switch to LOCK (0).
8. Disconnect front passenger's MPCS unit connector A (28P).
9. Disconnect the right power mirror 16P connector.

10. Check for continuity between front passenger's MPCS unit connector A (28P) terminal No. 5 and right power mirror 16P connector terminal No. 11.

RIGHT POWER MIRROR 16P CONNECTOR
Terminal side of male terminals

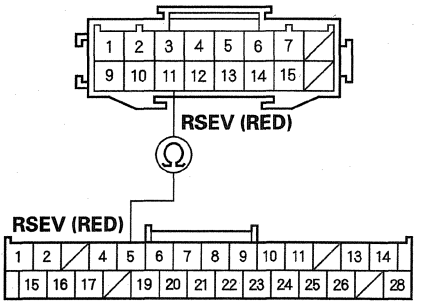

FRONT PASSENGER'S MPCS UNIT CONNECTOR A (28P)
Wire side of female terminals

Is there continuity?

YES—Go to step 11.

NO—Repair an open in the wire. ■

11. Check for continuity between right power mirror 16P connector terminal No. 11 and body ground.

RIGHT POWER MIRROR 16P CONNECTOR

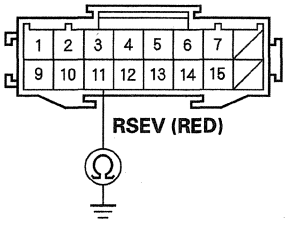

Terminal side of male terminals

Is there continuity?

YES—Repair a short to ground in the wire. ■

NO—Go to step 12.

12. Check for continuity between right power mirror 16P connector terminals No. 11 and No. 12.

RIGHT POWER MIRROR 16P CONNECTOR

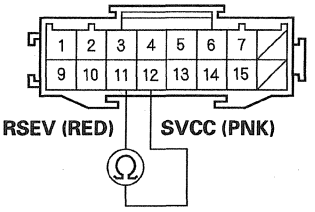

Terminal side of male terminals

Is there continuity?

YES—Repair a short in the wires. ■

NO—Go to step 13.

13. Reconnect front passenger's MPCS unit connector A (28P).

14. Turn the ignition switch to ON (II).

15. Measure the voltage between right power mirror 16P connector terminal No. 11 and body ground.

RIGHT POWER MIRROR 16P CONNECTOR

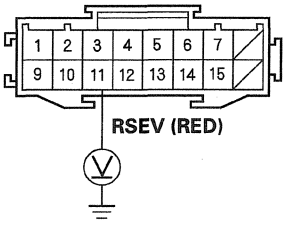

Terminal side of male terminals

Is there about 5 V?

YES—Replace the right power mirror. ■

NO—Replace the front passenger's MPCS unit. ■

System Input Test and Function Test

1. Connect the HDS to the DLC.
2. Turn the ignition switch to ON (II).
3. From the BODY ELECTRICAL menu, select POWER SEAT/POWER MIRROR, then DTCs.
   - If DTCs are found, troubleshoot the DTCs using B-CAN System Diagnosis Test Mode A (see page 22-131).
   - If no DTCs are found, go to step 4.
4. Exit the DTC mode, and select the DATA LIST from the POWER SEAT/POWER MIRROR TEST MODE MENU.
5. Test each input and monitor each output:
   - If the data list indication is correct, continue to the next switch. If all switches are OK, go to step 6.
   - If the data list indication is not correct, do the appropriate test at the control unit and terminal indicated in the table.
     - Voltage drop tests should be done with the ignition switch to ON (II), all the connectors connected, and the meter negative test lead attached to a good body ground.
     - Continuity tests should be done with the ignition switch to LOCK (0) and the indicated terminals disconnected.

Data List Input/ Command	Condition: Data List Indication	Control Unit/Terminal Number/Test (If applicable)	Possible cause if desired result is not obtained
Door Mirror UP Switch	Mirror select switch in LEFT, then RIGHT Mirror up switch pressed: ON Mirror up switch released: OFF	MICU/P9 (WHT) Mirror select switch UP: 0 V Center or DOWN: 5 V	• Faulty switch (see page 22-454) • An open in the wire • A short to ground in the wire • Faulty control unit
Door Mirror Select in LEFT selection	Mirror select switch in LEFT position: ON Select switch in CENTER or RIGHT position: OFF	MICU/P11 (PUR) Mirror select switch LEFT: 0 V Center or RIGHT: 5 V	• Faulty switch (see page 22-454) • An open in the wire • A short to ground in the wire • Faulty control unit
Door Mirror DOWN Switch	Mirror select switch in LEFT, then RIGHT Mirror down switch pressed: ON Mirror switch released: OFF	MICU/P10 (PNK) Mirror select switch DOWN: 0 V Center or UP: 5 V	• Faulty switch (see page 22-454) • An open in the wire • A short to ground in the wire • Faulty control unit
Door Mirror Select in Right selection	Mirror select switch in RIGHT position: ON Select switch in CENTER or LEFT position: OFF	MICU/P22 (GRY) Mirror select switch RIGHT: 0 V Center or LEFT: 5 V	• Faulty switch (see page 22-454) • An open in the wire • A short to ground in the wire • Faulty control unit
Door Mirror LEFT Switch	Mirror select switch in LEFT, then RIGHT Mirror left switch pressed: ON Mirror switch released: OFF	MICU/P25 (GRN) Mirror select switch LEFT: 0 V Center or RIGHT: 5 V	• Faulty switch (see page 22-454) • An open in the wire • A short to ground in the wire • Faulty control unit
Door Mirror RIGHT Switch	Mirror select switch in LEFT, then RIGHT Mirror right switch pressed: ON Mirror switch released: OFF	MICU/P26 (BLU) Mirror select switch RIGHT: 0 V Center or LEFT: 5 V	• Faulty switch (see page 22-454) • An open in the wire • A short to ground in the wire • Faulty control unit

Data List Input/ Command	Condition: Data List Indication	Control Unit/Terminal Number/ Test (If applicable)	Possible cause if desired result is not obtained
Slide Switch Forward	Slide switch forward: ON Switch released: OFF	Power seat control unit/A1, A7 (BLU) Slide switch forward: 0 V Switch released: 5 V	• Faulty switch (see page 22-571) • An open in the wire • A short to ground in the wire • Faulty control unit
Slide Switch Rearward	Slide switch rearward: ON Switch released: OFF	Power seat control unit/A1, A27 (ORN/BLU) Slide switch rearward: 0 V Switch released: 5 V	• Faulty switch (see page 22-571) • An open in the wire • A short to ground in the wire • Faulty control unit
Recline Switch Forward	Recline switch forward: ON Switch released: OFF	Power seat control unit/A1, A6 (WHT/YEL) Recline switch forward: 0 V Switch released: 5 V	• Faulty switch (see page 22-571) • An open in the wire • A short to ground in the wire • Faulty control unit
Recline Switch Rearward	Recline switch rearward: ON Switch released: OFF	Power seat control unit/A1, A25 (ORN/GRN) Recline switch rearward: 0 V Switch released: 5 V	• Faulty switch (see page 22-571) • An open in the wire • A short to ground in the wire • Faulty control unit
Front Up-Down Switch Up	Front up-down switch up: ON Switch released: OFF	Power seat control unit/A1, A5 (GRN/BLU) Front up-down switch up: 0 V Switch released: 5 V	• Faulty switch (see page 22-571) • An open in the wire • A short to ground in the wire • Faulty control unit
Front Up-Down Switch Down	Front up-down switch down: ON Switch released: OFF	Power seat control unit/A1, A4 (RED/BLK) Front up-down switch down: 0 V Switch released: 5 V	• Faulty switch (see page 22-571) • An open in the wire • A short to ground in the wire • Faulty control unit
Rear Up-Down Switch Up	Rear up-down switch up: ON Switch released: OFF	Power seat control unit/A1, A23 (GRN/ORN) Rear up-down switch up: 0 V Switch released: 5 V	• Faulty switch (see page 22-571) • An open in the wire • A short to ground in the wire • Faulty control unit
Rear Up-Down Switch Down	Rear up-down switch down: ON Switch released: OFF	Power seat control unit/A1, A3 (BRN/BLK) Rear up-down switch up: 0 V Switch released: 5 V	• Faulty switch (see page 22-571) • An open in the wire • A short to ground in the wire • Faulty control unit
Ignition Switch for Power Seat Control	Ignition switch ON (II): ON Ignition switch LOCK (0): OFF	Power seat control unit/A35 (BLK/YEL) Ignition switch ON (II): 12 V	• Blown No. 21 (10 A) fuse in the driver's under-dash fuse/relay box • An open in the wire • Faulty control unit
A/T Gear Position Switch (P)	Transmission range switch P position: ON Any other position than P: OFF	Power seat control unit/A31 (BLK/BLU) Transmission range switch P: 0 V	• Faulty transmission range switch • An open in the wire • Faulty control unit
Seat MEMO Switch	Seat MEMO switch pressed: ON Switch released: OFF	Driver's MPCS unit/A31 (ORN) Seat MEMO switch pressed: 0 V Switch released: at least 5 V	• Faulty switch (see page 22-570) • An open in the wire • A short to ground in the wire • Faulty control unit • Poor ground (G601)
Driver 1 Position Switch	Driver position 1 switch pressed: ON Switch released: OFF	Driver's MPCS unit/A29 (GRN) Driver's position 1 switch pressed: 0 V Switch released: at least 5 V	• Faulty switch (see page 22-570) • An open in the wire • A short to ground in the wire • Faulty control unit • Poor ground (G601)
Driver 2 Position Switch	Driver position 2 switch pressed: ON Switch released: OFF	Driver's MPCS unit/A30 (RED) Driver's position 2 switch pressed: 0 V Switch released: at least 5 V	• Faulty switch (see page 22-570) • An open in the wire • A short to ground in the wire • Faulty control unit • Poor ground (G601)

(cont'd)

System Input Test and Function Test (cont'd)

Data List Input/ Command	Condition: Data List Indication	Control Unit/Terminal Number/ Test (If applicable)	Possible cause if desired result is not obtained
Column Tilt Up Switch	Steering tilt switch up: ON Switch released: OFF	Power tilt/telescopic steering control unit/A15 (BRN), A7 (LT GRN) Switch in TILT UP: 0 V Switch released: Battery voltage	• Faulty switch (see page 22-574) • An open in the wire • A short to ground in the wire • Faulty control unit
Column Tilt Down Switch	Steering tilt switch down: ON Switch released: OFF	Power tilt/telescopic steering control unit/A15 (BRN), A6 (GRN) Switch in TILT DOWN: 0 V Switch released: Battery voltage	• Faulty switch (see page 22-574) • An open in the wire • A short to ground in the wire • Faulty control unit
Column Telescopic Pull Switch	Steering telescopic switch pull: ON Switch released: OFF	Power tilt/telescopic steering control unit/A15 (BRN), A14 (PUR) Switch in TELESCOPIC PULL: 0 V Switch released: Battery voltage	• Faulty switch (see page 22-574) • An open in the wire • A short to ground in the wire • Faulty control unit
Column Telescopic Push Switch	Steering telescopic switch push: ON Switch released: OFF	Power tilt/telescopic steering control unit/A15 (BRN), A6 (GRN) Switch in TELESCOPIC PUSH: 0 V Switch released: Battery voltage	• Faulty switch (see page 22-574) • An open in the wire • A short to ground in the wire • Faulty control unit
Ignition Switch (ETS)	Ignition switch ON (II): ON Ignition switch LOCK (0): OFF	Power tilt/telescopic steering control unit/A9 (PNK) Ignition switch ON (II): Battery voltage	• Blown No. 21 (10 A) fuse in the driver's under-dash fuse/relay box • An open in the wire • Faulty control unit
Slide Sensor	Seat moving forward or rearward: ON Seat not moving: OFF	Power seat control unit/A11 (YEL/GRN) Pulses as seat moves: 2.5 V average	• Faulty sensor • An open in the wire • A short to ground in the wire • Faulty control unit
Front Up-Down Sensor	Seat front moving up/down: ON Seat not moving: OFF	Power seat control unit/A12 (YEL/BLK) Pulses as seat moves: 2.5 V average	• Faulty sensor • An open in the wire • A short to ground in the wire • Faulty control unit
Recline Sensor	Seat-back moving forward or rearward: ON Seat not moving: OFF	Power seat control unit/A10 (WHT/RED) Pulses as seat moves: 2.5 V average	• Faulty sensor • An open in the wire • A short to ground in the wire • Faulty control unit
Rear Up-Down Sensor	Seat rear moving up/down: ON Seat not moving: OFF	Power seat control unit/A13 (YEL/BLK) Pulses as seat moves: 2.5 V average	• Faulty sensor • An open in the wire • A short to ground in the wire • Faulty control unit
Column Tilt Sensor	Steering tilting up/down: ON Steering not moving: OFF	Power tilt/telescopic steering control unit/A4 (ORN), A12 (BLU) Pulses as steering moves: 2.5 V average	• Faulty sensor • An open in the wire • A short to ground in the wire • Faulty control unit
Column Telescopic Sensor	Steering telescopic pull/push: ON Steering not moving: OFF	Power tilt/telescopic steering control unit/A5 (LT BLU), A13 (YEL) Pulses as steering moves: 2.5 V average	• Faulty sensor • An open in the wire • A short to ground in the wire • Faulty control unit

Data List Input/ Command	Condition: Data List Indication	Control Unit/Terminal Number/ Test (If applicable)	Possible cause if desired result is not obtained
Left Mirror Horizontal Sensor	Left mirror moves left/right: NORMAL Left mirror does not move: ABNORMAL	Driver's MPCS unit/A10 (PUR), A19 (WHT) Left mirror moving from full left to full right: A10 (about 0.1 V to 4.5 V), A19 (5 V)	• Faulty sensor • An open in the wire • Faulty control unit
Left Mirror Vertical Sensor	Left mirror moves up/down: NORMAL Left mirror stopped: ABNORMAL	Driver's MPCS unit/A9 (BLU), A19 (WHT) Left mirror moving from full down to full up: A9 (about 0.1 V to 4.5 V), A19 (5 V)	• Faulty sensor • An open in the wire • Faulty control unit
Right Door Mirror Horizontal Sensor	Right mirror moves left/right: NORMAL Right mirror stopped: ABNORMAL	Front passenger's MPCS unit/A6 (BLU), A13 (PNK) Right mirror moving from full left to full right: A6 (about 0.1 V to 4.5 V), A13 (5 V)	• Faulty sensor • An open in the wire • Faulty control unit
Right Door Mirror Vertical Sensor	Right mirror moves up/down: NORMAL Right mirror stopped: ABNORMAL	Front passenger's MPCS unit/A5 (RED), A13 (PNK) Right mirror moving from full down to full up: A5 (about 0.1 V to 4.5 V), A13 (5 V)	• Faulty sensor • An open in the wire • Faulty control unit
DPMS MEM Switch	Driving position memory switch MEMO button pushed: ON Switch released: OFF	Driver's MPCS unit/A31 (ORN) Driving position memory switch MEMO button pushed: A31 (about 1 V or less) MEMO button released: A31 (5 V or more)	• Faulty switch (see page 22-570) • An open in the wire • A short to ground in the wire • Faulty control unit
DPMS POS1 Switch	Driving position memory switch POS1 button pushed: ON Switch released: OFF	Driver's MPCS unit/A29 (GRN) Driving position memory switch POS1 button pushed: A29 (about 1 V or more) POS1 button released: A29 (5 V or more)	• Faulty switch (see page 22-570) • An open in the wire • A short to ground in the wire • Faulty control unit
DPMS POS2 Switch	Driving position memory switch POS2 button pushed: ON Switch released: OFF	Driver's MPCS unit/A30 (RED) Driving position memory switch POS2 button pushed: A30 (about 1 V or more) POS2 button released: A30 (5 V or more)	• Faulty switch (see page 22-570) • An open in the wire • A short to ground in the wire • Faulty control unit

(cont'd)

System Input Test and Function Test (cont'd)

6. Exit the data list, and select function test.

7. Do each of the function tests listed in the table shown. The appropriate output should occur.

   - If the function operates normally, go to the next function test. If all function tests operate normally, the system is OK.
   - If the function does not occur, do the appropriate test at the control unit and terminal indicated in the table.
     – Voltage drop tests should be done with the ignition switch to ON (II) and all the connectors connected.
     – Continuity tests should be done with the ignition switch to LOCK (0) and the indicated terminals disconnected.
     – Jumper tests should be done according to the instructions indicated.
   - If the test indicates that the component operates normally, but the function will not operate by doing the function test or the normal use of the component, the control unit that operates that function must be faulty; replace it.
   - If the test indicates that the component does not operate normally, check for an open or short in the harnesses between the component and control unit. If the harness is OK, replace the component.

Function Test	Component and Operation	Control Unit/Terminal Number/Test (If applicable)	Possible cause if desired result is not obtained
Power Seat: Slide Motor-Full Forward	Seat slides forward	Power seat control unit/B8 (BLU), A9 (BLK), B7 (WHT), B17 (YEL) Disconnect power seat control unit connectors A and B. Connect B8 to B17 and B7 to A9; driver's seat should slide forward.	• Faulty motor • An open in the wire • A short to ground in the wire
Power Seat: Slide Motor-Full Rearward	Seat slides rearward	Power seat control unit/B8 (BLU), A9 (BLK), B7 (WHT), B17 (YEL) Disconnect power seat control unit connectors A and B. Connect B8 to B7 and B17 to A9; driver's seat should slide rearward.	• Faulty motor • An open in the wire • A short to ground in the wire
Power Seat: Front UP-DOWN Motor-Full Up	Front of seat moves up	Power seat control unit/B8 (BLU), A9 (BLK), B6 (BRN/WHT), B16 (ORN) Disconnect power seat control unit connectors A and B. Connect B8 to B16 and B6 to A9; front of driver's seat should move up.	• Faulty motor • An open in the wire • A short to ground in the wire
Power Seat: Front UP-DOWN Motor-Full Down	Front of seat moves down	Power seat control unit/B8 (BLU), A9 (BLK), B6 (BRN/WHT), B16 (ORN) Disconnect power seat control unit connectors A and B. Connect B8 to B6 and B16 to A9; front of driver's seat should move down.	• Faulty motor • An open in the wire • A short to ground in the wire
Power Seat: Rear Up-Down Motor-Full Up	Rear of seat moves up	Power seat control unit/B1 (RED), A9 (BLK), B2 (GRN), B10 (BLU/GRN) Disconnect power seat control unit connectors A and B. Connect B1 to B2 and B10 to A9; rear of driver's seat should move up.	• Faulty motor • An open in the wire • A short to ground in the wire
Power Seat: Rear Up-Down Motor-Full Down	Rear of seat moves down	Power seat control unit/B1 (RED), A9 (BLK), B2 (GRN), B10 (BLU/GRN) Disconnect power seat control unit connectors A and B. Connect B1 to B10 and B2 to A9; rear of driver's seat should move down.	• Faulty motor • An open in the wire • A short to ground in the wire
Power Seat: Recline Motor-Full Forward	Seat back moves forward	Power seat control unit/B1 (RED), A9 (BLK), B9 (RED), B11 (GRY) Disconnect power seat control unit connectors A and B. Connect B1 to B11 and B9 to A9; driver's seat back should move forward.	• Faulty motor • An open in the wire • A short to ground in the wire
Power Seat: Recline Motor-Full Rearward	Seat back moves rearward	Power seat control unit/B1 (RED), A9 (BLK), B9 (RED), B11 (GRY) Disconnect power seat control unit connectors A and B. Connect B1 to B9 and B11 to A9; driver's seat back should move rearward.	• Faulty motor • An open in the wire • A short to ground in the wire

Function Test	Component and Operation	Control Unit/Terminal Number/Test (If applicable)	Possible cause if desired result is not obtained
Column Tilt	Power tilt/telescopic steering tilts up	Power tilt/telescopic steering control unit/B1 (BLK), B3 (WHT), B7 (ORN), B8 (LT BLU) Disconnect tilt/telescopic steering control unit connectors A and B. Connect B3 to B7 and B1 to B8; steering tilts down.	• Faulty motor • An open in the wire • A short to ground in the wire
Column Tilt	Power tilt/telescopic steering tilts down	Power tilt/telescopic steering control unit/B1 (BLK), B3 (WHT), B7 (ORN), B8 (LT BLU) Disconnect tilt/telescopic steering control unit connectors A and B. Connect B3 to B8 and B1 to B7; steering tilts up.	• Faulty motor • An open in the wire • A short to ground in the wire
Column Telescopic	Power tilt/telescopic steering telescopic pull	Power tilt/telescopic steering control unit/B1 (BLK), B3 (WHT), B6 (PNK), B4 (LT GRN) Disconnect tilt/telescopic steering control unit connectors A and B. Connect B3 to B4 and B1 to B6; steering telescopic pull.	• Faulty motor • An open in the wire • A short to ground in the wire
Column Telescopic	Power tilt/telescopic steering telescopic push	Power tilt/telescopic steering control unit/B1 (BLK), B3 (WHT), B6 (PNK), B4 (LT GRN) Disconnect tilt/telescopic steering control unit connectors A and B. Connect B3 to B6 and B1 to B4; steering telescopic push.	• Faulty motor • An open in the wire • A short to ground in the wire

Power Seat Control Unit Input Test

NOTE: Power Seat Control Unit appears as "MEMORY SEAT CONTROL UNIT" on HDS display screen.

1. Turn the ignition switch to LOCK (0).
2. Remove the driver's seat (see page 20-114).

   NOTE: Be careful not to scratch the interior trim.
3. Disconnect the 40P connector (A) and 18P connector (B) from the power seat control unit (C).

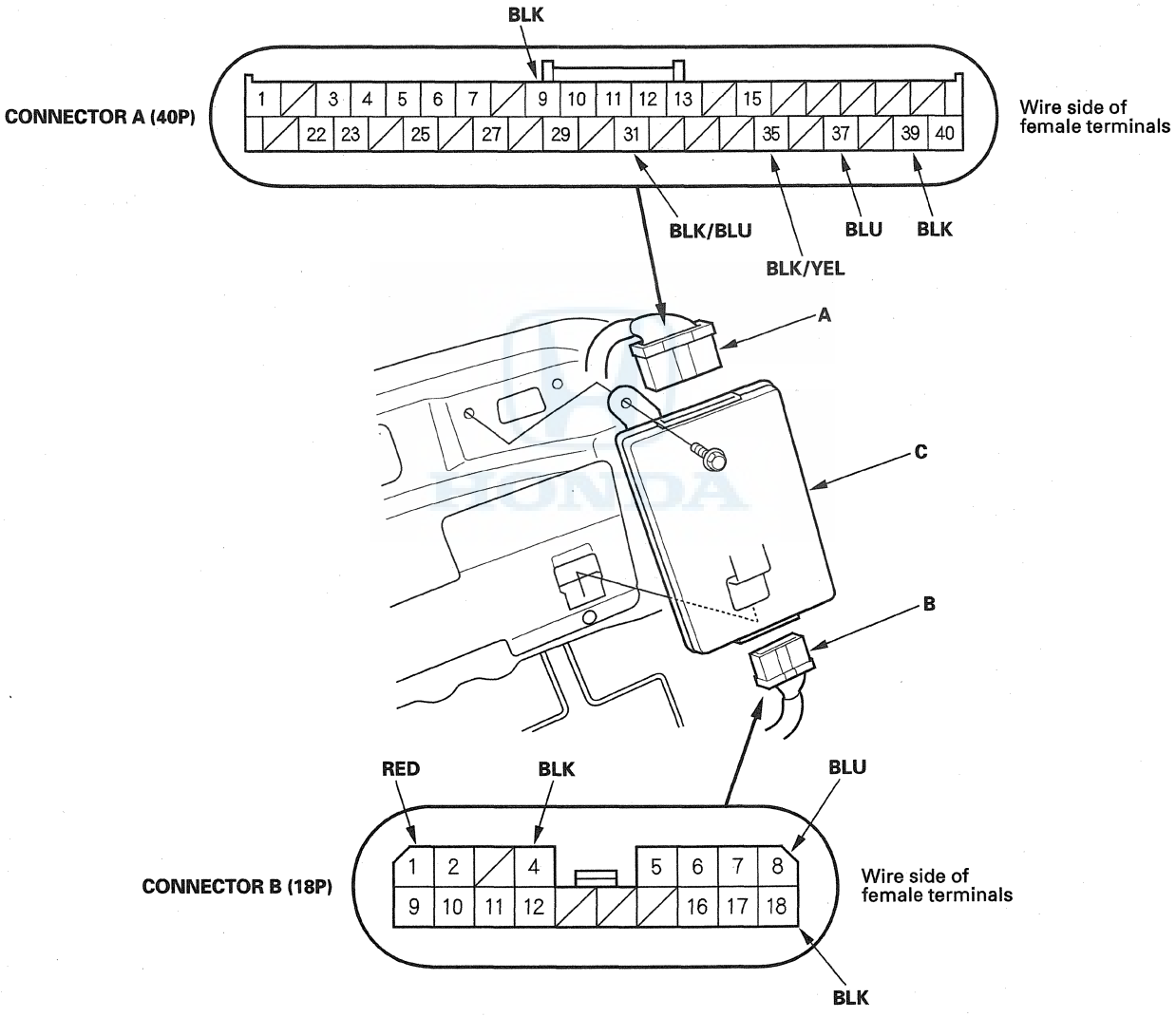

4. Inspect the connector and socket terminals to be sure they are all making good contact.

   - If the terminals are bent, loose or corroded, repair them as necessary, and recheck the system.
   - If the terminals look OK, go to step 5.

5. With the power seat control unit connectors still disconnected, disconnect power tilt/telescopic steering control unit connector A, and do these input tests at the following connectors.

   • If any test indicates a problem, find and correct the cause, then recheck the system.
   • If all the input tests prove OK, go to step 6.

Cavity	Wire	Test condition	Test: Desired result	Possible cause if desired result is not obtained
A39	BLK	Under all conditions	Check for continuity between the terminal A39 and power tilt/ telescopic steering control unit connector A (16P) terminal No. 11. There should be continuity.	An open in the wire

6. Reconnect the connectors and do these inputs tests at the following power seat control unit connectors.

   • If any test indicates a problem, find and correct the cause, then recheck the system.
   • If all the input tests prove OK, the control unit must be faulty; replace it.

Cavity	Wire	Test condition	Test: Desired result	Possible cause if desired result is not obtained
A9	BLK	Under all conditions	Measure the voltage to ground: There should be less than 0.2 V.	• Poor ground (G601) • An open in the wire
B4	BLK			
B18	BLK			
A35	BLK/YEL	Ignition switch ON (II)	Measure the voltage to ground: There should be battery voltage.	• Blown No. 21 (10 A) fuse in the driver's under-dash fuse/relay box • An open in the wire
A37	BLU	Under all conditions	Measure the voltage to ground: There should be battery voltage.	• Blown No. 15 (40 A) fuse in the under-hood fuse/relay box • Blown No. 7 (10 A) fuse in the driver's under-dash fuse/relay box • An open in the wire
B1	RED	Under all conditions	Measure the voltage to ground: There should be battery voltage.	• Blown No. 20 (40 A) fuse in the under-hood fuse/relay box • Blown No. 16 (20 A) fuse in the driver's under-dash fuse/relay box • An open in the wire
B8	BLU	Under all conditions	Measure the voltage to ground: There should be battery voltage.	• Blown No. 20 (40 A) fuse in the under-hood fuse/relay box • Blown No. 14 (20 A) fuse in the driver's under-dash fuse/relay box • An open in the wire
A31	BLK/BLU	Shift lever in P	Measure the voltage to ground: There should be less than 0.2 V.	• Faulty transmission range switch • An open in the wire
		Shift lever out of P	Measure the voltage to ground: There should be at least 5 V.	A short to ground in the wire

Power Mirror Circuit Input Test

MICU

1. Turn the ignition switch to LOCK (0).
2. Remove the left kick panel (see page 20-67).
3. Disconnect driver's under-dash fuse/relay box connector P (30P).

DRIVER'S UNDER-DASH FUSE/RELAY BOX CONNECTOR P (30P)

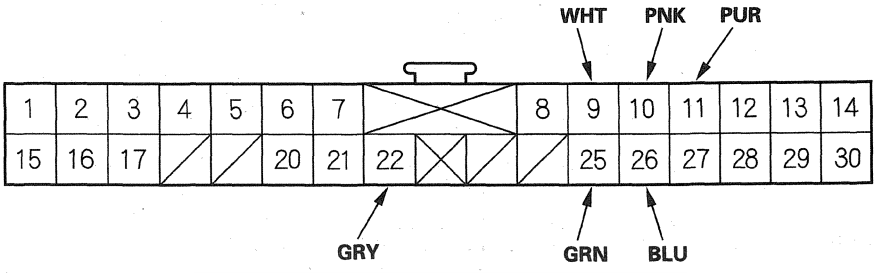

Wire side of female terminals

4. Inspect the connector and socket terminals to be sure they are all making good contact.
   - If the terminals are bent, loose or corroded, repair them as necessary, and recheck the system.
   - If the terminals look OK, go to step 5.

5. Reconnect the connector to the driver's under-dash fuse/relay box, turn the ignition switch to ON (II), and do these input tests at the following connector.

   - If any test indicates a problem, find and correct the cause, then recheck the system.
   - If all the input tests prove OK, go to step 6.

Cavity	Wire	Test condition	Test: Desired result	Possible cause if desired result is not obtained
P9	WHT	Power mirror switch in UP	Measure the voltage to ground: There should be less than 0.2 V.	• Poor ground (G501) • Faulty power mirror switch • An open in the wire
		Power mirror switch released	Measure the voltage to ground: There should be at least 5 V.	• Faulty power mirror switch • Faulty MICU
P10	PNK	Power mirror switch in DOWN	Measure the voltage to ground: There should be less than 0.2 V.	• Poor ground (G501) • Faulty power mirror switch • An open in the wire
		Power mirror switch released	Measure the voltage to ground: There should be at least 5 V.	• Faulty power mirror switch • Faulty MICU
P25	GRN	Power mirror switch in LEFT	Measure the voltage to ground: There should be less than 0.2 V.	• Poor ground (G501) • Faulty power mirror switch • An open in the wire
		Power mirror switch released	Measure the voltage to ground: There should be at least 5 V.	• Faulty power mirror switch • Faulty MICU
P26	BLU	Power mirror switch in RIGHT	Measure the voltage to ground: There should be less than 0.2 V.	• Poor ground (G501) • Faulty power mirror switch • An open in the wire
		Power mirror switch released	Measure the voltage to ground: There should be at least 5 V.	• Faulty power mirror switch • Faulty MICU
P11	PUR	Power mirror switch in L position	Measure the voltage to ground: There should be less than 0.2 V.	• Poor ground (G501) • Faulty power mirror switch • An open in the wire
		Power mirror switch released	Measure the voltage to ground: There should be at least 5 V.	• Faulty power mirror switch • Faulty MICU
P22	GRY	Power mirror switch in R position	Measure the voltage to ground: There should be less than 0.2 V.	• Poor ground (G501) • Faulty power mirror switch • An open in the wire
		Power mirror switch released	Measure the voltage to ground: There should be at least 5 V.	• Faulty power mirror switch • Faulty MICU

(cont'd)

Power Mirror Circuit Input Test (cont'd)

Driver's MPCS Unit

6. Turn the ignition switch to LOCK (0), and remove the driver's door panel (see page 20-9).
7. Disconnect driver's MPCS unit connector A (40P).

DRIVER'S MPCS UNIT CONNECTOR A (40P)

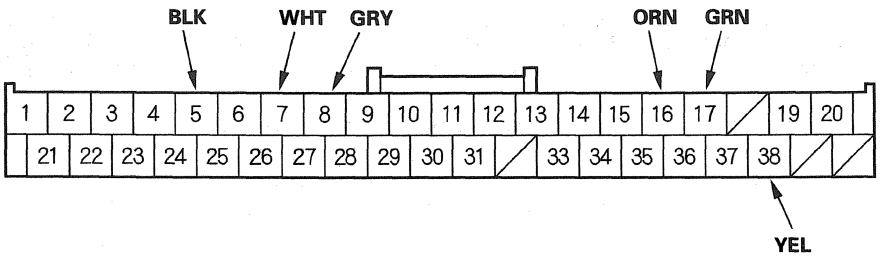

Wire side of female terminals

8. Inspect the connector and socket terminal to be sure they are all making good contact.
   - If the terminals are bent, loose or corroded, repair them as necessary, and recheck the system.
   - If the terminals look OK, go to step 9.
9. With the connector still disconnected, do these input tests at the following connector.
   - If any test indicates a problem, find and correct the cause, then recheck the system.
   - If all the input tests prove OK, go to step 10.

Cavity	Wire	Test condition	Test: Desired result	Possible cause if desired result is not obtained
A5*	BLK	Under all conditions	Measure the voltage to ground: There should be less than 0.2 V.	• Poor ground (G601) • Faulty power mirror switch • An open in the wire
A7*	WHT	Under all conditions	Measure the voltage to ground: There should be battery voltage.	• Blown No. 15 (40 A) fuse in the under-hood fuse/relay box • Blown No. 7 (10 A) fuse in the driver's under-dash fuse/relay box • An open in the wire
A8	GRY	Under all conditions	Check for continuity between the terminal A8 and front passenger's MPCS unit connector A (28P) terminal No. 4: There should be continuity.	• Faulty driver's under-dash fuse/relay box • Faulty passenger's under-dash fuse/relay box • An open in the wire
A16 A38	ORN YEL	Under all conditions	Connect the terminals A7 and A16, and terminals A5 and A38: The left power mirror moves UP.	• Faulty left power mirror actuator • An open in the wire
A17 A38	GRN YEL	Under all conditions	Connect the terminals A7 and A17, and terminals A5 and A38: The left power mirror swings LEFT.	• Faulty left power mirror actuator • An open in the wire

*: Reconnect the connector to the driver's MPCS unit.

Front Passenger's MPCS Unit

10. Remove the front passenger's door panel (see page 20-9).

11. Disconnect front passenger's MPCS unit connector A (28P).

FRONT PASSENGER'S MPCS UNIT CONNECTOR A (28P)

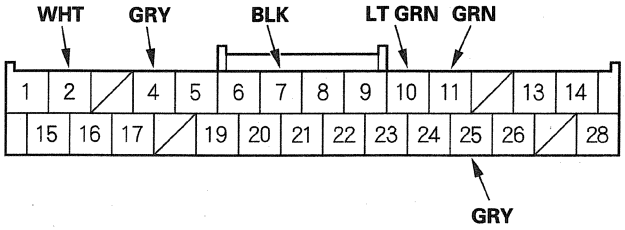

Wire side of female terminals

12. Inspect the connector and socket terminals to be sure they are all making good contact.

- If the terminals are bent, loose or corroded, repair them as necessary, and recheck the system.
- If the terminals look OK, go to step 13.

13. With the connector still disconnected, do these input tests at the following connector.

- If any test indicates a problem, find and correct the cause, then recheck the system.
- If all the input tests prove OK, go to step 14.

Cavity	Wire	Test condition	Test: Desired result	Possible cause if desired result is not obtained
A7*	BLK	Under all conditions	Measure the voltage to ground: There should be less than 0.2 V.	• Poor ground (G506) • Faulty power mirror switch • An open in the wire
A2*	WHT	Under all conditions	Measure the voltage to ground: There should be battery voltage.	• Blown No. 15 (40 A) fuse in the under-hood fuse/relay box • Blown No. 7 (10 A) fuse in the driver's under-dash fuse/relay box • An open in the wire
A4	GRY	Under all conditions	Check for continuity between the terminal A4 and driver's MPCS unit connector A (40P) terminal No. 8: There should be continuity.	• Faulty driver's under-dash fuse/relay box • Faulty passenger's under-dash fuse/relay box • An open in the wire
A10 A25	LT GRN GRY	Under all conditions	Connect the terminals A2 and A10, and terminals A7 and A25: The right power mirror moves UP.	• Faulty right power mirror actuator • An open in the wire
A11 A25	GRN GRY	Under all conditions	Connect the terminals A2 and A11, and terminals A7 and A25: The right power mirror swings RIGHT.	• Faulty right power mirror actuator • An open in the wire

*: Reconnect the connector to the front passenger's MPCS unit.

14. If multiple failures are found on more than one control unit, replace the driver's under-dash fuse/relay box (includes the MICU) (see page 22-88). If input failures are related to a particular control unit, replace the control unit.

Power Tilt/Telescopic Steering Control Unit Input Test

1. Turn the ignition switch to LOCK (0).
2. Remove the driver's dashboard undercover (see page 20-100) and the driver's dashboard lower cover (see page 20-100), then remove the steering column covers (see page 17-25).
3. Disconnected the 16P connector (A) and the 8P connector (B) from the power tilt/telescopic steering control unit (C).

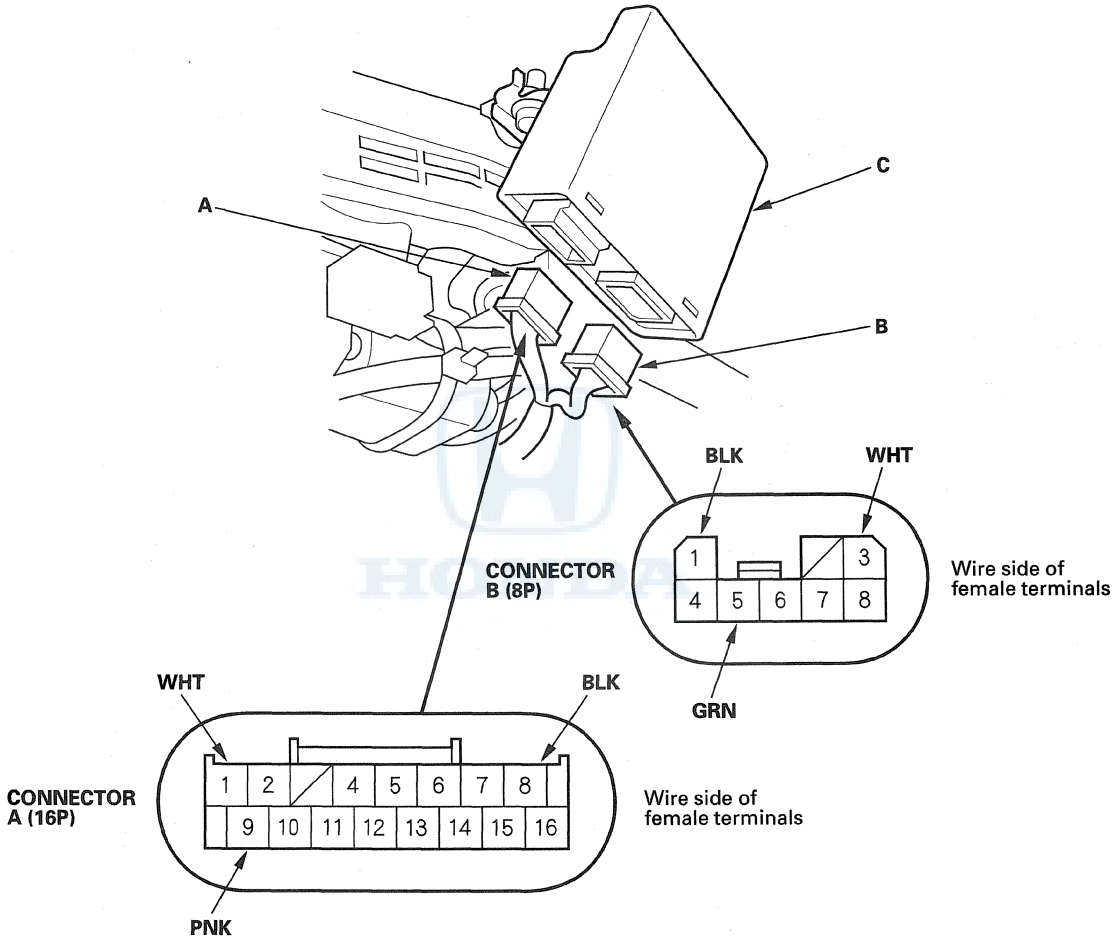

4. Inspect the connector and socket terminals to be sure they are all making good contact.
   - If the terminals are bent, loose or corroded, repair them as necessary, and recheck the system.
   - If the terminals look OK, go to step 5.

5. Reconnect the connectors to the power tilt/telescopic steering control unit, and do these input tests at the following connectors.

   - If any test indicates a problem, find and correct the cause, then recheck the system.
   - If all the input tests prove OK, the control unit must be faulty; replace it.

Cavity	Wire	Test condition	Test: Desired result	Possible cause if desired result is not obtained
A8 B1	BLK BLK	Under all conditions	Measure the voltage to ground: There should be less than 0.2 V.	• Poor ground (G501, G503) • An open in the wire
A1	WHT	Under all conditions	Measure the voltage to ground: There should be battery voltage.	• Blown No. 15 (40 A) fuse in the under-hood fuse/relay box • Blown No. 7 (10 A) fuse in the driver's under-dash fuse/relay box • An open in the wire
A9	PNK	Ignition switch ON (II)	Measure the voltage to ground: There should be battery voltage.	• Blown No. 21 (10 A) fuse in the driver's under-dash fuse/relay box • An open in the wire
B3	WHT	Under all conditions	Measure the voltage to ground: There should be battery voltage.	• Blown No. 23 (P/W) (50 A) fuse in the under-hood fuse/relay box • Blown No. 26 (20 A) fuse in the driver's under-dash fuse/relay box • An open in the wire
B5	GRN	Under all conditions	Measure the voltage to ground: There should be battery voltage.	• Blown No. 23 (P/W) (50 A) fuse in the under-hood fuse/relay box • Blown No. 25 (20 A) fuse in the driver's under-dash fuse/relay box • An open in the wire

Driving Position Memory Switch Test/Replacement

1. Remove the driver's door panel (see page 20-9).
2. Disconnect the 10P connector (A) from the driving position memory switch (B).

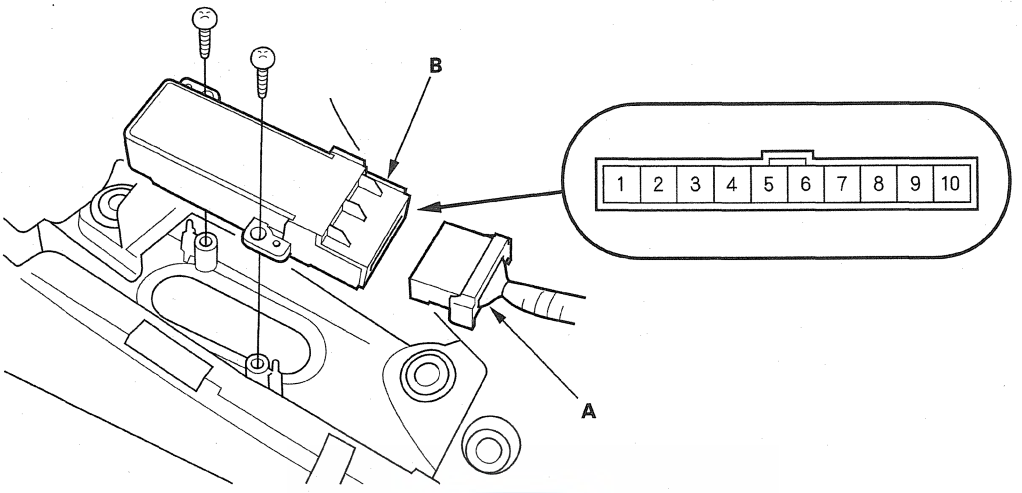

3. Remove the two screws, then remove the switch from the door panel.
4. Check for continuity between the terminals in each switch position according to the table.

Position \ Terminal		2		3	4	7	8	9	10	5		6
MEMO button	OFF											
	ON					○			○			
Position 1 button	OFF											
	ON							○	○	○	○	○
Position 2 button	OFF											
	ON						○		○			
Indicator 1		○	○		○							
Indicator 2		○	○	○								

5. If the continuity is not as specified, replace the switch.

Power Seat Adjustment Switch Test/Replacement

1. Remove the power seat adjustment switch knobs (A) and recline cover from the driver's power seat (see page 20-133), then remove the two screws and the power seat adjustment switch (B).

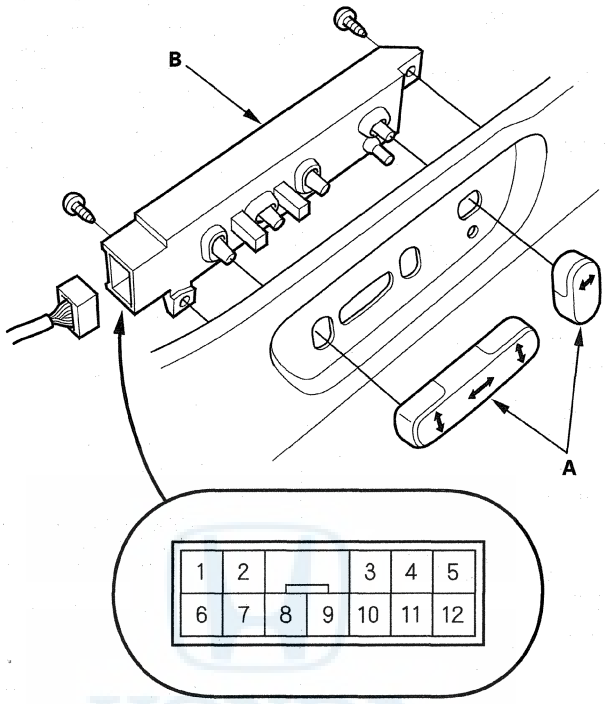

2. Disconnect the 12P connector from the power seat adjustment switch.
3. Reinstall the adjustment switch knobs to the switch.
4. Check for continuity between the terminals in each switch position according to the table.

Position \ Terminal		1	2	3	4	5	6	7	8	9	10
SLIDE SWITCH	FORWARD			○				○			
	REARWARD							○	○		
RECLINE SWITCH	FORWARD	○					○				
	REARWARD					○	○				
FRONT UP-DOWN SWITCH	UP							○		○	
	DOWN							○			○
REAR UP-DOWN SWITCH	UP		○				○				
	DOWN				○		○				

5. If the continuity is not as specified, replace the switch.

Driver's Power Seat Motor Test

Slide motor, Front up-down motor, Rear up-down motor

1. Remove the driver's seat (see page 20-114).
2. Disconnect the connector from each power seat motor.

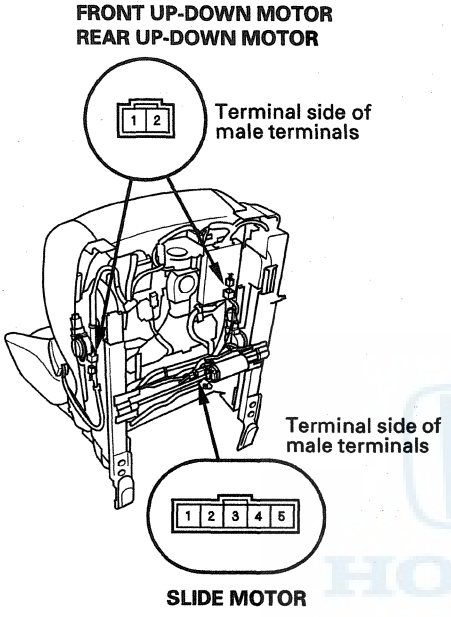

3. Test each motor by connecting power and ground according to the table. When the motor stops running, disconnect battery power immediately.

Position \ Terminal		1	5
SLIDE MOTOR	FORWARD	⊕	⊖
	REARWARD	⊖	⊕

Position \ Terminal		1	2
FRONT UP-DOWN MOTOR	UP	⊕	⊖
	DOWN	⊖	⊕

Position \ Terminal		1	2
REAR UP-DOWN MOTOR	UP	⊖	⊕
	DOWN	⊕	⊖

4. If the motor does not run or fails to run smoothly, replace it:
   - Slide motor (see page 20-120)
   - Front up-down motor (see page 20-122)
   - Rear up-down motor (see page 20-122)

Recline motor

1. Remove the driver's seat-back cover (see page 20-128).
2. Disconnect the 5P connector from the recline motor.

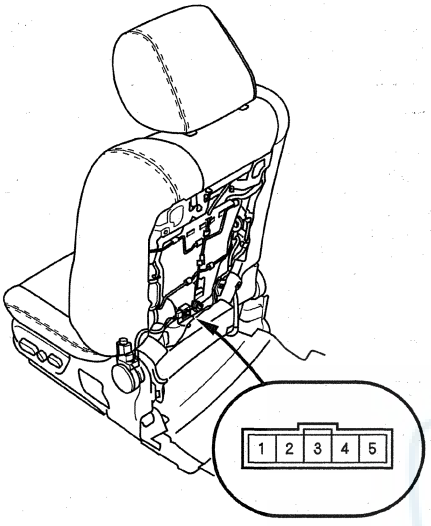

Terminal side of male terminals

3. Test the motor by connecting power and ground according to the table. When the motor stops running, disconnect battery power immediately.

Position \ Terminal		1	2
RECLINE MOTOR	FORWARD	⊖	⊕
	REARWARD	⊕	⊖

4. If the motor does not run or fails to run smoothly, replace the recline motor (see page 20-117).

Power Tilt/Telescopic Steering Switch Test/Replacement

1. Remove the driver's dashboard undercover (see page 20-100), and the driver's dashboard lower cover (see page 20-100), then remove the steering column covers (see page 17-25).
2. Disconnect the 13P connector (A) from the power tilt/telescopic steering switch (B).

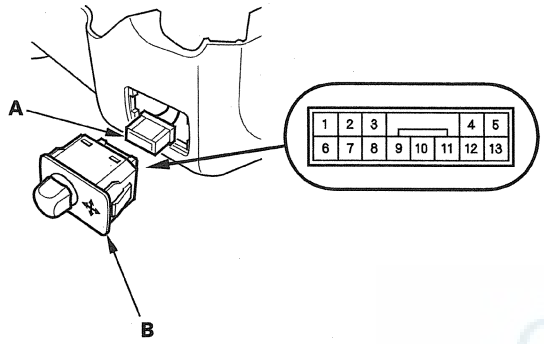

3. Check for continuity between the terminals in each switch position according to the table.

Position \ Terminal	1	3	6	7	10
TILT UP	○		○	○	
TILT DOWN	○	○		○	
TELESCOPIC PUSH		○	○	○	○
TELESCOPIC PULL		○	○	○	○

4. If the continuity is not as specified, replace the switch.

Power Tilt/Telescopic Steering Motor Test

1. Remove the driver's dashboard undercover (see page 20-100), and the driver's dashboard lower cover (see page 20-100), then remove the steering column covers (see page 17-25).
2. Disconnect the 6P connector and 8P connector from the power tilt/telescopic steering motors.

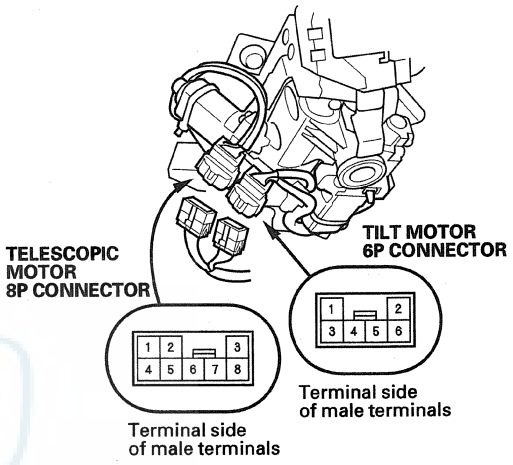

3. Check each motor by connecting power and ground according to the table. When the motor stops running, disconnect battery power immediately.

Tilt motor

Position \ Terminal	1	2
TILT UP	⊕	⊖
TILT DOWN	⊖	⊕

Telescopic motor

Position \ Terminal	2	3
TELESCOPIC PUSH	⊖	⊕
TELESCOPIC PULL	⊕	⊖

4. If the motor does not run or fails to run smoothly; replace the steering column assembly (see page 17-25).

Keyless Access System

Component Location Index

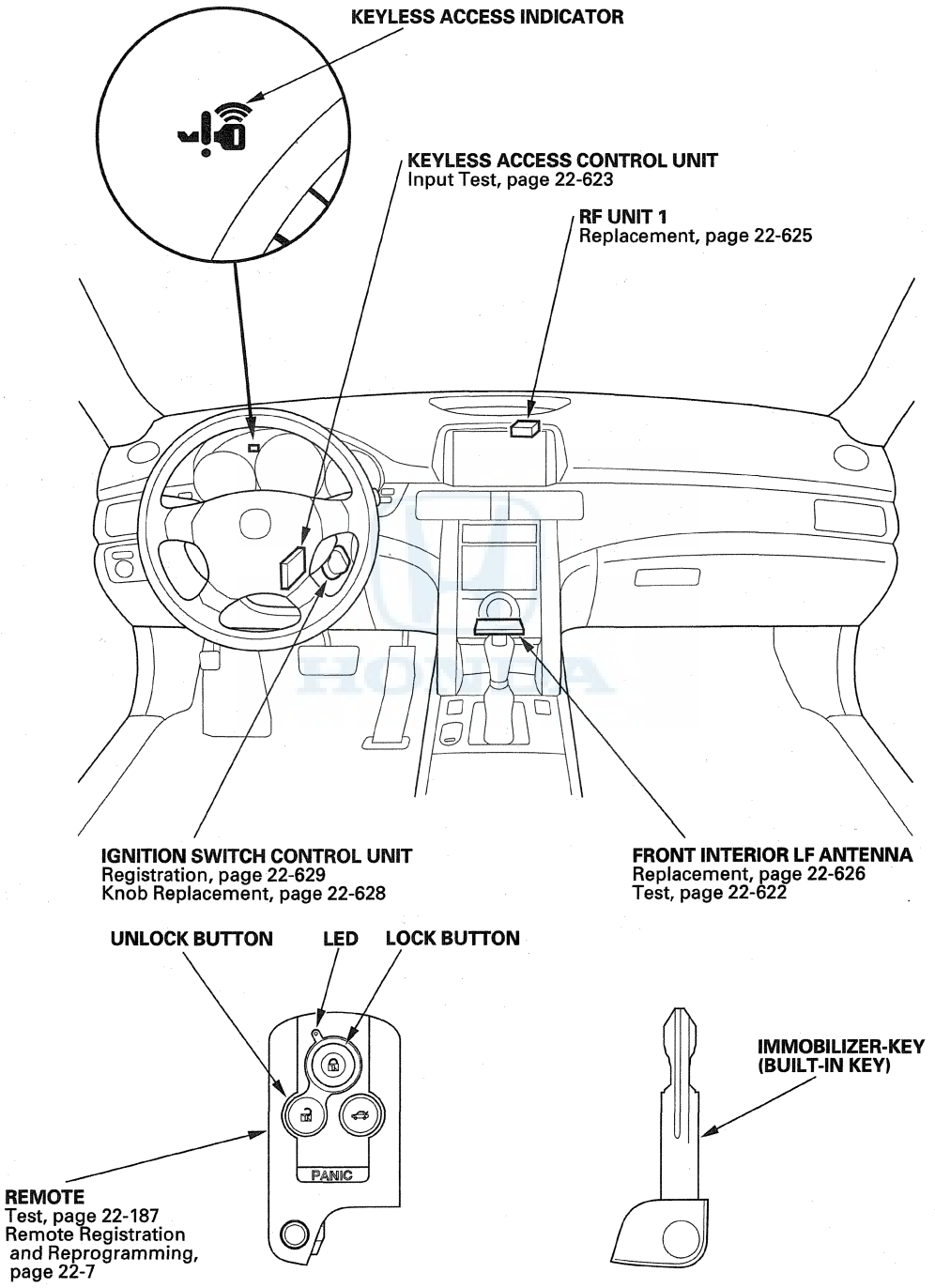

(cont'd)

Component Location Index (cont'd)

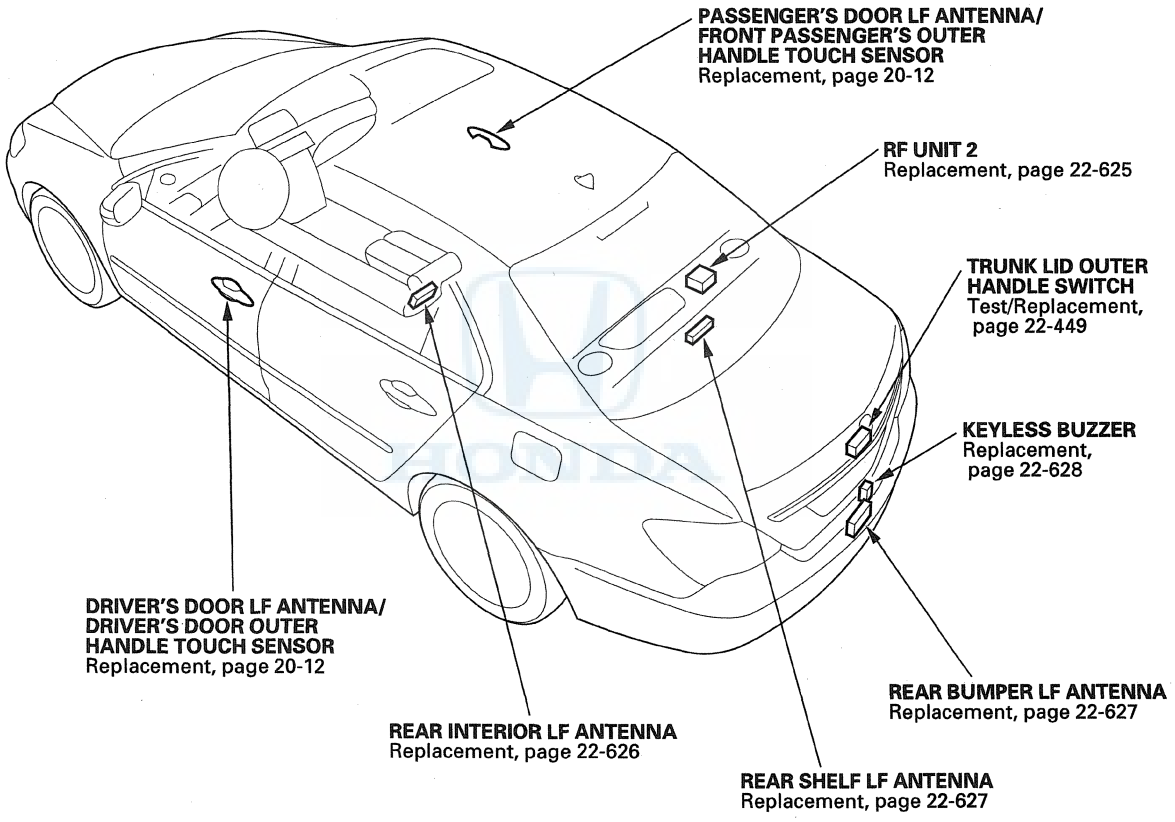

System Description

The keyless access system consists of the keyless access control unit, the ignition switch control unit, the door outer handle touch sensors, the LF (low frequency) antennas, the RF (radio frequency) units, the keyless access indicator, the keyless buzzer, and the remote. The function of the system is to allow the driver keyless entry into the vehicle along with starting the engine without an ignition key.

RF (Radio Frequency) Units

RF unit 1 is located behind the display control module and RF unit 2 is located on the rear shelf. The RF units combine the RF signal sensing and RF signal receiving to identify the remote's code.

LF (Low Frequency) Antennas

The front interior, rear interior and rear shelf LF antennas send the signals to the remote placed in the interior. The driver's door, front passenger's door, and rear bumper antennas send the signals to the keyless remote outside the vehicle.

Ignition Switch Control Unit

The ignition switch control unit is built in the ignition switch, and it controls the steering lock solenoid. When the built-in key is inserted in the ignition switch or the remote code is identified, the ignition switch control unit makes the steering lock solenoid release.

Touch Sensor and Lock Buttons

The touch sensors and lock buttons are built into the driver's and front passenger's door outer handles. To operate the door locks without the built-in key while carrying the remote, grip the door outer handle to unlock the doors and press the lock button on the door outer handle to lock the doors.

Fail-safe Function

The system has a fail-safe function. If any malfunction occurs, the keyless access indicator in the gauge comes on.

Self-diagnostic Function

The system also has a self-diagnostic function.

Keyless Access System

Circuit Diagram

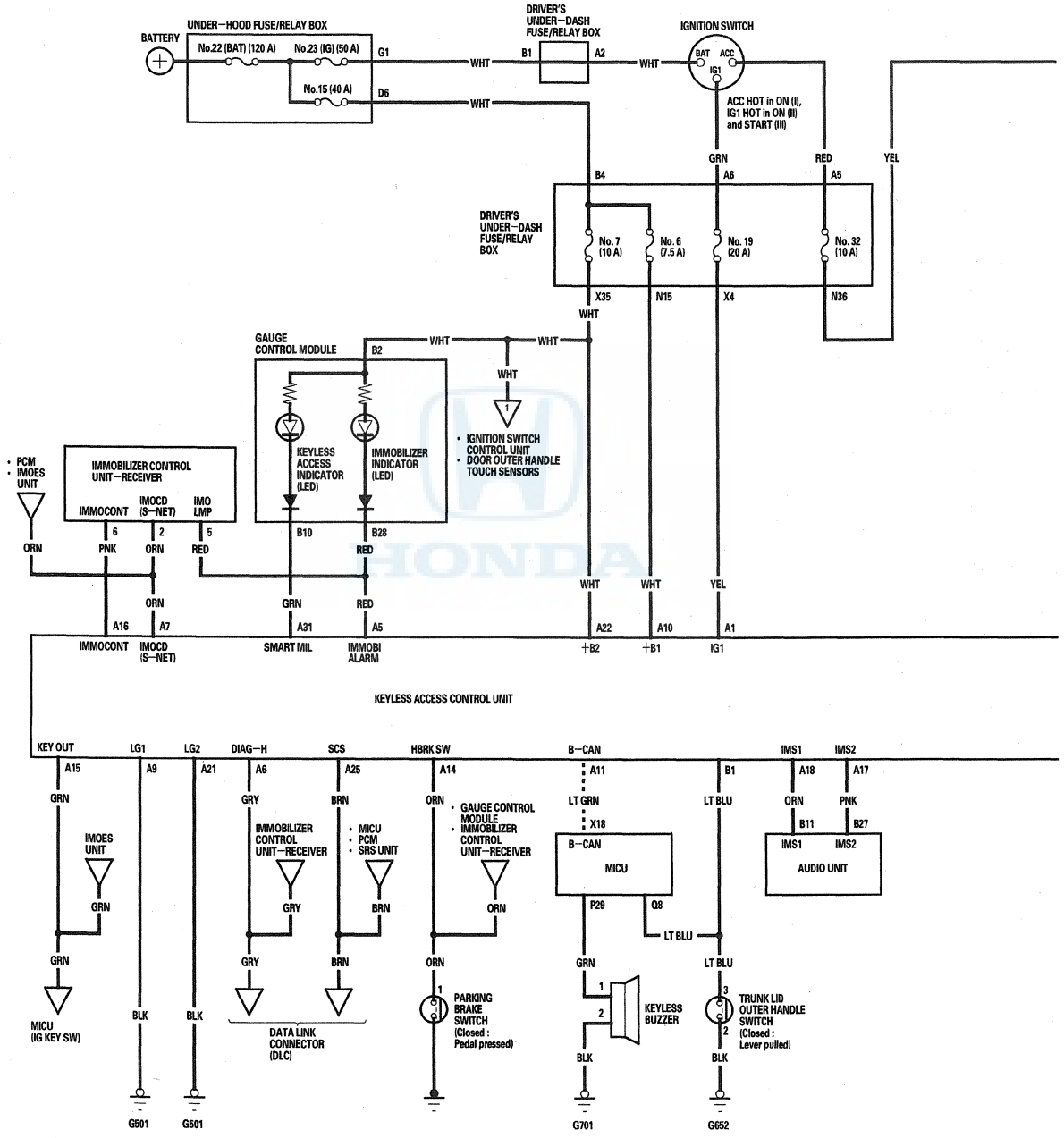

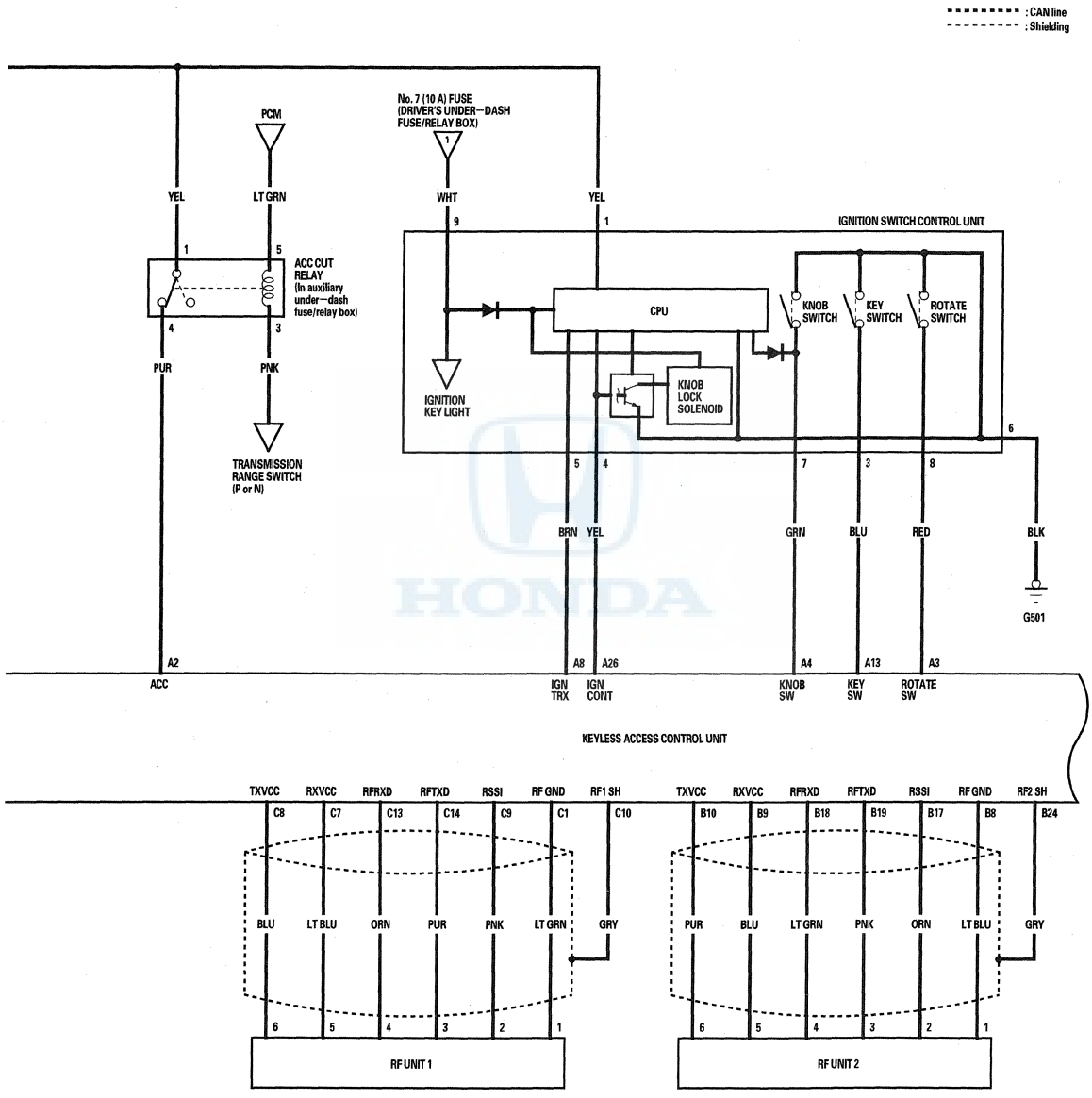
: CAN line
: Shielding
PCM
No. 7 (10 A) FUSE (DRIVER'S UNDER-DASH FUSE/RELAY BOX)
YEL
LT GRN
WHT
YEL
IGNITION SWITCH CONTROL UNIT
ACC CUT RELAY (In auxiliary under-dash fuse/relay box)
CPU
KNOB SWITCH
KEY SWITCH
ROTATE SWITCH
IGNITION KEY LIGHT
KNOB LOCK SOLENOID
PUR
PNK
TRANSMISSION RANGE SWITCH (P or N)
BRN
YEL
GRN
BLU
RED
BLK
G501
A2
A8
A26
A4
A13
A3
ACC
IGN TRX
IGN CONT
KNOB SW
KEY SW
ROTATE SW
KEYLESS ACCESS CONTROL UNIT
TXVCC
RXVCC
RFRXD
RFTXD
RSSI
RF GND
RF1 SH
RF2 SH
C8
C7
C13
C14
C9
C1
C10
B10
B9
B18
B19
B17
B8
B24
BLU
LT BLU
ORN
PUR
PNK
LT GRN
GRY
RF UNIT 1
RF UNIT 2

(cont'd)

Circuit Diagram (cont'd)

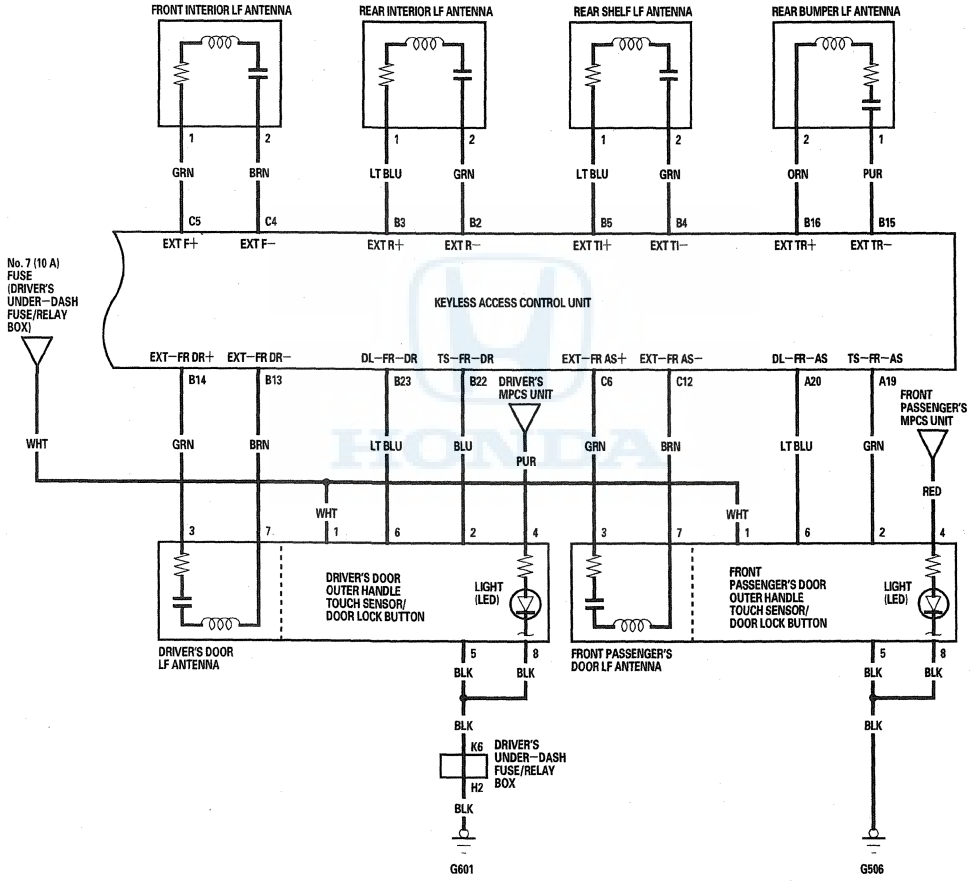

General Troubleshooting Information

Self-diagnosis Function

The keyless access system has a self-diagnosis function. If any malfunction is stored in the keyless access control unit, the DTC codes can be determined by the keyless access indicator blinking pattern.
Short the SCS line with the HDS, then turn the ignition switch to ON (II). The keyless access indicator starts to show the DTCs if any DTCs are stored.
The DTC is cleared when the battery terminal is disconnected, or by removing the No. 15 (40 A) fuse from the under-hood fuse/relay box.

DTC	Keyless access indicator DTC		Description
B1600	100	———	Keyless Access Control Unit Bus Line Error (BUS OFF) (see page 22-148)
B1601	1	○*	Keyless Access Control Unit Internal (CPU) Error (see page 22-582)
B1602	2	○*	Keyless Access Control Unit Internal (EEPROM) Error (see page 22-582)
B1605	5	———	Keyless Access Control Unit Lost Communication With MICU (MICU Message) (see page 22-582)
B1610	10	———	Keyless Access Control Unit Lost Communication With Gauge Control Module (VSP/NE Message) (see page 22-583)
B1613	13	———	Keyless Access Control Unit Lost Communication With Driver's MPCS Unit (DOORSW Message) (see page 22-583)
B1614	14	———	Keyless Access Control Unit Lost Communication With Driver's MPCS Unit (DRLOCKSW Message) (see page 22-583)
B1615	15	———	Keyless Access Control Unit Lost Communication With Driver's MPCS Unit (ASLOCKSW Message) (see page 22-583)
B1626	26	○*	Ignition Switch Control Unit No Response (see page 22-584)
B1627	27	○*	RF Unit 1 Not Connected (see page 22-587)
B1628	28	○*	RF Unit 2 Not Connected (see page 22-589)
B1640	40	○*	RF Unit 1 Circuit Malfunction (see page 22-587)
B1641	41	○*	RF Unit 2 Circuit Malfunction (see page 22-589)
B1645	45	○*	Driver's Door LF Antenna Circuit Short (see page 22-591)
B1646	46	○*	Driver's Door LF Antenna Circuit Open (see page 22-592)
B1647	47	○*	Passenger's Door LF Antenna Circuit Short (see page 22-593)
B1648	48	○*	Passenger's Door LF Antenna Circuit Open (see page 22-594)
B1657	57	○*	Rear Bumper LF Antenna Circuit Short (see page 22-595)
B1658	58	○*	Rear Bumper LF Antenna Circuit Open (see page 22-596)
B1659	59	○*	Front Interior LF Antenna Circuit Short (see page 22-597)
B1660	60	○*	Front Interior LF Antenna Circuit Open (see page 22-598)
B1663	63	○*	Rear Interior LF Antenna Circuit Short (see page 22-599)
B1664	64	○*	Rear Interior LF Antenna Circuit Open (see page 22-600)
B1667	67	○*	Rear Shelf LF Antenna Circuit Short (see page 22-601)
B1668	68	○*	Rear Shelf LF Antenna Circuit Open (see page 22-602)
B1671	71	○*	Ignition Switch Control Unit (KEY SW Line) Circuit Open (see page 22-603)
B1672	72	○*	Ignition Switch Control Unit (KNOB SW) Circuit Short (see page 22-604)
B1673	73	○*	Ignition Switch Control Unit (KNOB SW) Circuit Open (see page 22-605)
B1674	74	○*	Ignition Switch Control Unit (ROTATE SW) Circuit Short (see page 22-606)
B1675	75	○*	Ignition Switch Control Unit (ROTATE SW) Circuit Open (see page 22-607)

*: The keyless access indicator comes on when any malfunction is detected. With the ignition switch LOCK (0), the keyless access indicator comes on for 3 seconds when any malfunction is detected.

DTC Troubleshooting

DTC B1601: Keyless Access Control Unit Internal (CPU) Error

DTC B1602: Keyless Access Control Unit Internal (EEPROM) Error

NOTE: If you are troubleshooting multiple DTCs, be sure to follow the instructions in B-CAN System Diagnosis Test Mode A (see page 22-131).

1. Do the battery terminal disconnection procedure (see page 22-91).
2. Wait for at least 10 seconds to clear the DTCs.
3. Do the battery terminal reconnection procedure (see page 22-91).
4. Touch the door outer handle switch to lock the door.
5. Touch the door outer handle switch to unlock the door.
6. Connect the HDS to the data link connector.
7. Turn the ignition switch to LOCK (0), and then back to ON (II).
8. Check for DTCs with the HDS.

   Is DTC B1601 and/or B1602 indicated?

   YES—Replace the keyless access control unit. ■

   NO—Intermittent failure, the system is OK at this time. ■

DTC B1605: Keyless Access Control Unit Lost Communication With MICU (MICU Message)

NOTE: If you are troubleshooting multiple DTCs, be sure to follow the instructions in B-CAN System Diagnosis Test Mode A (see page 22-131).

1. Clear the DTCs with the HDS.
2. Touch the door outer handle switch to lock the door.
3. Check for DTCs with the HDS.

   Is DTC B1605 indicated?

   YES—Go to step 4.

   NO—Intermittent failure, the system is OK at this time. Check for loose or poor connections. ■

4. Check for DTCs with the HDS.

   Are DTCs B1055, B1157, B1255, B1806, B2107, and B2155 also indicated?

   YES—Do the MICU input test (see page 22-152). ■

   NO—Replace the keyless access control unit. ■

DTC B1610: Keyless Access Control Unit Lost Communication With Gauge Control Module (VSP/NE Message)

NOTE: If you are troubleshooting multiple DTCs, be sure to follow the instructions in B-CAN System Diagnosis Test Mode A (see page 22-131).

1. Clear the DTCs with the HDS.
2. Touch the door outer handle switch to lock the door.
3. Check for DTCs with the HDS.

   Is DTC B1610 indicated?

   YES—Go to step 4.

   NO—Intermittent failure, the system is OK at this time. Check for loose or poor connections. ■
4. Check for DTCs with the HDS.

   Are DTCs B1011, B1060, B1205, B1405, B1805, and B2160 also indicated?

   YES—Do the gauge control module input test (see page 22-155). ■

   NO—Replace the keyless access control unit. ■

DTC B1613: Keyless Access Control Unit Lost Communication With Driver's MPCS Unit (DOORSW Message)

DTC B1614: Keyless Access Control Unit Lost Communication With Driver's MPCS Unit (DRLOCKSW Message)

DTC B1615: Keyless Access Control Unit Lost Communication With Driver's MPCS Unit (ASLOCKSW Message)

NOTE: If you are troubleshooting multiple DTCs, be sure to follow the instructions in B-CAN System Diagnosis Test Mode A (see page 22-131).

1. Clear the DTCs with the HDS.
2. Touch the door outer handle switch to lock the door.
3. Check for DTCs with the HDS.

   Are DTCs B1613, B1614, and/or B1615 indicated?

   YES—Go to step 4.

   NO—Intermittent failure, the system is OK at this time. Check for loose or poor connections. ■
4. Check for DTCs with the HDS.

   Are DTCs B1013, B1014, B1015, B1064, B1065, B1181, B1182, and B1811 also indicated?

   YES—Do the driver's MPCS unit input test (see page 22-159). ■

   NO—Replace the keyless access control unit. ■

DTC Troubleshooting (cont'd)

DTC B1626: Ignition Switch Control Unit No Response

NOTE: If you are troubleshooting multiple DTCs, be sure to follow the instructions in B-CAN System Diagnosis Test Mode A (see page 22-131).

1. Clear the DTCs with the HDS.
2. Select MODE MENU from the HDS.
3. Do the SELF CHECK.
4. Check for DTCs with the HDS.

   Is DTC B1626 indicated?

   YES—Go to step 5.

   NO—Intermittent failure, the ignition switch control unit is OK at this time. Check for loose or poor connections at the ignition switch control unit connector. ■
5. Register the ignition switch control unit with the HDS.
6. Turn the ignition switch to LOCK (0), and then back to ON (II).
7. Repeat step 6 nine times.
8. Check for DTCs with the HDS.

   Is DTC B1626 indicated?

   YES—Go to step 9.

   NO—Intermittent failure, the ignition switch control unit is OK at this time. Check for loose or poor connections at the ignition switch control unit connector. ■
9. Turn the ignition switch to LOCK (0).
10. Disconnect the ignition switch control unit 10P connector.
11. Turn the ignition switch to ON (II).
12. Measure the voltage between ignition switch control unit 10P connector terminal No. 9 and body ground.

IGNITION SWITCH CONTROL UNIT 10P CONNECTOR

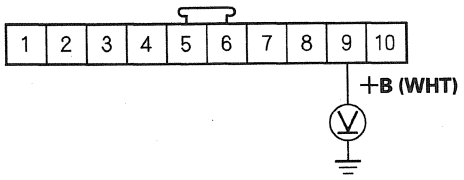

Wire side of female terminals

Is there battery voltage?

YES—Go to step 13.

NO—Check the No. 7 (10 A) fuse in the driver's under-dash fuse/relay box. If the fuse is OK, check for an open in the wire between the driver's under-dash fuse/relay box and ignition switch control unit. ■

13. Turn the ignition switch to LOCK (0).

14. Check for continuity between ignition switch control unit 10P connector terminal No. 6 and body ground.

IGNITION SWITCH CONTROL UNIT 10P CONNECTOR

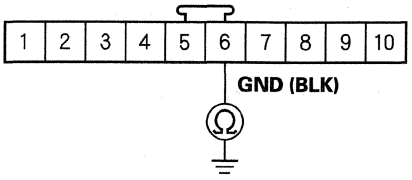

Wire side of female terminals

Is there continuity?

YES—Go to step 15.

NO—Repair an open in the wire or a poor ground (G501).■

15. Disconnect keyless access control unit connector A (31P).

16. Check for continuity between following ignition switch control unit 10P connector terminals and keyless access control unit connector A (31P) terminals:

IGNITION SWITCH CONTROL UNIT 10P CONNECTOR	KEYLESS ACCESS CONTROL UNIT CONNECTOR A (31P)
No. 3	No. 13
No. 4	No. 26
No. 5	No. 8
No. 7	No. 4
No. 8	No. 3

IGNITION SWITCH CONTROL UNIT 10P CONNECTOR
Wire side of female terminals

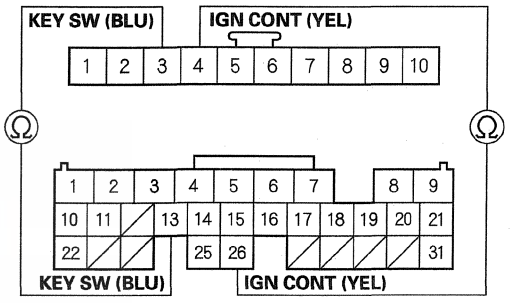

KEYLESS ACCESS CONTROL UNIT CONNECTOR A (31P)
Wire side of female terminals

IGNITION SWITCH CONTROL UNIT 10P CONNECTOR
Wire side of female terminals

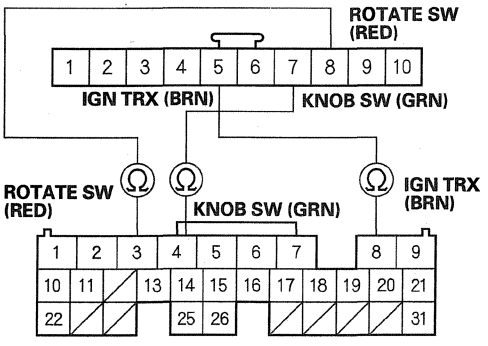

KEYLESS ACCESS CONTROL UNIT CONNECTOR A (31P)
Wire side of female terminals

Is there continuity?

YES—Go to step 17.

NO—Repair an open in the wire.■

(cont'd)

DTC Troubleshooting (cont'd)

17. Check for continuity between body ground and ignition switch control unit 10P connector terminals No. 3, No. 4, No. 5, No. 7, and No. 8 individually.

IGNITION SWITCH CONTROL UNIT 10P CONNECTOR

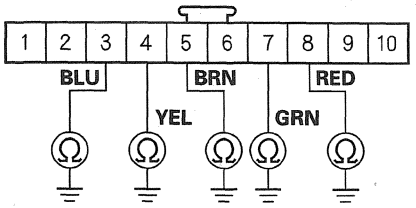

Wire side of female terminals

Is there continuity?

YES—Repair a short to ground in the wire. ■

NO—Go to step 18.

18. Reconnect keyless access control unit connector A (31P).

19. Connect the voltmeter between ignition switch control unit 10P connector terminal No. 5 and body ground.

IGNITION SWITCH CONTROL UNIT 10P CONNECTOR

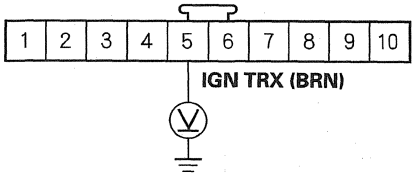

Wire side of female terminals

20. Turn the ignition switch to ON (II).

21. Select FUNCTION TEST from the HDS MODE MENU, and do the IGNTRX LINE DRIVING.

Does the voltage change from about 12 V to 0 V?

YES—Go to step 22.

NO—Replace the keyless access control unit. ■

22. Connect the voltmeter between ignition switch control unit 10P connector terminal No. 4 and body ground.

IGNITION SWITCH CONTROL UNIT 10P CONNECTOR

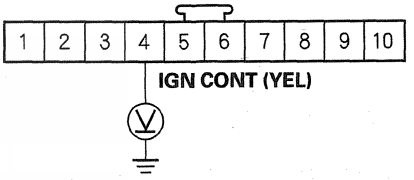

Wire side of female terminals

23. Select FUNCTION TEST MENU from the HDS, and do IGNCONT LINE DRIVING.

Does the voltage change from 0 to about 5 V?

YES—Replace the ignition switch control unit. ■

NO—Replace the keyless access control unit. ■

DTC B1627: RF Unit 1 Not Connected

DTC B1640: RF Unit 1 Circuit Malfunction

NOTE: If you are troubleshooting multiple DTCs, be sure to follow the instructions in B-CAN System Diagnosis Test Mode A (see page 22-131).

1. Clear the DTCs with the HDS.
2. Turn the ignition switch to LOCK (0), and then back to ON (II).
3. Select MODE MENU from the HDS, then enter SELF CHECK.
4. Do the SELF CHECK.
5. Check for DTCs with the HDS.

   Is DTC B1627 and/or B1640 indicated?

   YES—Go to step 6.

   NO—Go to step 12.
6. Turn the ignition switch to LOCK (0).
7. Disconnect the RF unit 1 6P connector.
8. Disconnect keyless access control unit connector C (17P).
9. Check for continuity between following RF unit 1 6P connector terminals and keyless access control unit connector C (17P) terminals.

RF UNIT 1 6P CONNECTOR	KEYLESS ACCESS CONTROL UNIT CONNECTOR C (17P)
No. 1	No. 1
No. 2	No. 9
No. 3	No. 14
No. 4	No. 13
No. 5	No. 7
No. 6	No. 8

RF UNIT 1 6P CONNECTOR
Wire side of female terminals

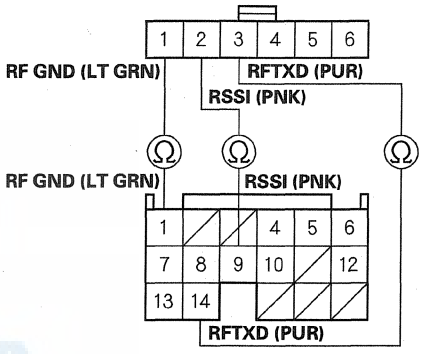

KEYLESS ACCESS CONTROL UNIT CONNECTOR C (17P)
Wire side of female terminals

RF UNIT 1 6P CONNECTOR
Wire side of female terminals

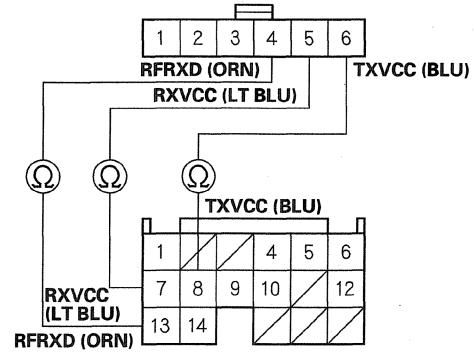

KEYLESS ACCESS CONTROL UNIT CONNECTOR C (17P)
Wire side of female terminals

Is there continuity?

YES—Go to step 10.

NO—Repair an open in the wire. ■

(cont'd)

DTC Troubleshooting (cont'd)

10. Check for continuity between body ground and RF unit 1 6P connector terminals No. 1, No. 2, No. 3, No. 4, No. 5, and No. 6 individually.

RF UNIT 1 6P CONNECTOR

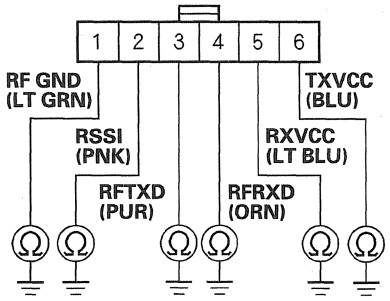

Wire side of female terminals

Is there continuity?

YES—Repair a short to ground in the wire. ■

NO—Go to step 11.

11. Reconnect the RF unit 1 6P connector and keyless access control unit connector C (17P).

12. Connect the voltmeter between RF unit 1 6P connector terminal No. 5 and body ground.

RF UNIT 1 6P CONNECTOR

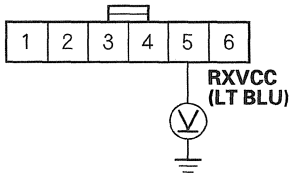

Wire side of female terminals

13. Select FUNCTION TEST from the HDS, and do RF1 RXVCC DRIVING.

Does the voltage change from 0 to about 5 V?

YES—Go to step 14.

NO—Replace the keyless access control unit. ■

14. Connect the voltmeter between RF unit 1 6P connector terminal No. 6 and body ground.

RF UNIT 1 6P CONNECTOR

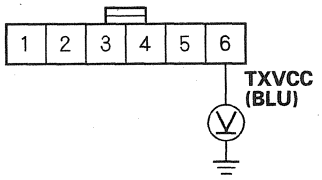

Wire side of female terminals

15. Select FUNCTION TEST from the HDS, and do RF1 TXVCC DRIVING.

Does the voltage change from 0 to about 5 V?

YES—Go to step 16.

NO—Replace the keyless access control unit. ■

16. Connect the voltmeter between RF unit 1 6P connector terminal No. 3 and body ground.

RF UNIT 1 6P CONNECTOR

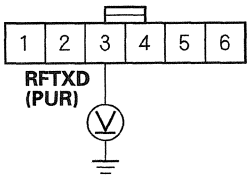

Wire side of female terminals

17. Select FUNCTION TEST from the HDS, and do RF1 TXDDC OUTPUT.

Does the voltage change from 0 to about 5 V?

YES—Replace the RF unit 1. ■

NO—Replace the keyless access control unit. ■

DTC B1628: RF Unit 2 Not Connected

DTC B1641: RF Unit 2 Circuit Malfunction

NOTE: If you are troubleshooting multiple DTCs, be sure to follow the instructions in B-CAN System Diagnosis Test Mode A (see page 22-131).

1. Clear the DTCs with the HDS.
2. Turn the ignition switch to LOCK (0), and then back to ON (II).
3. Select MODE MENU from the HDS, then enter SELF CHECK.
4. Do the SELF CHECK.
5. Check for DTCs with the HDS.

   Are DTCs B1628 and/or B1641 indicated?

   YES—Go to step 6.

   NO—Go to step 12.
6. Turn the ignition switch to LOCK (0).
7. Disconnect the RF unit 2 6P connector.
8. Disconnect keyless access control unit connector B (24P).
9. Check for continuity between following RF unit 2 6P connector terminals and keyless access control unit connector B (24P) terminals.

RF UNIT 2 6P CONNECTOR	KEYLESS ACCESS CONTROL UNIT CONNECTOR B (24P)
No. 1	No. 8
No. 2	No. 17
No. 3	No. 19
No. 4	No. 18
No. 5	No. 9
No. 6	No. 10

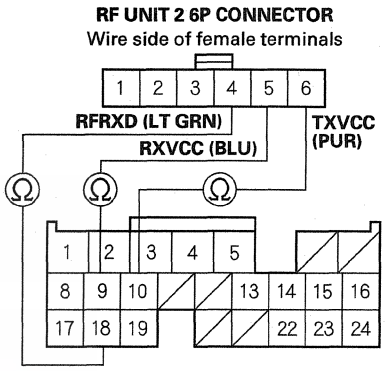

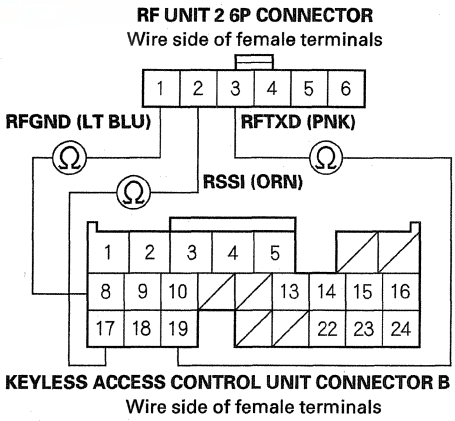

Is there continuity?

YES—Go to step 10.

NO—Repair an open in the wire. ■

(cont'd)

DTC Troubleshooting (cont'd)

10. Check for continuity between body ground and RF unit 2 6P connector terminals No. 1, No. 2, No. 3, No. 4, No. 5, and No. 6 individually.

RF UNIT 2 6P CONNECTOR

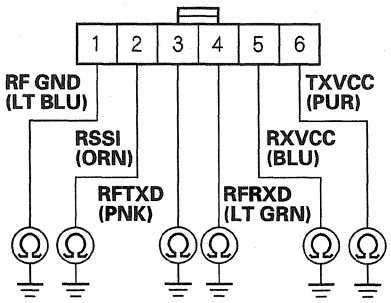

Wire side of female terminals

Is there continuity?

YES—Repair a short to ground in the wire. ■

NO—Go to step 11.

11. Reconnect the RF unit 2 6P connector and keyless access control unit connector B (24P).

12. Connect the voltmeter between RF unit 2 6P connector terminal No. 5 and body ground.

RF UNIT 2 6P CONNECTOR

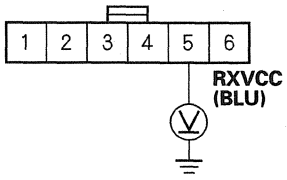

Wire side of female terminals

13. Select FUNCTION TEST from the HDS, and do RF2 RXVCC DRIVING.

Does the voltage change from 0 to about 5 V?

YES—Go to step 14.

NO—Replace the keyless access control unit. ■

14. Connect the voltmeter between RF unit 2 6P connector terminal No. 6 and body ground.

RF UNIT 2 6P CONNECTOR

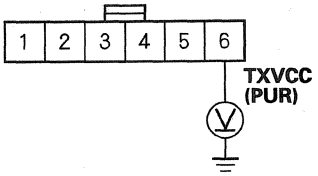

Wire side of female terminals

15. Select FUNCTION TEST from the HDS, and do RF2 TXVCC DRIVING.

Does the voltage change from 0 to about 5 V?

YES—Go to step 16.

NO—Replace the keyless access control unit. ■

16. Connect the voltmeter between RF unit 2 6P connector terminal No. 3 and body ground.

RF UNIT 2 6P CONNECTOR

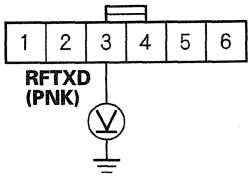

Wire side of female terminals

17. Select FUNCTION TEST from the HDS, and do RF2 TXD DRIVING.

Does the voltage change from 0 to about 5 V?

YES—Replace the RF unit 2. ■

NO—Replace the keyless access control unit. ■

DTC B1645: Driver's Door LF Antenna Circuit Short

NOTE: If you are troubleshooting multiple DTCs, be sure to follow the instructions in B-CAN System Diagnosis Test Mode A (see page 22-131).

1. Clear the DTCs with the HDS.
2. Turn the ignition switch to LOCK (0), and then back to ON (II).
3. Select MODE MENU from the HDS, then enter SELF CHECK.
4. Check for DTCs with the HDS.

   Is DTC B1645 indicated?

   YES—Go to step 5.

   NO—Intermittent failure, the system is OK at this time. Check for loose or poor connections. ■
5. Turn the ignition switch to LOCK (0).
6. Disconnect keyless access control unit connector B (24P).
7. Disconnect the driver's door LF antenna 8P connector.
8. Check for continuity between body ground and keyless access control unit connector B (24P) terminals No. 13 and No. 14 individually.

KEYLESS ACCESS CONTROL UNIT CONNECTOR B (24P)

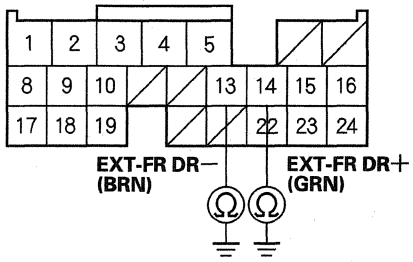

Wire side of female terminals

Is there continuity?

YES—Repair a short to ground in the wire. ■

NO—Go to step 9.

9. Reconnect keyless access control unit connector B (24P).
10. Connect the voltmeter between driver's door LF antenna 8P connector terminals No. 3 and No. 7.

DRIVER'S DOOR LF ANTENNA 8P CONNECTOR

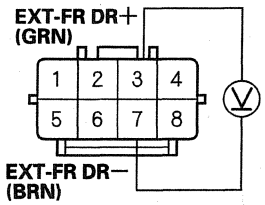

Wire side of female terminals

11. Turn the ignition switch to ON (II).
12. Select FUNCTION TEST from the HDS, and do DRIVER'S ANTENNA DC OUTPUT.

    Is there voltage?

    YES—Replace the driver's door LF antenna. ■

    NO—Replace the keyless access control unit. ■

DTC Troubleshooting (cont'd)

DTC B1646: Driver's Door LF Antenna Circuit Open

NOTE: If you are troubleshooting multiple DTCs, be sure to follow the instructions in B-CAN System Diagnosis Test Mode A (see page 22-131).

1. Clear the DTCs with the HDS.
2. Turn the ignition switch to LOCK (0), and then back to ON (II).
3. Select MODE MENU from the HDS, then enter SELF CHECK.
4. Check for DTCs with the HDS.

   Is DTC B1646 indicated?

   YES—Go to step 5.

   NO—Intermittent failure, the system is OK at this time. Check for loose or poor connections. ■
5. Turn the ignition switch to LOCK (0).
6. Disconnect keyless access control unit connector B (24P).
7. Disconnect the driver's door LF antenna 8P connector.
8. Connect driver's door LF antenna 8P connector terminals No. 3 and No. 7 to body ground with jumper wires.

DRIVER'S DOOR LF ANTENNA 8P CONNECTOR

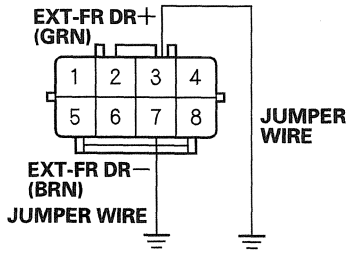

Wire side of female terminals

9. Check for continuity between body ground and keyless access control unit connector B (24P) terminals No. 13 and No. 14 individually.

KEYLESS ACCESS CONTROL UNIT CONNECTOR B (24P)

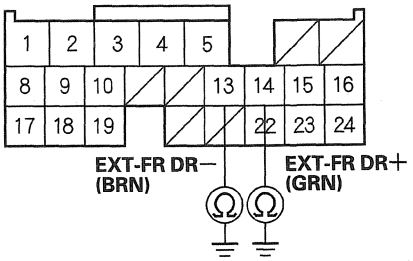

Wire side of female terminals

Is there continuity?

YES—Go to step 10.

NO—Repair an open in the wire. ■

10. Remove the jumper wires from the driver's door LF antenna 8P connector. Reconnect keyless access control unit connector B (24P).
11. Connect the voltmeter between driver's door LF antenna 8P connector terminals No. 3 and No. 7.

DRIVER'S DOOR LF ANTENNA 8P CONNECTOR

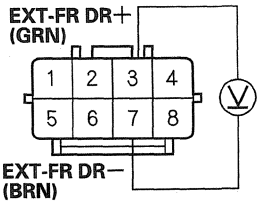

Wire side of female terminals

12. Turn the ignition switch to ON (II).
13. Select FUNCTION TEST from the HDS, and do DRIVER'S ANTENNA DC OUTPUT.

    Is there voltage?

    YES—Replace the driver's door LF antenna. ■

    NO—Replace the keyless access control unit. ■

DTC B1647: Front Passenger's Door LF Antenna Circuit Short

NOTE: If you are troubleshooting multiple DTCs, be sure to follow the instructions in B-CAN System Diagnosis Test Mode A (see page 22-131).

1. Clear the DTCs with the HDS.
2. Turn the ignition switch to LOCK (0), and then back to ON (II).
3. Select MODE MENU from the HDS, then enter SELF CHECK.
4. Check for DTCs with the HDS.

   Is DTC B1647 indicated?

   YES—Go to step 5.

   NO—Intermittent failure, the system is OK at this time. Check for loose or poor connections. ■
5. Turn the ignition switch to LOCK (0).
6. Disconnect keyless access control unit connector C (17P).
7. Disconnect the front passenger's door LF antenna 8P connector.
8. Check for continuity between body ground and keyless access control unit connector C (17P) terminals No. 6 and No. 12 individually.

KEYLESS ACCESS CONTROL UNIT CONNECTOR C (17P)

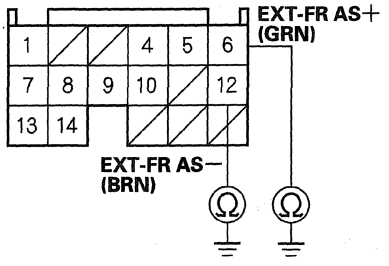

Wire side of female terminals

Is there continuity?

YES—Repair a short to ground in the wire. ■

NO—Go to step 9.

9. Reconnect keyless access control unit connector C (17P).
10. Connect the voltmeter between front passenger's door LF antenna 8P connector terminals No. 3 and No. 7.

FRONT PASSENGER'S DOOR LF ANTENNA 8P CONNECTOR

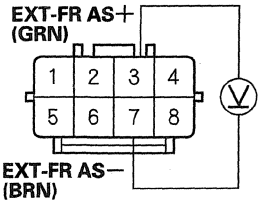

Wire side of female terminals

11. Turn the ignition switch to ON (II).
12. Select FUNCTION TEST from the HDS, and do FRONT PASSENGER ANTENNA DC OUTPUT.

    Is there voltage?

    YES—Replace the front passenger's door LF antenna. ■

    NO—Replace the keyless access control unit. ■

DTC Troubleshooting (cont'd)

DTC B1648: Front Passenger's Door LF Antenna Circuit Open

NOTE: If you are troubleshooting multiple DTCs, be sure to follow the instructions in B-CAN System Diagnosis Test Mode A (see page 22-131).

1. Clear the DTCs with the HDS.
2. Turn the ignition switch to LOCK (0), and then back to ON (II).
3. Select MODE MENU from the HDS, then enter SELF CHECK.
4. Check for DTCs with the HDS.

   Is DTC B1648 indicated?

   YES—Go to step 5.

   NO—Intermittent failure, the system is OK at this time. Check for loose or poor connections. ■
5. Turn the ignition switch to LOCK (0).
6. Disconnect keyless access control unit connector C (17P).
7. Disconnect the front passenger's door LF antenna 8P connector.
8. Connect front passenger's door LF antenna 8P connector terminals No. 3 and No. 7 to body ground with jumper wires.

FRONT PASSENGER'S DOOR LF ANTENNA 8P CONNECTOR

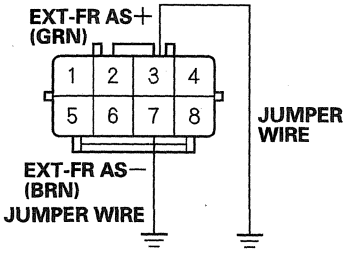

Wire side of female terminals

9. Check for continuity between body ground and keyless access control unit connector C (17P) terminals No. 6 and No. 12 individually.

KEYLESS ACCESS CONTROL UNIT CONNECTOR C (17P)

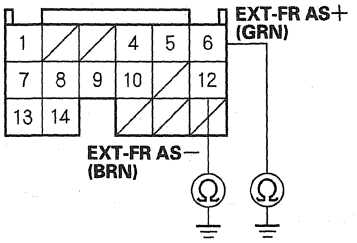

Wire side of female terminals

Is there continuity?

YES—Go to step 10.

NO—Repair an open in the wire. ■

10. Reconnect keyless access control unit connector C (17P).
11. Connect the voltmeter between front passenger's door LF antenna 8P connector terminals No. 3 and No. 7.

FRONT PASSENGER'S DOOR LF ANTENNA 8P CONNECTOR

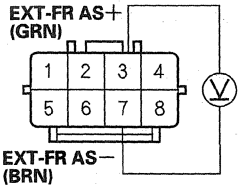

Wire side of female terminals

12. Turn the ignition switch to ON (II).
13. Select FUNCTION TEST from the HDS, and do PASSENGER'S ANTENNA DC OUTPUT.

    Is there voltage?

    YES—Replace the front passenger's door LF antenna. ■

    NO—Replace the keyless access control unit. ■

DTC B1657: Rear Bumper LF Antenna Circuit Short

NOTE: If you are troubleshooting multiple DTCs, be sure to follow the instructions in B-CAN System Diagnosis Test Mode A (see page 22-131).

1. Clear the DTCs with the HDS.
2. Turn the ignition switch to LOCK (0), and then back to ON (II).
3. Select MODE MENU from the HDS, then enter SELF CHECK.
4. Check for DTCs with the HDS.

   Is DTC B1657 indicated?

   YES—Go to step 5.

   NO—Intermittent failure, the system is OK at this time. Check for loose or poor connections. ■
5. Turn the ignition switch to LOCK (0).
6. Disconnect keyless access control unit connector B (24P).
7. Disconnect the rear bumper LF antenna 2P connector.
8. Check for continuity between body ground and keyless access control unit connector B (24P) terminals No. 15 and No. 16 individually.

KEYLESS ACCESS CONTROL UNIT CONNECTOR B (24P)

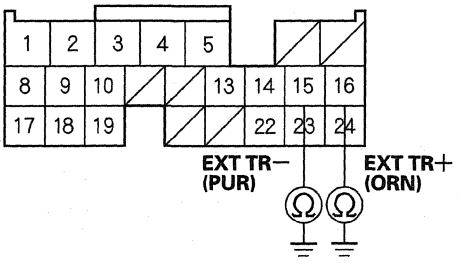

Wire side of female terminals

Is there continuity?

YES—Repair a short to ground in the wire. ■

NO—Go to step 9.

9. Reconnect keyless access control unit connector B (24P).
10. Connect the voltmeter between rear bumper LF antenna 2P connector terminals No. 1 and No. 2.

REAR BUMPER LF ANTENNA 2P CONNECTOR

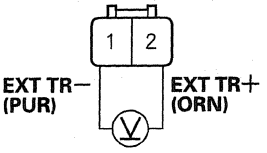

Wire side of female terminals

11. Turn the ignition switch to ON (II).
12. Select FUNCTION TEST from the HDS, and do TRUNK/TAILGATE/REAR BUMPER ANTENNA L DC OUTPUT.

    Is there voltage?

    YES—Replace the rear bumper LF antenna. ■

    NO—Replace the keyless access control unit. ■

DTC Troubleshooting (cont'd)

DTC B1658: Rear Bumper LF Antenna Circuit Open

NOTE: If you are troubleshooting multiple DTCs, be sure to follow the instructions in B-CAN System Diagnosis Test Mode A (see page 22-131).

1. Clear the DTCs with the HDS.
2. Turn the ignition switch to LOCK (0), and then back to ON (II).
3. Select MODE MENU from the HDS, then enter SELF CHECK.
4. Check for DTCs with the HDS.

   Is DTC B1658 indicated?

   YES—Go to step 5.

   NO—Intermittent failure, the system is OK at this time. Check for loose or poor connections. ■
5. Turn the ignition switch to LOCK (0).
6. Disconnect keyless access control unit connector B (24P).
7. Disconnect the rear bumper LF antenna 2P connector.
8. Connect rear bumper LF antenna 2P connector terminals No. 1 and No. 2 to body ground with jumper wires.

REAR BUMPER LF ANTENNA 2P CONNECTOR

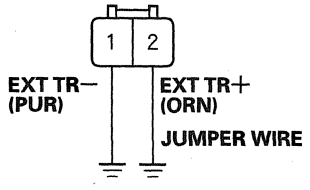

Wire side of female terminals

9. Check for continuity between body ground and keyless access control unit connector B (24P) terminals No. 15 and No. 16 individually.

KEYLESS ACCESS CONTROL UNIT CONNECTOR B (24P)

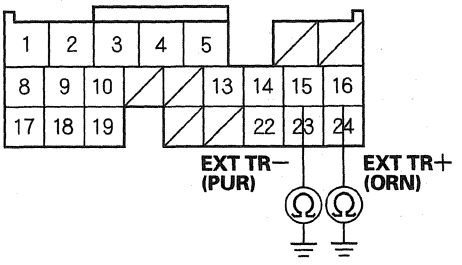

Wire side of female terminals

Is there continuity?

YES—Go to step 10.

NO—Repair an open in the wire. ■

10. Reconnect keyless access control unit connector B (24P).
11. Connect the voltmeter between rear bumper LF antenna 2P connector terminals No. 1 and No. 2.

REAR BUMPER LF ANTENNA 2P CONNECTOR

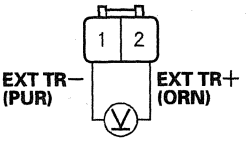

Wire side of female terminals

12. Turn the ignition switch to ON (II).
13. Select FUNCTION TEST from the HDS, and do TRUNK/TAILGATE/REAR BUMPER ANTENNA L DC OUTPUT.

    Is there voltage?

    YES—Replace the rear bumper LF antenna. ■

    NO—Replace the keyless access control unit. ■

DTC B1659: Front Interior LF Antenna Circuit Short

NOTE: If you are troubleshooting multiple DTCs, be sure to follow the instructions in B-CAN System Diagnosis Test Mode A (see page 22-131).

1. Clear the DTCs with the HDS.
2. Turn the ignition switch to LOCK (0), and then back to ON (II).
3. Select MODE MENU from the HDS, then enter SELF CHECK.
4. Check for DTCs with the HDS.

   Is DTC B1659 indicated?

   YES—Go to step 5.

   NO—Intermittent failure, the system is OK at this time. Check for loose or poor connections. ■
5. Turn the ignition switch to LOCK (0).
6. Disconnect keyless access control unit connector C (17P).
7. Disconnect the front interior LF antenna 2P connector.
8. Check for continuity between body ground and keyless access control unit connector C (17P) terminals No. 4 and No. 5 individually.

KEYLESS ACCESS CONTROL UNIT CONNECTOR C (17P)

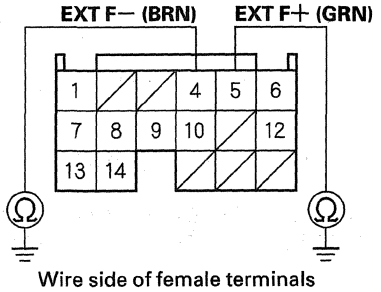

Wire side of female terminals

Is there continuity?

YES—Repair a short to ground in the wire. ■

NO—Go to step 9.

9. Reconnect keyless access control unit connector C (17P).
10. Connect the voltmeter between front interior LF antenna 2P connector terminals No. 1 and No. 2.

FRONT INTERIOR LF ANTENNA 2P CONNECTOR

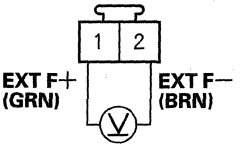

Wire side of female terminals

11. Turn the ignition switch to ON (II).
12. Select FUNCTION TEST from the HDS, and do FRONT INTERIOR ANTENNA L DC OUTPUT.

    Is there voltage?

    YES—Replace the front interior LF antenna. ■

    NO—Replace the keyless access control unit. ■

DTC Troubleshooting (cont'd)

DTC B1660: Front Interior LF Antenna Circuit Open

NOTE: If you are troubleshooting multiple DTCs, be sure to follow the instructions in B-CAN System Diagnosis Test Mode A (see page 22-131).

1. Clear the DTCs with the HDS.
2. Turn the ignition switch to LOCK (0), and then back to ON (II).
3. Select MODE MENU from the HDS, then enter SELF CHECK.
4. Check for DTCs with the HDS.

   Is DTC B1660 indicated?

   YES—Go to step 5.

   NO—Intermittent failure, the system is OK at this time. Check for loose or poor connections. ■
5. Turn the ignition switch to LOCK (0).
6. Disconnect keyless access control unit connector C (17P).
7. Disconnect the front interior LF antenna 2P connector.
8. Connect front interior LF antenna 2P connector terminals No. 1 and No. 2 to body ground with jumper wires.

FRONT INTERIOR LF ANTENNA 2P CONNECTOR

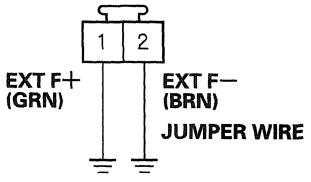

Wire side of female terminals

9. Check for continuity between body ground and keyless access control unit connector C (17P) terminals No. 4 and No. 5 individually.

KEYLESS ACCESS CONTROL UNIT CONNECTOR C (17P)

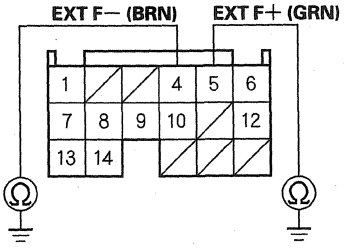

Wire side of female terminals

Is there continuity?

YES—Go to step 10.

NO—Repair an open in the wire. ■

10. Reconnect keyless access control unit connector C (17P).
11. Connect the voltmeter between front interior LF antenna 2P connector terminals No. 1 and No. 2.

FRONT INTERIOR LF ANTENNA 2P CONNECTOR

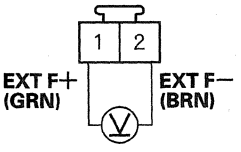

Wire side of female terminals

12. Turn the ignition switch to ON (II).
13. Select FUNCTION TEST from the HDS, and do FRONT INTERIOR ANTENNA L DC OUTPUT.

    Is there voltage?

    YES—Replace the front interior LF antenna. ■

    NO—Replace the keyless access control unit. ■

DTC B1663: Rear Interior LF Antenna Circuit Short

NOTE: If you are troubleshooting multiple DTCs, be sure to follow the instructions in B-CAN System Diagnosis Test Mode A (see page 22-131).

1. Clear the DTCs with the HDS.
2. Turn the ignition switch to LOCK (0), and then back to ON (II).
3. Select MODE MENU from the HDS, then enter SELF CHECK.
4. Check for DTCs with the HDS.

   Is DTC B1663 indicated?

   YES—Go to step 5.

   NO—Intermittent failure, the system is OK at this time. Check for loose or poor connections. ■
5. Turn the ignition switch to LOCK (0).
6. Disconnect keyless access control unit connector B (24P).
7. Disconnect the rear interior LF antenna 2P connector.
8. Check for continuity between body ground and keyless access control unit connector B (24P) terminals No. 2 and No. 3 individually.

KEYLESS ACCESS CONTROL UNIT CONNECTOR B (24P)

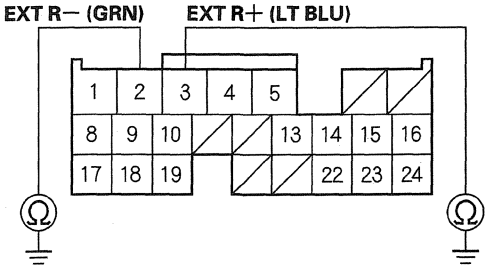

Wire side of female terminals

Is there continuity?

YES—Repair a short to ground in the wire. ■

NO—Go to step 9.

9. Reconnect keyless access control unit connector B (24P).
10. Connect the voltmeter between rear interior LF antenna 2P connector terminals No. 1 and No. 2.

REAR INTERIOR LF ANTENNA 2P CONNECTOR

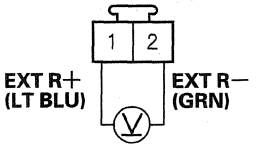

Wire side of female terminals

11. Turn the ignition switch to ON (II).
12. Select FUNCTION TEST from the HDS, and do REAR INTERIOR ANTENNA L DC OUTPUT.

    Is there voltage?

    YES—Replace the rear interior LF antenna. ■

    NO—Replace the keyless access control unit. ■

DTC Troubleshooting (cont'd)

DTC B1664: Rear Interior LF Antenna Circuit Open

NOTE: If you are troubleshooting multiple DTCs, be sure to follow the instructions in B-CAN System Diagnosis Test Mode A (see page 22-131).

1. Clear the DTCs with the HDS.
2. Turn the ignition switch to LOCK (0), and then back to ON (II).
3. Select MODE MENU from the HDS, then enter SELF CHECK.
4. Check for DTCs with the HDS.

   Is DTC B1664 indicated?

   YES—Go to step 5.

   NO—Intermittent failure, the system is OK at this time. Check for loose or poor connections. ■
5. Turn the ignition switch to LOCK (0).
6. Disconnect keyless access control unit connector B (24P).
7. Disconnect the rear interior LF antenna 2P connector.
8. Connect rear interior LF antenna 2P connector terminals No. 1 and No. 2 to body ground with jumper wires.

REAR INTERIOR LF ANTENNA 2P CONNECTOR

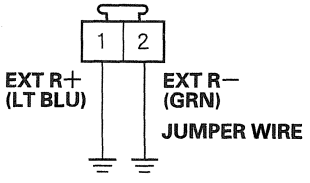

Wire side of female terminals

9. Check for continuity between body ground and keyless access control unit connector B (24P) terminals No. 2 and No. 3 individually.

KEYLESS ACCESS CONTROL UNIT CONNECTOR B (24P)

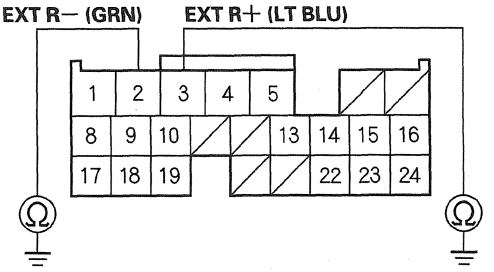

Wire side of female terminals

Is there continuity?

YES—Go to step 10.

NO—Repair a open in the wire. ■

10. Reconnect keyless access control unit connector B (24P).
11. Connect the voltmeter between rear interior LF antenna 2P connector terminals No. 1 and No. 2.

REAR INTERIOR LF ANTENNA 2P CONNECTOR

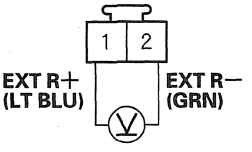

Wire side of female terminals

12. Turn the ignition switch to ON (II).
13. Select FUNCTION TEST from the HDS, and do REAR INTERIOR ANTENNA L DC OUTPUT.

    Is there voltage?

    YES—Replace the rear interior LF antenna. ■

    NO—Replace the keyless access control unit. ■

DTC B1667: Rear Shelf LF Antenna Circuit Short

NOTE: If you are troubleshooting multiple DTCs, be sure to follow the instructions in B-CAN System Diagnosis Test Mode A (see page 22-131).

1. Clear the DTCs with the HDS.
2. Turn the ignition switch to LOCK (0), and then back to ON (II).
3. Select MODE MENU from the HDS, then enter SELF CHECK.
4. Check for DTCs with the HDS.

   Is DTC B1667 indicated?

   YES—Go to step 5.

   NO—Intermittent failure, the system is OK at this time. Check for loose or poor connections. ■
5. Turn the ignition switch to LOCK (0).
6. Disconnect keyless access control unit connector B (24P).
7. Disconnect the rear shelf LF antenna 2P connector.
8. Check for continuity between body ground and keyless access control unit connector B (24P) terminals No. 4 and No. 5 individually.

KEYLESS ACCESS CONTROL UNIT CONNECTOR B (24P)

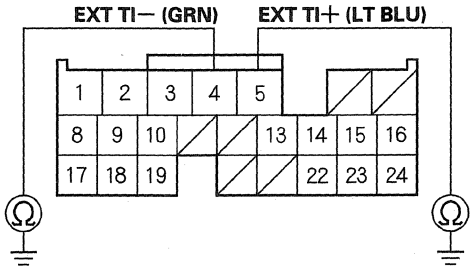

Wire side of female terminals

Is there continuity?

YES—Repair a short to ground in the wire. ■

NO—Go to step 9.

9. Reconnect keyless access control unit connector B (24P).
10. Connect the voltmeter between rear shelf LF antenna 2P connector terminals No. 1 and No. 2.

REAR SHELF LF ANTENNA 2P CONNECTOR

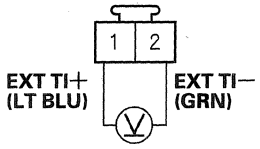

Wire side of female terminals

11. Turn the ignition switch to ON (II).
12. Select FUNCTION TEST from the HDS, and do TRUNK ROOM ANTENNA L DC OUTPUT.

    Is there voltage?

    YES—Replace the rear shelf LF antenna. ■

    NO—Replace the keyless access control unit. ■

DTC Troubleshooting (cont'd)

DTC B1668: Rear Shelf LF Antenna Circuit Open

NOTE: If you are troubleshooting multiple DTCs, be sure to follow the instructions in B-CAN System Diagnosis Test Mode A (see page 22-131).

1. Clear the DTCs with the HDS.
2. Turn the ignition switch to LOCK (0), and then back to ON (II).
3. Select MODE MENU from the HDS, then enter SELF CHECK.
4. Check for DTCs with the HDS.

   Is DTC B1668 indicated?

   YES—Go to step 5.

   NO—Intermittent failure, the system is OK at this time. Check for loose or poor connections. ■
5. Turn the ignition switch to LOCK (0).
6. Disconnect keyless access control unit connector B (24P).
7. Disconnect the rear shelf LF antenna 2P connector.
8. Connect rear shelf LF antenna 2P connector terminals No. 1 and No. 2 to body ground with jumper wires.

REAR SHELF LF ANTENNA 2P CONNECTOR

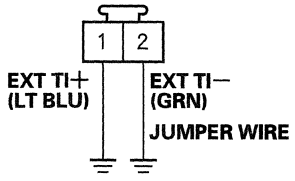

Wire side of female terminals

9. Check for continuity between body ground and keyless access control unit connector B (24P) terminals No. 4 and No. 5 individually.

KEYLESS ACCESS CONTROL UNIT CONNECTOR B (24P)

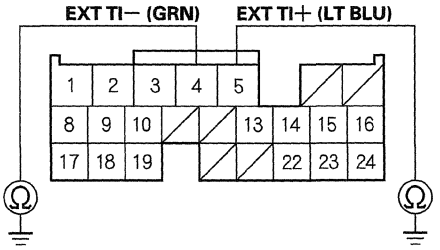

Wire side of female terminals

Is there continuity?

YES—Go to step 10.

NO—Repair an open in the wire. ■

10. Reconnect keyless access control unit connector B (24P).
11. Connect the voltmeter between rear shelf LF antenna 2P connector terminals No. 1 and No. 2.

REAR SHELF LF ANTENNA 2P CONNECTOR

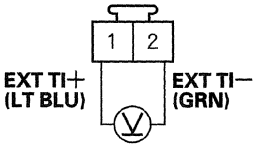

Wire side of female terminals

12. Turn the ignition switch to ON (II).
13. Select FUNCTION TEST from the HDS, and do TRUNK ROOM ANTENNA L DC OUTPUT.

    Is there voltage?

    YES—Replace the rear shelf LF antenna. ■

    NO—Replace the keyless access control unit. ■

DTC B1671: Ignition Switch Control Unit (KEY SW) Circuit Open

NOTE: If you are troubleshooting multiple DTCs, be sure to follow the instructions in B-CAN System Diagnosis Test Mode A (see page 22-131).

1. Clear the DTCs with the HDS.
2. Turn the ignition switch to LOCK (0).
3. Insert the built-in key into the ignition key switch.
4. Turn the ignition switch to ON (II) and to LOCK (0) ten times using the built-in key.
5. Check for DTCs with the HDS.

   Is DTC B1671 indicated?

   YES—Go to step 6.

   NO—Intermittent failure, the system is OK at this time. Check for loose or poor connections. ■
6. Turn the ignition switch to LOCK (0).
7. Disconnect keyless access control unit connector A (31P).
8. Disconnect the ignition switch control unit 10P connector.
9. Check for continuity between keyless access control unit connector A (31P) terminal No. 13 and ignition switch control unit 10P connector terminal No. 3.

IGNITION SWITCH CONTROL UNIT 10P CONNECTOR
Wire side of female terminals

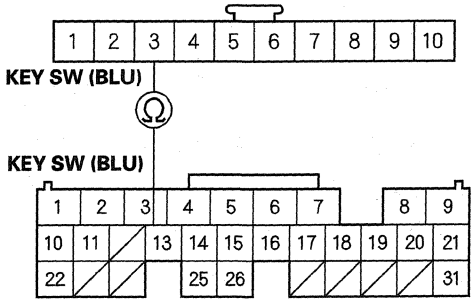

KEYLESS ACCESS CONTROL UNIT CONNECTOR A (31P)
Wire side of female terminals

Is there continuity?

YES—Go to step 10.

NO—Repair an open in the wire. ■

10. With the built-in key inserted, check for continuity between ignition switch control unit 10P connector terminals No. 3 and No. 6.

IGNITION SWITCH CONTROL UNIT 10P CONNECTOR

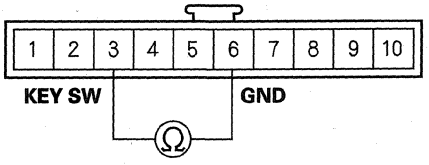

Terminal side of male terminals

Is there continuity?

YES—Replace the keyless access control unit ■

NO—Replace the ignition switch control unit. ■

DTC Troubleshooting (cont'd)

DTC B1672: Ignition Switch Control Unit (KNOB SW) Circuit Short

NOTE: If you are troubleshooting multiple DTCs, be sure to follow the instructions in B-CAN System Diagnosis Test Mode A (see page 22-131).

1. Clear the DTCs with the HDS.
2. Turn the ignition switch to LOCK (0).
3. Insert the built-in key into the ignition key switch.
4. Turn the ignition switch to ON (II), and to LOCK (0) ten times using the built-in key.
5. Check for DTCs with the HDS.

   Is DTC B1672 indicated?

   YES—Go to step 6.

   NO—Intermittent failure, the system is OK at this time. Check for loose or poor connections. ■
6. Turn the ignition switch to LOCK (0).
7. Disconnect keyless access control unit connector A (31P).
8. Disconnect the ignition switch control unit 10P connector.
9. Check for continuity between ignition switch control unit 10P connector terminal No. 7 and body ground.

IGNITION SWITCH CONTROL UNIT 10P CONNECTOR

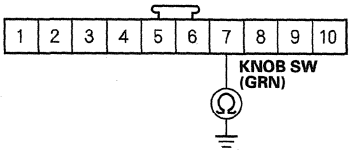

Wire side of female terminals

Is there continuity?

YES—Repair a short to ground in the wire. ■

NO—Go to step 10.

10. Remove the built-in key from the ignition switch.
11. Check for continuity between ignition switch control unit 10P connector terminals No. 7 and No. 6.

IGNITION SWITCH CONTROL UNIT 10P CONNECTOR

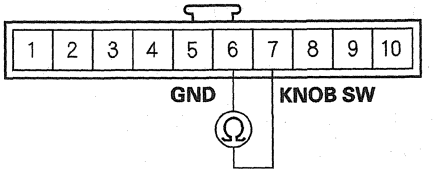

Terminal side of male terminals

Is there continuity?

YES—Replace the ignition switch control unit. ■

NO—Replace the keyless access control unit. ■

DTC B1673: Ignition Switch Control Unit (KNOB SW) Circuit Open

NOTE: If you are troubleshooting multiple DTCs, be sure to follow the instructions in B-CAN System Diagnosis Test Mode A (see page 22-131).

1. Clear the DTCs with the HDS.
2. Turn the ignition switch to LOCK (0).
3. Insert the built-in key into the ignition switch.
4. Turn the ignition switch to ON (II) and to LOCK (0) ten times using the built-in key.
5. Check for DTCs with the HDS.

   Is DTC B1673 indicated?

   YES—Go to step 6.

   NO—Intermittent failure, the system is OK at this time. Check for loose or poor connections. ■
6. Turn the ignition switch to LOCK (0).
7. Disconnect keyless access control unit connector A (31P).
8. Disconnect the ignition switch control unit 10P connector.
9. Check for continuity between keyless access control unit connector A (31P) terminal No. 4 and ignition switch control unit 10P connector terminal No. 7.

IGNITION SWITCH CONTROL UNIT 10P CONNECTOR
Wire side of female terminals

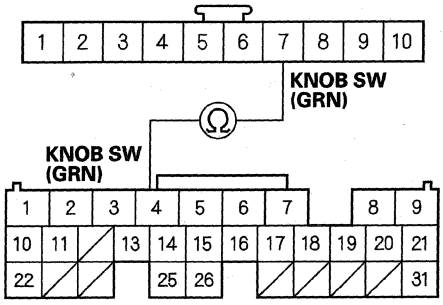

KEYLESS ACCESS CONTROL UNIT CONNECTOR A (31P)
Wire side of female terminals

Is there continuity?

YES—Go to step 10.

NO—Repair an open in the wire. ■

10. Remove the built-in key from the ignition switch.
11. With the ignition knob pushed, check for continuity between ignition switch control unit 10P connector terminals No. 7 and No. 6.

IGNITION SWITCH CONTROL UNIT 10P CONNECTOR

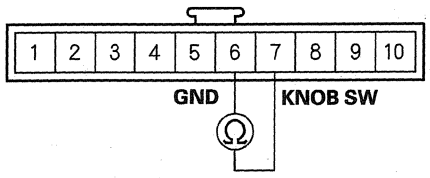

Terminal side of male terminals

Is there continuity?

YES—Replace the keyless access control unit. ■

NO—Replace the ignition switch control unit. ■

DTC Troubleshooting (cont'd)

DTC B1674: Ignition Switch Control Unit (ROTATE SW) Circuit Short

NOTE: If you are troubleshooting multiple DTCs, be sure to follow the instructions in B-CAN System Diagnosis Test Mode A (see page 22-131).

1. Clear the DTCs with the HDS.
2. Turn the ignition switch to LOCK (0).
3. Insert the built-in key into the ignition switch.
4. Turn the ignition switch to ON (II), and to LOCK (0) ten times using the built-in key.
5. Check for DTCs with the HDS.

   Is DTC B1674 indicated?

   YES—Go to step 6.

   NO—Intermittent failure, the system is OK at this time. Check for loose or poor connections. ■
6. Turn the ignition switch to LOCK (0).
7. Disconnect keyless access control unit connector A (31P).
8. Disconnect the ignition switch control unit 10P connector.
9. Check for continuity between ignition switch control unit 10P connector terminal No. 8 and body ground.

IGNITION SWITCH CONTROL UNIT 10P CONNECTOR

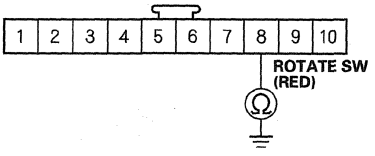

Wire side of female terminals

Is there continuity?

YES—Repair a short to ground in the wire. ■

NO—Go to step 10.

10. Check for continuity between ignition switch control unit 10P connector terminals No. 8 and No. 6.

IGNITION SWITCH CONTROL UNIT 10P CONNECTOR

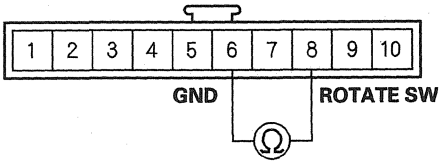

Terminal side of male terminals

Is there continuity?

YES—Replace the ignition switch control unit. ■

NO—Replace the keyless access control unit. ■

DTC B1675: Ignition Switch Control Unit (ROTATE SW) Circuit Open

NOTE: If you are troubleshooting multiple DTCs, be sure to follow the instructions in B-CAN System Diagnosis Test Mode A (see page 22-131).

1. Clear the DTCs with the HDS.
2. Turn the ignition switch to LOCK (0).
3. Insert the built-in key into the ignition switch.
4. Turn the ignition switch to ON (II), and to LOCK (0) ten times using the built-in key.
5. Check for DTCs with the HDS.

   Is DTC B1675 indicated?

   YES—Go to step 6.

   NO—Intermittent failure, the system is OK at this time. Check for loose or poor connections. ■
6. Turn the ignition switch to LOCK (0).
7. Disconnect keyless access control unit connector A (31P).
8. Disconnect the ignition switch control unit 10P connector.
9. Check for continuity between keyless access control unit connector A (31P) terminal No. 3 and ignition switch control unit 10P connector terminal No. 8.

IGNITION SWITCH CONTROL UNIT 10P CONNECTOR
Wire side of female terminals

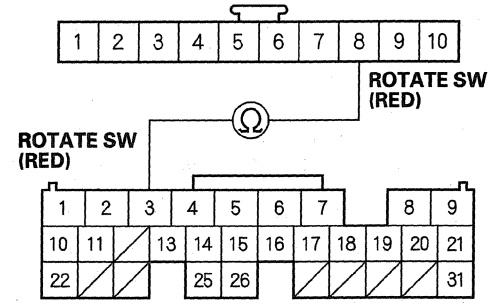

KEYLESS ACCESS CONTROL UNIT CONNECTOR A (31P)
Wire side of female terminals

Is there continuity?

YES—Go to step 10.

NO—Repair an open in the wire. ■

10. Turn the ignition switch to the ACC (I).
11. Check for continuity between ignition switch control unit 10P connector terminals No. 8 and No. 6.

IGNITION SWITCH CONTROL UNIT 10P CONNECTOR

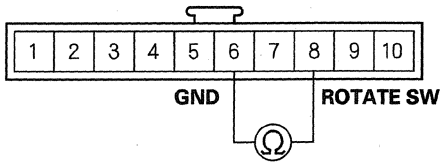

Terminal side of male terminals

Is there continuity?

YES—Replace the keyless access control unit. ■

NO—Replace the ignition switch control unit. ■

Symptom Troubleshooting Information

1. Symptom troubleshooting by the immobilizer indicator.

   The immobilizer and keyless access system condition can be checked by the immobilizer indicator lighting pattern.

   Normal operation:
   When the ignition switch is turned to ON (II) and the immobilizer code is identified, the immobilizer indicator comes on for 2 seconds, then goes off.
   The immobilizer indicator blinks five times when the ignition switch is turned to LOCK (0).

   +B line open:
   When the ignition switch is turned to ON (II) and the immobilizer code is identified, the immobilizer indicator comes on for 2 seconds, then goes off.
   The immobilizer indicator goes off when the ignition switch is turned to LOCK (0).

   Immobilizer code is not identified:
   When the ignition switch is turned to ON (II) but the immobilizer code is not identified, the immobilizer indicator comes on for 2 seconds, then blinks. The state of the keyless registration and IMOCD (S-NET) line can be checked by doing a system check and status log checks with the HDS.
   The immobilizer indicator goes off when the ignition switch is turned to LOCK (0).

   Immobilizer indicator does not come on:
   If the immobilizer indicator does not come on when the ignition switch is turned to ON (II), check for an open in the wire shown:

   - When the built-in key is used:
     - Check for continuity between the immobilizer control unit-receiver and keyless access control unit
     - Check for power to the keyless access control unit IG1 and IG2 line.
     - Check for continuity between the immobilizer control unit-receiver and gauge control m odule (IMOLMP line).
   - When the remote is used:
     - Check for power to the keyless access control unit IG1 and IG2 line.
     - Check for continuity between the immobilizer control unit-receiver and gauge control m odule (IMOLMP line).
     - Check for continuity between the keyless access control unit and body ground.

   NOTE: If the ignition switch is faulty (a short to power in the wire), the immobilizer code identification is not performed, so the indicator does not come on. But the engine is able to start in this condition.

   Immobilizer indicator does not go off:
   If the immobilizer indicator does not go off after the ignition switch is turned to ON (II), check for a short in the red wire between the gauge control module and immobilizer control unit-receiver/keyless access control unit.

2. Symptom troubleshooting for an open power supply and ground circuit.

If a malfunction occurs in the immobilizer or keyless access system circuit power supply and ground lines, identify the lines to check with this table:

Operation \ Possible line		+B1 line open	+B2 line open	+B1 and +B2 lines open	IG line open	GND1 line open	GND2 line open	GND1 and GND2 lines open	Keyless access control unit not connected
LOCK, UNLOCK operation	Door key cylinder	○	○	○	○	○	○	○	○
	Keyless entry	○	○	×	○	○	○	×	×
	Remote	○	○	×	○	○	○	×	×
Immobilizer indicator comes on and stays on	Immobilizer key (built-in key)	ON	ON	ON	×	ON	ON	×	×
	Remote	ON	ON	×*	×	ON	ON	×*	×*
Registration with the built-in key with the ignition switch ON (II)	Immobilizer control unit-receiver	○	○	○	×	○	○	×	×
	Keyless access control unit	○	○	○	×	○	○	×	×
Registration with the remote with the ignition switch ON (II)	Immobilizer control unit-receiver	○	○	×*	×	○	○	×*	×*
	Keyless access control unit	○	○	×*	×	○	○	×*	×*
Steering lock released	Immobilizer key (built-in key)	○	○	○	○	○	○	○	○
	Remote	○	○	×	○	○	○	×	×
Engine start	Immobilizer key (built-in key)	○	○	○	×	○	○	×	×
	Remote	○	○	×*	×	○	○	×*	×*

*: Ignition switch knob is not released.
○: Normal operation.
×: does not operate.
ON: immobilizer indicator light on or flashing.

(cont'd)

Symptom Troubleshooting Information (cont'd)

3. General check before troubleshooting.

   Before troubleshooting the keyless access system, check the following items, and solve applicable issues.

   - Check for poor connection at the ignition switch control unit and the keyless access control unit.
   - Check for DTCs with the HDS, if there is a DTC indicated, troubleshoot the DTC first.
   - Before testing, troubleshoot the keyless access system first using SELF CHECK, and if any malfunction is found, troubleshoot it first.
   - Make sure the remote is not in a purse with coins, wrapped with any metal material, or placed near a mobile phone or computer.
   - Make sure the vehicle battery is fully charged.
   - Make sure the remote batteries are not low; if they are replace the batteries.
   - Make sure a different remote is not being used; only use the Acura-approved remote.
   - Make sure the remote is not attached to a key ring or key case, if it is, remove the key from it.
   - Make sure aftermarket accessories are not installed: remove any aftermarket accessories.
   - Make sure aftermarket accessories are not connected to the IMOCD (S-NET) line: disconnect any aftermarket accessories from the IMOCD (S-NET) line.
   - Make sure there is no electrical interference nearby: avoid areas with electrical interference.

4. How to troubleshoot without the built-in key.

   - Connect the HDS to the data link connector, then turn the ignition switch to ON (II) with the remote.
   - Check the system checks 1 and 2 and status log with the HDS.
   - Check for DTCs

5. System Checks.

If a System Check 1 or 2 result is indicated on the display of the HDS, troubleshoot the items based on these Check tables.

System Check 1

System Check No.	Possible cause	Check items
A-2	Remote is mismatched	• Remote test • LF interior antennas test • Continuity check in the wire between the keyless access control unit and RF units • Replace RF unit
A-3	Operated without Remote	
B-1	PCM is replaced	Register the PCM
B-2	PCM is not registered correctly. Communication error caused by low battery voltage between the PCM and the keyless access control unit	Check for loose or poor connections at the (IMOCD (S-NET))
G-1		Check for loose or poor connections at the (IMOCD (S-NET))
C-1	Imoes unit is not registered correctly	Register the imoes unit
C-2	Imoes unit is not registered correctly	Check for an open or a short in the wire (IMOCD (S-NET)), if OK, check pinfits and connections at the (IMOCD (S-NET))
	Communication error caused by low battery voltage between the imoes unit and the keyless access control unit	
	Communication error caused by electrical noise between the imoes unit and the keyless access control unit	
C-3 G-5	Ignition switch control unit is not registered correctly	Register the ignition switch control unit
C-4	Ignition switch control unit is not registered correctly	Check for an open or a short in the wire (IGNTRX line), if OK, check for loose or poor connections at the (IMOCD (S-NET))
	Communication error caused by low battery voltage between the ignition switch control unit and the keyless access control unit	
	Communication error caused by electrical wave noise between the ignition switch control unit and the keyless access control unit	

System Check 2

System Check No.	Possible cause	Check items
D-1	IMOCD (S-NET) line short	Check for a short in the wire (IMOCD (S-NET))
	Communication error caused by low battery voltage between the PCM and the keyless access control unit	
	Communication error caused by electrical noise between the PCM and the keyless access control unit	
D-2	Blown fuse	• Blown fuse • Check for an open in the wire (IMOCD (S-NET))
	Open in the wire between the imoes unit and the keyless access control unit	
	Communication error caused by low battery voltage between the imoes unit and the keyless access control unit	
	Communication error caused by electrical noise between the imoes unit and the keyless access control unit	
D-3	Blown fuse	• Continuity for an open or a short in the wire (IMOCD (S-NET)) between the keyless access control unit and RF units • Check the PCM
	Open in the wire between the PCM and the keyless access control unit	
	Communication error caused by low battery voltage between the PCM and the keyless access control unit	
	Communication error caused by electrical noise between the PCM and the keyless access control unit	
D-4	IGNTRX line short	Check for a short in the wire (IGNTRX line)
	Faulty ignition switch control unit	
D-5	IGNTRX line open	Check for an open in the wire (IGNTRX line)
	Faulty ignition switch control unit	
G-2	Keyless access control unit is replaced	• Register the immobilizer control unit-receiver
G-3	Imoes unit is replaced	• Register the imoes unit

(cont'd)

Symptom Troubleshooting Information (cont'd)

6. Status Log.

If the symptom does not occur again during the symptom check, check the Status Log with the HDS, and troubleshoot the items based on this table:

Check the status log count. Troubleshoot the status with the highest count first. If no counts are listed, the keyless access system is OK. Continue with normal symptom troubleshooting.

Status Log No.	Possible cause
B-1	PCM was not registered correctly.
	Low battery voltage
	Poor connections or loose terminals at the keyless access control unit
	Electrical noise
B-2	PCM was not registered correctly
	Low battery voltage
	Poor connections or loose terminals at the keyless access control unit
	Electrical noise
C-1	Imoes unit was not registered correctly.
	Low battery voltage
	Poor connections or loose terminals at the keyless access control unit
	Electrical noise
C-2	Imoes unit was not registered correctly
	Low battery voltage
	Poor connections or loose terminals at the keyless access control unit
	Electrical noise
D-1	Low battery voltage
	Poor connections or loose terminals between the immobilizer control unit-receiver and the PCM
	Electrical noise
D-2	Blown fuse
	An open in the wire between the imoes unit and the immobilizer control unit-receiver
	Faulty keyless access control unit
	Low battery voltage
	Poor connections or loose terminals between the imoes unit and the PCM
	Electrical noise
D-3	Blown fuse
	An open or a short in the wire between the keyless access control unit and the PCM
	Low battery voltage
	Poor connections or loose terminals between the keyless access control unit and the PCM
	Electrical noise

Symptom Troubleshooting

Engine does not start with the remote

NOTE: Before troubleshooting, check the items listed in "General Check before Troubleshooting".

1. Carry the remote in the vehicle, and turn the ignition switch to ON (II).
2. Check for the LED indication of the remote.

   Does the LED blink?

   YES—Go to step 3.

   NO—Go to step 7.
3. Turn the ignition switch to ON (II) five times while turning the steering slightly right and left.

   Can you turn the ignition switch to ON (II)?

   YES—Go to step 4.

   NO—Go to step 8.
4. Check the starter operation.

   Does the starter run?

   YES—Go to step 5.

   NO—Check the starting system. ■
5. Try to start the engine.

   Does the engine start?

   YES—Go to step 6.

   NO—Go to step 10.
6. Try to stop the engine.

   Does the engine stop?

   YES—Go to step 10.

   NO—Go to the Status Log (see step 6 on page 22-612). ■
7. Remove the remote batteries, then install them again.

   Does the LED blink when the batteries are installed?

   YES—Check for an open in these wires:

   - Keyless access control unit +B1 and +B2 lines. ■
   - GND (LG1 and LG2) lines. ■

   NO—Replace the remote batteries, and recheck the system. ■
8. Check the No. 7 (10 A) fuse in the driver's under-dash fuse/relay box.

   Is the fuse good?

   YES—Go to step 9.

   NO—Replace the fuse, and recheck. ■
9. Check the keyless access system DTCs with the HDS.

   Are any DTCs indicated?

   YES—Go to the indicated DTCs troubleshooting. ■

   NO—Go to System Check (see step 5 on page 22-611). ■
10. Check the immobilizer indicator lighting pattern.

    Does the immobilizer indicator work normally?

    YES—The keyless access system is OK at this time, check the engine system. ■

    NO—Refer to the appropriate Symptom Troubleshooting. ■

Keyless Access Indicator Circuit Troubleshooting

Normal operation: The keyless access indicator comes on for 2 seconds when the ignition switch is turned to ON (II), then turned to LOCK (0).

NOTE: If the keyless access control unit is new and not registered, the keyless access indicator comes on and stays on until the immobilizer code is registered.

1. Turn the ignition switch to LOCK (0), and then back to ON (II).
2. Check the keyless access indicator.

   Does the keyless access indicator come on for 2 seconds, then go off?

   YES—The system is OK at this time. ■

   NO—If the indicator does not come on, go to step 3. If the indicator stays on, go to step 15.
3. Turn the ignition switch to LOCK (0).
4. Connect the HDS to the data link connector (DLC).
5. Select FUNCTION TEST, then enter KEYLESS ACCESS INDICATOR DRIVING.
6. Check the keyless access indicator operation.

   Does the keyless access indicator come on?

   YES—Replace the keyless access control unit. ■

   NO—Go to step 7.
7. Check the other indicators in the gauge control module.

   Do the other indicators come on?

   YES—Go to step 8.

   NO—Do to the gauge control module input test (see page 22-155). If the input test is OK, replace the gauge control module. ■
8. Turn the ignition switch to LOCK (0).
9. Disconnect keyless access control unit connector A (31P) and gauge control module connector B (28P).
10. Check for continuity between keyless access control unit connector A (31P) terminal No. 31 and gauge control module connector B (28P) terminal No. 10.

KEYLESS ACCESS CONTROL UNIT CONNECTOR A (31P)
Wire side of female terminals

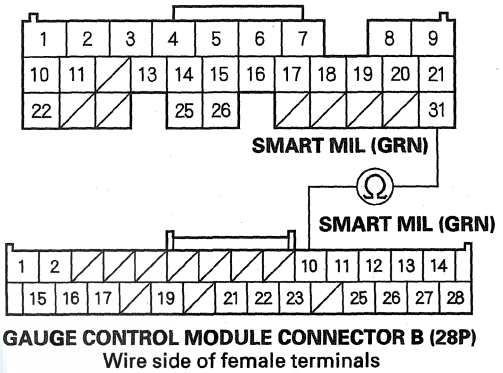

GAUGE CONTROL MODULE CONNECTOR B (28P)
Wire side of female terminals

Is there continuity?

YES—Go to step 11.

NO—Repair an open in the wire. ■

11. Reconnect keyless access control unit connector A (31P).
12. Connect an ohmmeter between gauge control module connector B (28P) terminal No. 10 and body ground.

GAUGE CONTROL MODULE CONNECTOR B (28P)

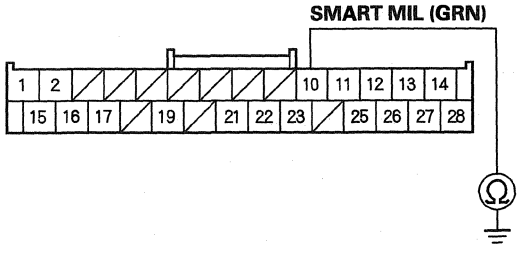

Wire side of female terminals

13. Turn the ignition switch to ON (II).
14. Select FUNCTION TEST, then enter KEYLESS ACCESS INDICATOR DRIVING.

    Is there continuity while the FUNCTION TEST is on?

    YES—Replace the gauge control module. ■

    NO—Replace the keyless access control unit. ■
15. Check for DTCs with the HDS.

    Are there any DTCs?

    YES—Go to the indicated DTC troubleshooting. ■

    NO—Go to step 16.
16. Turn the ignition switch to LOCK (0).
17. Disconnect keyless access control unit connector A (31P).
18. Turn the ignition switch to ON (II).
19. Check the keyless access indicator operation.

    Does the keyless access indicator turn off?

    YES—Replace the keyless access control unit. ■

    NO—Go to step 20.
20. Turn the ignition switch to LOCK (0).
21. Disconnect gauge control module connector B (28P).
22. Check for continuity between keyless access control unit connector A (31P) terminal No. 31 and body ground.

KEYLESS ACCESS CONTROL UNIT CONNECTOR A (31P)

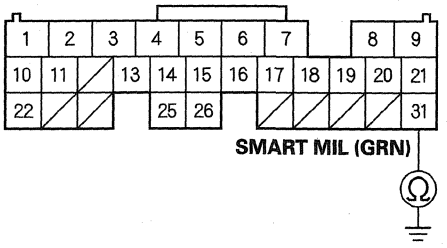

Wire side of female terminals

Is there continuity?

YES—Repair a short to ground in the wire. ■

NO—Replace the gauge control module. ■

Keyless Buzzer Circuit Troubleshooting

1. Connect the HDS to the data link connector (DLC).
2. Turn the ignition switch to ON (II).
3. Check the "CUSTOMIZE SETUP" information on the multi-information display.

   Does the keyless buzzer (KEYLESS LOCK AKNOWLEGEMENT) information indicate off?

   YES—Change to ON.■

   NO—Go to step 4.
4. Turn the ignition switch to LOCK (0).
5. Disconnect the keyless buzzer 2P connector.
6. Check for continuity between keyless buzzer 2P connector terminal No. 2 and body ground.

KEYLESS BUZZER 2P CONNECTOR

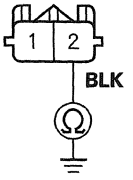

Wire side of female terminals

Is there continuity?

YES—Go to step 7.

NO—Repair an open in the wire or poor ground (G701).■

7. Disconnect driver's under-dash fuse/relay box connector P (30P).
8. Connect keyless buzzer 2P connector terminal No. 1 to body ground with a jumper wire.

KEYLESS BUZZER 2P CONNECTOR

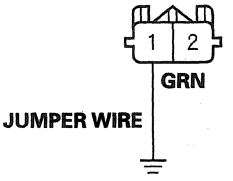

Wire side of female terminals

9. Check for continuity between driver's under-dash fuse/relay box connector P (30P) terminal No. 29 and body ground.

DRIVER'S UNDER-DASH FUSE/RELAY BOX CONNECTOR P (30P)

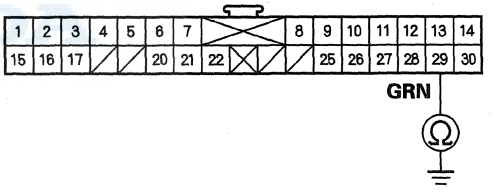

Wire side of female terminals

Is there continuity?

YES—Go to step 10.

NO—Repair an open in the wire.■

10. Remove the jumper wire.

11. Check for continuity between driver's under-dash fuse/relay box connector P (30P) terminal No. 29 and body ground.

DRIVER'S UNDER-DASH FUSE/RELAY BOX CONNECTOR P (30P)

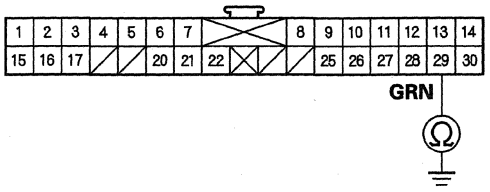

Wire side of female terminals

Is there continuity?

YES—Repair a short to ground in the wire. ■

NO—Substitute a known-good keyless access control unit and recheck. If there is still a malfunction, the MICU must be faulty, replace the driver's under-dash fuse/relay box (see page 22-88). ■

Touch Sensor Circuit Troubleshooting

1. Connect the HDS to the data link connector (DLC).
2. Turn the ignition switch to ON (II).
3. Clear the freeze data with the HDS.
4. Select HISTORY DATA, and record ON/OFF information for the following touch sensors:

   NOTE: When the freeze data is cleared, the information indicates "OFF".
   - SW SMA UNLOCKDR
   - SW SMA UNLOCKAS
   - SW SMA LOCKDR
   - SW SMA LOCKAS
5. Turn the ignition switch to LOCK (0).
6. Get out of the vehicle with the remote, and press the driver's or front passenger's door outer handle touch sensor.
7. Check the ON/OFF information.

   Is all the information changed from OFF to ON?

   YES—The system is OK at this time. ■

   NO—Go to step 8.
8. Disconnect the faulty outer handle touch sensor 8P connector.
9. Check for continuity between body ground and outer handle touch sensor 8P connector terminals No. 5 and No. 8 individually.

DRIVER'S (or FRONT PASSENGER'S) DOOR OUTER HANDLE TOUCH SENSOR 8P CONNECTOR

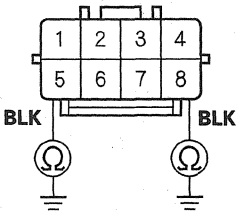

Wire side of female terminals

Is there continuity?

YES—Go to step 10.

NO—Repair an open in the wire or poor ground (G601: driver's side, G506: passenger's side). ■

10. Measure the voltage between outer handle touch sensor 8P connector terminal No. 1 and body ground.

DRIVER'S (or FRONT PASSENGER'S) DOOR OUTER HANDLE TOUCH SENSOR 8P CONNECTOR

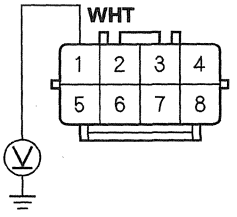

Wire side of female terminals

Is there battery voltage?

YES—Go to step 11.

NO—Blown No. 7 (10 A) fuse in the driver's under-dash fuse/relay box. If the fuse is OK, check the wire between the touch sensor and the driver's under-dash fuse/relay box (see page 22-88). ■

11. Disconnect keyless access control unit connector A (31P) and connector B (24P).

12. Connect driver's (or front passenger's)* door outer handle touch sensor 8P connector terminals No. 2 and No. 6 to body ground with jumper wires.

DRIVER'S (or FRONT PASSENGER'S)* DOOR OUTER HANDLE TOUCH SENSOR 8P CONNECTOR

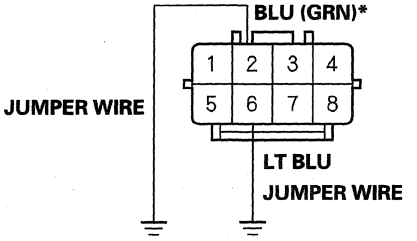

Wire side of female terminals

*: FRONT PASSENGER'S

13. Check for continuity between keyless access control unit connector A (31P) terminals No. 19 and No. 20 and body ground (for front passenger's door touch sensor) or between keyless access control unit connector B (24P) terminals No. 22 and No. 23 and body ground (for driver's door touch sensor).

KEYLESS ACCESS CONTROL UNIT CONNECTOR A (31P)

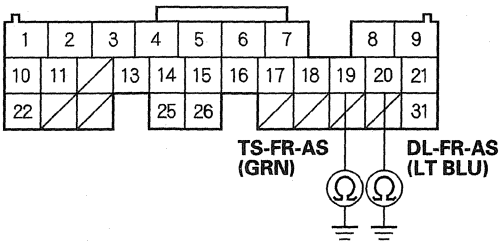

Wire side of female terminals

KEYLESS ACCESS CONTROL UNIT CONNECTOR B (24P)

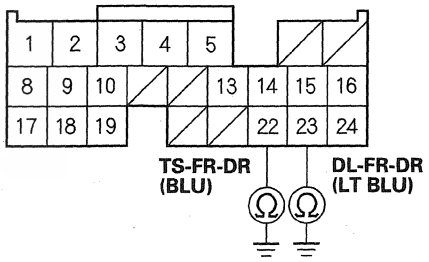

Wire side of female terminals

Is there continuity?

YES—Go to step 14.

NO—Repair an open in the wire. ■

(cont'd)

Touch Sensor Circuit Troubleshooting (cont'd)

14. Remove the jumper wires from the touch sensors.

15. Check for continuity between keyless access control unit connector A (31P) terminals No. 19 and No. 20 and body ground (for front passenger's door touch sensor), or between keyless access control unit connector B (24P) terminals No. 22 and No. 23 and body ground (for driver's door touch sensor).

KEYLESS ACCESS CONTROL UNIT CONNECTOR A (31P)

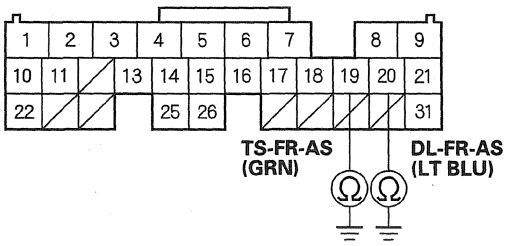

Wire side of female terminals

KEYLESS ACCESS CONTROL UNIT CONNECTOR B (24P)

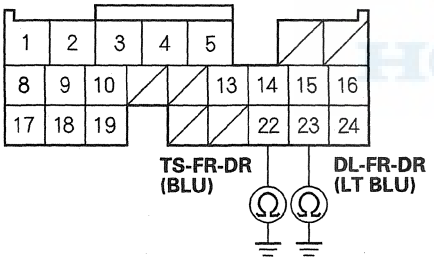

Wire side of female terminals

Is there continuity?

YES—Repair a short to ground in the wire. ■

NO—Substitute a known-good touch sensor and recheck. If there is still a malfunction, replace the keyless access control unit. ■

Door and Trunk LF Antenna Test

NOTE: Before testing, check for DTCs. If any DTCs are indicated, troubleshoot the indicated DTCs first.

1. Connect the HDS to the data link connector (DLC).
2. Turn the ignition switch to ON (II) with the built-in key.
3. Select KEYLESS ACCESS from the SYSTEM SELECT menu with the HDS.
4. Select SELF CHECK and if any malfunction is found, troubleshoot it first.
5. Select FUNCTION TEST, and do the antenna driving test by checking the transmitting areas (A) between the LF antenna and the remote.

LF Antenna Location	HDS Indication (Function Test)
Driver's door LF antenna	Driver Antenna Driving
Front passenger's door LF antenna	Front Passenger Antenna Driving
Rear bumper LF antenna	Trunk/Tailgate Driver Antenna Driving

NOTE:
- Function Test cannot operate at the same time, check the LF antennas one at a time.
- Test the transmitting area at about 35.4 in (90 cm) height from the ground.
- The LED blinks when the remote is within the shaded areas.

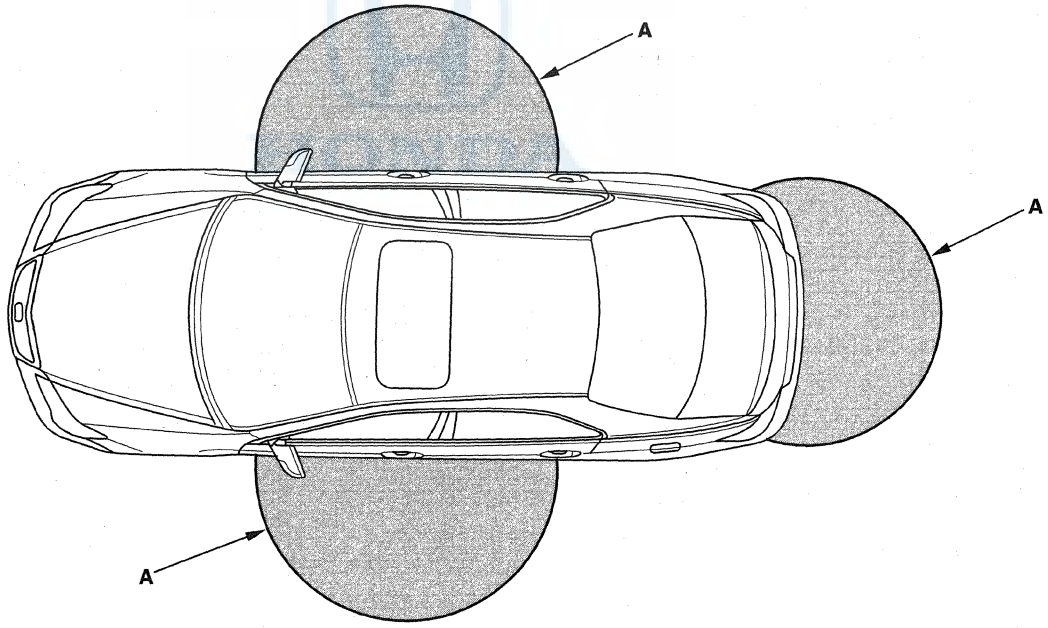

Interior LF Antenna Test

NOTE: Before testing, check for DTCs. If any DTCs are indicated, troubleshoot the indicated DTCs first.

1. Connect the HDS to the data link connector (DLC).
2. Turn the ignition switch to ON (II) with the built-in key.
3. Select KEYLESS ACCESS from the SYSTEM SELECT menu with the HDS.
4. Select SELF CHECK, and if any malfunction is found, troubleshoot it first.
5. Select FUNCTION TEST, and do the antenna driving test by checking the transmitting area (A) between the LF antenna and the remote (except on the dashboard, in the glove box, door pockets, console box, and other enclosed areas).

LF Antenna Location	HDS Indication (Function Test)
Front Interior LF antenna	Front Interior Antenna Driving
Rear Interior LF antenna	Rear Interior Antenna Driving
Trunk interior/Rear shelf LF antenna	Trunk interior/Rear shelf LF Antenna Driving

NOTE: Function Test cannot operate at the same time, check the LF antennas one at a time.

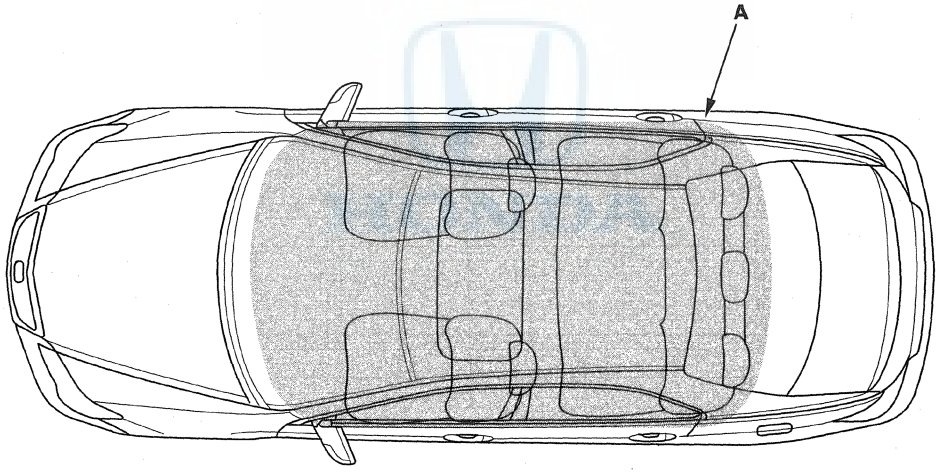

Control Unit Input Test

1. Turn the ignition switch to LOCK (0).
2. Remove the driver's dashboard undercover (see page 20-100), and the driver's dashboard lower cover (see page 20-100).
3. Disconnect the connectors (A) from the keyless access control unit (B).

   NOTE: All connector views are wire side of female terminals.

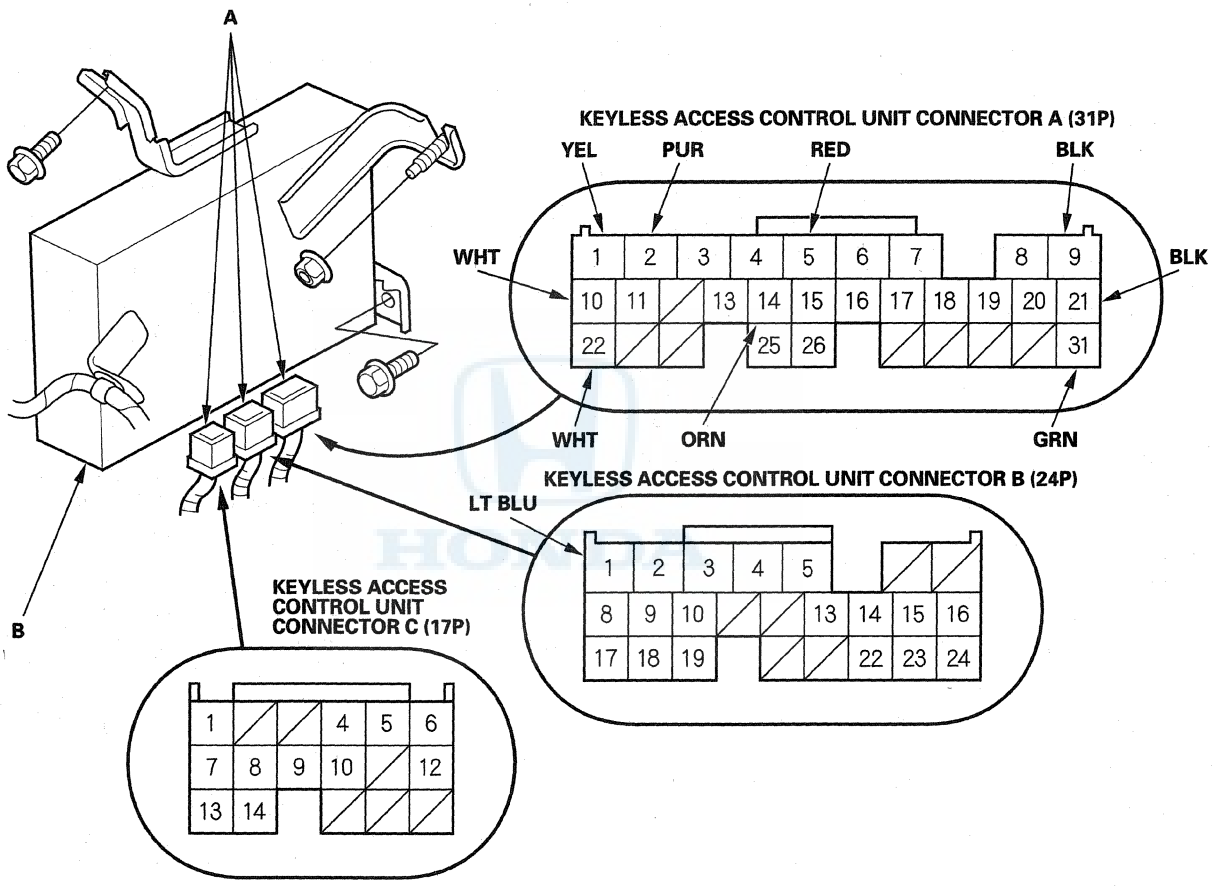

4. Inspect the connector and socket terminals to be sure they are all making good contact.

   - If the terminals are bent, loose or corroded, repair them as necessary, and recheck the system.
   - If the terminals look OK, go to step 5.

(cont'd)

Control Unit Input Test (cont'd)

5. With the connectors still disconnected, do these input tests at the following connector.

   - If any test indicates a problem, find and correct the cause, then recheck the system.
   - If all the input tests prove OK, go to step 6.

Cavity	Wire	Test condition	Test: Desired result	Possible cause if desired result is not obtained
A5	RED	Ignition switch ON (II)	Attach to ground: The immobilizer indicator should come on.	• Faulty gauge control module • An open in the wire
A31	GRN	Ignition switch ON (II)	Attach to ground: The keyless access indicator should come on.	• Faulty gauge control module • An open in the wire

6. Reconnect the connectors to the keyless access control unit, and do these input tests at the following connectors.

   - If any test indicates a problem, find and correct the cause, then recheck the system.
   - If all the input tests prove OK, the control unit must be faulty; replace it.

Cavity	Wire	Test condition	Test: Desired result	Possible cause if desired result is not obtained
A9	BLK	Under all conditions	Measure the voltage to ground: There should be less than 0.2 V.	• Poor ground (G501) • An open in the wire
A21	BLK	Under all conditions	Measure the voltage to ground: There should be less than 0.2 V.	• Poor ground (G501) • An open in the wire
A1	YEL	Ignition switch ON (II)	Measure the voltage to ground: There should be battery voltage.	• Blown No. 19 (20 A) fuse in the driver's under-dash fuse/relay box • An open in the wire
A2	PUR	Ignition switch ACC (I)	Measure the voltage to ground: There should be battery voltage.	• Blown No. 32 (10 A) fuse in the driver's under-dash fuse/relay box • An open in the wire
A10	WHT	Under all conditions	Measure the voltage to ground: There should be battery voltage.	• Blown No. 6 (7.5 A) fuse in the driver's under-dash fuse/relay box • Blown No. 15 (40 A) fuse in the under-hood fuse/relay box • An open in the wire
A22	WHT	Under all conditions	Measure the voltage to ground: There should be battery voltage.	• Blown No. 15 (40 A) fuse in the under-hood fuse/relay box • Blown No. 7 (10 A) fuse in the driver's under-dash fuse/relay box • An open in the wire
A14	ORN	Parking brake pedal pressed	Measure the voltage to ground: There should be less than 0.2 V.	• Faulty parking brake switch • An open in the wire
		Parking brake pedal released	Measure the voltage to ground: There should be battery voltage.	• Faulty parking brake switch • A short to ground in the wire
B1	LT BLU	Trunk lid outer handle switch pulled	Measure the voltage to ground: There should be less than 0.2 V.	• Poor ground (G652) • Faulty trunk lid outer handle switch • An open in the wire
		Trunk lid outer handle switch released	Measure the voltage to ground: There should be at least 5 V.	• Faulty trunk lid outer handle switch • A short to ground in the wire

RF Unit 1 Replacement

1. Remove the navigation display unit (see page 23-256).
2. Disconnect the 6P connector (A) from RF unit 1 (B).

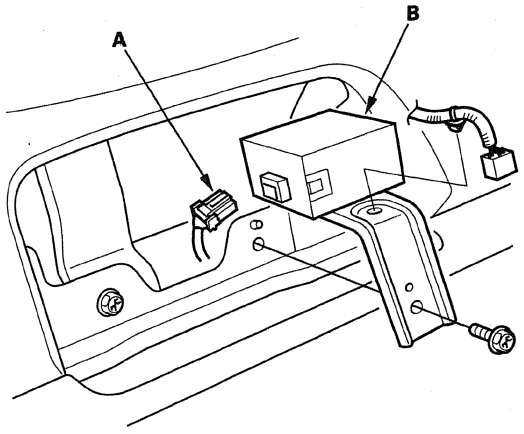

3. Remove the bolt and RF unit 1.
4. Install the unit in the reverse order of removal.

RF Unit 2 Replacement

1. Remove the rear shelf (see page 20-80).
2. Disconnect the 6P connector (A) from RF unit 2 (B).

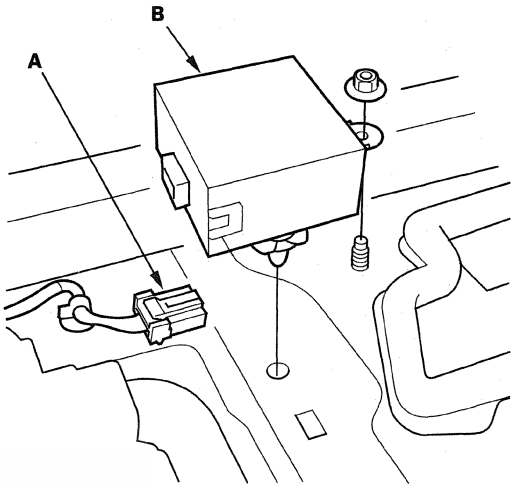

3. Remove the nut and RF unit 2.
4. Install the unit in the reverse order of removal.

Front Interior LF Antenna Replacement

1. Remove the audio unit (see page 23-106).
2. Remove the two bolts from the front interior LF antenna (A).

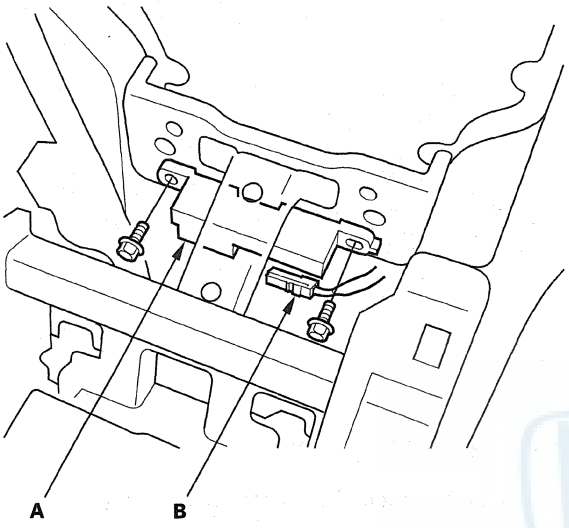

3. Disconnect the 2P connector (B) from the front interior LF antenna.
4. Install the antenna in the reverse order of removal.

Rear Interior LF Antenna Replacement

1. Remove the center console rear cover (see page 20-92).
2. Disconnect the 2P connector (A) from the rear interior LF antenna (B).

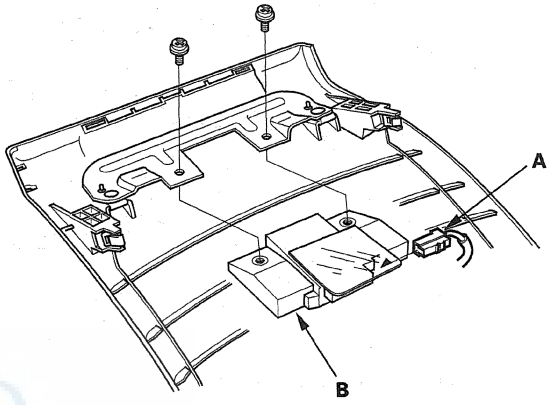

3. Remove the two screws and the rear interior LF antenna.
4. Install the antenna in the reverse order of removal.

Rear Shelf LF Antenna Replacement

1. Remove the rear shelf (see page 20-80).
2. Remove the rear shelf under cover (see page 20-80).
3. Disconnect the 2P connector (A) from the rear shelf LF antenna (B).

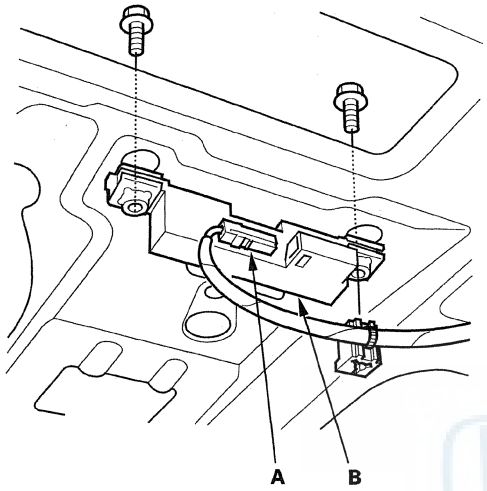

4. Remove the two bolts and the rear shelf LF antenna.
5. Install the antenna in the reverse order of removal.

Rear Bumper LF Antenna Replacement

1. Remove the rear bumper (see page 20-153).
2. Disconnect the 2P connector (A) from the rear bumper LF antenna (B).

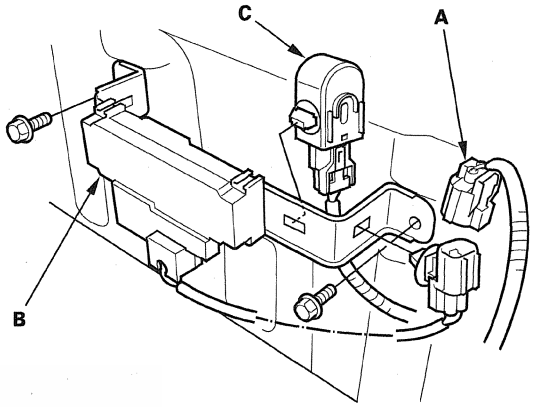

3. Remove the keyless buzzer (C).
4. Remove the two bolts and the rear bumper LF antenna.
5. Install the antenna in the reverse order of removal.

Keyless Buzzer Replacement

1. Remove the rear bumper (see page 20-153).
2. Disconnect the 2P connector (A) from the keyless buzzer (B), then remove the keyless buzzer.

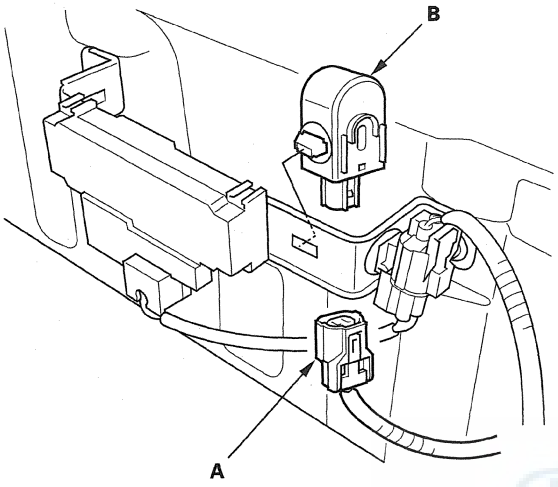

3. Install the buzzer in the reverse order of removal.

Ignition Switch Knob Replacement

1. Remove the ignition switch knob (A). Then remove the two screws (B) and lower knob portion from the ignition key cylinder (C).

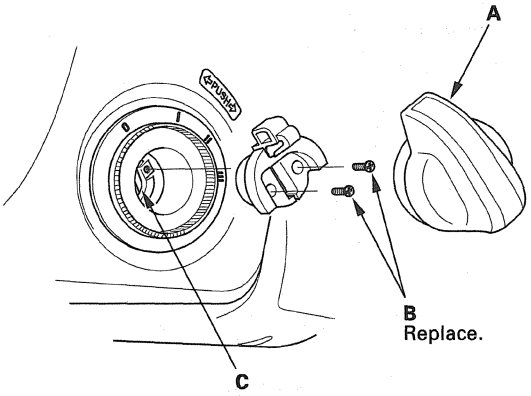

2. Replace the screws with new ones, and install the knob in the reverse order of removal.

Ignition Switch Control Unit Registration

1. Turn the ignition switch to ON (II).
2. Connect the HDS to the data link connector.
3. Select KEYLESS ACCESS from SYSTEM SELECT menu, then enter REGISTRATION.
4. Select REPLACE IGNITION SWITCH CONTROL UNIT, and register the ignition switch control unit.
5. Turn the ignition switch to LOCK (0), and verify proper operation.

HONDA

SUPPLEMENTAL RESTRAINT SYSTEM (SRS) (If Audio, Navigation, and Telematics maintenance is required)

The Acura RL SRS includes a driver's airbag in the steering wheel hub, a passenger's airbag in the dashboard above the glove box, seat belt tensioners in the front seat belt retractors, side curtain airbags in the sides of the roof, and side airbags in the front seat-backs. Information necessary to safely service the SRS is included in this Service Manual. Items marked with an asterisk (*) on the contents page include or are located near SRS components. Servicing, disassembling, or replacing these items require special precautions and tools, and should be done by an authorized Acura dealer.

- To avoid rendering the SRS inoperative, which could lead to personal injury or death in the event of a severe frontal or side collision, all SRS service work should be done by an authorized Acura dealer.
- Improper service procedures, including incorrect removal and installation of the SRS, could lead to personal injury caused by unintentional deployment of the airbags, side airbags, and/or side curtain airbags.
- Do not bump or impact the SRS unit, front impact sensors, side impact sensors, or rear safing sensor, especially when the ignition switch is in ON (II), or for at least 3 minutes after the ignition switch is turned to LOCK (0); otherwise, the system may fail in a collision, or the airbags may deploy.
- SRS electrical connectors are identified by yellow color coding. Related components are located in the steering column, center console, dashboard, driver's dashboard lower cover, in the dashboard above the glove box, in the front seats, in the roof side, and around the floor. Do not use electrical test equipment on these circuits.

HONDA

Audio, Navigation, and Telematics

Audio, Navigation, and Telematics
Special Tools 23-2

Audio System
Component Location Index 23-3
Symptom Troubleshooting Index 23-5
System Description 23-7
Circuit Diagram 23-33
Self-diagnostic Function 23-38
Error Codes 23-42
Symptom Troubleshooting 23-43
Sound Quality diagnosis 23-100
* Audio Unit Removal/Installation 23-106
Audio-HVAC Subdisplay Unit Removal/Installation 23-107
Speaker Test/Replacement 23-108
Stereo Amplifier Removal/Installation 23-111
AcuraLink Control Unit (XM receiver) Removal/Installation 23-111
XM Receiver Removal/Installation 23-112
Auxiliary Jack Assembly Replacement 23-112
Active Noise Cancellation Unit Removal/Installation 23-113
Active Noise Cancellation Microphone Removal/Installation 23-113
USB Adapter Unit Replacement 23-114
USB Jack Replacement 23-114
* Audio Remote Switch Test 23-115
AM/FM Antenna Amplifier Replacement 23-115
XM Antenna Replacement 23-116
AM/FM Antenna Repair 23-116

Navigation System
Component Location Index 23-117
General Troubleshooting Information 23-119
DTC Troubleshooting Index 23-129
Symptom Troubleshooting Index 23-131
System Description 23-133
Circuit Diagram 23-160
System Diagnostic Mode 23-164
DTC Troubleshooting 23-192
Symptom Troubleshooting 23-223
Forced Starting of Display 23-254
DVD-ROM/CD-ROM Replacement 23-254
* Navigation Unit Removal/Installation 23-255
Navigation Display Unit Removal/Installation 23-256
Interface Dial Removal/Installation 23-256
GPS Antenna Removal/Installation 23-257
* Voice Control Switch Test 23-257
Rearview Camera Removal/Installation 23-258

AcuraLink
Component Location Index 23-259
General Troubleshooting Information 23-260
DTC Troubleshooting Index 23-261
Symptom Troubleshooting Index 23-262
System Description 23-263
Circuit Diagram 23-268
Self-diagnostic Function 23-271
DTC Troubleshooting 23-283
Symptom Troubleshooting 23-288
AcuraLink Control Unit Update 23-294

HandsFreeLink System
Component Location Index 23-295
General Troubleshooting Information 23-296
DTC Troubleshooting Index 23-306
Symptom Troubleshooting Index 23-307
System Description 23-309
Circuit Diagram 23-311
HFL System Troubleshooting 23-313
DTC Troubleshooting 23-314
Symptom Troubleshooting 23-321
* HFL Switch Test/Replacement 23-337
Control Unit Input Test 23-338
HFL-Navigation Microphone Removal/Installation 23-339
HandsFreeLink Control Unit Removal/Installation 23-339



Special Tools

Ref. No.	Tool Number	Description	Qty
①	07AAZ-SDBA100	Diagnostics CD	1
②	07AAZ-SDBA200 (ABEX-TCD-725B)	Skip Test CD	1
③	07AAZ-SDBA300 (ABEX-TCD-721)	Skip Test CD	1
④	07PAZ-0010100	SCS Service Connector	1

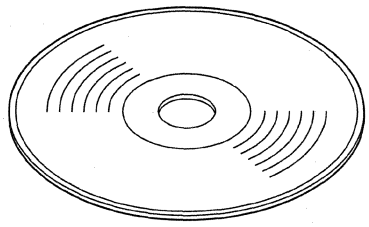

①, ②, ③

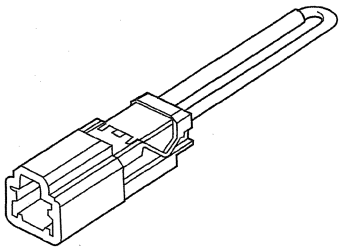

④

Component Location Index

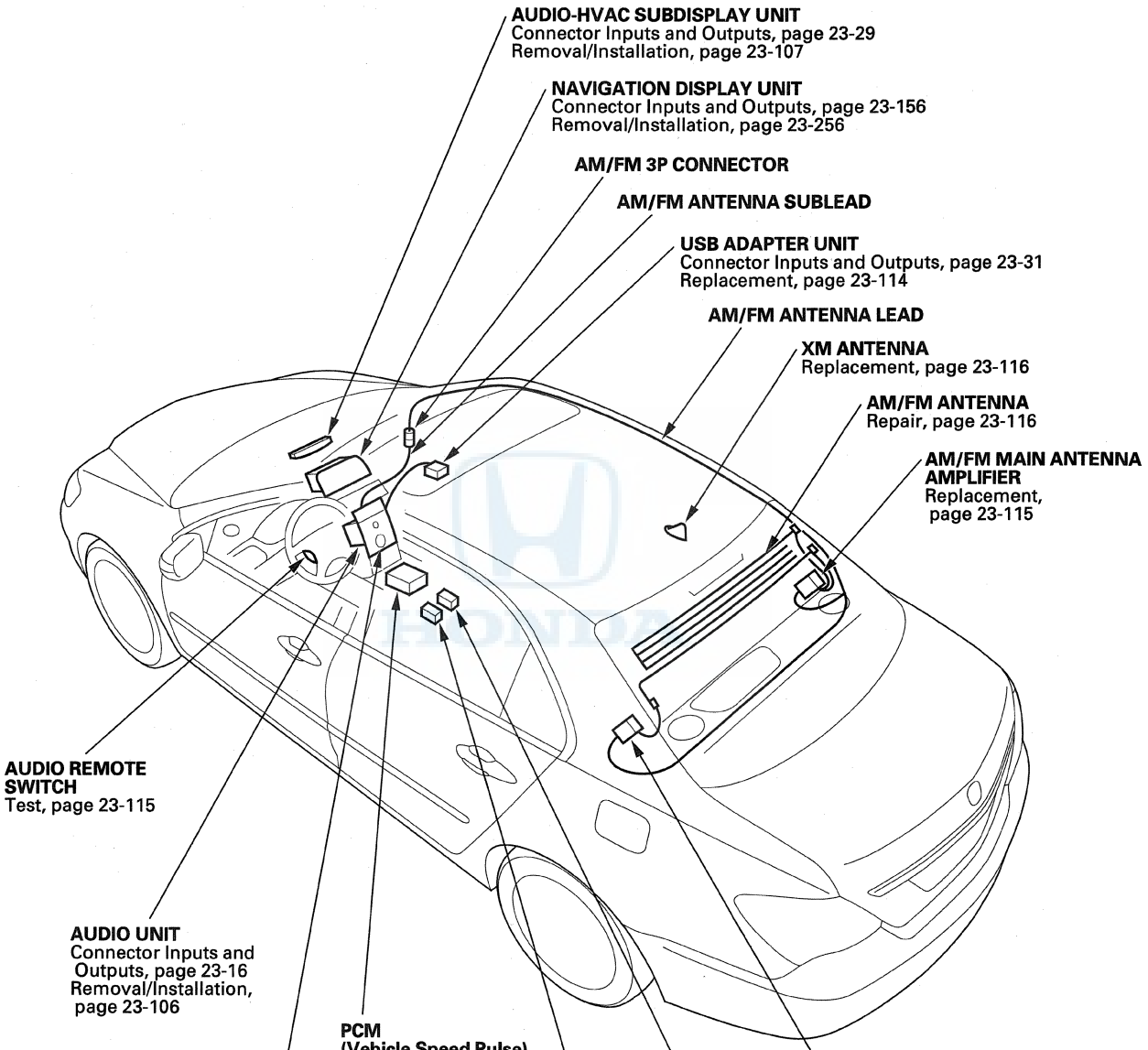

(cont'd)

Component Location Index (cont'd)

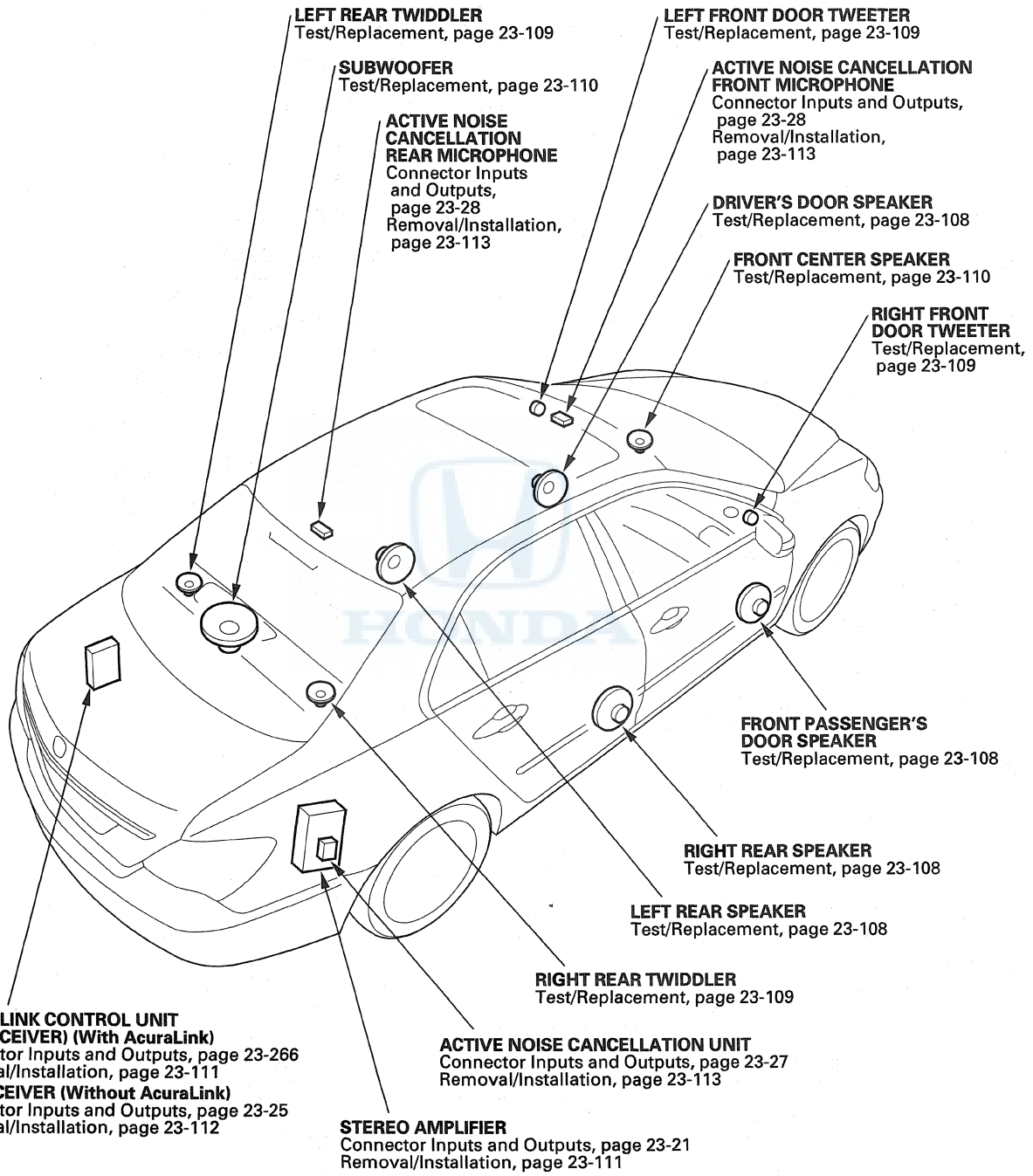

Symptom Troubleshooting Index

Symptom	Diagnostic procedure	Also check for
Poor AM or FM radio reception or interference	Symptom Troubleshooting (see page 23-43)	• AM/FM antenna lead and/or sublead short or open in the wire • Antenna module unit
Audio unit power switch will not turn on (No information display and no sound)	Symptom Troubleshooting (see page 23-47)	
Audio unit power switch will not turn off	Symptom Troubleshooting (see page 23-48)	
No sound is heard from the speaker(s) (display is normal)	Symptom Troubleshooting (see page 23-49)	
Audio system sound is weak or distorted (display is normal)	Symptom Troubleshooting (see page 23-54)	
Auxiliary input sound is low or cannot be heard	Symptom Troubleshooting (see page 23-54)	
Radio preset memory is lost	Symptom Troubleshooting (see page 23-56)	
Volume does not change	Symptom Troubleshooting (see page 23-57)	
Radio tuner does not change stations	Symptom Troubleshooting (see page 23-58)	
Audio unit button illumination does not work	Symptom Troubleshooting (see page 23-58)	
Audio remote switch does not work properly	Symptom Troubleshooting (see page 23-59)	
Audio disc does not load	Symptom Troubleshooting (see page 23-61)	Damaged disc
Audio disc does not eject	Symptom Troubleshooting (see page 23-61)	• Damaged disc • Disc with a label
Audio disc changer does not load all six discs	Symptom Troubleshooting (see page 23-62)	Tire pressure (over-inflated), disc smudged, dirty, or scratched
Audio disc changer does not move between discs	Symptom Troubleshooting (see page 23-62)	Foreign objects such coins or paper labels inserted into the CD changer/ player
Audio disc does not play	Symptom Troubleshooting (see page 23-63)	
Audio disc skips	Symptom Troubleshooting (see page 23-63)	Tire pressure (over-inflated), disc smudged, dirty, or scratched
Booming sound while driving with audio unit on or off	Symptom Troubleshooting (see page 23-64)	
USB device does not function	Symptom Troubleshooting (see page 23-73)	
There is no sound from the left speaker when the USB device is connected	Symptom Troubleshooting (see page 23-79)	
There is no sound from the right speaker when the USB device is connected	Symptom Troubleshooting (see page 23-81)	

(cont'd)

Symptom Troubleshooting Index (cont'd)

Symptom	Diagnostic procedure	Also check for
Error code: XM NO SIGNAL is displayed	Symptom Troubleshooting (see page 23-83)	
Error code: XM ANTENNA is displayed	Symptom Troubleshooting (see page 23-87)	
XM radio display is blank and no station information is displayed (with AcuraLink)	Symptom Troubleshooting (see page 23-88)	
XM radio display is blank and no station information is displayed (without AcuraLink)	Symptom Troubleshooting (see page 23-92)	
XM radio preset memory is lost (with AcuraLink)	Symptom Troubleshooting (see page 23-95)	
XM radio preset memory is lost (without AcuraLink)	Symptom Troubleshooting (see page 23-96)	
Poor or no sound with XM radio (Audio unit does display XM channels)	Symptom Troubleshooting (see page 23-98)	
No sound when Bluetooth audio is used	HFL Symptom Troubleshooting (see page 23-325)	• Bluetooth phone • GA-NET line open/short • HandsFreeLink control unit • Audio unit-navigation unit
Bluetooth audio does not work	HFL Symptom Troubleshooting (see page 23-330)	• Bluetooth phone • GA-NET line open/short • HandsFreeLink control unit
Bluetooth cell phone cannot be paired	HFL Symptom Troubleshooting (see page 23-332)	• Bluetooth phone • HandsFreeLink control unit • Audio unit-navigation unit
The communication with cell phone is interrupted or changes	HFL Symptom Troubleshooting (see page 23-333)	• Electric wave interference • HandsFreeLink control unit • Audio unit • Bluetooth phone • Harness/connector
Pairing instructions are not displayed on the screen	HFL Symptom Troubleshooting (see page 23-335)	• Navigation display unit • Bluetooth phone • HandsFreeLink control unit • The Bluetooth phone may not be compatible (Some mobile phones do not support a part of the guide.)
Bluetooth cell phone audio function SKIP and PAUSE/RESUME do not work	HFL Symptom Troubleshooting (see page 23-336)	• Bluetooth phone (Some Bluetooth phones do not support the function.) (For further information, please contact the cell phone manufacturer.)

System Description

Active Noise Cancellation (ANC)/Active Sound Control (ASC)

Both the active noise cancellation and active sound control are built into the active sound control unit. Both systems help eliminate unwanted sound from entering the passenger compartment. There are two microphones mounted in the headliner, one just behind the front overhead console and the other just ahead of the overhead rear light module. The microphones listen for frequencies entering the passenger compartment and send a signal to the active noise cancellation unit. The active noise cancellation unit then creates a sound wave that sent out through the speakers to eliminate the unwanted sound.

Active Noise Cancellation (ANC) System

The active noise cancellation system works to cancel engine booming sound up to 2,000 rpm. The audio unit receives the engine speed pulse (NEP) from the PCM and outputs a sine wave through the audio speakers to cancel the low frequency sound from the engine. The active noise cancellation also uses the two microphones to detect and monitor low frequency sound noise in the passenger compartment. The microphones feed information back to the audio unit which adjusts the speaker output to reduce the noise. The active noise cancellation also receives an input from the door open/close (INTR LT) signal from the MICU so that when a door is opened, the active noise cancellation system temporarily stops working.

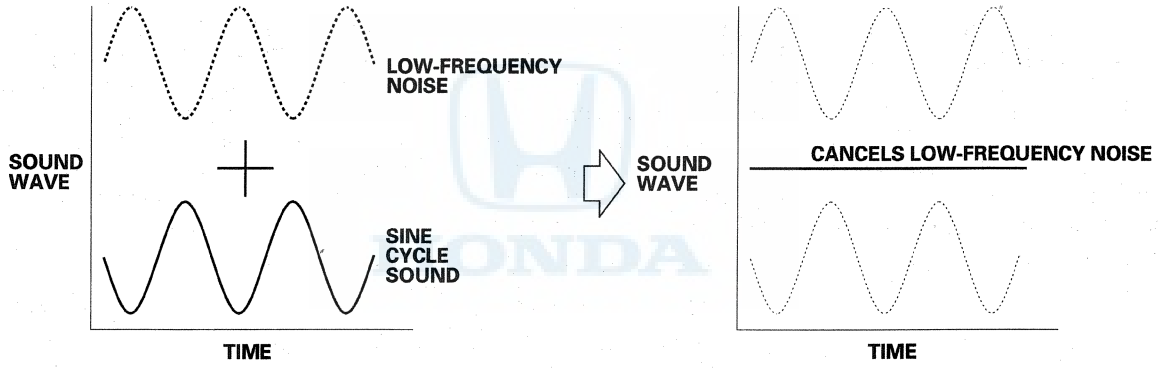

Active Sound Control (ASC) System

The active sound control is the next generation of eliminating unwanted sound in the passenger compartment. The active sound control has a much broader range than the active noise cancellation system. In addition to the microphones in the headliner, the active sound control also receives input from the engine speed pulse (NEP).

(cont'd)

System Description (cont'd)

Overview

The audio unit acts as the processor for all audio functions. You can select the audio functions from the front panel, the audio remote (on steering wheel), or by using the navigation voice control system. The audio display provides the current front and rear audio status. For vehicles with the navigation option, additional audio information is available by touching the audio button. (See the owner's manual for more details.)

Each audio component passes its audio signal to the audio unit. In addition, it communicates with the audio unit via the GA-Net bus. Any open connection in this circuit will cause audio and navigation functions to appear inoperative.

With the premium sound system, an audio amplifier unit powers the speakers, otherwise the speakers are powered directly by the audio unit.

The 6CD changer output can be directed to the audio unit.

The XM radio plays through the audio unit.

A security signal is daisy-chained between the audio and navigation components and integrated into the vehicle's alarm system.

The optional navigation system provides voice control for the front/rear audio, the XM, and the CD player. Voice control commands are communicated through the GA-Net (audio unit). When using the TALK/BACK or route guidance (RG), only the center speaker is muted and the front speakers give the navigation instructions. When using the HFL/AcuraLink, the center speaker, the rear speakers, and the subwoofer are muted and the front speakers give the telephone sound. When using the HFL/AcuraLink and the RG (Route Guidance) or voice response, the center speaker, the rear speakers, and the subwoofer are muted and the front speakers give the telephone sound and the navigation instructions. Muting commands are passed on the GA-Net bus. For more information, see the navigation section. The outline of the audio interruption function is shown in the following table.

Contents	Audio output					
	Center CH	Left front CH	Right front CH	Right rear CH	Left rear CH	Subwoofer CH
Voice Response	MUTE	Navigation sound	Navigation sound	Audio	Audio	Audio
Route Guidance	MUTE	Navigation sound	Navigation sound	Audio	Audio	Audio
HFL/AcuraLink	MUTE	Telephone sound	Telephone sound	MUTE	MUTE	MUTE
HFL/AcuraLink and RG or TALK/BACK	MUTE	Telephone sound and navigation sound	Telephone sound and navigation sound	MUTE	MUTE	MUTE

Bluetooth Audio

Bluetooth audio allows music phones to play music via a car audio system using Bluetooth technology.
You can control the phone's music player remotely using the wireless connection.
Bluetooth phones must be paired to the vehicle to use the Bluetooth audio function.

- You can play music stored in your cell phone using the wireless connection*1
- You can choose next song, previous song and resume/pause via wireless*2

* 1: The phone must support AVRC1.0, A2DP1.0 for bluetooth technology.
* 2: Not all phones support the Bluetooth audio function.

Supported Devices

- Bluetooth music phones that support AVRC1.0/A2DP1.0.
- Bluetooth adapters for portable music devices including iPod are not supported.

NOTE:
- Availability of the functions depends on the connected device.
- The latest support information is updated through the website www.acura.com/handsfreelink.

Pairing a Cell Phone

To pair a cell phone, refer to paring a cell phone in the HandsFreeLink system (see page 23-298). Once a cell phone is paired, the process does not have to be repeated for the phone.

(cont'd)

System Description (cont'd)

How to play the Bluetooth Audio

Procedure

1. Push the DISP/AUX button to select the Bluetooth Audio source.

   NOTE:
   - If you push the DISC/AUX button when no cell phone is connected, NO CONNECT is displayed.
   - If you see NO CONNECT when you are using cell phone music function, check that the device is properly paired, the cell phone may not be compatible. See www.acura.com/hansfreelink for more information.
   - Music titles and artist names are not displayed.

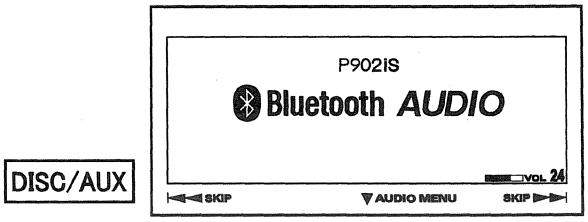

2. Start playing the music in the paired cell phone.

   NOTE: Depending on the cell phone, the music may start automatically, or the user may need to select headset as an audio output.

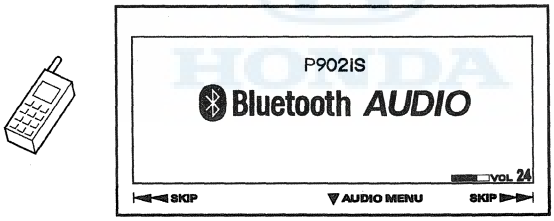

3. A user can select the next song or the previous song using the SKIP button.



4. A user can select pause and resume by selecting [RESUME/PAUSE] in the AUDIO MENU, using the interface dial.

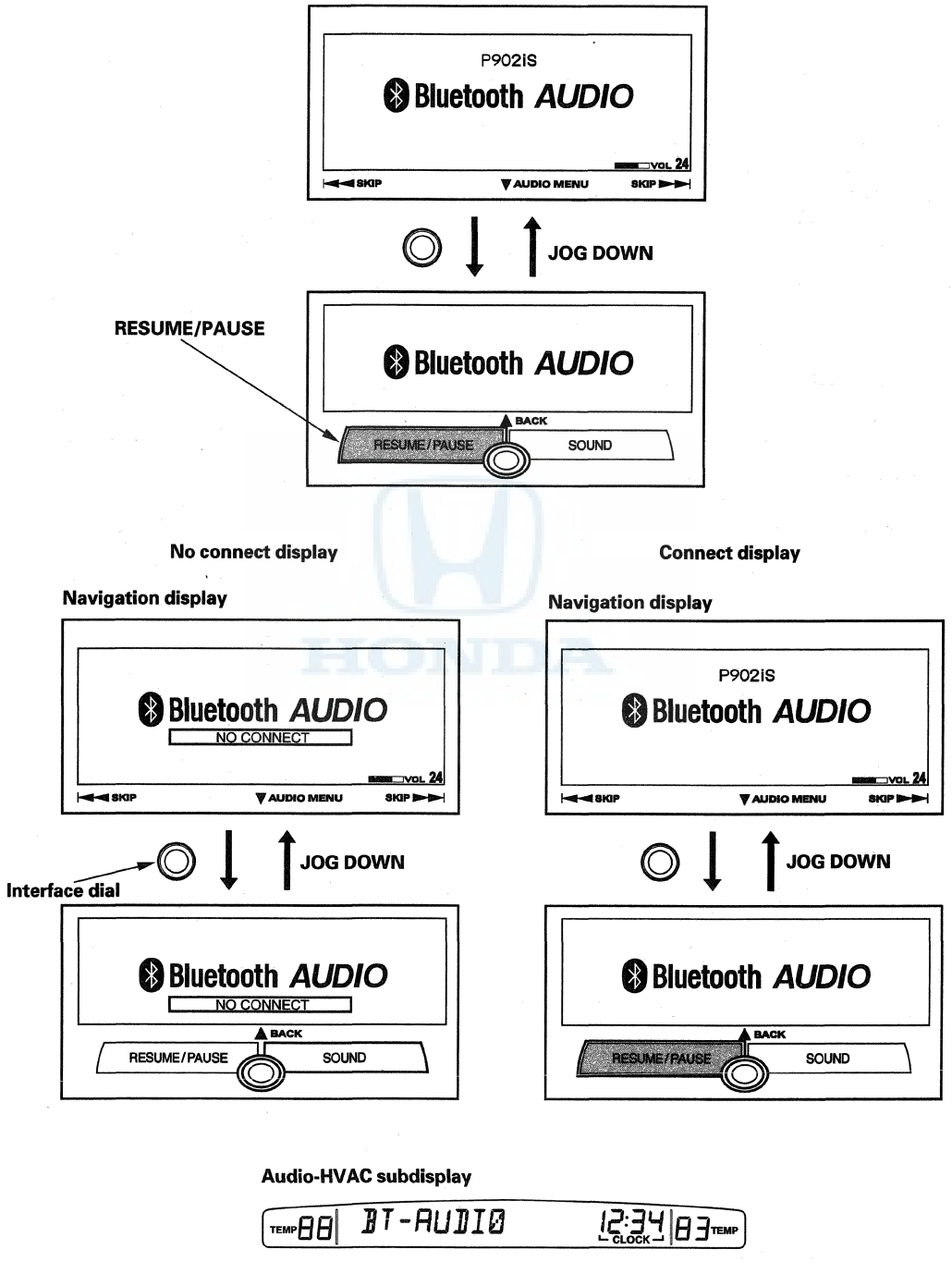

(cont'd)

System Description (cont'd)

System Diagram

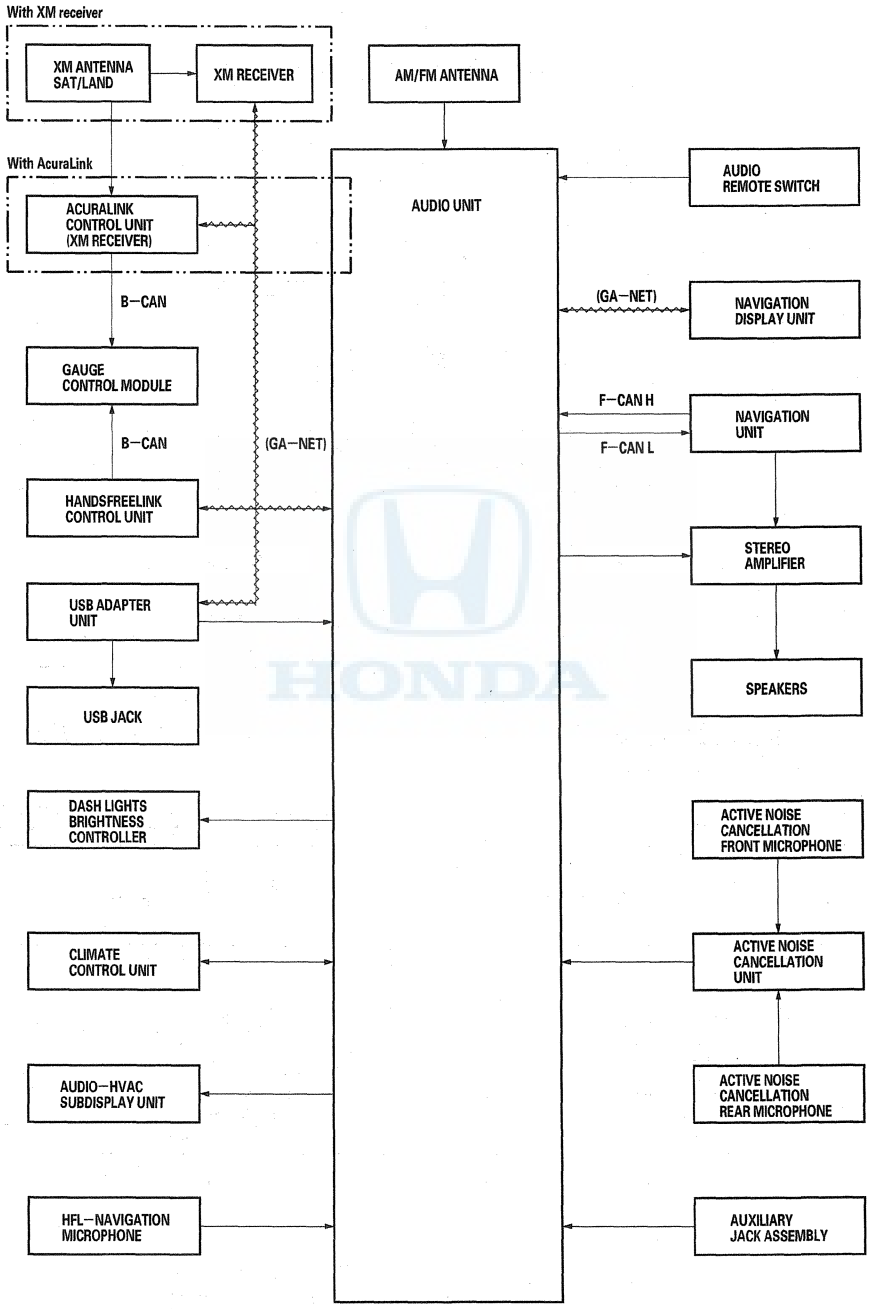

NOTE: All items may not apply to this vehicle. See the owner's manual for more information.

Audio Glossary

Item	Definition
Active noise cancellation	The active noise cancellation system cancels some of the vehicle noise. This occurs in the 1,500—2,400 rpm range. Microphones detect the low frequency sound, and the system outputs a canceling sound from the audio speaker.
Active sound control	The active sound control is the next generation of sound cancellation technology that is built into the same unit as the active noise cancellation. The active sound control cancels noise in a broader rpm range than the active noise cancellation unit.
AM (Amplitude Modulation)	The type of transmission used in the standard radio broadcast band from 530 to 1710 kHz.
Amplifier	A device that increases the level of a signal by increasing the current or voltage.
Antenna	A device used to send or receive electromagnetic waves through the air.
ATA (PC Card)	A type of card that has been tested for use in playing WMA, and MP3 music files in the PC Card slot. Sizes of up to 1 GB have been tested.
Audio remote switch	The switches on the steering wheel that control the audio system.
Auxiliary jack	Allows the client to use a portable audio device to input audio recordings.
Balance	A control that changes the relative volume of the left and right channels.
Band	A range of frequencies between two definite limits. Bands are assigned by the Federal Communications Commission for specific uses.
Bass	An adjustment for the low frequency sounds of around 160 Hz and below.
Bluetooth Audio	Allows the client to play audio recordings stored on their cell phone through the audio system.
Byte	A unit of storage for computer files and memory. A CD holds approximately 700 million bytes.
Cassette	Audio or video magnetic tape container having two reels. Clients can insert it for play back.
Compact flash	A standard for small-size (3 x 4 cm), memory cards used in mobile computers, PDAs, digital cameras. Compact flash memory cards are available in size of 32 MB up to 4 GB or more and can be played in the audio PC slot. Sizes above 1 GB have not been tested.
CD (Compact Disc)	A 4.5-inch plastic disc containing digital audio recording that is played optically on a laser equipped player. Never use discs with a paper label. In a hot vehicle, labels can curl up and jam the unit.
CD (audio disc) changer	CD player that can store and play more than one CD. Two types are available. Some units accept CDs fed into the changer one at a time, and others accept a magazine (with CDs stacked in a container).
CD player	A component designed to play compact disc recordings using a laser optical pickup. The signal from a CD player usually requires amplification.
CSF (Cold Start Fix) screens	These screens are displayed if the system requires a GPS initialization. The vehicle should be moved outside into an open area away from buildings/power lines.
Decibels (db)	A method of measuring sound or radio signal strength received by the audio unit antenna.
Distortion	Inexact reproduction of an audio signal caused by playing music at levels the audio system cannot handle. You will typically hear this as static, pops, or crackles.
Dolby (noise reduction)	A processing system developed by Dolby Laboratories that reduces the background noise on recording media. The result is a cleaner playback from the audio system.
DUET	A serial data communication line used for sub display.
DVD (Digital Versatile Disc)	A 4.5-inch CD-like format used for storing movies with digital audio and video features. The DVD-A format is a DVD format designed for DVD audio systems. Some vehicles can play DVD and DVD-A formats.

(cont'd)

System Description (cont'd)

Audio Glossary

Item	Definition
Equalizer	A device that changes the relative volume of individual frequency bands to suit personal tastes of the listener.
Fader	The control that adjusts the relative volume levels of front and rear speakers in a four-speaker system.
Format	To prepare a PC Card to receive files this function is done on a PC. Always choose either FAT or FAT32, as the NTFS format is not accepted by the system. Pick the default sectors for the format method selected.
FM (Frequency Modulation)	The form of modulation used for radio and television sound transmission in most of the world. Less prone to interference than AM. The FM broadcast band in North America covers roughly 87.7 to 107.9 MHz.
GA-Net	The GA-Net allows the audio unit to communicate with all the audio and navigation components in a vehicle. If there is an open in the GA-Net or components, the entire audio and navigation system may appear inoperative.
GB (Gigabyte)	A unit of memory or disc storage equal to billion bytes (1000 million bytes).
HDD	Abbreviation for hard disc drive. They are sensitive to heat and it is not recommended that they be used in the PC card slot for playing audio files.
Hertz (Hz)	The unit of frequency equal to one cycle per second (cps). One kilohertz (kHz) equals 1,000 cps; one megahertz (MHz) equals 1 million cps.
Integrated amplifier	A component that combines a pre amp and a power amp into a single unit. A receiver combines an integrated amp and a tuner into a single unit.
Jewel case	The hard plastic case that contains a compact disc or DVD. Always use a jewel case to prevent scratches on the underside of a CD or DVD.
LCD (Liquid Crystal Display)	A type of digital display that changes reflectance or transmittance when an electrical field is applied to it.
Memory	Circuitry or devices that hold information in electrical or magnetic form, such as the AM/FM radio presets.
MB (Megabyte)	One million bytes. Written as 1 MB. Megabytes are used as a measure of digital storage space. For example, a CD can hold 650 MB.
Mic	An abbreviation for microphone. For vehicles with navigation, the microphone accepts navigation voice commands to control audio and navigation functions.
MP3 music files	MP3 is an audio coding format. MP3 is a popular audio compression format on the Internet and computers. CDs and PC Cards with these files can be played on some vehicle's audio system.
Mute	When the navigation gives guidance, the front speakers are muted (no music). When you use the voice control system, all of the speakers are muted.
Noise	Unwanted random sounds like buzzing, hiss, pops, static, whine, etc.
PC card	The slot used for playing MP3 and WMA music files. The PC Card is usually a combination of a small flash card in a PCMCIA adaptor that slides into the slot. The ATA, SD, and compact flash types of cards have been tested up to 1 GB.
PCMCIA	A computer standard for the slot that the PC card slides into. Another term for the PC card slot.
Processor	The part of an audio device that performs tasks/calculations. In the audio unit, the processor handles muting to allow the navi to speak its voice commands, and the decoding/playback of the sound files etc.
Radio	A head unit that combines a tuner, a preamplifier, and often a power-amplifier.
Route guidance (RG)	Spoken voice used for turn-by-turn navigation from the audio speakers.

Audio Glossary

Item	Definition
Stereo	A recording of at least two channels where you can hear sound or music from the left or right side.
SD (Secure Digital) card	This compact type of memory card allows for fast data transfer and has built-in security functions. SD cards have a small write-protection switch on the side.
Shield	A metallic foil or braided wire layer surrounding conductors which are designed to prevent electrostatic or electromagnetic interference (noise) from external sources such as buzzing, or popping sounds heard on the speakers.
Speaker (Loudspeaker)	A device that converts electrical energy into acoustical energy (sound).
Speed-sensitive volume compensation (SVC)	The SVC increases the audio volume to compensate for increased interior noise when the vehicle is driven at freeway speeds.
Subwoofer	A loudspeaker made to reproduce the lowest audio frequencies, about 25 Hz to 125 Hz.
Track	A sound recording on a CD, tape, or PC Card.
Treble	An adjustment to control the volume of the high frequency sounds.
Tuner	A component (or part of a component) that receives radio signals and selects one broadcast from many.
Tweeter	A speaker designed to reproduce the higher frequencies (treble) only.
USB jack	Allows the client to play data such as input audio recording from portable audio devices (such as i-pod) or data from USB flash memory.
Voice coil	A coil of wire wrapped around a tube and then attached to the speaker cone or diaphragm. When an audio signal is applied, the coil becomes an electromagnet and interacts with the permanent magnet causing the come or diaphragm to vibrate. We interpret these vibrations as sound.
Volume control	Allows you to control the loudness of the music.
WMA music file	Windows Media Audio File. This is an accepted format for music files to be played on either a CD-R, a CD-RW or a PC Card.
Woofer	A speaker that is designed to reproduce low (bass) frequencies only.
XM radio	Satellite based radio transmission, which also uses a ground based repeater network to ensure seamless reception. The channels originate from XM's broadcast center, in Washington, DC, and uplink to two satellites. These satellites transmit the signal across the entire continental United States.
XM receiver	The external component that receives and processes the XM signals from the XM satellites, and terrestrial (land) stations. The audio unit communicates to the XM receiver over the GA-Net bus.

(cont'd)

System Description (cont'd)

Audio Unit Connector for Inputs and Outputs

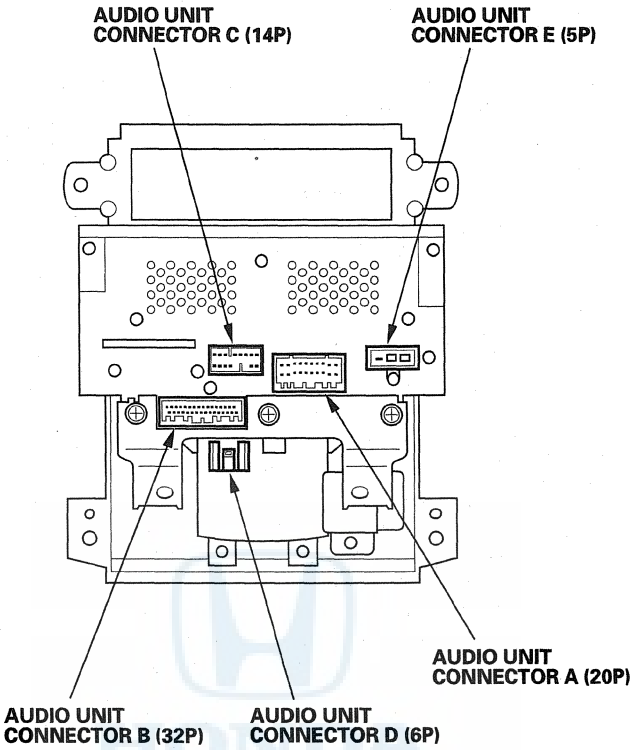

AUDIO UNIT CONNECTOR A (20P)

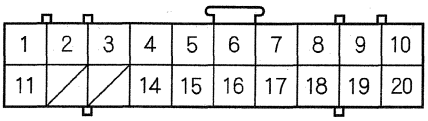

Wire side of female terminals

Cavity	Wire Color	Terminal Name	Connects to
A1	WHT	RADIO SW +B	Stereo amplifier
A2	PUR	ACC	No. 32 (10 A) fuse in the driver's under-dash fuse/relay box
A3	ORN	REMOTE SW	Audio remote switch
A4	BRN	NAVI SCTY	Navigation display unit
A5	BLU	RR R+	Stereo amplifier
A6	PUR	RR L+	Stereo amplifier
A7	GRN	FR R+	Stereo amplifier
A8	PNK	FR L+	Stereo amplifier
A9	LT BLU	ILL+	No. 7 (7.5 A) fuse in the passenger's under-dash fuse/relay box
A10	WHT	+B	No. 5 (7.5 A) fuse in the driver's under-dash fuse/relay box
A11	BRN	REMOTE SW GND	Audio remote switch
A14	GRY*	PRE AMP SHILD	Shield for terminals No. 5, No. 6, No. 7, No. 8, No. 15, No. 16, No. 17, and No. 18
A15	BRN	RR R−	Stereo amplifier
A16	LT GRN	RR L−	Stereo amplifier
A17	LT BLU	FR R−	Stereo amplifier
A18	RED	FR L−	Stereo amplifier
A19	ORN	ILL−	Dash lights brightness control
A20	BLK	GND	Body ground to G504

*: The shielded wires have a heat-shrink tube insulating the outside of the wire. The color of the insulating tube, typically black or dark gray, may not match the color of the wire listed on the schematic.

(cont'd)

System Description (cont'd)

AUDIO UNIT CONNECTOR B (32P)

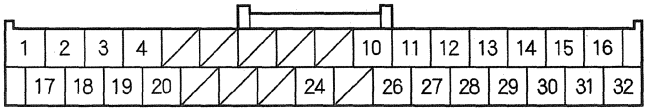

Wire side of female terminals

Cavity	Wire Color	Terminal Name	Connects to
B1	BRN	FR CTR+	Stereo amplifier
B2	PNK	SUB+	Stereo amplifier
B3	GRY*	BOSE BUS SHILD	Shield for terminals No. 4 and No. 20
B4	GRN	BOSE BUS+	Stereo amplifier
B10	RED	CLK-AC	Climate control unit
B11	ORN	IMS 1	Smart ECU
B12	PNK	ACC	Audio-HVAC subdisplay unit
B13	GRN	BLANK	Audio-HVAC subdisplay unit
B14	YEL	CLOCK	Audio-HVAC subdisplay unit
B15	RED	LOAD	Audio-HVAC subdisplay unit
B16	BLU	LCD BL+	Audio-HVAC subdisplay unit
B17	LT GRN	FR CTR−	Stereo amplifier
B18	LT BLU	SUB−	Stereo amplifier
B19	GRY*	AMP SHILD	Shield for terminals No. 1, No. 2, No. 17, No. 18
B20	RED	BOSE BUS−	Stereo amplifier
B24	LT GRN	HFL MUTE	HandsFreeLink control unit, HFL/navigation microphone
B26	YEL	SO-AC	Climate control unit
B27	PNK	IMS 2	Smart ECU
B28	PUR	5V GND	Audio-HVAC subdisplay unit
B29	GRY*	SHILD	Shield for terminals No. 13, No. 14, No. 15, No. 18, No. 30, and No. 31
B30	BLK	SEG TEST	Audio-HVAC subdisplay unit
B31	WHT	DATA	Audio-HVAC subdisplay unit
B32	ORN	LCD BL−	Audio-HVAC subdisplay unit

*: The shielded wires have a heat-shrink tube insulating the outside of the wire. The color of the insulating tube, typically black or dark gray, may not match the color of the wire listed on the schematic.

AUDIO UNIT CONNECTOR C (14P)

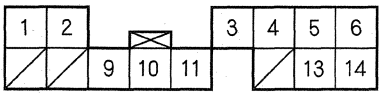

Wire side of female terminals

Cavity	Wire Color	Terminal Name	Connects to
C1	WHT	+B	USB adapter unit, XM receiver unit *2
C2	PUR	SYS ON	USB adapter unit, XM receiver unit *2
C3	GRY*3	GA-NET BUS SH	Shield for terminals No. 9 and No. 10
C4	GRY	AUDIO SH	Shield for terminal No. 5, No. 6, No. 13, and No. 14
C5	GRN	AUDIO R+	USB adapter unit, HandsFreeLink control unit, AcuraLink control unit (XM receiver) *1, MX receiver unit *2
C6	WHT	AUDIO L+	USB adapter unit, HandsFreeLink control unit, AcuraLink control unit (XM receiver) *1, XM receiver unit *2
C9	GRN	GA-NET BUS+	Navigation display unit
C10	RED	GA-NET BUS−	Navigation display unit
C11	BLK	GND	USB adapter unit, XM receiver unit *2
C13	BLK	AUDIO R−	USB adapter unit, HandsFreeLink control unit, AcuraLink control unit (XM receiver) *1, XM receiver unit *2
C14	RED	AUDIO L−	USB adapter unit, HandsFreeLink control unit, AcuraLink control unit (XM receiver) *1 XM receiver unit *2

* 1: With AcuraLink
* 2: With XM receiver
* 3: The shielded wires have a heat-shrink tube insulating the outside of the wire. The color of the insulating tube, typically black or dark gray, may not match the color of the wire listed on the schematic.

(cont'd)

System Description (cont'd)

AUDIO UNIT CONNECTOR D (6P)

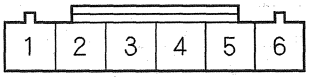

Wire side of female terminals

Cavity	Wire Color	Terminal Name	Connects to
D1	YEL	AUX DET	Auxiliary jack assembly
D2	BLK	AUX GND	Auxiliary jack assembly
D3	RED	AUX R— CH	Auxiliary jack assembly
D4	GRN	AUX SIG GND	Auxiliary jack assembly
D5	WHT	AUX L— CH	Auxiliary jack assembly
D6	GRY*	AUX SH GND	Shield for terminals No. 1, No. 2, No. 3, No. 4, and No. 5

*: The shielded wires have a heat-shrink tube insulating the outside of the wire. The color of the insulating tube, typically black or dark gray, may not match the color of the wire listed on the schematic.

AUDIO UNIT CONNECTOR E (5P)

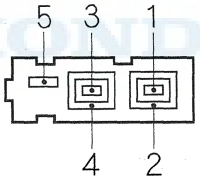

Terminal side of female terminals

Cavity	Wire Color	Terminal Name	Connects to
E1	———	RF IN	AM/FM subantenna amplifier
E2	———	RF SH	Shield for terminal No. 1
E3	———	RF IN	AM/FM main antenna amplifier
E4	———	RF SH (AM/FM)	Shield for terminal No. 3
E5	———	ANT	AM/FM antenna amplifier

Stereo Amplifier Connector for Inputs and Outputs

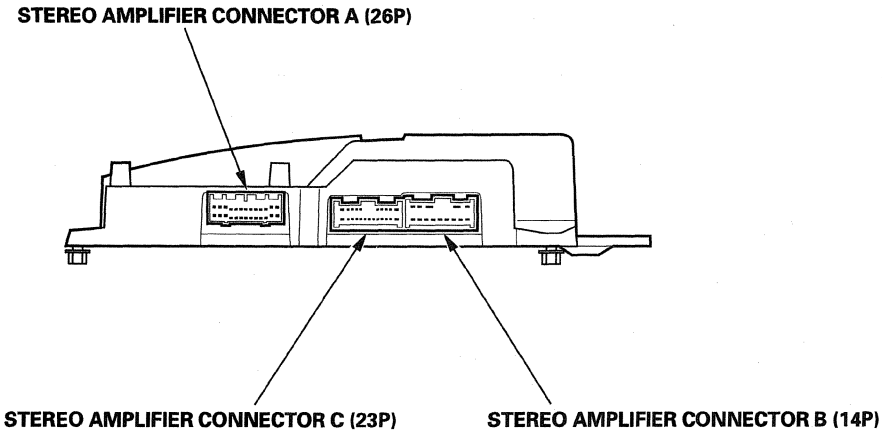

HONDA

(cont'd)

System Description (cont'd)

STEREO AMPLIFIER CONNECTOR A (26P)

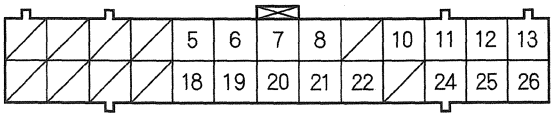

Wire side of female terminals

Cavity	Wire Color	Terminal Name	Connects to
A5	BLU	RR R+	Audio unit
A6	BRN	RR R−	Audio unit (RR R−)
A7	PNK	SUB+	Audio unit
A8	LT BLU	SUB−	Audio unit
A10	GRN	BOSE BUS+	Audio unit
A11	RED	BOSE BUS−	Audio unit
A12	GRN	FR R+	Audio unit
A13	LT BLU	FR R−	Audio unit
A18	WHT	DIAG	Active noise cancellation unit
A19	PUR	RR L+	Audio unit
A20	LT GRN	RR L−	Audio unit
A21	BRN	FR CTR+	Audio unit
A22	LT GRN	FR CTR−	Audio unit
A24	GRY	REMOTE ON	Active noise cancellation unit
A25	PNK	FR L+	Audio unit
A26	RED	FR L−	Audio unit

STEREO AMPLIFIER CONNECTOR B (14P)

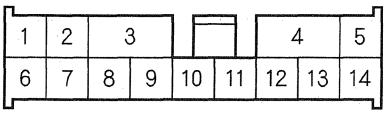

Wire side of female terminals

Cavity	Wire Color	Terminal Name	Connects to
B1	GRY	FR SP−	Front passenger's door speaker and right front door tweeter
B2	BRN	RL SP−	Left rear speaker
B3	BLK	GND	Body ground to G652
B4	WHT	+B	No. 3 (30 A) fuse in the passenger's under-dash fuse/relay box
B5	BRN	SUBW SP+	Subwoofer
B6	LT GRN	FR SP+	Front passenger's door speaker and right front door tweeter
B7	GRY	RL SP+	Left rear speaker
B8	BLU	RR SP+	Right rear speaker
B9	ORN	RR SP−	Right rear speaker
B10	PUR	RL TWD+	Left rear twiddler
B11	LT BLU	RL TWD−	Left rear twiddler
B12	GRY	RR TWD+	Right rear twiddler
B13	BLU	RR TWD−	Right rear twiddler
B14	GRN	SUBW SP−	Subwoofer

(cont'd)

System Description (cont'd)

STEREO AMPLIFIER CONNECTOR C (23P)

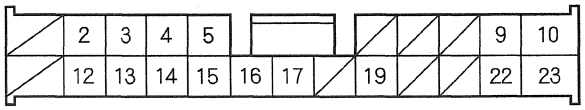

Wire side of female terminals

Cavity	Wire Color	Terminal Name	Connects to
C2	RED	RG-L+	Navigation unit
C3	GRN	RG-L GND	Navigation unit
C4	BLU	MIC R IN−	Active noise cancellation unit, Active noise cancellation rear microphone
C5	RED	MIC R IN+	Active noise cancellation unit, Active noise cancellation rear microphone
C9	PNK	CTR SP−	Front center speaker
C10	LT GRN	FL SP−	Driver's door speaker and left front door tweeter
C12	GRN	TELM SIG+	HandsFreeLink control unit
C13	RED	TELM SIG−	HandsFreeLink control unit
C14	PUR	F+	Active noise cancellation unit
C15	ORN	F−	Active noise cancellation unit
C16	PNK	R+	Active noise cancellation unit
C17	GRN	R−	Active noise cancellation unit
C19	WHT	RADIO SW +B	Audio unit
C22	BLU	CTR SP+	Front center speaker
C23	LT BLU	FL SP+	Driver's door speaker and left front door tweeter

XM Receiver Connector for Inputs and Outputs (With XM receiver)

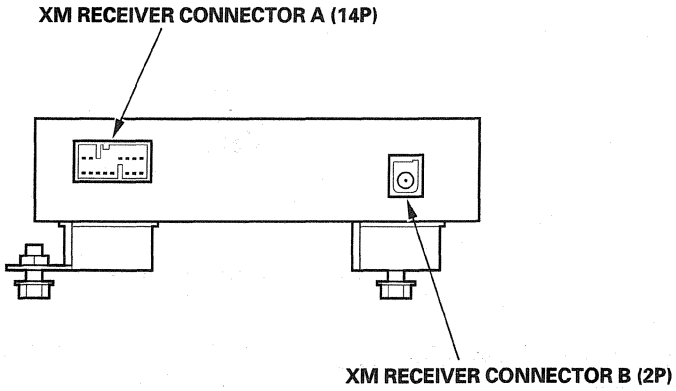

XM RECEIVER CONNECTOR A (14P)

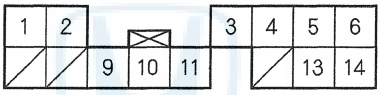

Wire side of female terminals

Cavity	Wire Color	Terminal Name	Connects to
A1	WHT	+B	Audio unit, USB adapter unit
A2	PUR	SYS ON	Audio unit, USB adapter unit
A3	GRY*	GA-NET BUS SH	Shield for terminals No. 9 and No. 10
A4	GRY*	AUDIO SH	Shield for terminals No. 5, No. 6, No. 13, and No. 14
A5	GRN	AUDIO R+	Audio unit, HandsFreeLink control unit, USB adapter unit
A6	WHT	AUDIO L+	Audio unit, HandsFreeLink control unit, USB adapter unit
A9	GRN	GA-NET BUS+	HandsFreeLink control unit, USB adapter unit, Navigation display unit, Navigation unit
A10	RED	GA-NET BUS−	HandsFreeLink control unit, USB adapter unit, Navigation display unit, Navigation unit
A11	BLK	GND	Audio unit, USB adapter unit
A13	BLK	AUDIO R−	Audio unit, HandsFreeLink control unit, USB adapter unit
A14	RED	AUDIO L−	Audio unit, HandsFreeLink control unit, USB adapter unit

*: The shielded wires have a heat-shrink tube insulating the outside of the wire. The color of the insulating tube, typically black or dark gray, may not match the color of the wire listed on the schematic.

(cont'd)

System Description (cont'd)

XM RECEIVER CONNECTOR B (2P)

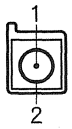

Terminal side of female terminals

Cavity	Wire Color	Terminal Name	Connects to
B1	———	INPUT	XM antenna
B2	———	GND	Shield for terminal No. 1

Active Noise Cancellation Unit Connector for Inputs and Outputs

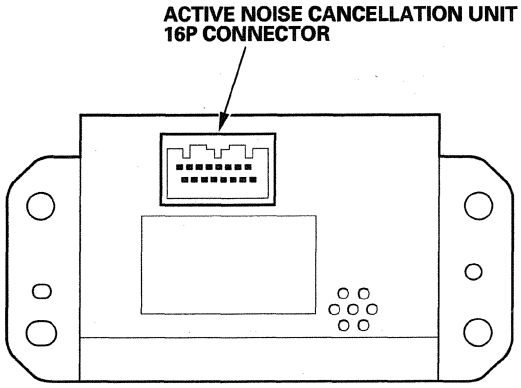

ACTIVE NOISE CANCELLATION UNIT 16P CONNECTOR

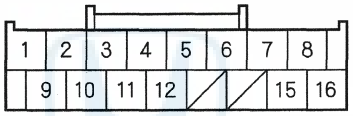

Wire side of female terminals

Cavity	Wire Color	Terminal Name	Connects to
1	PNK	R+	Stereo amplifier
2	PUR	F+	Stereo amplifier
3	LT GRN	MIC F IN+	Active noise cancellation front microphone
4	RED	MIC R IN+	Stereo amplifier, Active noise cancellation rear microphone
5	BLU	MIC R IN−	Stereo amplifier, Active noise cancellation rear microphone
6	GRY	REMOTE ON	Stereo amplifier
7	BLK	GND	Body ground to G652
8	WHT	+B	No. 5 (7.5 A) fuse in the driver's under-dash fuse/relay box
9	GRN	R−	Stereo amplifier
10	ORN	F−	Stereo amplifier
11	LT BLU	MIC F IN−	Active noise cancellation front microphone
12	WHT	DIAG	Stereo amplifier
15	GRN	NEP	PCM, Test tachometer connector
16	PNK	INTR LT−	Multiplex integrated control unit (MICU)

(cont'd)

System Description (cont'd)

Active Noise Cancellation Microphone Connector for Inputs and Outputs

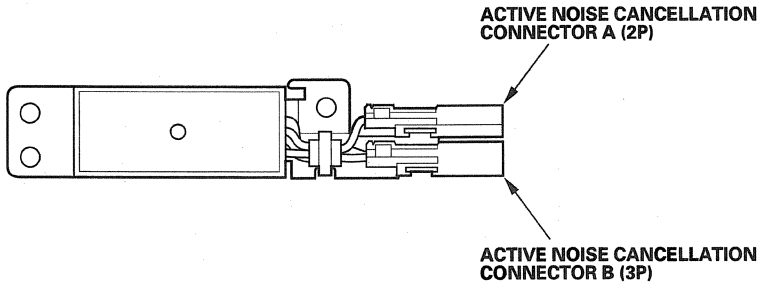

ACTIVE NOISE CANCELLATION FRONT or REAR MICROPHONE CONNECTOR A (2P)

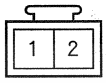

Terminal side of male terminals

(Front)

Cavity	Wire Color	Terminal Name	Connects to
A1	LT BLU	MIC F IN−	Active noise cancellation unit
A2	LT GRN	MIC F IN+	Active noise cancellation unit

(Rear)

Cavity	Wire Color	Terminal Name	Connects to
A1	BLU	MIC R IN−	Stereo amplifier, Active noise cancellation unit
A2	RED	MIC R IN+	Stereo amplifier, Active noise cancellation unit

ACTIVE NOISE CANCELLATION FRONT or REAR MICROPHONE CONNECTOR B (3P)

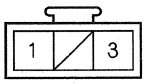

Terminal side of male terminals

Cavity	Wire Color	Terminal Name	Connects to
B1	BLK	GND	Body ground to G652
B3	PUR	ACC	No. 32 (10 A) fuse in the driver's under-dash fuse/relay box

Audio-HVAC Subdisplay Unit Connector for Inputs and Outputs

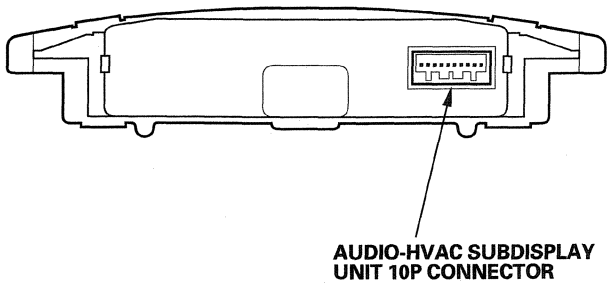

AUDIO-HVAC SUBDISPLAY UNIT 10P CONNECTOR

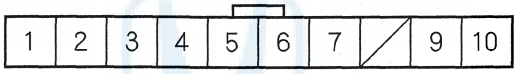

Wire side of female terminals

Cavity	Wire Color	Terminal Name	Connects to
1	PUR	5 V GND	Audio unit
2	PNK	ACC	Audio unit
3	BLK	SEG TEST	Audio unit
4	GRN	BLANK	Audio unit
5	YEL	CLOCK	Audio unit
6	WHT	DATA	Audio unit
7	RED	LOAD	Audio unit
9	ORN	LCD BL−	Audio unit
10	BLU	LCD BL+	Audio unit

(cont'd)

System Description (cont'd)

Auxiliary Jack Assembly Connector for Inputs and Outputs

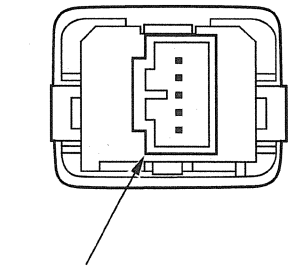

AUXILIARY JACK ASSEMBLY 5P CONNECTOR

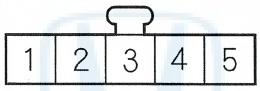

Wire side of female terminals

Cavity	Wire Color	Terminal Name	Connects to
1	YEL	AUX DET	Audio unit
2	BLK	AUX GND	Audio unit
3	GRN	AUX SIG GND	Audio unit
4	WHT	AUX L-CH	Audio unit
5	RED	AUX R-CH	Audio unit

USB Adapter Unit for Inputs and Outputs

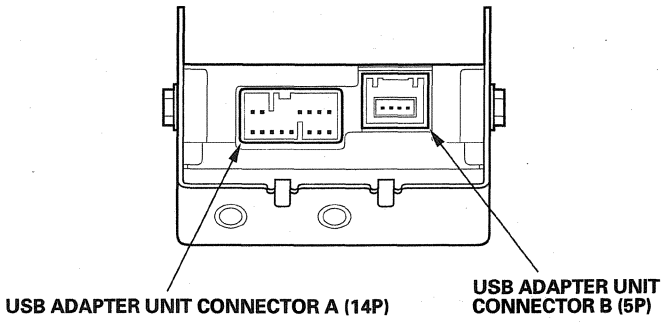

USB ADAPTER UNIT CONNECTOR A (14P)

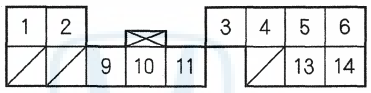

Wire side of female terminals

Cavity	Wire Color	Terminal Name	Connects to
A1	WHT	+B	Audio unit, XM receiver*1
A2	PUR	SYS ON	Audio unit, XM receiver*1
A3	GRY*3	GA-NET BUS SH	Shield for terminals No. 9 and No. 10
A4	GRY*3	AUDIO SH	Shield for terminals No. 5, No. 6, No. 13, and No. 14
A5	GRN	AUDIO R+	Audio unit, HandsFreeLink control unit, AcuraLink control unit (XM receiver)*1, XM receiver*2
A6	WHT	AUDIO L+	Audio unit, HandsFreeLink control unit, AcuraLink control unit (XM receiver)*1, XM receiver*2
A9	GRN	GA-NET BUS+	HandsFreeLink control unit, Navigation display unit, AcuraLink control unit (XM receiver)*1, XM receiver*2, Navigation unit
A10	RED	GA-NET BUS−	HandsFreeLink control unit, Navigation display unit, AcuraLink control unit (XM receiver)*1, XM receiver*2, Navigation unit
A11	BLK	GND	Audio unit, XM receiver*2
A13	BLK	AUDIO R−	Audio unit, HandsFreeLink control unit, AcuraLink control unit (XM receiver)*1, XM receiver*2
A14	RED	AUDIO L−	Audio unit, HandsFreeLink control unit, AcuraLink control unit (XM receiver)*1, XM receiver*2

* 1: With AcuraLink
* 2: With XM receiver
* 3: The shielded wires have a heat-shrink tube insulating the outside of the wire. The color of the insulating tube, typically black or dark gray, may not match the color of the wire shown on the circuit diagram.

(cont'd)

System Description (cont'd)

USB Adapter Unit Connector B (5P)

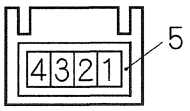

Terminal side of female terminals

Cavity	Wire Color	Terminal Name	Connects to
B1	———	USB VBUS	USB Jack
B2	———	USB DATA−	USB Jack
B3	———	USB DATA+	USB Jack
B4	———	USB GND	USB Jack
B5	———	USB SH	Shield for terminals No. 1, No. 2, No. 3, and No. 4

Circuit Diagram

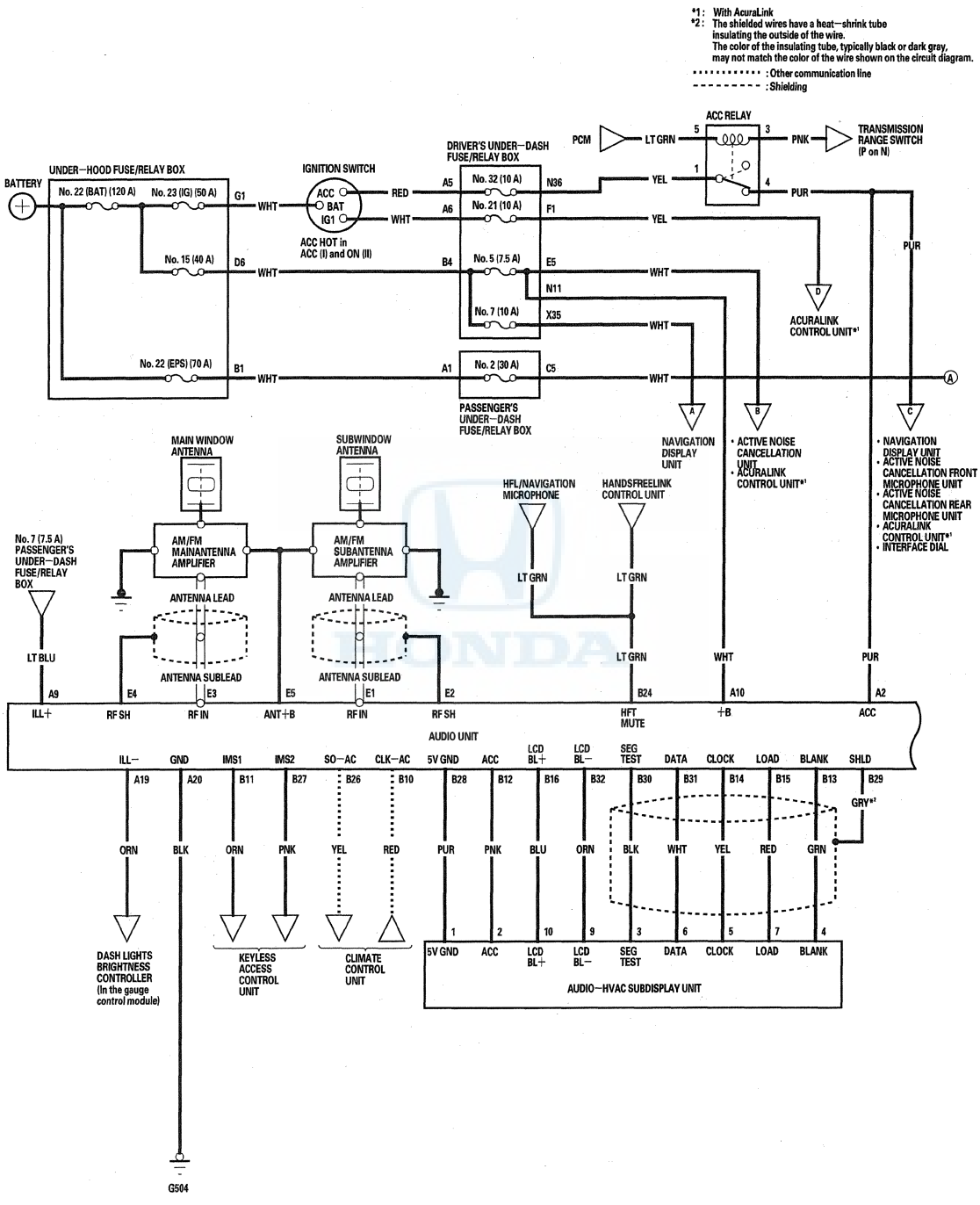

(cont'd)

Circuit Diagram (cont'd)

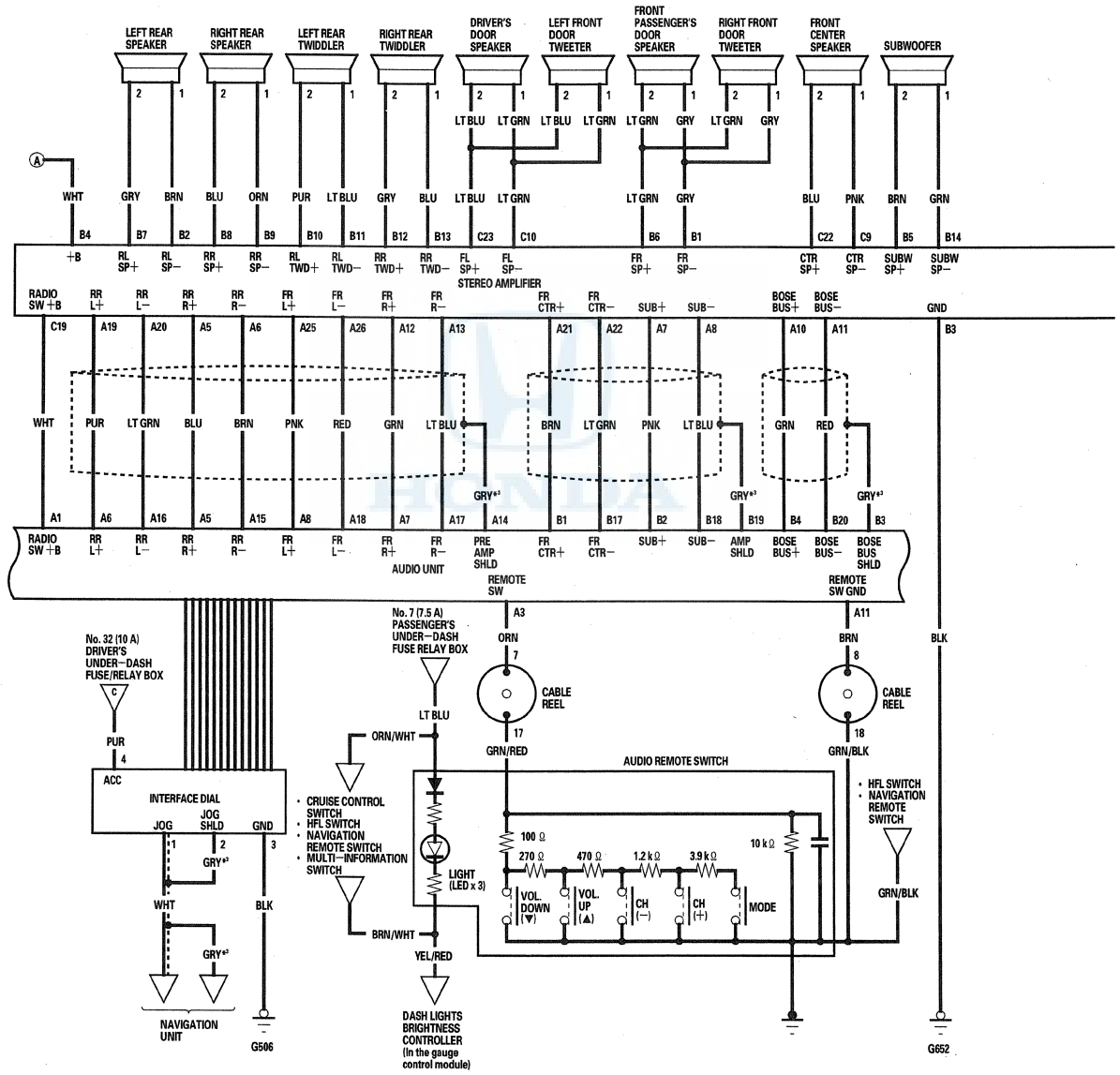

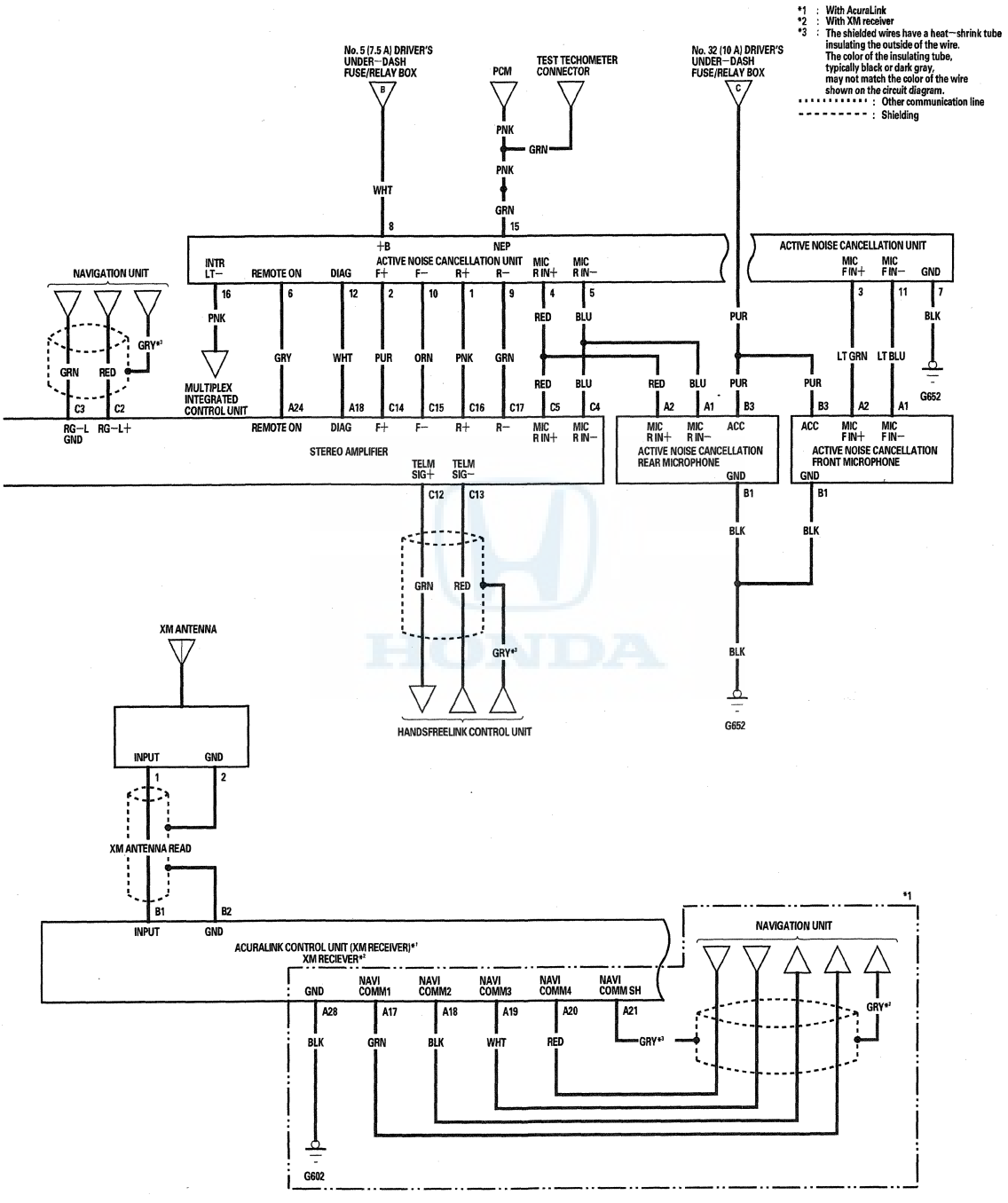
*1 : With AcuraLink
*2 : With XM receiver
*3 : The shielded wires have a heat-shrink tube insulating the outside of the wire. The color of the insulating tube, typically black or dark gray, may not match the color of the wire shown on the circuit diagram.
: Other communication line
: Shielding
No. 5 (7.5 A) DRIVER'S UNDER-DASH FUSE/RELAY BOX
PCM
TEST TECHOMETER CONNECTOR
No. 32 (10 A) DRIVER'S UNDER-DASH FUSE/RELAY BOX
ACTIVE NOISE CANCELLATION UNIT
NAVIGATION UNIT
MULTIPLEX INTEGRATED CONTROL UNIT
STEREO AMPLIFIER
ACTIVE NOISE CANCELLATION REAR MICROPHONE
ACTIVE NOISE CANCELLATION FRONT MICROPHONE
HANDSFREELINK CONTROL UNIT
XM ANTENNA
XM ANTENNA READ
ACURALINK CONTROL UNIT (XM RECEIVER)*1
XM RECIEVER*2
G652
G602

(cont'd)

Circuit Diagram (cont'd)

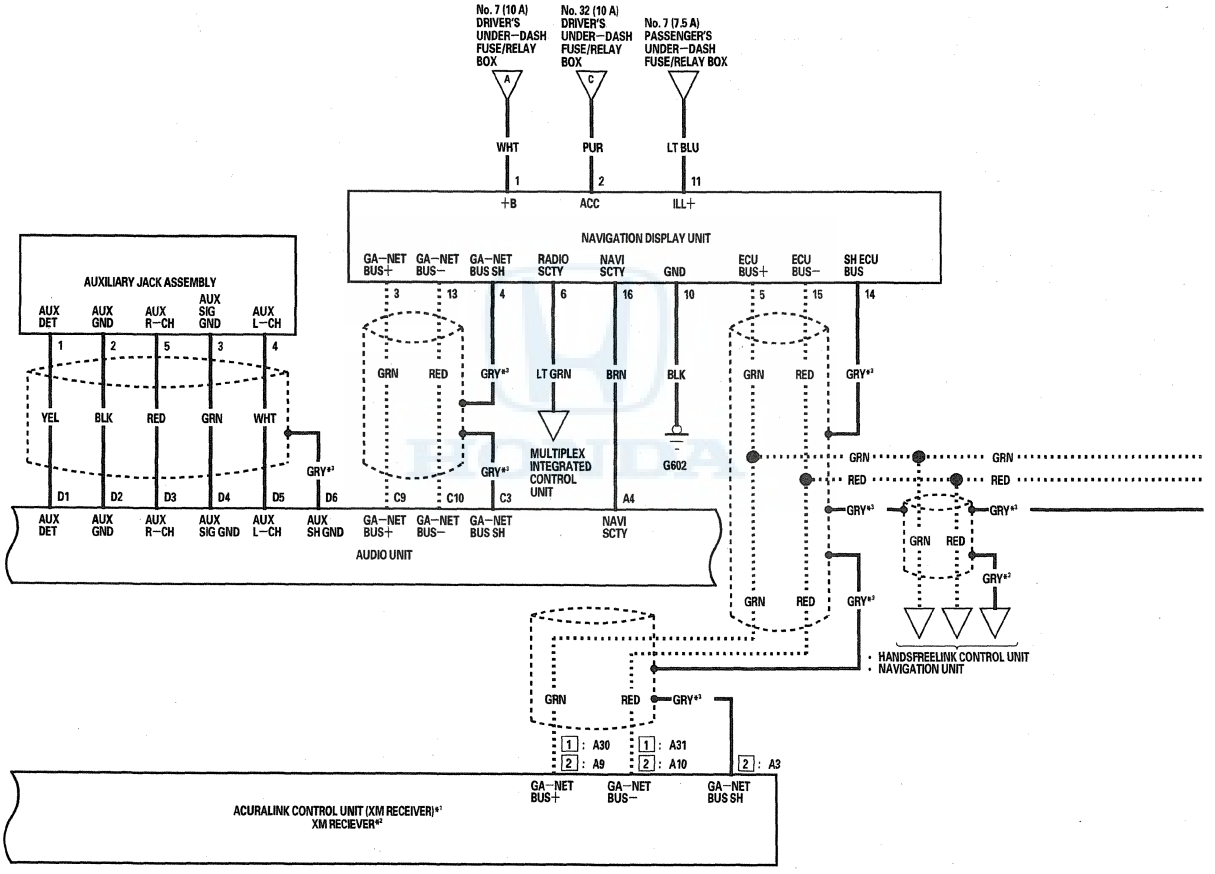

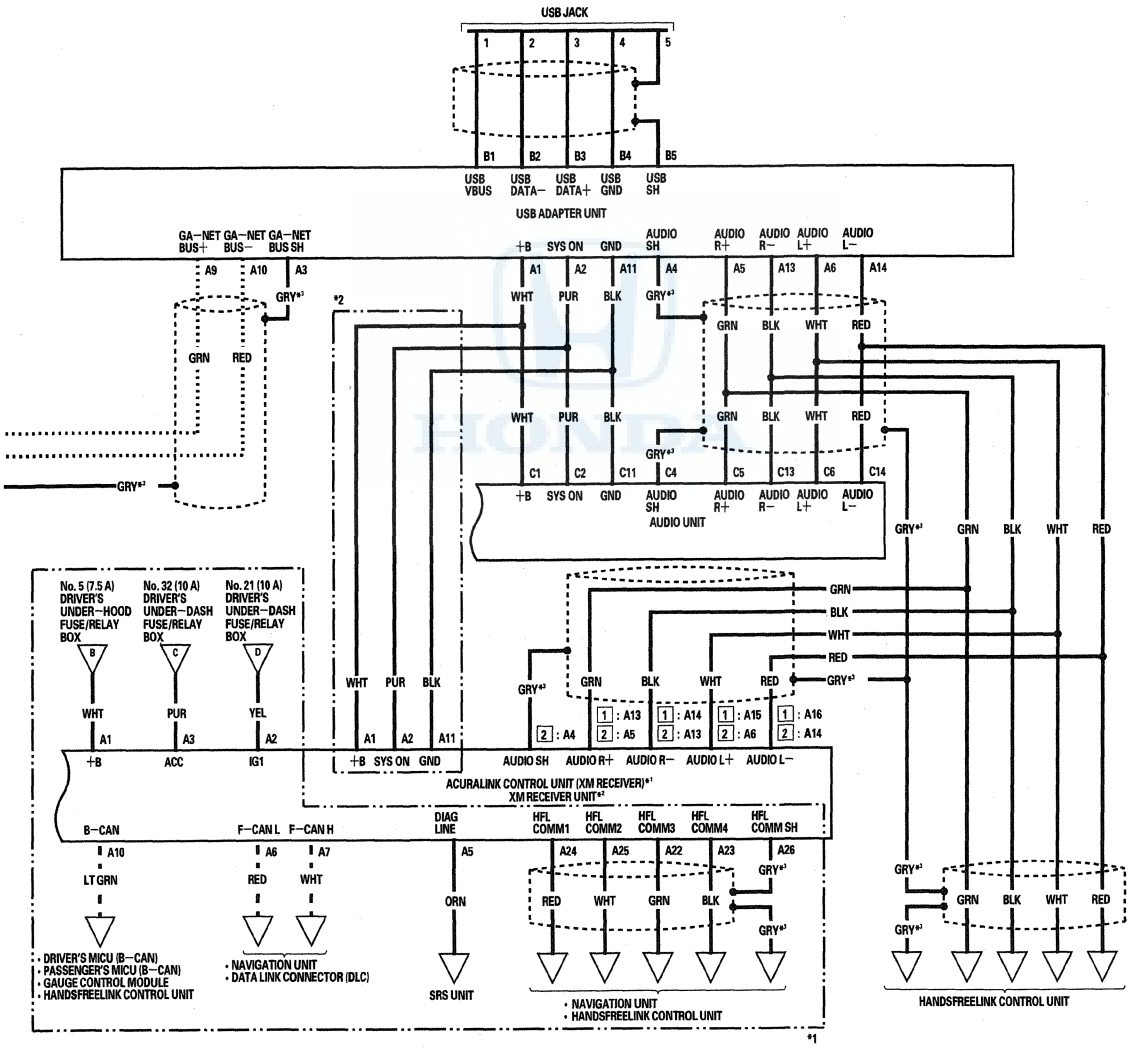
*1 : With AcuraLink
*2 : Without AcuraLink
*3 : The shielded wires have a heat—shrink tube insulating the outside of the wire. The color of the insulating tube, typically black or dark gray, may not match the color of the wire shown on the circuit diagram.
1 : With AcuraLink
2 : Without AcuraLink
: CAN line
: Other communication line
: Shielding
USB JACK
USB ADAPTER UNIT
AUDIO UNIT
ACURALINK CONTROL UNIT (XM RECEIVER)*1
XM RECEIVER UNIT*2
• DRIVER'S MICU (B—CAN)
• PASSENGER'S MICU (B—CAN)
• GAUGE CONTROL MODULE
• HANDSFREELINK CONTROL UNIT
• NAVIGATION UNIT
• DATA LINK CONNECTOR (DLC)
SRS UNIT
• NAVIGATION UNIT
• HANDSFREELINK CONTROL UNIT
HANDSFREELINK CONTROL UNIT
No. 5 (7.5 A) DRIVER'S UNDER—HOOD FUSE/RELAY BOX
No. 32 (10 A) DRIVER'S UNDER—DASH FUSE/RELAY BOX
No. 21 (10 A) DRIVER'S UNDER—DASH FUSE/RELAY BOX

Self-diagnostic Function

The audio system has a self-diagnostic function.

NOTE:
- Not all self-diagnostic functions appear on all models.
- They may be other self-diagnostic functions that are for factory use only.
- The self diagnostic function does not find every problem with the audio system. Check any official Honda service website for more information about the audio system.

How to Use the Audio System Self-diagnostic Function

1. Turn the ignition switch to ON (II).
2. Enter the anti-theft code.
3. Push, and hold the No. 1 and No. 6 buttons. While holding the buttons, push the PWR knob to on. Release the buttons, and the self-diagnostic function begins.
4. The word DIAG appears on the subdisplay.

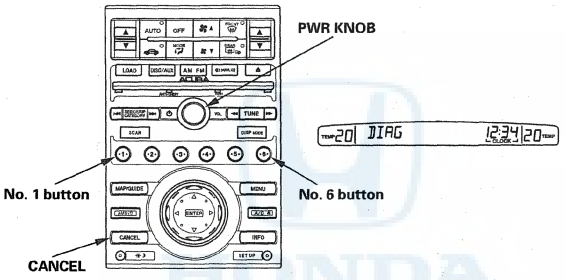

How to exit the self-diagnosis mode

Turn the audio power off or the ignition switch to LOCK (0).

How to Obtain the Audio Unit Serial Number

NOTE: This procedure can only when the power has been disconnected from the audio unit, and the audio unit displays CODE.

With the audio unit switched off, push and hold the preset buttons No. 1, No. 6, and the PWR knob.

The audio unit displays the letter U with the first four digits of the serial number (example U1234).
The display then changes and displays the letter L and the last four digits of the serial number (example L5678).
Use all eight digits as the serial number when using the interactive network iN to get the 4 digit anti-theft code.

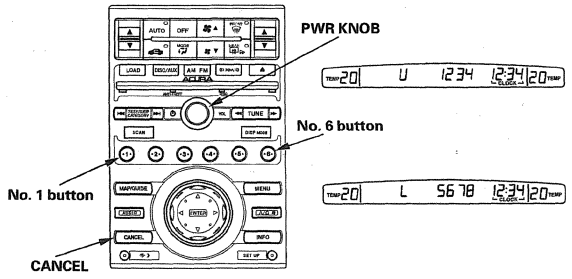

LCD lighting mode

When you press the No. 3 button, the entire LCD turns on to show if any LCDs are dead (off).

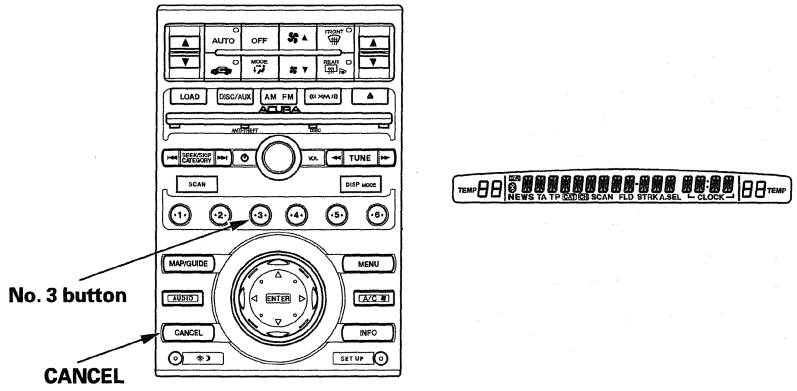

LCD lights-out mode

When you press the No. 4 button, the entire LCD turns off to show if any LCDs are stuck on.

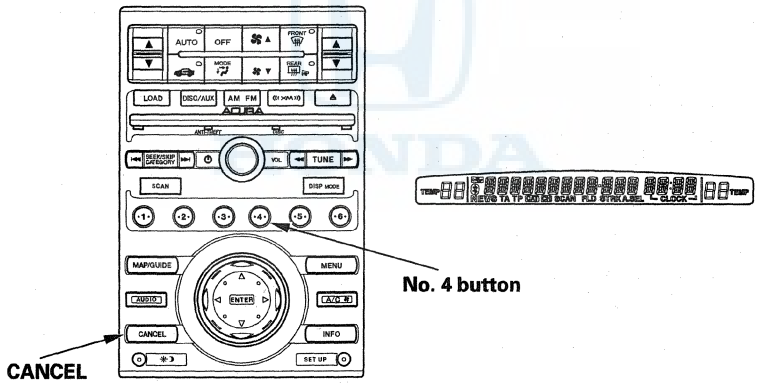

(cont'd)

Self-diagnostic Function (cont'd)

LCD back-up light lighting/lights-out mode

Press the No. 4 button to turn off the entire LCD, then press and hold the DISC/AUX button for 5 seconds. The LCD back-up lights should come on. When you press and hold the DISC/AUX button for 5 seconds again, and the LCD back-up lights should go off.

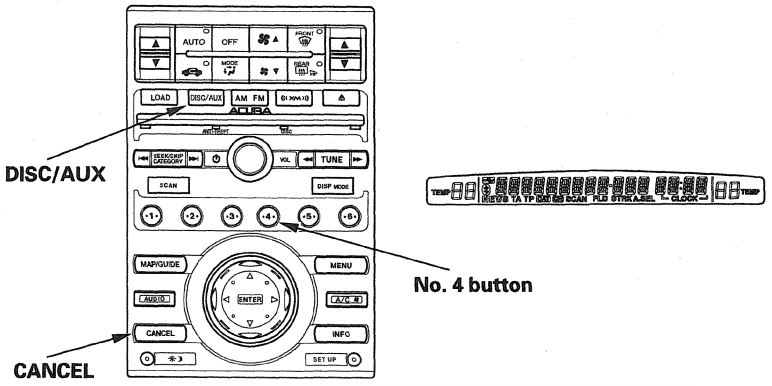

Climate control system communication check mode

When you press the No. 5 button, the self-diagnostic checks the climate control unit communication line.

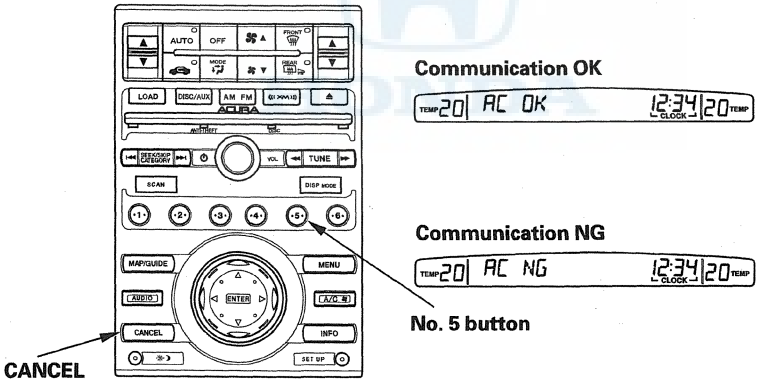

Audio amplifier communication check mode

When you press the No. 6 button, the self-diagnostic checks the audio amplifier communication line.

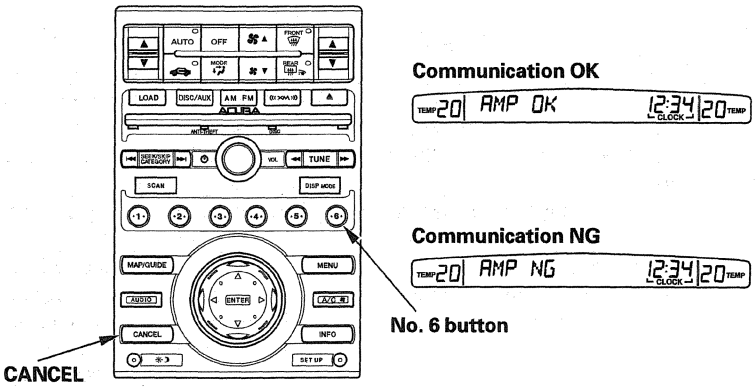

Active Noise Cancellation (ANC) system check mode

Active noise cancellation can be turned ON or OFF, and you can check the current status. The active noise cancellation switches ON and OFF with every push of the No. 1 button. If "——" appears on the display, use this check mode to check for loose wires or poor connections at the active noise cancellation control unit connector (16P).

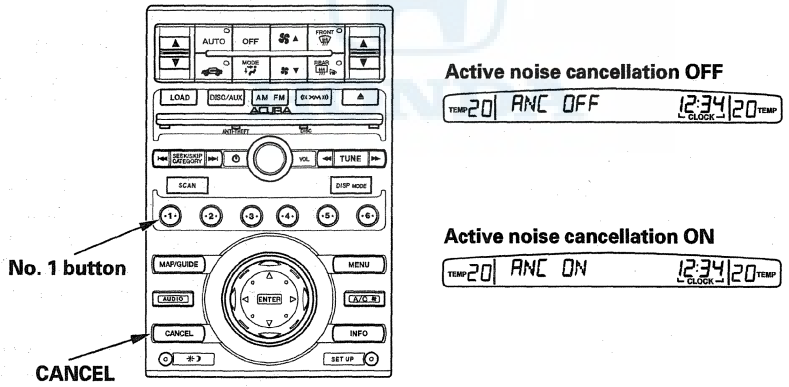

How to check the active noise cancellation system in this check mode

- With the engine stopped, and while in DIAG mode, turn the ANC ON to OFF by pressing the No. 1 button. A low-frequency hum (50 Hz) should sound for about a minute.
  - If the hum does not sound, check for an open in the wire between the active noise cancellation unit and the audio unit.
  - If the hum does not sound for a minute, check for an open in the wire between active noise cancellation unit and the microphone.
- Enter the DIAG mode with the engine running (900 rpm), apply the brake pedal and shift to D position, turn the ANC ON to ANC OFF by pressing the No. 1 button on the audio unit, then turn the ANC OFF to ANC ON. After about 3 seconds, the active noise cancellation system should activate. (NOTE: When any of the doors are opened, the function stops.)

Error Codes

The audio system can display error codes when a problem is detected with the CD changer, the audio disc, the XM radio, or the anti-theft code. This not a complete list of audio error codes. Refer to symptom troubleshooting, or go to any official Honda service website for more service information.

CD Error Codes

Error Code Displayed	Possible Cause	Solution
DISC	Cannot read disc.	Eject the disc and try another one.
DISC ERROR	There is a problem with the disc player. A common problem is disc labels coming off the disc while in the player.	Try to eject the disc and try another one. If there is still a problem, replace the audio unit (see page 23-106) or the navigation unit (see page 23-255).
DISC FORMAT	A disc was inserted that has a format that is not recognized.	Eject the disc, and try another one.
DISC-H	Disc player is hot. This can happen if the vehicle is parked out in the hot sun all day.	Park the vehicle in a cooler place for a while and try the disc player again. If the error code is still present, try another disc. If the error code is still present, replace the audio unit (see page 23-106) or the navigation unit (see page 23-255).

XM Error Codes

Error Code Displayed	Possible Cause	Solution
XM LOADING	XM radio is acquiring audio or program information.	Wait until the radio receives the information.
XM OFF AIR	XM channel not in service.	Try another XM channel.
XM NO SIGNAL	Loss of signal.	Both terrestrial and satellite antennas have lost signal. Park the vehicle outside with a clear view of the southern horizon.
XM UPDATING	XM radio is receiving information update from the network.	This message disappears once the update finishes.
XM ANTENNA	XM antenna error.	Repair open or short in the terrestrial or satellite antenna. Substitute the XM antenna and recheck. If the error is gone, replace the original XM antenna (see page 23-116). If the error is still present, replace the antenna lead.
————	No signal from XM.	Check a known-good vehicle with XM radio. If the known-good vehicle has the same symptoms, contact XM Satellite Radio at (800) 852—9696.

NOTE: Do these checks with the vehicle parked outside with a clear view of the southern horizon.

Audio Unit Error Codes

Error Code Displayed	Possible Cause	Solution
CODE ERROR 1	Anti-theft code mismatch (1st try).	Enter the correct anti-theft code.
CODE ERROR E	Anti-theft code mismatch (10th try).	Remove fuse No. 5 (7.5 A) in the driver's under-dash fuse/relay box, then reinsert it. You will have 10 more tries to enter the correct anti-theft code.

Symptom Troubleshooting

Poor AM or FM radio reception or interference

NOTE:
- Check the vehicle battery condition first (see page 22-90).
- Check the connectors for poor connection or loose terminals.
- Check the radio reception in an open area. Poor reception/interference can be caused by any of these conditions:
  - The radio station is too far away.
  - Atmospheric conditions are unfavorable.
  - After market metallic wi ndow tint.
  - A tall buildings, mountains, or a high-voltage power lines are nearby.

1. Turn the ignition switch to ON (II).

2. Do the seek stop test (see page 23-105).

   Is the test vehicle within 10 % of the known-good vehicle?

   YES—Multipath interference or weak station. Operation is normal. ■

   NO—Go to step 3.

3. Check if the radio reception/interference is the same in several locations.

   Is the reception/interference the same?

   YES—Go to step 4.

   NO—Multipath interference or weak station. Operation is normal. ■

4. Check the reception/interference while the engine is running.

   Is there noise (static or whine) only with the engine running?

   YES—Check the antenna and radio grounds. If OK, check the charging system and the ignition system. ■

   NO—Go to step 5.

5. Turn the ignition switch to LOCK (0).

6. Wrap aluminum foil (A) around the tip of a tester probe (B) as shown.

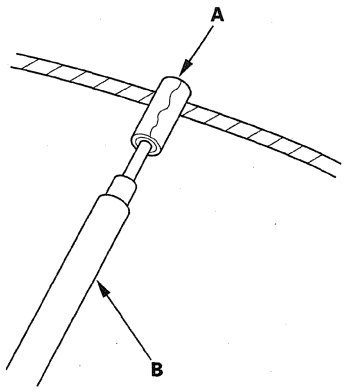

7. Touch one tester probe to the window near the antenna terminal (A), and move the other tester probe along the antenna wires to check for continuity. Repair if there is no continuity.

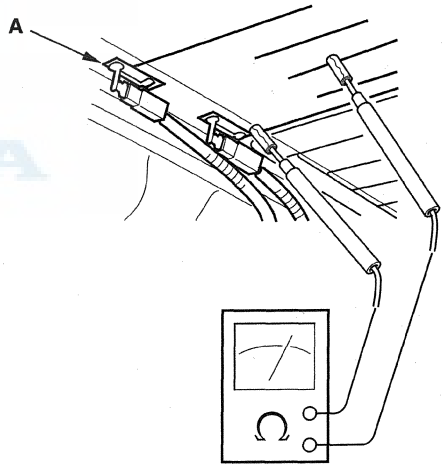

8. Remove the audio unit (see page 23-106). Check the audio unit connector E (5P) connection.

   Is it properly connected?

   YES—Go to step 9.

   NO—Reconnect the audio unit connector E (5P), and recheck the function. ■

(cont'd)

Symptom Troubleshooting (cont'd)

9. Disconnect the AM/FM antenna amplifier 3P connector (see page 23-115).
10. Turn the ignition switch to ON (II).
11. Turn on the audio unit, and select AM or FM.
12. Measure the voltage between AM/FM main antenna amplifier 3P connector terminal No. 3 AM/FM antenna amplifier lead and body ground.

AM/FM MAIN ANTENNA AMPLIFIER 3P CONNECTOR

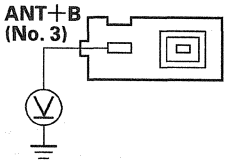

Terminal side of female terminals

Is there battery voltage?

YES—Go to step 17.

NO—Go to step 13.

13. Turn the ignition switch to LOCK (0).
14. Remove the audio unit (see page 23-106).
15. Disconnect audio unit connector E (5P).
16. Check for continuity between audio unit connector E (5P) terminal No. 5 and the AM/FM main antenna amplifier 3P connector terminal No. 3.

AUDIO UNIT CONNECTOR E (5P)
Terminal side of female terminals

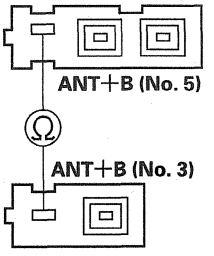

AM/FM MAIN ANTENNA AMPLIFIER 3P CONNECTOR
Terminal side of female terminals

Is there continuity?

YES—Go to step 17.

NO—Repair an open in the wire between the audio unit and the main antenna amplifier. Also check the AM/FM antenna lead/sublead connector. ■

17. Check for continuity between audio unit connector E (5P) terminal No. 5 and body ground.

AUDIO UNIT CONNECTOR E (5P)

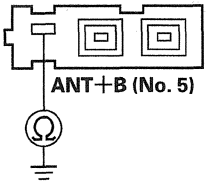

Terminal side of female terminals

Is there continuity?

YES—Repair a short to body ground in the wire between the audio unit and the AM/FM antenna amplifier. ■

NO—Replace the audio unit (see page 23-106). ■

18. Check for continuity between audio unit connector E (5P) terminal No. 3 and the AM/FM main antenna amplifier 3P connector terminal No. 1.

AUDIO UNIT CONNECTOR E (5P)
Terminal side of female terminals

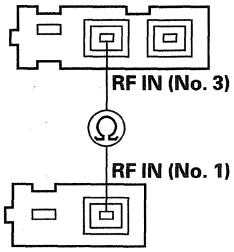

AM/FM MAIN ANTENNA AMPLIFIER 3P CONNECTOR
Terminal side of female terminals

Is there continuity?

YES—Go to step 19.

NO—Replace the AM/FM antenna sublead and/or main lead. ■

19. Check for continuity between audio unit connector E (5P) terminal No. 3 and body ground.

AUDIO UNIT CONNECTOR E (5P)

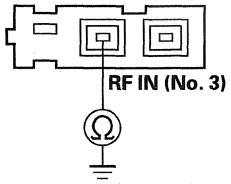

Terminal side of female terminals

Is there continuity?

YES—Replace the AM/FM antenna sublead and/or main lead. ■

NO—Go to step 20.

20. Check for continuity between audio unit connector E (5P) terminal No. 4 and the AM/FM main antenna amplifier 3P connector terminal No. 2.

AUDIO UNIT CONNECTOR E (5P)
Terminal side of female terminals

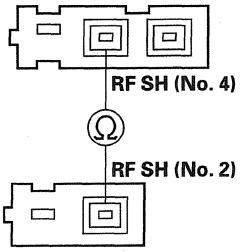

AM/FM MAIN ANTENNA AMPLIFIER 3P CONNECTOR
Terminal side of female terminals

Is there continuity?

YES—Go to step 21.

NO—Replace the AM/FM antenna sublead and/or main lead. ■

21. Check for continuity between audio unit connector E (5P) terminals No. 3 and No. 4.

AUDIO UNIT CONNECTOR E (5P)

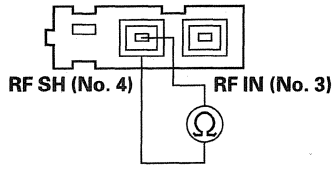

Terminal side of female terminals

Is there continuity?

YES—Replace the AM/FM antenna sublead and/or main lead. ■

NO—Go to step 22.

(cont'd)

Symptom Troubleshooting (cont'd)

22. Check for continuity between audio unit connector E (5P) terminal No. 1 and the AM/FM subantenna amplifier 3P connector terminal No. 1.

AUDIO UNIT CONNECTOR E (5P)
Terminal side of female terminals

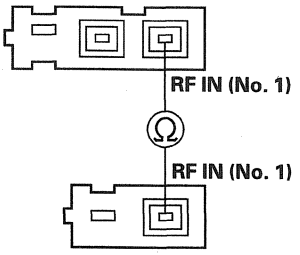

AM/FM SUBANTENNA AMPLIFIER 3P CONNECTOR
Terminal side of female terminals

Is there continuity?

YES—Go to step 23.

NO—Replace the AM/FM antenna sublead and/or main lead. ■

23. Check for continuity between audio unit connector E (5P) terminal No. 1 and body ground.

AUDIO UNIT CONNECTOR E (5P)

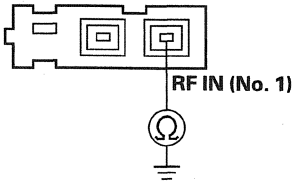

Terminal side of female terminals

Is there continuity?

YES—Replace the AM/FM antenna sublead and/or main lead. ■

NO—Go to step 24.

24. Check for continuity between audio unit connector E (5P) terminal No. 2 and the AM/FM subantenna amplifier 3P connector terminal No. 2.

AUDIO UNIT CONNECTOR E (5P)
Terminal side of female terminals

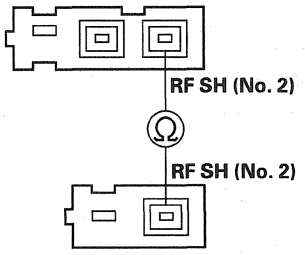

AM/FM SUBANTENNA AMPLIFIER 3P CONNECTOR
Terminal side of female terminals

Is there continuity?

YES—Go to step 25.

NO—Replace the AM/FM antenna sublead and/or main lead. ■

25. Check for continuity between audio unit connector E (5P) terminals No. 1 and No. 2.

AUDIO UNIT CONNECTOR E (5P)

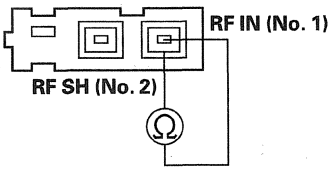

Terminal side of female terminals

Is there continuity?

YES—Replace the AM/FM antenna sublead and/or main lead. ■

NO—Replace the AM/FM antenna amplifier (see page 23-115), and recheck. If the reception is still poor, replace the audio unit (see page 23-106). ■

Audio unit power switch will not turn on (No information display and no sound)

NOTE:
- Check the vehicle battery condition first (see page 22-90).
- Check the connectors for poor connections or loose terminals.
- Eject all the CDs before removing the audio unit and CD changer to prevent damaging the CD player's load mechanism.

1. Turn the ignition switch to ON (II).

2. Push the power switch on to see if the audio unit turns on.

   Does the audio unit display operate properly, and does the audio unit sound normal?

   YES—Intermittent failure, the system is OK at this time. ■

   NO—Go to step 3.

3. Turn the ignition switch to LOCK (0).

4. Check the No. 5 (7.5 A) fuse and the No. 32 (10 A) fuse in the driver's under-dash fuse/relay box.

   Are the fuses OK?

   YES—Go to step 5.

   NO—Replace the fuse, and recheck. ■

5. Remove the audio unit (see page 23-106). Check that the audio unit is properly connected.

   Are they connected properly?

   YES—Go to step 6.

   NO—Repair poor connections and reconnect the connectors, and recheck the function. ■

6. Turn the ignition switch to ON (II).

7. Measure the voltage between body ground and audio unit connector A (20P) terminals No. 2 and No. 10 individually.

AUDIO UNIT CONNECTOR A (20P)

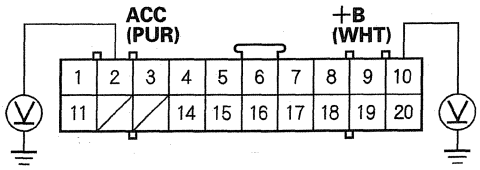

Wire side of female terminals

Is there battery voltage?

YES—Go to step 8.

NO—Repair an open in the wire(s) between the No. 5 (7.5 A) fuse and the No. 32 (10 A) fuse in the driver's under-dash fuse/relay box and the audio unit. ■

8. Measure the voltage between audio unit connector A (20P) terminal No. 20 and body ground.

AUDIO UNIT CONNECTOR A (20P)

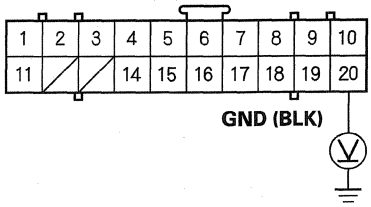

Wire side of female terminals

Is there less than 0.2 V?

YES—Substitute a known-good audio unit (see page 23-106), and recheck. If the symptom/indication goes away, replace the original audio unit (see page 23-106). ■

NO—Repair an open in the wire between audio unit connector A (20P) terminal No. 20 and body ground (G504) (see page 22-36). ■

Symptom Troubleshooting (cont'd)

Audio unit power switch will not turn off

NOTE:
- Check the vehicle battery condition first (see page 22-90).
- Check the connectors for poor connection or loose terminals.
- Check for aftermarket accessories plugged into the vehicle accessory power sockets.
- Eject all the CDs before removing the audio unit and CD changer to prevent damaging the CD player's load mechanism.

1. Turn the ignition switch to ON (II).
2. Push the power switch off to see if the audio unit turns off.

   Does the audio unit turn off?

   YES—Go to step 3.

   NO—Replace the audio unit (see page 23-106). ■
3. Push the power switch on, then turn the ignition switch to LOCK (0).

   Does the audio unit turn off?

   YES—Operation is normal. ■

   NO—Go to step 4.
4. Turn the ignition switch to ON (II).
5. Measure the voltage between audio unit connector A (20P) terminal No. 2 and body ground.

AUDIO UNIT CONNECTOR A (20P)

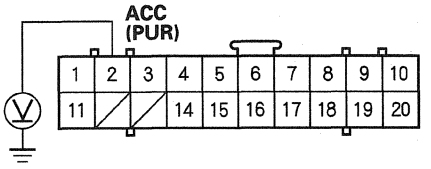

Wire side of female terminals

Is there battery voltage?

YES—Check for short to power on the PUR wire. ■

NO—Substitute a known-good audio unit (see page 23-106), and recheck. If the symptom/indication goes away, replace the original audio unit (see page 23-106). ■

No sound is heard from the speaker(s) (display is normal)

NOTE:
- Check the vehicle battery condition first (see page 22-90).
- Check the connectors for poor connections or loose terminals.
- Set the fader and balance positions to the center.
- Before doing symptom troubleshooting, do the audio unit power switch will not turn on troubleshooting (see page 23-47).

1. Turn the ignition switch to ON (II).

2. Turn on the audio unit, and check that the volume button is not set the MIN level.

   Is it at the MIN level?

   YES—Raise the volume level, and recheck the function. ■

   NO—Go to step 3.

3. On the steering wheel, check the navigation talk command, and/or the HandsFreeLink talk command functions.

   Are the navigation talk command and/or the HFL talk command functions set?

   YES—Cancel the navigation talk command by pressing the navigation BACK button, and for the HFL talk command, press the HFL BACK button, then recheck the function.

   NO—Go to step 4.

4. Check to see if there is a specific speaker(s) that has no sound.

   Is there a specific speaker without sound?

   YES—Go to step 5.

   NO—Go to step 8.

5. Turn the ignition switch to LOCK (0).

6. Check the speaker(s) that has no sound for any damage.

   Is there any damage?

   YES—Replace the speaker(s), and recheck. ■

   NO—Go to step 7.

7. Remove the speaker(s) that has no sound (see page 23-108), and disconnect its connector.

8. Check the speaker 2P connector for a loose or poor connection.

   Reconnect the speaker 2P connector, and recheck the symptom; is the condition still present?

   YES—Go to step 9.

   NO—Intermittent failure. Operation is normal. ■

9. Measure the resistance between the terminals No. 1 and No. 2 of the speaker connector.

   Is there speaker(s) OK?

   YES—Go to step 10.

   NO—Replace the speaker(s), and recheck. ■

(cont'd)

Symptom Troubleshooting (cont'd)

10. Measure the voltage between stereo amplifier connector B (14P) terminal No. 4 and body ground.

STEREO AMPLIFIER CONNECTOR B (14P)

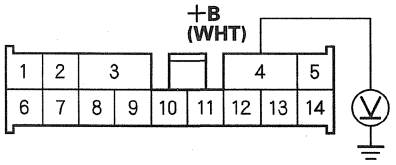

Wire side of female terminals

Is there battery voltage?

YES—Go to step 11.

NO—Repair an open in the wire between the No. 2 (30 A) fuse in the passenger's under-dash fuse/relay box and stereo amplifier connector B (14P) terminal No. 4. ■

11. Measure the voltage between stereo amplifier connector C (23P) terminal No. 19 and body ground.

STEREO AMPLIFIER CONNECTOR C (23P)

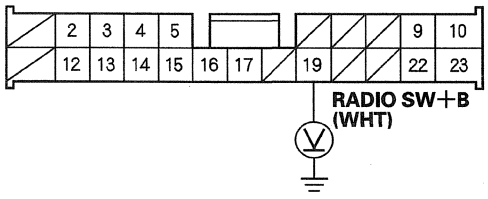

Wire side of female terminals

Is there battery voltage?

YES—Go to step 12.

NO—Repair an open in the wire between stereo amplifier connector C (23P) terminal No. 19 and audio unit connector A (20P) terminal No. 1. If the wire and pin fits are OK, substitute a known-good audio unit (see page 23-106), and recheck. If the symptom/indication goes away, replace the original audio unit (see page 23-106). ■

12. Measure the voltage between stereo amplifier connector B (14P) terminal No. 3 and body ground.

STEREO AMPLIFIER CONNECTOR B (14P)

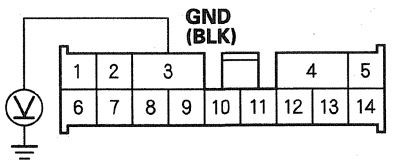

Wire side of female terminals

Is there less than 0.2 V?

YES—Go to step 13.

NO—Repair an open in the wire between stereo amplifier connector B (14P) terminal No. 3 and body ground (G652) (see page 22-46). ■

13. Disconnect stereo amplifier connector B (14P) and C (23P).

14. Measure the resistance of stereo amplifier connectors B (14P) and C (23P) according to the table.

Speaker	Terminal	Wire color	Resistance
Driver's door speaker	C23 (+)	LT BLU	About 2 Ω
	C10 (−)	LT GRN	
Left front tweeter	C23 (+)	LT BLU	About 3.6 Ω
	C10 (−)	LT GRN	
Passenger's door speaker	B6 (+)	LT GRN	About 2 Ω
	B1 (−)	GRY	
Right front tweeter	B6 (+)	LT GRN	About 3.6 Ω
	B1 (−)	GRY	
Front center speaker	C22 (+)	BLU	About 4 Ω
	C9 (−)	PNK	
Right rear speaker	B8 (+)	BLU	About 2 Ω
	B9 (−)	ORN	
Right rear twiddler	B12 (+)	GRY	About 4 Ω
	B13 (−)	BLU	
Subwoofer	B5 (+)	BRN	About 2 Ω
	B14 (−)	GRN	
Left rear twiddler	B10 (+)	PUR	About 4 Ω
	B11 (−)	LT BLU	
Left rear speaker	B7 (+)	GRY	About 2 Ω
	B2 (−)	BRN	

STEREO AMPLIFIER CONNECTOR B (14P)

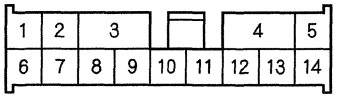

Wire side of female terminals

STEREO AMPLIFIER CONNECTOR C (23P)

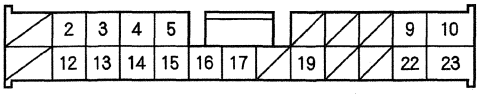

Wire side of female terminals

Is there resistance OK?

YES—Go to step 15.

NO—Repair an open in the wire between the stereo amplifier and the speakers. ■

15. Disconnect the speaker 2P connector.

16. Check for continuity between stereo amplifier connector B (14P) and C (23P) terminals and body ground according to the table.

Speaker	Terminal	Wire color
Driver's door speaker	C23 (+)	LT BLU
	C10 (−)	LT GRN
Left front tweeter	C23 (+)	LT BLU
	C10 (−)	LT GRN
Front passenger's door speaker	B6 (+)	LT GRN
	B1 (−)	GRY
Right front tweeter	B6 (+)	LT GRN
	B1 (−)	GRY
Left rear speaker	B7 (+)	GRY
	B2 (−)	BRN
Right rear speaker	B8 (+)	BLU
	B9 (−)	ORN
Left rear twiddler speaker	B10 (+)	PUR
	B11 (−)	LT BLU
Right rear twiddler speaker	B12 (+)	GRY
	B13 (−)	BLU
Front center speaker	C22 (+)	BLU
	C9 (−)	PNK
Subwoofer	B5 (+)	BRN
	B14 (−)	GRN

STEREO AMPLIFIER CONNECTOR B (14P)

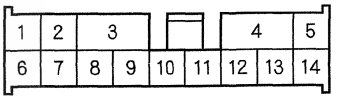

Wire side of female terminals

STEREO AMPLIFIER CONNECTOR C (23P)

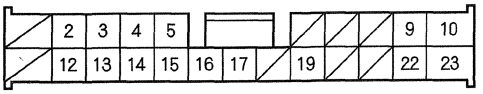

Wire side of female terminals

Is there continuity?

YES—Go to step 17.

NO—Repair a short in the wire between the stereo amplifier and the appropriate speakers. ■

(cont'd)

Symptom Troubleshooting (cont'd)

17. Reconnect the 2P connector(s) to the speaker(s).

18. Disconnect audio unit connector A (20P) and audio unit connector B (32P).

    NOTE: Eject all the CDs before removing the audio unit and CD changer to prevent damaging the CD player's load mechanism.

19. Disconnect stereo amplifier connector A (26P).

20. Check for continuity between audio unit connector A (20P) and body ground according to the table. Then check for continuity between the same terminals listed in the table and audio unit connector A (20P) terminal No. 14 (the harness shield).

Audio unit connector	Wire color
A5	BLU
A6	PUR
A7	GRN
A8	PNK
A15	BRN
A16	LT GRN
A17	LT BLU
A18	RED

AUDIO UNIT CONNECTOR A (20P)

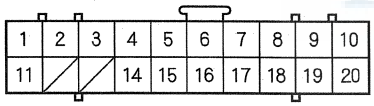

Wire side of female terminals

Is there continuity?

YES—There is a short in the wire between the audio unit and the stereo amplifier or a short between the shield wires. Replace the affected shielded harness. ■

NO—Go to step 21.

21. Check for continuity between audio unit connector B (32P) and body ground according to the table. Then check for continuity between the same terminals listed in the table and audio unit connector B (32P) terminal No. 19 (the harness shield).

Audio unit connector	Wire color
B1	BRN
B2	PNK
B17	LT GRN
B18	LT BLU

AUDIO UNIT CONNECTOR B (32P)

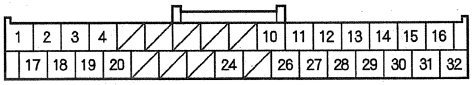

Wire side of female terminals

Is there continuity?

YES—There is a short in the wire between the audio unit and the stereo amplifier or a short between the shield wires. Replace the affected shielded harness.

NO—Go to step 22.

22. Check for continuity between audio unit connector B (32P) and body ground according to the table. Then check for continuity between the same terminals listed in the table and audio unit connector B (32P) terminal No. 3 (the harness shield).

Audio unit connector	Wire color
B4	GRN
B20	RED

AUDIO UNIT CONNECTOR B (32P)

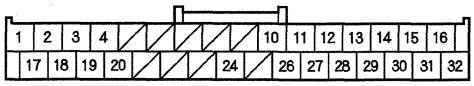

Wire side of female terminals

Is there continuity?

YES—There is a short in the wire(s) between the audio unit and the stereo amplifier or a short between the shield wires. Replace the affected shielded harness. ■

NO—Go to step 23.

23. Check for continuity between audio unit connectors A (20P) and B (32P) and stereo amplifier connector A (26P) according to the table.

Audio unit connector	Stereo amplifier connector	Wire color
A5	A5	BLU
A6	A19	PUR
A7	A12	GRN
A8	A25	PNK
A15	A6	BRN
A16	A20	LT GRN
A17	A13	LT BLU
A18	A26	RED
B1	A21	BRN
B2	A7	PNK
B4	A10	GRN
B17	A22	LT GRN
B18	A8	LT BLU
B20	A11	RED

AUDIO UNIT CONNECTOR A (20P)

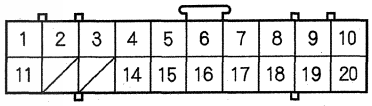

Wire side of female terminals

STEREO AMPLIFIER CONNECTOR A (26P)

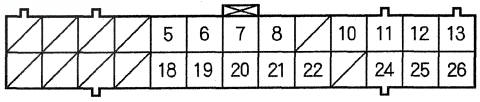

Wire side of female terminals

Is there continuity?

YES—Substitute a known-good audio unit (see page 23-106), and recheck. If the symptom/indication goes away, replace the original audio unit (see page 23-106). If symptom is still present, substitute a known-good stereo amplifier (see page 23-111), and recheck. If the symptom/indication goes away, replace the original stereo amplifier (see page 23-111). ■

NO—Repair an open in the wire(s) between the audio unit and the stereo amplifier. ■

Symptom Troubleshooting (cont'd)

Audio system sound is weak or distorted (display is normal)

NOTE:
- Check the vehicle battery condition first (see page 22-90).
- Check the connectors for poor connection or loose terminals.

1. Turn the ignition switch to ON (II).

2. Turn on the audio unit, and check for sound in each mode (AM, FM, XM, and CD).

   Is there sound from the speakers, and is the sound quality normal in each mode?

   YES—Intermittent failure. The system is OK at this time. Check for loose connections at the audio unit, the amplifier, and each speaker. ■

   NO—Speakers all work, sound quality is poor. ■

   - If sound quality is poor only with the XM radio, or the XM radio does not function, go to poor or no sound with XM radio (see page 23-98).
   - If the sound quality is poor only with AM or FM, go to poor radio reception or interference (see page 23-43).
   - If the sound is poor in all modes, go to sound quality diagnosis (see page 23-100).

Auxiliary input sound is low or cannot be heard

NOTE:
- Check the vehicle battery condition first (see page 22-90).
- Check the connectors for poor connections or loose terminals.
- Use auxiliary stereo cables with 3.5 mm ends only.
- Auxiliary accessories may be played on the audio unit using the auxiliary input.

1. Turn the ignition switch to ON (II).

2. Turn on the audio unit and connect an auxiliary accessory to the auxiliary input jack.

3. Adjust the audio unit volume and check the audio unit in all modes (AM, FM, CD, XM, etc.)

   Is the sound normal from the vehicle speakers?

   YES—Operation is normal at this time. ■

   NO—Go to step 4.

4. Turn on the auxiliary audio accessory and make sure the auxiliary accessory volume is set to max.

   Do you hear the auxiliary audio accessory?

   YES—Tell the customer they need to adjust the volume on their accessory unit to high. ■

   NO—Go to step 5.

5. Substitute a known-good auxiliary audio accessory and/or auxiliary stereo cable, and recheck.

   Does the auxiliary audio accessory operate properly from the vehicle speakers?

   YES—Original auxiliary audio accessory or the auxiliary stereo cable is faulty. ■

   NO—Go to step 6.

6. Turn the ignition switch to LOCK (0).

7. Remove the auxiliary jack assembly (see page 23-112) and check that the auxiliary jack assembly is properly connected.

   Is the auxiliary jack assembly connected properly?

   YES—Go to step 8.

   NO—Reconnect the connector, and recheck the function. ■

8. Disconnect auxiliary jack assembly 5P connector.

9. Disconnect audio unit connector D (6P).

10. Check for continuity between body ground and audio unit connector D (6P) according to the table.

Audio unit connector	Wire color
D1	YEL
D2	BLK
D3	RED
D4	GRN
D5	WHT

AUDIO UNIT CONNECTOR (6P)

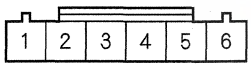

Wire side of female terminals

Is there continuity?

YES—There is a short to body ground in the wire(s) between the audio unit and the auxiliary jack assembly. Replace the affected shielded harness. ■

NO—Go to step 11.

11. Check for continuity between audio unit connector D (6P) according to the table.

From terminal	To terminals
D1 (YEL)	D2 (BLK), D3 (RED), D4 (GRN), D5 (WHT), D6 (GRY)
D2 (BLK)	D3 (RED), D4 (GRN), D5 (WHT), D6 (GRY)
D3 (RED)	D4 (GRN), D5 (WHT), D6 (GRY)
D4 (GRN)	D5 (WHT), D6 (GRY)
D5 (WHT)	D6 (GRY)

AUDIO UNIT CONNECTOR (6P)

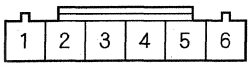

Wire side of female terminals

Is there continuity?

YES—There is a short in the wire(s) between the audio unit and the auxiliary jack assembly. Replace the affected shielded harness. ■

NO—Go to step 12.

(cont'd)

Symptom Troubleshooting (cont'd)

12. Check for continuity between audio unit connector D (6P) and auxiliary jack assembly 5P connector according to the table.

Audio unit connector	Auxiliary jack assembly 5P connector	Wire color
D1	1	YEL
D2	2	BLK
D3	5	RED
D4	3	GRN
D5	4	WHT

AUDIO UNIT CONNECTOR (6P)

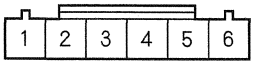

Wire side of female terminals

AUXILIARY JACK ASSEMBLY 5P CONNECTOR

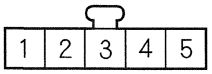

Wire side of female terminals

Is there continuity?

YES—Substitute a known-good auxiliary jack assembly (see page 23-112), and recheck. If the symptom/indication goes away, replace the original auxiliary jack assembly (see page 23-112). If the symptom/indication is still present, replace the audio unit (see page 23-106). ■

NO—There is an open in the wire(s) between the audio unit and the auxiliary jack assembly. Replace the affected shielded harness. ■

Radio preset memory is lost

NOTE:
- Check the vehicle battery condition first (see page 22-90).
- Check the connectors for poor connections or loose terminals.
- If only XM stations are lost, go to XM radio preset memory is lost (see page 23-95).
- Make sure the remotes are linked. Do this by checking to see if the MID displays "Welcome Drv 1" or "Welcome Drv 2" when you turn the ignition switch to ON (II).

1. Turn the ignition switch to ON (II).

2. Turn on the audio unit, and set each of the radio station preset buttons.

   Does each preset button set properly?

   YES—Go to step 4.

   NO—Go to step 3.

3. Measure the voltage between audio unit connector A (20P) terminal No. 10 and body ground.

AUDIO UNIT CONNECTOR A (20P)

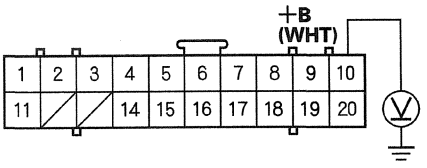

Wire side of female terminals

Is there battery voltage?

YES—Go to step 4.

NO—Repair an open in the wire between the No. 5 (7.5 A) fuse and driver's under-dash fuse/relay box and audio unit connector A (20P) terminal No. 10. ■

4. Measure the voltage between audio unit connector A (20P) terminal No. 20 and body ground.

AUDIO UNIT CONNECTOR A (20P)

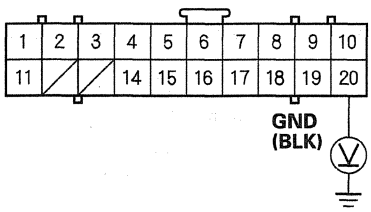

Wire side of female terminals

Is there less than 0.2 V?

YES—Go to step 5.

NO—Repair an open in the wire between audio unit connector A (20P) terminal No. 20 and body ground (G504) (see page 22-36). ■

5. Turn the ignition switch to LOCK (0) for 1 minute, then turn it back to ON (II).

6. Test the preset buttons for proper recall operation.

Do the preset buttons recall the set radio stations?

YES—System is normal at this time. Check connections at the audio unit. ■

NO—Substitute a known-good audio unit (see page 23-106), and recheck. If the symptom/indication goes away, replace the original audio unit (see page 23-106). ■

Volume does not change

NOTE:
- Check the connectors for poor connection or loose terminals.
- Set the fader and balance positions to the center.
- Check the vehicle battery condition first (see page 22-90).

1. Turn the ignition switch to ON (II).

2. Turn on the audio unit, and check for sound in each mode (AM, FM, XM, and CD).

Is the sound normal?

YES—Go to step 3.

NO—Go to audio system sound is weak or distorted, or no sound is heard from speaker(s) (see page 23-49). ■

3. Operate the volume knob to see if the volume changes.

Does the volume change?

YES—Operation is normal. ■

NO—Substitute a known-good audio unit (see page 23-106), and recheck. If the symptom/indication goes away, replace the original audio unit (see page 23-106). ■

Symptom Troubleshooting (cont'd)

Radio tuner does not change stations

NOTE:
- Check the vehicle battery condition first (see page 22-90).
- Check the connectors for poor connections or loose terminals.

1. Turn the ignition switch to ON (II).
2. Turn on the audio unit, and check the audio information on the display panel.

   Does the audio information display properly?

   YES—Go to step 3.

   NO—Go to audio unit power switch will not turn on (see page 23-47). ■
3. Operate the tuning knob to see if the radio station changes.

   Does the radio station change?

   YES—Intermittent failure, the tuning knob is OK at this time. ■

   NO—Substitute a known-good audio unit (see page 23-106), and recheck. If the symptom/indication goes away, replace the original audio unit (see page 23-106). ■

Audio unit button illumination does not work

NOTE:
- Check the vehicle battery condition first (see page 22-90).
- Check the connectors for poor connections or loose terminals.

1. Turn the ignition switch to ON (II).
2. Turn the combination lighting switch to the parking light position.
3. Check the illumination of the audio unit buttons.

   Are the buttons illuminated?

   YES—Intermittent problem: the audio unit is OK at this time. Check for loose or poor connections at audio unit connector A (20P). ■

   NO—Go to step 4.
4. Check the illumination of several other buttons not related to the audio system.

   Are the buttons illuminated?

   YES—Go to step 5.

   NO—Troubleshoot the interior lights. Start by checking the No. 7 (7.5 A) fuse in the passenger's under-dash fuse/relay box. If the fuse is OK, check for an open in the wire between the passenger's under-dash fuse/relay box and the audio unit. ■
5. Turn the ignition switch to LOCK (0).
6. Disconnect audio unit connector A (20P).

   NOTE: Eject all the CDs before removing the audio unit and CD changer to prevent damaging the CD player's load mechanism.
7. Disconnect gauge control module connector A (20P).

8. Check for continuity between audio unit connector A (20P) terminal No. 19 and gauge control module connector A (20P) terminal No. 1.

AUDIO UNIT CONNECTOR A (20P)
Wire side of female terminals

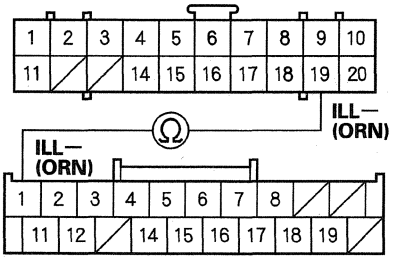

GAUGE CONTROL MODULE CONNECTOR A (20P)
Wire side of female terminals

Is there continuity?

YES—Go to step 9.

NO—Repair an open in the wire between the gauge control module and the audio unit. ■

9. Turn the ignition switch to ON (II).

10. With the headlight switch still on, measure the voltage between audio unit connector A (20P) terminal No. 9 and body ground.

AUDIO UNIT CONNECTOR A (20P)

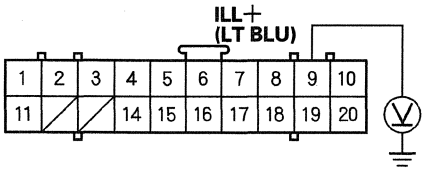

Wire side of female terminals

Is there battery voltage?

YES—Check the connections at audio unit connector A (20P). If all connections are OK, replace the audio unit (see page 23-106). ■

NO—Repair an open in the wire between the passenger's under-dash fuse/relay box and the audio unit. ■

Audio remote switch does not work properly

NOTE:
- Check the vehicle battery condition first (see page 22-90).
- Check the connectors for poor connections or loose terminals.

1. Turn the ignition switch to ON (II).

2. Turn on the audio unit, and check the audio remote switch operation (volume up, volume down, CH (UP), CH (DOWN), MODE).

   Is the audio remote switch operation OK?

   YES—Intermittent failure, the audio remote switch is OK at this time. Check for loose connections. ■

   NO—Go to step 3.

3. Test the audio remote switch (see page 23-115).

   Is the audio remote switch OK?

   YES—Go to step 4.

   NO—Replace the audio remote switch (see page 17-23). ■

4. Turn the ignition switch to LOCK (0).

5. Remove the audio unit (see page 23-106).

6. Disconnect audio unit connector A (20P).

(cont'd)

Symptom Troubleshooting (cont'd)

7. Reconnect the audio remote switch, and measure the resistance between audio unit connector A (20P) terminals No. 3 and No. 11 as specified in the table.

AUDIO UNIT CONNECTOR A (20P)

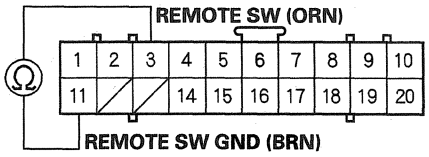

Wire side of female terminals

AUDIO REMOTE SWITCH TABLE

Button held down	VOL DOWN	VOL UP	CH (−)	CH (+)	MODE	(No button pressed)
Resistance	about 100 Ω	about 357 Ω	about 775 Ω	about 1.7 kΩ	about 3.7 kΩ	about 10 kΩ

Is the resistance OK?

YES—Go to step 8.

NO—Repair a short or high resistance in the circuit between audio unit and the audio remote switch. If the wires are OK, replace the cable reel (see page 24-212). ■

8. Check for continuity between body ground and audio unit connector A (20P) terminals No. 3 and No. 11 individually.

AUDIO UNIT CONNECTOR A (20P)

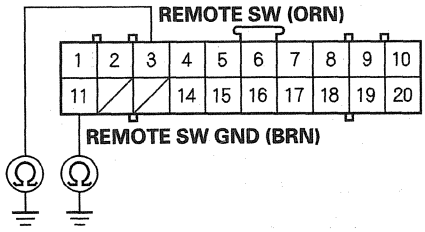

Wire side of female terminals

Is there continuity?

YES—Repair a short to body ground in the circuit between the audio unit and the audio remote switch. If the wires are OK, replace the cable reel (see page 24-212). ■

NO—Substitute a known-good audio unit (see page 23-106) and recheck. If the symptom/indication goes away, replace the original audio unit (see page 23-106). ■

Audio disc does not load

NOTE:
- Check the vehicle battery condition first (see page 22-90).
- Check the connectors for poor connections or loose terminals.
- Disc labels should not be used in the audio unit. They may jam, and damage the player mechanism.
- Make sure the audio disc is compatible with the system (see the owner's manual for more information).

1. Turn the ignition switch to ON (II).

2. Turn on the audio unit, and insert a known-good disc to see if the symptom can be duplicated.

   Does the disc load?

   YES—Operation is normal. If the disc loads normally, but will not play, go to audio disc does not play (see page 23-63). ■

   NO—Go to step 3.

3. Insert another disc.

   Does the disc load?

   YES—The original disc is faulty. ■

   NO—Substitute a known-good audio unit (see page 23-106), and recheck. If the symptom/indication goes away, replace the original audio unit (see page 23-106). ■

Audio disc does not eject

NOTE:
- Check the vehicle battery condition first (see page 22-90).
- Check the connectors for poor connections or loose terminals.
- Disc labels should not be used in the audio unit. They may jam, and damage the player mechanism.

1. Turn the ignition switch to ON (II).

2. Turn on the audio system.

   Does the system turn on?

   YES—Go to step 3.

   NO—Go to audio unit power switch will not turn on (see page 23-47). ■

3. Check to see if the disc ejects correctly with no binding by pushing the EJECT button.

   Does the disc eject properly?

   YES—Operation is normal. ■

   NO—Substitute a known-good audio unit (see page 23-106), and recheck. If the symptom/indication goes away, replace the original audio unit (see page 23-106). ■

Symptom Troubleshooting (cont'd)

Audio disc changer does not load all six discs

NOTE:
- Check the vehicle battery condition first (see page 22-90).
- Check the connectors for poor connections or loose terminals.
- Disc labels should not be used in the audio unit. They may jam, and damage the player mechanism.

1. Turn the ignition switch to ON (II).
2. Turn on the audio unit, and try loading six discs into the audio unit.

   Does the audio unit accept all six discs?

   YES—Intermittent failure, the audio unit is OK at this time. ■

   NO—Go to step 3.
3. Try loading the disc player with six known-good discs.

   Does the audio unit/audio disc changer accept all six discs?

   YES—At least one of the original discs is faulty. ■

   NO—Substitute a known-good audio unit (see page 23-106), and recheck. If the symptom/indication goes away, replace the original audio unit (see page 23-106). ■

Audio disc changer does not move between discs

NOTE:
- Check the vehicle battery condition first (see page 22-90).
- Check the connectors for poor connections or loose terminals.
- Disc labels should not be used in the audio unit. They may jam, and damage the player mechanism.

1. Turn the ignition switch to ON (II).
2. Turn on the audio unit, and insert six discs into the audio unit/audio disc changer and see if the changer moves between discs.

   Does the changer operate normally?

   YES—Intermittent failure, the disc changer is OK at this time. ■

   NO—Go to step 3.
3. Insert six known-good discs into the audio unit.

   Does the changer operate normally?

   YES—At least one of the original discs is faulty. ■

   NO—Substitute a known-good audio unit (see page 23-106), and recheck. If the symptom/indication goes away, replace the original audio unit (see page 23-106). ■

Special tools required
Diagnostics CD 07AAZ-SDBA100

Audio disc does not play

NOTE:
- Check the vehicle battery condition first (see page 22-90).
- Check the connectors for poor connections or loose terminals.
- Disc labels should not be used in the audio unit. They may jam, and damage the player mechanism.

1. Turn the ignition switch to ON (II).

2. Turn on the audio unit, and try loading a disc.

   Does the disc load?

   YES—Go to step 3.

   NO—Go to audio disc does not load (see page 23-61). ■

3. Insert a known-good disc to see if the symptom can be duplicated.

   Does the disc play?

   YES—Operation is normal. ■

   NO—Go to step 4.

4. Insert audio diagnostic CD (T/N 07AAZ-SDBA100) in the audio unit.

   Does the disc play?

   YES—The original disc is faulty or has an unreadable format. ■

   NO—Substitute a known-good audio unit (see page 23-106), and recheck. If the symptom/indication goes away, replace the original audio unit (see page 23-106). ■

Special tools required
- Diagnostics CD 07AAZ-SDBA100
- Skip test CD 07AAZ-SDBA200
- Skip test CD 07AAZ-SDBA300

Audio disc skips

NOTE:
- Check the vehicle battery condition first (see page 22-90).
- Check the connectors for poor connections or loose terminals.
- Disc labels should not be used in the audio unit. They may jam, and damage the player mechanism.

1. Turn the ignition switch to ON (II).

2. Confirm the vehicles tires are properly inflated.

3. Check the client's CD for scratches and fingerprints.

   NOTE: The following test should be done with the audio unit bass and treble set to the client's listening settings. When comparing to known-good vehicles, the comparison should be done on the same model and trim level.

4. Test-drive the vehicle to identify when the client's CD skips. The audio diagnostic CD (T/N 07AAZ-SDBA100) can be used if the client's CD is not available; use tracks 10—12.

   Does the disc skip?

   YES—Go to step 5.

   NO—Operation is normal. ■

5. Compare the client's CD that is skips to a known-good vehicle under the same conditions.

   Does the disc skip in the known-good vehicle under the same conditions?

   YES—The CD player operation is normal, the problem is with the client's disc. ■

   NO—Go to step 6.

   NOTE: Do the following test with vehicle parked and the engine running.

(cont'd)

Symptom Troubleshooting (cont'd)

6. Insert the diagnostic skip test CD (T/N 07AAZ-SDBA300). Play tracks 2—11, and note on which track number(s) the disc starts skipping. Do the same test on a known-good vehicle.

   Does the disc skip on same track(s) as the known-good vehicle?

   YES—Operation is normal. ■

   NO—Go to step 7.

7. Insert the diagnostic skip test CD (T/N 07AAZ-SDBA200). Play tracks 7—11 and tracks 13—15, and note on which track number(s) where the CD starts skipping. Do the same test on a known-good vehicle.

   Does the disc skip on same track number(s) as the known-good vehicle?

   YES—Operation is normal. ■

   NO—Substitute a known-good audio unit (see page 23-106), and recheck. If the symptom/indication goes away, replace the original audio unit (see page 23-106). ■

Booming sound while driving with audio unit on or off

NOTE:
- Check the vehicle battery condition first (see page 22-90).
- Check the connectors for poor connections or loose terminals.

1. Turn the ignition switch to ON (II).

2. Operate the audio unit, and check the function of the speakers.

   Is a booming sound heard from the speakers?

   YES—Go to step 3.

   NO—Go to no sound is heard from speaker(s) (see page 23-49). ■

3. Open the driver's door, with the booming sound present.

   Is the booming sound still present?

   YES—Do the electrical noise test (see page 23-101). ■

   NO—Go to step 4.

4. Turn the audio power switch to off.

5. Do the active noise cancellation (ANC) self-diagnostic function (see page 23-41).

6. Press the No. 1 button.

   Is the low-frequency hum sound heard?

   YES—Go to step 7.

   NO—Go to step 25.

7. Check that the low-frequency hum sound continues sounding for about 1 minute.

   Does the low-frequency hum sound continue sounding for about 1 minute?

   YES—Go to step 44.

   NO—Go to step 8.

8. Check the No. 5 (7.5 A) fuse in the driver's under-dash fuse/relay box.

   Is the fuse OK?

   YES—Go to step 9.

   NO—Replace the fuse, and recheck. ■

9. Measure the voltage between active noise cancellation front and rear microphone connector B (3P) terminal No. 3 and body ground.

   ACTIVE NOISE CANCELLATION FRONT or REAR MICROPHONE CONNECTOR B (3P)

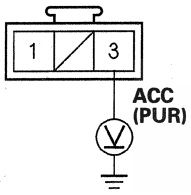

   Terminal side of male terminals

   Is there battery voltage?

   YES—Go to step 10.

   NO—Repair an open in the wire between the No. 32 (10 A) fuse in the driver's under-dash fuse/relay box and active noise cancellation front or rear microphone connector B (3P). ■

10. Measure the voltage between active noise cancellation front and rear microphone connector B (3P) terminal No. 1 and body ground.

    ACTIVE NOISE CANCELLATION FRONT or REAR MICROPHONE CONNECTOR B (3P)

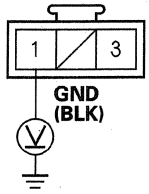

    Terminal side of male terminals

    Is there less than 0.2 V?

    YES—Go to step 11.

    NO—Repair an open in the wire between active noise cancellation front or rear microphone connector B (3P) terminal No. 1 and body ground (G652) (see page 22-46). ■

11. Turn the ignition switch to LOCK (0).

12. Disconnect active noise control front microphone connector A (2P) and active noise cancellation rear microphone connector A (2P), active noise control unit 16P connector, and stereo amplifier connector C (23P).

(cont'd)

Symptom Troubleshooting (cont'd)

13. Check for continuity between body ground and active noise cancellation front and rear microphone connector A (2P) terminals No. 1 and No. 2 individually.

FRONT

ACTIVE NOISE CANCELLATION FRONT MICROPHONE CONNECTOR A (2P)

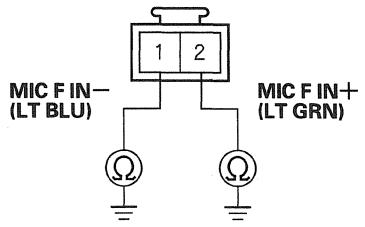

Terminal side of male terminals

REAR

ACTIVE NOISE CANCELLATION REAR MICROPHONE CONNECTOR A (2P)

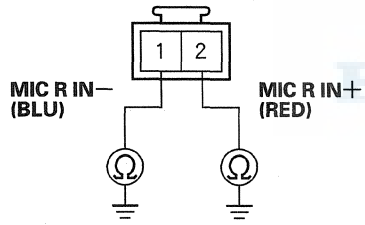

Terminal side of male terminals

Is there continuity?

YES—Repair a short in the wire between body ground and active noise cancellation front or rear microphone connector A (2P) terminals No. 1 and No. 2. ■

NO—Go to step 14.

14. Reconnect the active noise cancellation front and rear microphone control unit, and the stereo amplifier connectors.

15. Turn the ignition switch to ON (II).

16. Measure the voltage between body ground and active noise cancellation front or rear microphone connector A (2P) terminals No. 1 and No. 2 individually while lightly tapping the microphones.

FRONT

ACTIVE NOISE CANCELLATION FRONT MICROPHONE CONNECTOR A (2P)

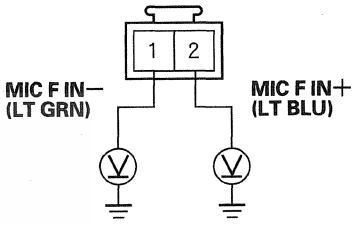

Terminal side of male terminals

REAR

ACTIVE NOISE CANCELLATION REAR MICROPHONE CONNECTOR A (2P)

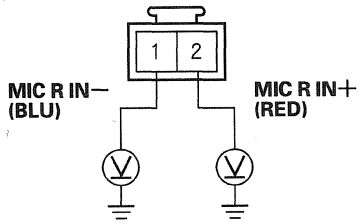

Terminal side of male terminals

Does the voltage fluctuate when you tap the microphones?

YES—Go to step 17.

NO—Replace the active noise cancellation front or rear microphone. ■

17. Turn the ignition switch to LOCK (0).

18. Disconnect the active noise cancellation unit 16P connector.

19. Disconnect active noise cancellation front microphone connector A (2P).

20. Check for continuity between active noise cancellation unit 16P connector terminal No. 3 and active noise cancellation front microphone connector A (2P) terminal No. 2.

ACTIVE NOISE CANCELLATION UNIT 16P CONNECTOR
Wire side of female terminals

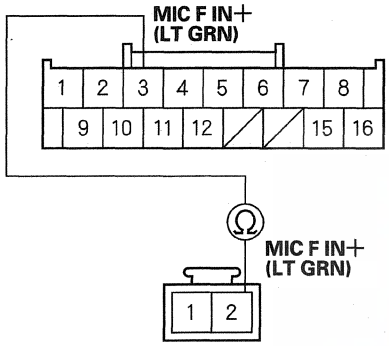

ACTIVE NOISE CANCELLATION FRONT MICROPHONE CONNECTOR A (2P)
Terminal side of male terminals

Is there continuity?

YES—Go to step 21.

NO—Repair an open in the wire between active noise control unit 16P connector terminal No. 3 and active noise cancellation front microphone connector A (2P) terminal No. 2.■

21. Check for continuity between active noise cancellation unit 16P connector terminal No. 11 and active noise cancellation front microphone connector A (2P) terminal No. 1.

ACTIVE NOISE CANCELLATION UNIT 16P CONNECTOR
Wire side of female terminals

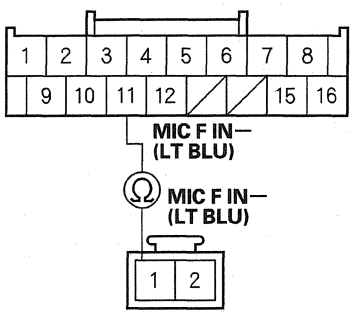

ACTIVE NOISE CANCELLATION FRONT MICROPHONE CONNECTOR A (2P)
Terminal side of male terminals

Is there continuity?

YES—Go to step 22.

NO—Repair an open in the wire between active noise cancellation unit 16P connector terminal No. 11 and active noise cancellation front microphone connector A (2P) terminal No. 1.■

(cont'd)

Symptom Troubleshooting (cont'd)

22. Disconnect active noise cancellation rear microphone connector A (2P) and stereo amplifier connector C (23P).

23. Check for continuity between active noise cancellation unit 16P connector terminal No. 4 and active noise cancellation rear microphone connector A (2P) terminal No. 2.

ACTIVE NOISE CANCELLATION UNIT 16P CONNECTOR
Wire side of female terminals

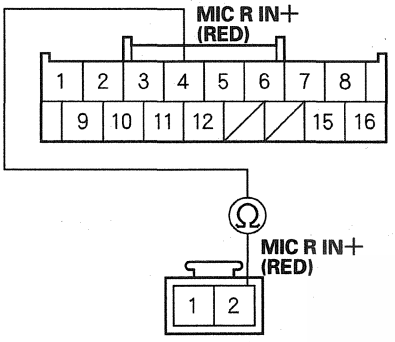

ACTIVE NOISE CANCELLATION REAR MICROPHONE CONNECTOR A (2P)
Terminal side of male terminals

Is there continuity?

YES—Go to step 24.

NO—Repair an open in the wire between active noise cancellation unit 16P connector terminal No. 4 and active noise cancellation front microphone connector A (2P) terminal No. 2. ■

24. Check for continuity between active noise cancellation unit 16P connector terminal No. 5 and active noise cancellation rear microphone connector A (2P) terminal No. 1.

ACTIVE NOISE CANCELLATION UNIT 16P CONNECTOR
Wire side of female terminals

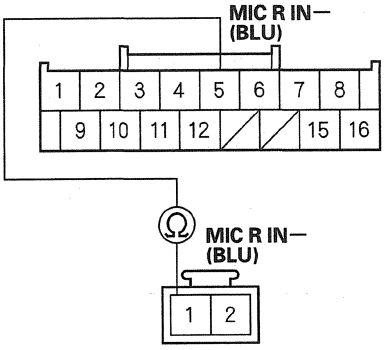

ACTIVE NOISE CANCELLATION REAR MICROPHONE CONNECTOR A (2P)
Terminal side of male terminals

Is there continuity?

YES—Replace the active noise cancellation unit (see page 23-113). ■

NO—Repair an open in the wire between active noise cancellation unit 16P connector terminal No. 5 and active noise cancellation rear microphone connector A (2P) terminal No. 1. ■

25. Check the No. 5 (7.5 A) fuse in the driver's under-dash fuse/relay box.

Is the fuse OK?

YES—Go to step 26.

NO—Replace the fuse, and recheck. ■

26. Measure the voltage between active noise cancellation unit 16P connector terminal No. 8 and body ground.

ACTIVE NOISE CANCELLATION UNIT 16P CONNECTOR

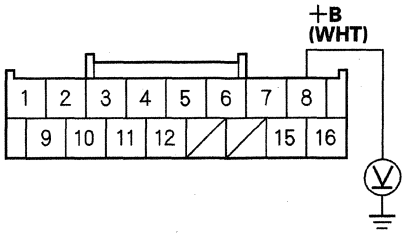

Wire side of female terminals

Is there battery voltage?

YES—Go to step 27.

NO—Repair an open in the wire between the No. 5 (7.5 A) fuse in the driver's under-dash fuse/relay box and the active noise cancellation unit 16P connector terminal No. 8. ■

27. Measure the voltage between active noise cancellation unit 16P connector terminal No. 7 and body ground.

ACTIVE NOISE CANCELLATION UNIT 16P CONNECTOR

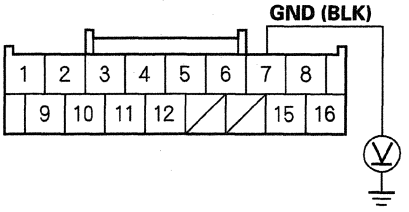

Wire side of female terminals

Is there less than 0.2 V?

YES—Go to step 28.

NO—Repair an open in the wire between active noise cancellation unit 16P connector terminal No. 7 and body ground (G652) (see page 22-46). ■

28. Do the active noise cancellation (ANC) self-diagnostic function (see page 23-41).

29. Press the No. 1 button.

30. Disconnect the active noise cancellation unit 16P connector.

(cont'd)

Symptom Troubleshooting (cont'd)

31. Measure the voltage between active noise cancellation unit 16P connector terminal No. 12 and body ground.

ACTIVE NOISE CANCELLATION UNIT 16P CONNECTOR

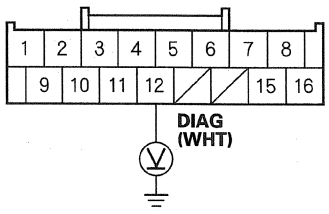

Wire side of female terminals

Is there about 5 V?

YES—Go to step 36.

NO—Go to step 32.

32. Turn the ignition switch to LOCK (0).

33. Disconnect stereo amplifier connector A (26P).

34. Check for continuity between active noise cancellation unit 16P connector terminal No. 12 and stereo amplifier connector A (26P) terminal No. 18.

ACTIVE NOISE CANCELLATION UNIT 16P CONNECTOR
Wire side of female terminals

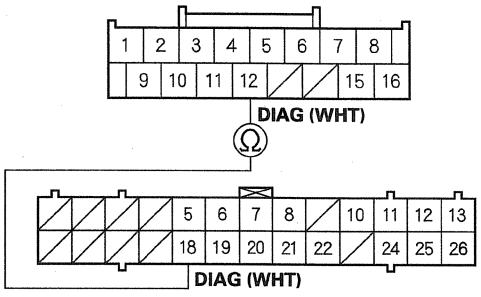

STEREO AMPLIFIER CONNECTOR A (26P)
Wire side of female terminals

Is there continuity?

YES—Go to step 35.

NO—Repair an open in the wire between active noise cancellation unit 16P connector terminal No. 12 and stereo amplifier connector A (26P) terminal No. 18. ■

35. Check for continuity between body ground and active noise cancellation unit 16P connector terminal No. 12.

ACTIVE NOISE CANCELLATION UNIT 16P CONNECTOR

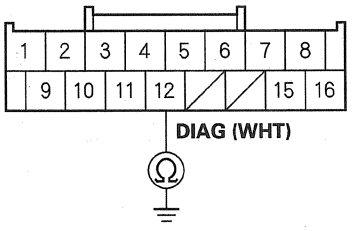

Wire side of female terminals

Is there continuity?

YES—Repair a short in the wire between active noise cancellation unit 16P connector terminal No. 12 and stereo amplifier connector A (26P) terminal No. 18. ■

NO—Replace the stereo amplifier (see page 23-111). ■

36. Reconnect the active noise cancellation unit (16P) connector.

37. Do the active noise cancellation (ANC) self-diagnostic function (see page 23-41).

38. Press and release the No. 1 button.

39. Measure the voltage between active noise cancellation unit 16P connector terminal No. 2 and body ground.

ACTIVE NOISE CANCELLATION UNIT 16P CONNECTOR

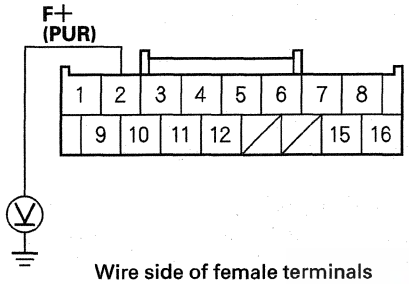

Wire side of female terminals

Is there about 2.5 V?

YES—Replace the stereo amplifier (see page 23-111). ■

NO—Go to step 40.

40. Turn the ignition switch to LOCK (0).

41. Disconnect the active noise cancellation unit 16P connector and stereo amplifier connector C (23P).

42. Check for continuity between the active noise cancellation unit 16P connector and stereo amplifier connector C (23P) according to the table.

Active noise cancellation unit connector	Stereo amplifier connector	Wire color
No. 1	C16	PNK
No. 2	C14	PUR
No. 9	C17	GRN
No. 10	C15	ORN

ACTIVE NOISE CANCELLATION UNIT 16P CONNECTOR

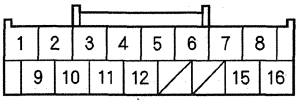

Wire side of female terminals

STEREO AMPLIFIER CONNECTOR C (23P)

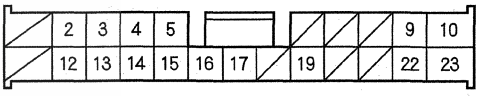

Wire side of female terminals

Is there continuity?

YES—Go to step 43.

NO—Repair an open in the wire(s) between the active noise cancellation unit 16P connector and stereo amplifier connector C (14P). ■

(cont'd)

Symptom Troubleshooting (cont'd)

43. Check for continuity between body ground and active noise cancellation unit 16P connector terminals No. 1, 2, 9, and 10 individually.

ACTIVE NOISE CANCELLATION UNIT 16P CONNECTOR

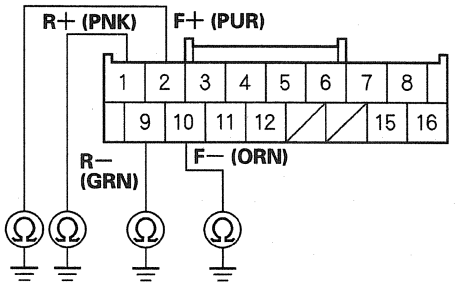

Wire side of female terminals

Is there continuity?

YES—Repair a short in the wire(s) between the active noise cancellation unit 16P connector and stereo amplifier connector C (14P). ■

NO—Replace the active noise cancellation unit (see page 23-113). ■

44. Start the engine, and let the vehicle idle.

45. Do the active noise cancellation (ANC) self-diagnostic function (see page 23-41).

46. Press the No. 1 button.

Can you hear the low-frequency hum?

YES—Go to step 47.

NO—The system is OK. ■

47. Turn the ignition switch to LOCK (0).

48. Disconnect the active noise cancellation unit 16P connector and PCM connector A (31P).

49. Check for continuity between active noise cancellation unit 16P connector terminal No. 15 and PCM connector A (31P) terminal No. 23.

ACTIVE NOISE CANCELLATION UNIT 16P CONNECTOR
Wire side of female terminals

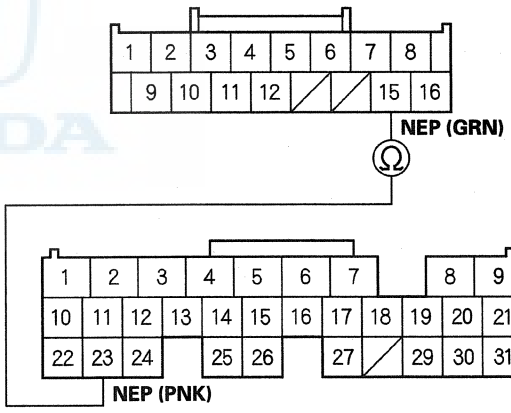

PCM CONNECTOR A (31P)
Wire side of female terminals

Is there continuity?

YES—Go to step 50.

NO—Repair an open in the wire between active noise cancellation unit 16P connector terminal No. 15 and PCM connector A (31P) terminal No. 23. ■

50. Check for continuity between active noise cancellation unit 16P connector terminal No. 15 and body ground.

ACTIVE NOISE CANCELLATION UNIT 16P CONNECTOR

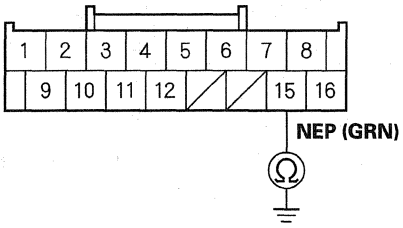

Wire side of female terminals

Is there continuity?

YES—Repair a short in the wire between body ground and active noise cancellation unit 16P connector terminal No. 15 and PCM connector A (31P) terminal No. 23. ■

NO—Replace the PCM. ■

USB device does not function

NOTE:
- Check the vehicle battery condition first (see page 22-90).
- Check the connectors for poor connections or loose terminals.
- Make sure you have the client's USB device to use for testing.
- Some music players (connected through the USB port) may not work with all models.
- Make sure that the music player connected to the USB port works properly.
- The USB memory used for testing should conform to the USB mass storage class standard.
- The USB function is not compatible with a USB memory of 128 MB or below.
- The music must be saved to the player as WMA (Windows Media Audio) files or MP3. MP3 files saved in a variable bit rate are not compatible.

1. Connect a known-good music player to the USB port.

2. Turn the ignition switch to ON (II).

3. Press the AUX button, and check if it changes to USB mode.

   Does it change to the USB mode?

   YES—Go to step 4.

   NO—Go to step 13.

4. Check that the client's USB memory device functions properly when connected to a known-good vehicle.

   Does the music on the USB play?

   YES—Go to step 5.

   NO—The music player is either defective or incompatible. ■

(cont'd)

Symptom Troubleshooting (cont'd)

5. Return to the client's vehicle with the client's USB and check if NO DATA appears when the music player is connected to the USB port.

   Does NO DATA appear?

   YES—Go to step 6.

   NO—Go to step 9.

6. Check the connectors at USB adapter unit connector B (5P) and the USB adapter cable and the USB jack.

   Are the connectors and terminals connected properly?

   YES—Go to step 7.

   NO—Repair the connection, and recheck.■

7. Disconnect USB adapter unit connector B (5P).

8. Check for continuity between USB adapter unit connector B (5P), and the USB jack according to the table.

	USB adapter unit connector	USB jack
USB VBUS	B1	No. 1
USB DATA−	B2	No. 2
USB DATA+	B3	No. 3
USB GND	B4	No. 4
USB SH	B5	No. 5

USB ADAPTER UNIT CONNECTOR B (5P)

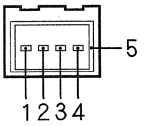

Terminal side of female terminals

USB JACK

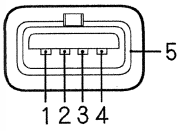

Terminal side of female terminals

Is there continuity?

YES—Replace the USB adapter unit (see page 23-114) or the USB jack (see page 23-114).■

NO—There is an open in the wire(s) between the USB adapter unit and the USB jack. Replace the affected shielded harness.■

9. Turn on the audio unit, and check for sound in each mode (AM, FM, XM, and CD).

   Is the sound normal?

   YES—Go to step 10.

   NO—Go to no sound is heard from the speaker(s) (see page 23-49).■

10. Turn the ignition switch to ON (II).

11. Disconnect USB adapter unit connector A (14P) and audio unit connector C (14P).

12. Check for continuity between USB adapter unit connector A (14P) and audio unit connector C (14P) according to the table.

	USB adapter unit connector	Audio unit connector	Wire color
AUDIO R+	A5	C5	GRN
AUDIO R−	A13	C13	BLK
AUDIO L+	A6	C6	WHT
AUDIO L−	A14	C14	RED

USB ADAPTER UNIT CONNECTOR A (14P)

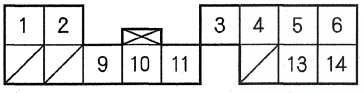

Wire side of female terminals

AUDIO UNIT CONNECTOR C (14P)

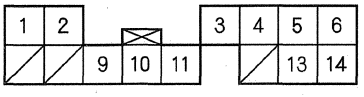

Wire side of female terminals

Is there continuity?

YES—Replace the USB adapter unit (see page 23-114). ■

NO—There is an open in the wire(s) between the USB adapter connector and the audio unit connector. Replace the affected shielded harness. ■

13. Measure the voltage between USB adapter unit connector A (14P) terminals No. 1 and No. 11.

USB ADAPTER UNIT CONNECTOR A (14P)

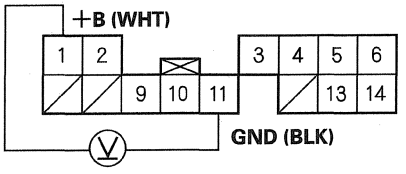

Wire side of female terminals

Is there battery voltage?

YES—Go to step 14.

NO—Go to step 26.

(cont'd)

Symptom Troubleshooting (cont'd)

14. Turn the ignition switch to LOCK (0).

15. Disconnect USB adapter unit connector A (14P), navigation display unit 20P connector, HandsFreeLink control unit 28P connector, AcuraLink control unit connector A (32P), and XM receiver unit connector A (14P).

16. Check for continuity between USB adapter unit connector A (14P) and the navigation display unit 20P connector according to the table.

	USB adapter unit connector	Navigation display unit connector	Wire color
GA-NET BUS+	A9	No. 5	RED
GA-NET BUS−	A10	No. 15	GRN

USB ADAPTER UNIT CONNECTOR A (14P)

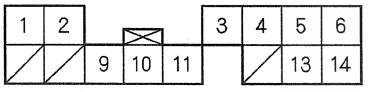

Wire side of female terminals

NAVIGATION DISPLAY UNIT 20P CONNECTOR

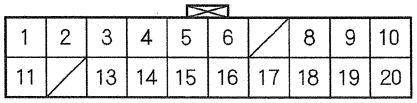

Wire side of female terminals

Is there continuity?

YES—Go to step 17.

NO—There is an open or short in the wire(s) between the USB adapter unit and the navigation display unit. Replace the affected shielded harness. ■

17. Check for continuity between body ground and USB adapter unit connector A (14P) terminals No. 9 and No. 10 individually.

USB ADAPTER UNIT CONNECTOR A (14P)

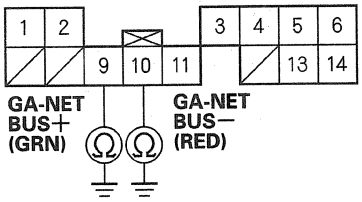

Wire side of female terminals

Is there continuity?

YES—There is a short in the wire(s) between USB adapter connector A (14P) and body ground. Replace the affected shielded harness. ■

NO—Go to step 18.

18. Check for continuity between terminals of USB adapter unit connector A (14P) according to the table.

From terminal	To terminals
A3 (GRY)	A9 (GRN), A10 (RED)

USB ADAPTER UNIT CONNECTOR A (14P)

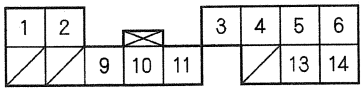

Wire side of female terminals

Is there continuity?

YES—There is a short in the wire(s) between the USB adapter unit and the navigation display unit. Replace the affected shielded harness. ■

NO—Go to step 19.

19. Turn the ignition switch to LOCK (0).

20. Disconnect USB adapter unit connector A (14P), and the navigation display unit 20P connector.

21. Check for continuity between audio unit connector C (14P) and the navigation display unit 20P connector according to the table.

	Audio unit connector	Navigation display unit connector	Wire color
GA-NET BUS+	C9	No. 3	GRN
GA-NET BUS−	C10	No. 13	RED

AUDIO UNIT CONNECTOR C (14P)

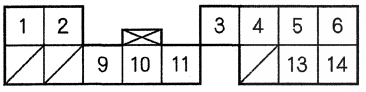

Wire side of female terminals

NAVIGATION DISPLAY UNIT 20P CONNECTOR

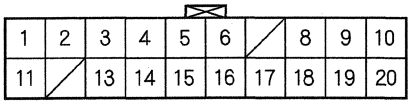

Wire side of female terminals

Is there continuity?

YES—Go to step 22.

NO—There is an open or short in the wire(s) between the audio unit and the navigation display unit. Replace the affected shielded harness. ■

22. Check for continuity between body ground and audio unit connector C (14P) terminals No. 9 and No. 10 individually.

AUDIO UNIT CONNECTOR C (14P)

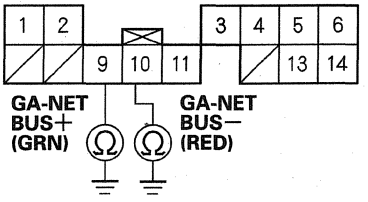

Wire side of female terminals

Is there continuity?

YES—There is a short in the wire(s) between audio unit connector C (14P) and body ground. Replace the affected shielded harness. ■

NO—Go to step 23.

23. Check for continuity between terminals of audio unit connector C (14P) according to the table.

From terminal	To terminals
C3 (GRY)	C9 (GRN), C10

AUDIO UNIT CONNECTOR C (14P)

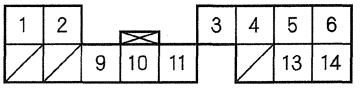

Wire side of female terminals

Is there continuity?

YES—There is a short in the wire(s) between the audio unit and navigation display unit. Replace the affected shielded harness. ■

NO—Go to step 24.

(cont'd)

Symptom Troubleshooting (cont'd)

24. Turn on the audio unit, and check for sound in each mode (AM, FM, XM, and CD).

    Is the sound normal?

    YES—Replace the USB adapter unit (see page 23-114). ■

    NO—Replace the audio unit (see page 23-106). ■

25. Turn the ignition switch to LOCK (0).

26. Disconnect USB adapter unit connector A (14P) and audio unit connector C (14P) [and XM receiver connector A (14P)] .

    [ ] : With XM receiver

27. Check for continuity between USB adapter unit connector A (14P) and audio unit connector C (14P) according to the table.

	USB adapter unit connector	Audio unit connector	Wire color
+B	A1	C1	WHT
SYS ON	A2	C2	PUR
GND	A11	C11	BLK

USB ADAPTER UNIT CONNECTOR A (14P)

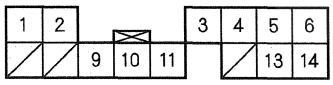

Wire side of female terminals

AUDIO UNIT CONNECTOR C (14P)

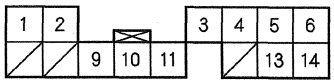

Wire side of female terminals

Is there continuity?

YES—Go to step 28.

NO—Repair an open in the wire(s) between the USB adapter unit and the audio unit. ■

28. Reconnect audio unit connector C (14P).

29. Turn the ignition switch to ON (II).

30. Measure the voltage between body ground and USB adapter unit connector A (14P) terminals No. 1 and No. 2 individually.

USB ADAPTER UNIT CONNECTOR A (14P)

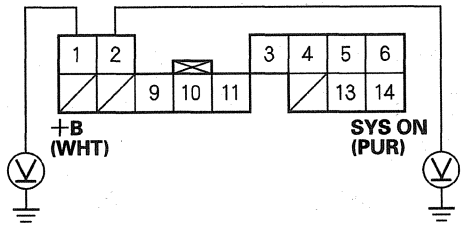

Wire side of female terminals

Is there battery voltage?

YES—Go to step 31.

NO—Repair an open in the wire(s) between the USB adapter unit and the audio unit. ■

31. Turn the ignition switch to LOCK (0).

32. Reconnect USB adapter unit connector A (14P).

33. Turn the ignition switch to ON (II).

34. Measure the voltage between USB adapter unit connector A (14P) terminal No. 11 and body ground.

USB ADAPTER UNIT CONNECTOR A (14P)

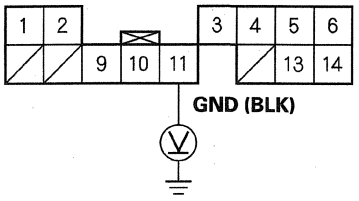

Wire side of female terminals

Is there less than 0.2 V?

YES—Check pin fit and connection, then substitute a known-good audio unit (see page 23-106), and recheck. If the symptom/indication goes away, replace the original audio unit (see page 23-106). If the symptom is still present, substitute a known-good USB adapter unit (see page 23-114), and recheck. If the symptom/indication goes away, replace the original USB adapter unit (see page 23-114). ■

NO—Repair an open in the wire between the USB adapter unit and the audio unit. ■

There is no sound from the left speaker when the USB device is connected

NOTE:
- Check the vehicle battery condition first (see page 22-90).
- Check the connectors for poor connections or loose terminals.

1. Turn the ignition switch to ON (II).

2. Check the sound output in AM/FM and CD modes.

   Is the sound normal?

   YES—Go to step 3.

   NO—Go to no sound is heard from the speaker(s) (see page 23-49). ■

3. Measure the voltage between body ground and USB adapter unit connector A (14P) terminals No. 1 and No. 2 and individually.

USB ADAPTER UNIT CONNECTOR A (14P)

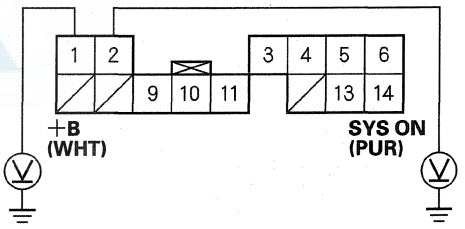

Wire side of female terminals

Is there battery voltage?

YES—Go to step 4.

NO—Repair an open in the wire(s) between the USB adapter unit and the audio unit. ■

(cont'd)

Symptom Troubleshooting (cont'd)

4. Measure the voltage between USB adapter unit connector A (14P) terminal No. 11 and body ground.

USB ADAPTER UNIT CONNECTOR A (14P)

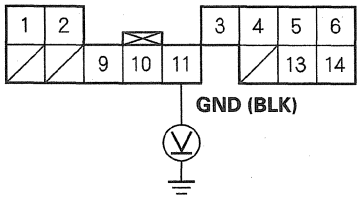

Wire side of female terminals

Is there less than 0.2 V?

YES—Go to step 5.

NO—Repair an open in the wire(s) between the USB adapter unit and the audio unit.■

5. Turn the ignition switch to LOCK (0).

6. Disconnect USB adapter unit connector A (14P) and audio unit connector C (14P).

7. Check for continuity between terminals of USB adapter unit connector A (14P) and body ground according to the table. Then check for continuity between the same terminals listed in the table and USB adapter unit connector A (14P) terminal No. 4 (The harness shield).

	USB adapter unit connector	Wire color
Audio L+	A6	WHT
Audio L−	A14	RED

USB ADAPTER UNIT CONNECTOR A (14P)

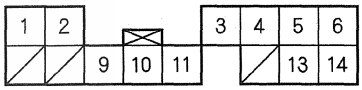

Wire side of female terminals

Is there continuity?

YES—There is a short in the wire(s) between the USB adapter unit and the audio unit. Replace the affected shielded harness.

NO—Go to step 8.

8. Check for continuity between USB adapter unit connector A (14P) and audio unit connector C (14P) according to the table.

	USB adapter unit connector	Audio unit connector	Wire color
AUDIO L+	A6	C6	WHT
AUDIO L−	A14	C14	RED

USB ADAPTER UNIT CONNECTOR A (14P)

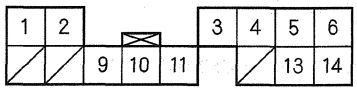

Wire side of female terminals

AUDIO UNIT CONNECTOR C (14P)

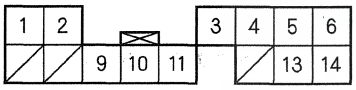

Wire side of female terminals

Is there continuity?

YES—Replace the USB adapter unit (see page 23-114). ■

NO—There is an open in the wire(s) between the USB adapter unit and the audio unit. Replace the affected shielded harness. ■

There is no sound from the right speaker when the USB device is connected

NOTE:
- Check the vehicle battery condition first (see page 22-90).
- Check the connectors for poor connections or loose terminals.

1. Turn the ignition switch to ON (II).

2. Check the sound output in AM/FM and CD modes.

   Is the sound normal?

   YES—Go to step 3.

   NO—Go to no sound is heard from the speaker(s) (see page 23-49).

3. Measure the voltage between body ground and USB adapter unit connector A (14P) terminal No. 1 and No. 2 individually.

USB ADAPTER UNIT CONNECTOR A (14P)

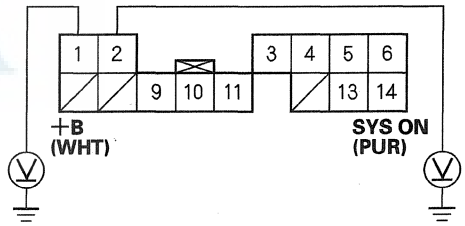

Wire side of female terminals

Is there battery voltage?

YES—Go to step 4.

NO—Repair an open in the wire(s) between the USB adapter unit and the audio unit. ■

(cont'd)

Symptom Troubleshooting (cont'd)

4. Measure the voltage between USB adapter unit connector A (14P) terminal No. 11 and body ground.

USB ADAPTER UNIT CONNECTOR A (14P)

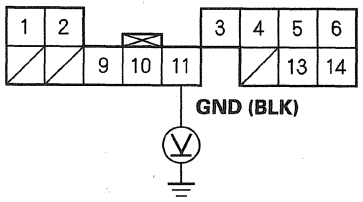

Wire side of female terminals

Is there than 0.2 V?

YES—Go to step 5.

NO—Repair an open in the wire(s) between the USB adapter unit and the audio unit. ■

5. Turn the ignition switch to LOCK (0).

6. Disconnect USB adapter unit connector A (14P) and audio unit connector C (14P).

7. Check for continuity between terminals of USB adapter unit connector A (14P) and body ground according to the table. Then check for continuity between the same terminals listed in the table and USB adapter unit connector A (14P) terminal No. 4 (The harness shield).

	USB adapter unit connector	Wire color
Audio L+	A5	GRN
Audio L−	A13	BLK

USB ADAPTER UNIT CONNECTOR A (14P)

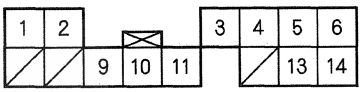

Wire side of female terminals

Is there continuity?

YES—There is a short in the wire(s) between the USB adapter unit and the audio unit. Replace the affected shielded harness. ■

NO—Go to step 8.

8. Check for continuity between USB adapter unit connector A (14P) and audio unit connector C (14P) according to the table.

	USB adapter unit connector	Audio unit connector	Wire color
AUDIO R+	A5	C5	GRN
AUDIO R−	A13	C13	BLK

USB ADAPTER UNIT CONNECTOR A (14P)

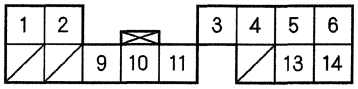

Wire side of female terminals

AUDIO UNIT CONNECTOR C (14P)

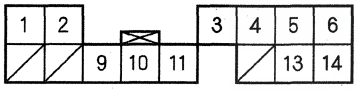

Wire side of female terminals

Is there continuity?

YES—Replace the USB adapter unit (see page 23-114). ■

NO—There is an open in the wire(s) between the USB adapter unit and the audio unit. Replace the affected shielded harness. ■

Error code: XM NO SIGNAL is displayed

NOTE:
- Check the vehicle battery condition first (see page 22-90).
- Check the connectors for poor connection or loose terminals.

1. Park the vehicle outside with a clear view of the southern horizon.
2. Turn the ignition switch to ON (II).
3. Turn on the audio unit, and select XM radio.

   Does the XM radio receive a signal?

   YES—Reception interference operation is normal. ■

   NO—
   - With AcuraLink: Go to step 4.
   - Without AcuraLink: Go to step 10.
4. Turn the ignition switch to LOCK (0).
5. Check the XM antenna 2P connector and AcuraLink control unit (XM receiver) connector B (2P).

   Are the connectors connected?

   YES—Go to step 6.

   NO—Reconnect the XM antenna 2P connector and AcuraLink control unit connector B (2P) connector, and recheck XM radio operation. If the signal is restored, the system is OK. If the signal is not restored go to step 3.

(cont'd)

Symptom Troubleshooting (cont'd)

6. Turn the ignition switch to ON (II).

7. Measure the voltage between AcuraLink control unit (XM receiver) connector A (32P) terminal No. 1 and body ground.

ACURALINK CONTROL UNIT (XM RECEIVER) CONNECTOR A (32P)

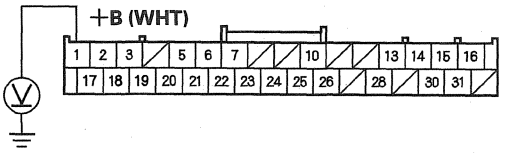

Wire side of female terminals

Is there battery voltage?

YES—Go to step 8.

NO—Repair an open in the wire between the No. 5 (7.5 A) fuse in the driver's under-dash fuse/relay box and AcuraLink control unit (XM receiver) connector A (32P) terminal No. 1.■

8. Measure the voltage between body ground and AcuraLink control unit (XM receiver) connector A (32P) terminals No. 2 and No. 3 individually.

ACURALINK CONTROL UNIT (XM RECEIVER) CONNECTOR A (32P)

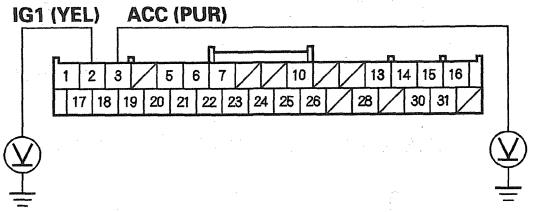

Wire side of female terminals

Is there battery voltage?

YES—Go to step 9.

NO—Repair an open in the wire between the No. 32 (10 A) or the No. 21 (10 A) fuse in the driver's under-dash fuse/relay box and XM receiver connector A (32P) terminals No. 2 and No.3.■

9. Measure the voltage between AcuraLink control unit (XM receiver) connector A (32P) terminal No. 28 and body ground.

ACURALINK CONTROL UNIT (XM RECEIVER) CONNECTOR A (32P)

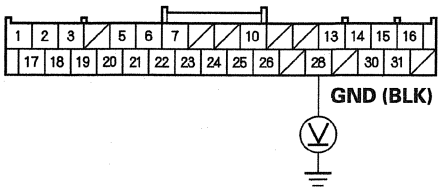

Wire side of female terminals

Is there less than 0.2 V?

YES—Go to step 10.

NO—Repair an open in the wire between AcuraLink control unit (XM receiver) connector A (32P) terminal No. 28 and body ground (G602) (see page 22-42).■

10. Substitute known-good XM antenna.

Does the XM radio receive a signal?

YES—Replace the XM antenna (see page 23-116).■

NO—Substitute a known-good XM antenna lead. If the AcuraLink control unit (XM receiver) receives a signal, replace the original XM antenna lead. If the AcuraLink control unit (XM receiver) does not receive a signal, substitute a known-good AcuraLink control unit (XM receiver) (see page 23-111).■

11. Turn the ignition switch to LOCK (0).

12. Check the connection at XM antenna connector B (2P) and XM receiver connector B (2P).

Are the connectors connected?

YES—Go to step 13.

NO—Reconnect the connectors, and recheck the XM radio operation. If the signal is restored, the system is OK. If the signal is not restored go to step 10.

13. Turn the ignition switch to ON (II).

14. Measure the voltage between XM receiver connector A (14P) terminal No. 1 and body ground.

XM RECEIVER CONNECTOR A (14P)

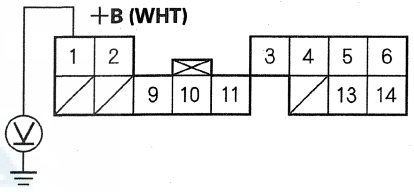

Wire side of female terminals

Is there battery voltage?

YES—Go to step 15.

NO—Repair an open in the wire between audio unit connector C (14P) terminal No. 1 and XM receiver connector A (14P) terminal No. 1.■

(cont'd)

Symptom Troubleshooting (cont'd)

15. Measure the voltage between XM receiver connector A (14P) terminal No. 2 and body ground.

XM RECEIVER CONNECTOR A (14P)

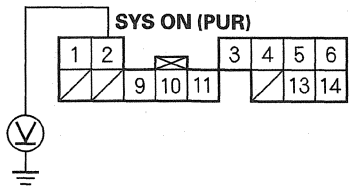

Wire side of female terminals

Is there less than 0.2 V?

YES—Go to step 16.

NO—Repair an open in the wire between audio unit connector E (14P) terminal No. 11 and USB adapter unit connector A (14P) terminal No. 11 and XM receiver connector A (14P) terminal No. 11. ■

16. Measure the voltage between XM receiver connector A (14P) terminal No. 11 and body ground.

XM RECEIVER CONNECTOR A (14P)

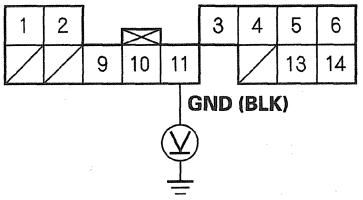

Wire side of female terminals

Is there less than 0.2 V?

YES—Go to step 17.

NO—Repair an open in the wire between audio unit connector C (14P) terminal No. 11 and XM receiver connector A (14P) terminal No. 11. ■

17. Substitute a known-good XM antenna.

Does the XM radio receive signal?

YES—Replace the XM antenna (see page 23-116). ■

NO—Substitute a known-good XM antenna lead. If the XM receiver receives signal, replace the original XM antenna lead. If the XM receiver does not receive a signal, substitute a known-good XM receiver (see page 23-112). ■

Error code: XM ANTENNA is displayed

NOTE:
- Check the vehicle battery condition first (see page 22-90).
- Check the connectors for poor connections or loose terminals.
- If you replace the AcuraLink control unit (XM receiver), the AcuraLink must be reactivated by Acura Client Services.

[ ] : Without AcuraLink

1. Check the connector at the AcuraLink control unit (XM receiver) [or XM receiver] .

   Is the connector connected?

   YES—Go to step 2.

   NO—Reconnect the connector(s). If the error message does not go away, go to step 2.

2. Check the connector at the XM terrestrial and satellite antenna module (GPS antenna).

   Is the connector connected?

   YES—Go to step 3.

   NO—Reconnect the connector(s). If the error message does not go away, go to step 3.

3. Check the pin locations in the AcuraLink control unit (XM receiver) [or XM receiver] connector and the XM antenna module connectors.

   Are the pins in the correct locations?

   YES—Go to step 4.

   NO—Correct the pin locations. If the error message does not go away, go to step 4.

4. Substitute a known-good XM terrestrial and satellite antenna module.

   Is the error message gone?

   YES—Replace the XM terrestrial and satellite antenna module. ■

   NO—Go to step 5.

5. Substitute a known-good AcuraLink control unit (XM receiver) [or XM receiver] .

   Is the error message gone?

   YES—Update the AcuraLink control unit if it does not have the latest software, then recheck. If the software is the latest, replace the AcuraLink control unit (see page 23-111) [or XM receiver (see page 23-112)] . ■

   NO—Replace the XM antenna lead. ■

Symptom Troubleshooting (cont'd)

XM radio display is blank and no station information is displayed (with AcuraLink)

NOTE:
- Check the vehicle battery condition first (see page 22-90).
- Check the connectors for poor connections or loose terminals.
- If you replace the XM receiver, the AcuraLink must be reactivated by Acura Client Services.

1. Turn the ignition switch to ON (II).

2. Measure the voltage between AcuraLink control unit (XM receiver) connector A (32P) terminal No. 1 and body ground.

ACURALINK CONTROL UNIT (XM RECEIVER) CONNECTOR A (32P)

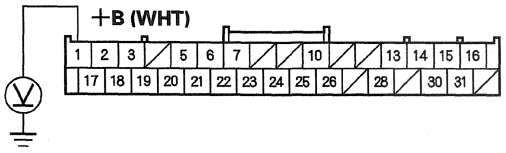

Wire side of female terminals

Is there battery voltage?

YES—Go to step 3.

NO—Repair an open in the wire between the No. 5 (7.5 A) fuse in the driver's under-dash fuse/relay box and XM receiver connector A (32P) terminal No. 1.■

3. Measure the voltage between AcuraLink control unit (XM receiver) connector A (32P) terminal No. 3 and body ground.

ACURALINK CONTROL UNIT (XM RECEIVER) CONNECTOR A (32P)

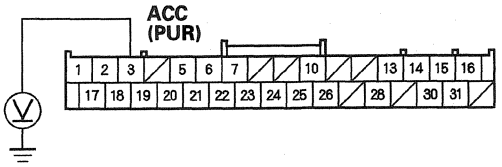

Wire side of female terminals

Is there battery voltage?

YES—Go to step 4.

NO—Repair an open in the wire between the No. 32 (10 A) fuse in the driver's under-dash fuse/relay box and AcuraLink control unit (XM receiver) connector A (32P) terminal No. 3.■

4. Measure the voltage between AcuraLink control unit (XM receiver) connector A (32P) terminal No. 2 and body ground.

ACURALINK CONTROL UNIT (XM RECEIVER) CONNECTOR A (32P)

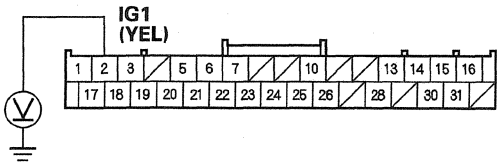

Wire side of female terminals

Is there battery voltage?

YES—Go to step 5.

NO—Repair open in the wire between the No. 21 (10 A) fuse in the driver's under-dash fuse/relay box and AcuraLink control unit (XM receiver) connector A (32P) terminal No. 2. ■

5. Measure the voltage between AcuraLink control unit (XM receiver) connector A (32P) terminal No. 28 and body ground.

ACURALINK CONTROL UNIT (XM RECEIVER) CONNECTOR A (32P)

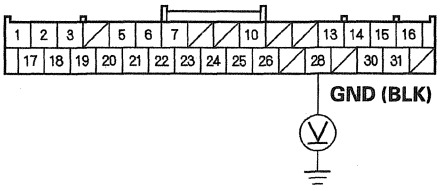

Wire side of female terminals

Is there less than 0.2 V?

YES—Go to step 6.

NO—Repair open in the wire between AcuraLink control unit (XM receiver) connector A (32P) terminal No. 28 and body ground (G602) (see page 22-42). ■

6. Turn the ignition switch to LOCK (0).

(cont'd)

Symptom Troubleshooting (cont'd)

7. Disconnect AcuraLink control unit (XM receiver) connector A (32P), navigation display unit 20P connector, HandsFreeLink control unit 28P connector, UBS adapter unit connector A (14P), and navigation unit connector B (32P).

8. Check for continuity between AcuraLink control unit (XM receiver) connector A (32P) and body ground according to the table. Then check for continuity between the same terminals listed in the table and the navigation display unit 20P connector terminal No. 14 (the harness shield).

AcuraLink control unit (XM receiver) connector	Wire color
A30	GRN
A31	RED

ACURALINK CONTROL UNIT (XM RECEIVER) CONNECTOR A (32P)

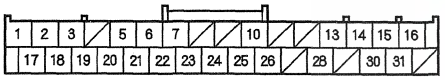

Wire side of female terminals

Is there continuity?

YES—There is a short in the wire(s) between the audio unit and the AcuraLink control unit (XM receiver). Replace the affected shielded harness. ■

NO—Go to step 9.

9. Check for continuity between AcuraLink control unit (XM receiver) connector A (32P) and USB adapter unit connector A (14P) according to the table.

AcuraLink control unit (XM receiver) connector	USB adapter unit connector	Wire color
A30	A9	GRN
A31	A10	RED

ACURALINK CONTROL UNIT (XM RECEIVER) CONNECTOR A (32P)

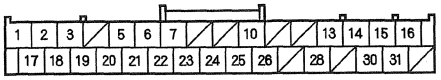

Wire side of female terminals

USB ADAPTER UNIT CONNECTOR A (14P)

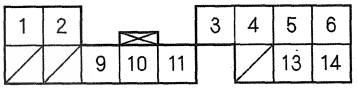

Wire side of female terminals

Is there continuity?

YES—Go to step 10.

NO—There is an open in the wire(s) between the audio unit and the AcuraLink control unit (XM receiver). Replace the affected shielded harness. ■

10. Check for continuity between AcuraLink control unit (XM receiver) connector A (32P) and the navigation display unit 20P connector according to the table.

AcuraLink control unit (XM receiver) connector	Navigation display unit connector	Wire color
A30	5	GRN
A31	15	RED

ACURALINK CONTROL UNIT (XM RECEIVER) CONNECTOR A (32P)

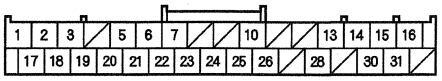

Wire side of female terminals

NAVIGATION DISPLAY UNIT 20P CONNECTOR

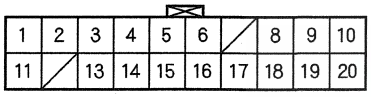

Wire side of female terminals

Is there continuity?

YES—Go to step 11.

NO—There is an open in the wire(s) between the navigation display unit and the AcuraLink control unit (XM receiver). Replace the affected shielded harness. ■

11. Check for continuity between AcuraLink control unit (XM receiver) connector A (32P) and HandsFreeLink control unit 28P connector according to the table.

AcuraLink control unit (XM receiver) connector	HandsFreeLink control unit connector	Wire color
A30	4	GRN
A31	5	RED

ACURALINK CONTROL UNIT (XM RECEIVER) CONNECTOR A (32P)

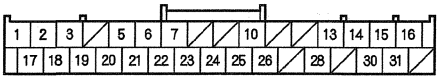

Wire side of female terminals

HANDSFREELINK CONTROL UNIT 28P CONNECTOR

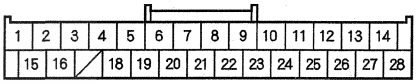

Wire side of female terminals

Is there continuity?

YES—Substitute a known-good AcuraLink control unit (XM receiver) (see page 23-111), then reconnect all of the connectors and recheck. If the symptom/indication goes away, update the AcuraLink control unit if it does not have the latest software, then recheck. If the software is the latest, replace the AcuraLink control unit (see page 23-111). If the symptom/indicated is still present replace the audio unit (see page 23-106). ■

NO—There is an open in the wire(s) between the HandsFreeLink control unit and the AcuraLink control unit (XM receiver). Replace the affected shielded harness. ■

Symptom Troubleshooting (cont'd)

XM radio display is blank and no station information is displayed (without AcuraLink)

NOTE:
- Check vehicle battery condition first (see page 22-90).
- Check the connectors for poor connections or loose terminals.

1. Disconnect XM receiver connector A (14P).
2. Turn the ignition switch to ON (II).
3. Measure the voltage between XM receiver connector A (14P) terminal No. 1 and body ground.

XM RECEIVER CONNECTOR A (14P)

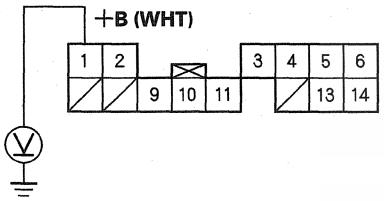

Wire side of female terminals

Is there battery voltage?

YES—Go to step 4.

NO—Repair an open in the wire between audio unit connector C (14P) terminal No. 1 and XM receiver connector A (14P) terminal No. 1.■

4. Measure the voltage between XM receiver connector A (14P) terminal No. 2 and body ground.

XM RECEIVER CONNECTOR A (14P)

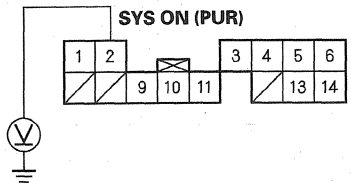

Wire side of female terminals

Is there battery voltage?

YES—Go to step 5.

NO—Repair an open in the wire between audio unit connector C (14P) No. 2 and XM receiver connector A (14P) terminal No. 2.■

5. Turn the ignition switch to LOCK (0).
6. Reconnect XM receiver connector A (14P).
7. Turn the ignition switch to ON (II).
8. Measure the voltage between XM receiver connector A (14P) terminal No. 11 and body ground.

XM RECEIVER CONNECTOR A (14P)

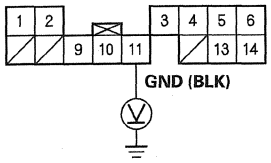

Wire side of female terminals

Is there less than 0.2 V?

YES—Go to step 9.

NO—Repair an open in the wire between audio unit connector C (14P) terminal No. 11 and XM receiver connector A (14P) terminal No. 11.■

9. Turn the ignition switch to LOCK (0).

10. Disconnect XM receiver connector A (14P), navigation display unit 20P connector, HandsFreeLink control unit 28P connector, USB adapter unit connector A (14P), and navigation unit connector B (32P).

11. Check for continuity between XM receiver connector A (14P) and body ground according to the table. Then check for continuity between the same terminals listed in the table and XM receiver connector A (14P) terminal No. 3 (the harness shield).

XM receiver connector	Wire color
A9	GRN
A10	RED

XM RECEIVER CONNECTOR A (14P)

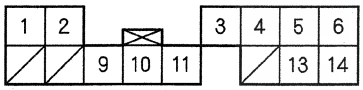

Wire side of female terminals

Is there continuity?

YES—There is a short in the wire(s) between the audio unit and the XM receiver. Replace the affected shielded harness.■

NO—Go to step 13.

12. Check for continuity between XM receiver connector A (14P) and the navigation display unit 20P connector according to the table.

XM receiver connector	Navigation display unit connector	Wire color
A9	5	GRN
A10	15	RED

XM RECEIVER CONNECTOR A (14P)

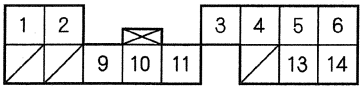

Wire side of female terminals

NAVIGATION DISPLAY UNIT 20P CONNECTOR

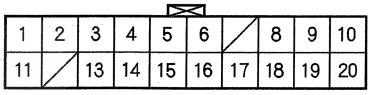

Wire side of female terminals

Is there continuity?

YES—Go to step 13.

NO—There is an open in the wire(s) between the navigation display unit and the XM receiver.■

(cont'd)

Symptom Troubleshooting (cont'd)

13. Check for continuity between XM receiver connector A (14P) and the HandsFreeLink control unit 28P connector according to the table.

XM receiver connector	HandsFreeLink control unit connector	Wire color
A9	4	GRN
A10	5	RED

XM RECEIVER CONNECTOR A (14P)

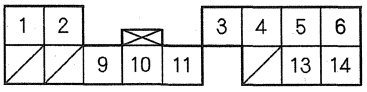

Wire side of female terminals

HANDSFREELINK CONTROL UNIT 28P CONNECTOR

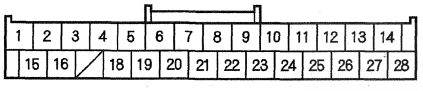

Wire side of female terminals

Is there continuity?

YES—Go to step 14.

NO—There is an open in the wire(s) between the HandsFreeLink control unit and the XM receiver. Replace the affected shielded harness. ■

14. Check for continuity between XM receiver connector A (14P) and USB adapter unit connector A (14P) according to the table.

XM receiver connector	USB adapter unit connector	Wire color
A9	A9	GRN
A10	A10	RED

XM RECEIVER CONNECTOR A (14P)

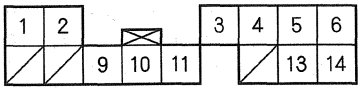

Wire side of female terminals

USB ADAPTER UNIT CONNECTOR A (14P)

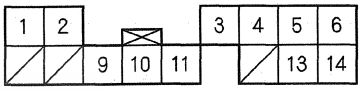

Wire side of female terminals

Is there continuity?

YES—Substitute a known-good XM receiver (see page 23-112), then reconnect all of the connectors, and recheck. If the symptom/indication goes away, replace the original XM receiver (see page 23-112). If the symptom/indication is still present replace the audio unit (see page 23-106). ■

NO—There is an open in the appropriate wire between the USB adapter unit and the XM receiver. Replace the affected shielded harness. ■

XM radio preset memory is lost (with AcuraLink)

NOTE:
- Check the vehicle battery condition first (see page 22-90).
- Check the connectors for poor connections or loose terminals.
- Check for an unlinked keyless remote.
- If you replace the AcuraLink control unit (XM receiver), the AcuraLink must be reactivated by Acura Client Services.
- If you can only tune to channel 000, 001, 174, and 247, make sure the audio unit is set to channel mode (see owners manual), if it is set to channel mode, call XM Satellite Radio client support, and check the account activation status.

1. Turn the ignition switch to ON (II).

2. Turn on the audio unit, and set each of the XM radio channel preset buttons.

   Do each of the XM radio channel preset buttons set properly?

   YES—Go to step 3.

   NO—Go to step 7.

3. Turn the ignition switch to LOCK (0) for 1 minute, then turn it back to ON (II).

4. Test all of the XM radio channel preset buttons for proper recall operation.

   Do the preset buttons recall the set radio stations?

   YES—System is normal at this time. Check connections at the audio unit.■

   NO—Go to step 5.

5. Turn the ignition switch to ON (II).

6. Measure the voltage between AcuraLink control unit (XM receiver) connector A (32P) terminal No. 1 and body ground.

ACURALINK CONTROL UNIT (XM RECEIVER) CONNECTOR A (32P)

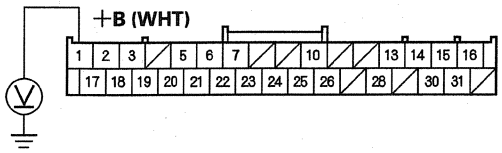

Wire side of female terminals

Is there battery voltage?

YES—Go to step 7.

NO—Repair an open in the wire between the No. 5 (7.5 A) fuse in the driver's under-dash fuse/relay box and AcuraLink control unit (XM receiver) connector A (32P) terminal No. 1.■

7. Measure the voltage between body ground and AcuraLink control unit (XM receiver) connector A (32P) terminals No. 2 and No. 3 individually.

ACURALINK CONTROL UNIT (XM RECEIVER) CONNECTOR A (32P)

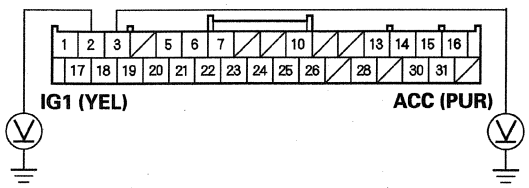

Wire side of female terminals

Is there battery voltage?

YES—Go to step 8.

NO—Repair an open in the wire between the No. 21 (10 A) fuse or the No. 32 (10 A) fuse in the driver's under-dash fuse/relay box and AcuraLink control unit (XM receiver) connector A (32P) terminals No. 2 and No. 3.■

(cont'd)

Symptom Troubleshooting (cont'd)

8. Measure the voltage between AcuraLink control unit (XM receiver) connector A (32P) No. 28 terminal and body ground.

ACURALINK CONTROL UNIT (XM RECEIVER) CONNECTOR A (32P)

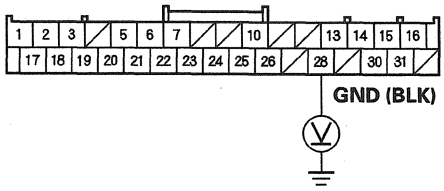

Wire side of female terminals

Is there less than 0.2 V?

YES—Substitute a known-good AcuraLink control unit (XM receiver) (see page 23-111), and recheck. If the symptom/indication goes away, replace the original AcuraLink control unit (XM receiver) (see page 23-111). ■

NO—Repair open in the wire between audio unit connector A (32P) terminal No. 28 and body ground (G602) (see page 22-42). ■

XM radio preset memory is lost (without AcuraLink)

NOTE:
- Check the vehicle battery condition first (see page 22-90).
- Check for an unlinked keyless remote.
- Check the connectors for poor connections or loose terminals.
- If you can only tune to channel 000, 001, 174, and 247, make sure the audio unit is set to channel mode (see owner's manual), if it is set to channel mode, call XM radio client support, and check the account activation status.

1. Turn the ignition switch to ON (II).

2. Turn on the audio unit, and set each of the XM radio channel preset buttons.

   Do each of the XM radio channel preset buttons set properly?

   YES—Go to step 3.

   NO—Go to step 7.

3. Turn the ignition switch to LOCK (0) for 1 minute, then turn it back to ON (II).

4. Test all of the XM radio channel preset buttons for proper recall operation.

   Do the preset buttons recall the set radio stations?

   YES—Intermittent failure, the system is normal at this time. Check connections at the audio unit. ■

   NO—Go to step 5.

5. Turn the ignition switch to LOCK (0).

6. Disconnect XM receiver connector A (14P)

7. Measure the voltage between XM receiver connector A (14P) terminal No. 1 and body ground.

XM RECEIVER CONNECTOR A (14P)

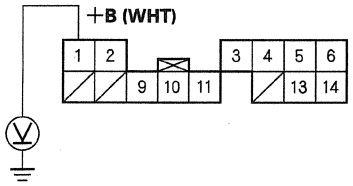

Wire side of female terminals

Is there battery voltage?

YES—Go to step 8.
NO—Repair an open in the wire between audio unit connector C (14P) terminal No. 1, USB adapter unit connector A (14P) terminal No. 1, and XM receiver connector A (14P) terminal No. 1. ■

8. Turn the ignition switch to ON (II).

9. Measure the voltage between XM receiver connector A (14P) terminal No. 2 and body ground individually.

XM RECEIVER CONNECTOR A (14P)

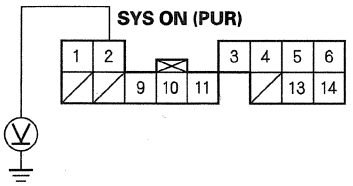

Wire side of female terminals

Is there battery voltage?

YES—Go to step 10.
NO—Repair an open in the wire between audio unit connector C (14P) terminal No. 2, USB adapter unit connector A (14P) terminal No. 1, and XM receiver connector A (14P) terminal No. 2. ■

10. Turn the ignition switch to LOCK (0).

11. Reconnect XM receiver connector A (14P).

12. Turn the ignition switch to ON (II).

13. Measure the voltage between XM receiver connector A (14P) terminal No. 11 and body ground.

XM RECEIVER CONNECTOR A (14P)

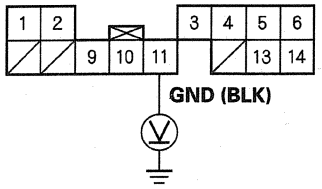

Wire side of female terminals

Is there less than 0.2 V?

YES—Substitute a known-good XM receiver (see page 23-112), and recheck. If the symptom/indication goes away, replace the XM receiver (see page 23-112). ■

NO—Repair an open in the wire between audio unit connector C (14P) terminal No. 11 and XM receiver connector A (14P) terminal No. 11. ■

Symptom Troubleshooting (cont'd)

Poor or no sound with XM radio (Audio unit does display XM channels)

NOTE:
- Check the vehicle battery condition first (see page 22-90).
- Check the connector for poor connections or loose terminals.
- Check the radio reception in an open area. Compare it to a known-good vehicle whenever possible. Poor reception/interference can be caused by tall buildings, mountains, or high-voltage power lines are nearby.
- If you can only tune to channel 000, 001, 174, and 247, make sure the audio unit is set to channel mode (see owners manual), if it is set to channel mode, call XM Satellite Radio client support, and check the account activation status.
- If you replace the XM receiver, the AcuraLink must be reactivated by Acura Client Services.

1. Turn the ignition switch to ON (II).
2. Turn on the audio unit and select XM radio.
3. Check for an error message on the display.

   Are there any messages displayed?

   YES—Go to error code list (see page 23-42). ■

   NO—
   - With AcuraLink: Go to step 4.
   - Without AcuraLink: Go to step 8.

4. Turn the ignition switch to LOCK (0).
5. Disconnect audio unit connector C (14P) and AcuraLink control unit (XM receiver) connector A (32P) and USB adapter unit connector A (14P), and the HandsFreeLink control unit 28P connector.
6. Check for continuity between AcuraLink control unit (XM receiver) connector A (32P) and body ground according to the table. Then check for continuity between the same terminals listed in the table and audio unit connector C (14P) terminal No. 4 (the harness shield).

Audio unit connector	Wire color
C5	GRN
C6	WHT
C13	BLK
C14	RED

AUDIO UNIT CONNECTOR C (14P)

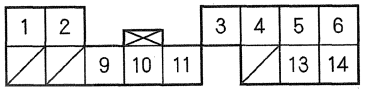

Wire side of female terminals

Is there continuity?

YES—There is a short in the wire(s) between the audio unit and the AcuraLink control unit (XM receiver) or short between the shielded wire. Replace the affected shielded harness. ■

NO—Go to step 7.

7. Check for continuity between AcuraLink control unit (XM receiver) connector A (32P) and audio unit connector C (14P) according to the table.

Audio unit connector	AcuraLink control unit (XM receiver) connector	Wire color
C5	A13	GRN
C6	A15	WHT
C13	A14	BLK
C14	A16	RED

AUDIO UNIT CONNECTOR C (14P)

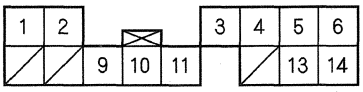

Wire side of female terminals

ACURALINK CONTROL UNIT (XM RECEIVER) CONNECTOR A (32P)

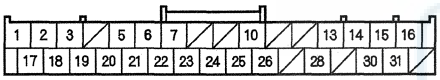

Wire side of female terminals

Is there continuity?

YES—Substitute a known-good AcuraLink control unit (XM receiver) (see page 23-111), then reconnect all connectors, and recheck. If the symptom/indication goes away, update the AcuraLink control unit if it does not have the latest software, then recheck. If the software is the latest, replace the AcuraLink control unit (see page 23-111). If symptom/indication is still present, replace the audio unit (see page 23-106). ■

NO—There is an open in the wire(s) between the audio unit and the AcuraLink control unit (XM receiver). Replace the affected shielded harness. ■

8. Disconnect audio unit connector C (14P), XM receiver connector A (14P), USB adapter unit connector A (14P), and the HandsFreeLink control unit 28P connector.

9. Check for continuity between XM receiver connector C (14P) and body ground according to the table. Then check for continuity between the same terminals listed in the table and audio unit connector C (14P) terminal No. 4 (the harness shield).

Audio unit connector	Wire color
C5	GRN
C6	WHT
C13	BLK
C14	RED

AUDIO UNIT CONNECTOR C (14P)

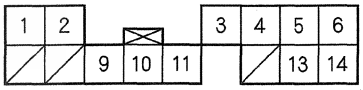

Wire side of female terminals

Is there continuity?

YES—There is a short in the wire(s) between the audio unit and the XM receiver or short between the shielded wire. Replace the affected shielded harness. ■

NO—Go to step 10.

(cont'd)

Symptom Troubleshooting (cont'd)

10. Check for continuity between XM receiver connector A (14P) and audio unit connector C (14P) according to the table.

Audio unit connector	XM receiver connector	Wire color
C5	A5	GRN
C6	A6	WHT
C13	A13	BLK
C14	A14	RED

AUDIO UNIT CONNECTOR C (14P)

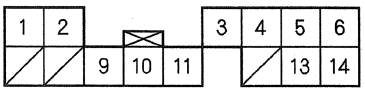

Wire side of female terminals

XM RECEIVER CONNECTOR A (14P)

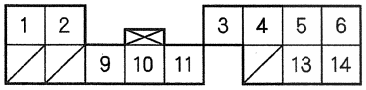

Wire side of female terminals

Is there continuity?

YES—Substitute a known-good XM receiver (see page 23-112), then reconnect all connectors and recheck. If the symptom/indication goes away, replace the original XM receiver (see page 23-112). If symptom/indication is still present, replace the audio unit (see page 23-106). ■

NO—There is an open in the wire(s) between the audio unit and the XM receiver. Replace the affected shielded harness. ■

Sound Quality Diagnosis

Special Tools Required
Diagnostics CD 07AAZ-SDBA100

Use the following tests to check sound quality.

NOTE: Before beginning the following tests, write down the client's bass, treble, fader and balance settings, then set them to their center positions for the testing.

Left/Right Channel ID

Do this test to confirm proper channel routing.

1. Insert the audio diagnostic CD (T/N 07AAZ-SDBA100) into the audio unit.
2. Play track No. 1 (left, both, right channel ID) at a normal, or slightly higher than normal, volume level.
3. The voice should be audible only from the channel or channels when indicated.
   - If the channel ID is correct for each side, go to phase test.
   - If the channel ID is not correct, check for:
     – Shorted speaker wire
     – Faulty amplifier
     – Faulty audio unit

Special Tools Required
Diagnostics CD 07AAZ-SDBA100

Use the following tests to check sound quality.

NOTE: Before beginning the following tests, write down the client's bass, treble, fader and balance settings, then set them to their center positions for the testing.

Phase Test

Do this test to confirm proper speaker phasing.

1. Insert the audio diagnostic CD (T/N 07AAZ-SDBA100) into the audio unit.
2. Play track No. 2 (phase) at a normal, or slightly higher than normal, volume level.
3. The voice should sound centered and focused when it is in-phase.
4. The voice should sound diffused, and have less bass when it is out of phase.
   - If the voice changes from in-phase to out of phase as indicated by the prompt, the phasing is correct. Go to electrical noise test (see page 23-101).
   - If the voice always sounds out of phase, phasing is not correct. Check for:
     – Crossed speaker wire
     – Faulty amplifier
     – Faulty audio unit

Special Tools Required
Diagnostics CD 07AAZ-SDBA100

Electrical Noise Test

Do this test to check for electrical noise being induced into the audio system.

NOTE: Electrical noise may be caused by outside sources that cannot be handled by the audio system. Make sure you remove any cell phones and/or turn off any aftermarket devices before beginning this test.

1. Insert the audio diagnostic CD (T/N 07AAZ-SDBA100) into the audio unit.
2. Play track No. 4 (digital zero) at a normal, or slightly higher than normal, volume level.
3. Operate any electrical device that may create electrical noise in the audio system, including starting the engine.
4. Play track No. 5 (near digital zero) at a normal, or slightly higher than normal, volume level.
5. Operate any electrical device that may create electrical noise in the audio system, including starting the engine.
6. Play track No. 6 (SNR) at a normal, or slightly higher than normal, volume level.

(cont'd)

Sound Quality Diagnosis (cont'd)

7. Operate any electrical device that may create electrical noise in the audio system, including starting the engine.

   - If no abnormal noise is heard, go to the individual speaker test (see page 23-102).
   - If the noise is present only during the SNR track, replace the audio unit.
   - If the noise is heard during the digital zero or near digital zero track, check for:
     - Poor ground at the audio unit, amplifier, engine, or battery cable
     - Pinched or shorted speaker or amplifier wire
     - Faulty amplifier
     - Faulty audio unit
     - Other faulty components causing excessive electrical noise (ignition coils, alternator, door lock actuators, etc.). Disconnect any suspect components, and then replay the tracks that were originally noisy. If the noise is gone, check the component's circuit and the component.

Special Tools Required
Diagnostics CD 07AAZ-SDBA100

Individual Speaker Test

Do this test to identify a faulty speaker.

1. Insert the audio diagnostic CD (T/N 07AAZ-SDBA100) into the audio unit.

2. Play track No. 30 (steady 300 Hz tone) at a normal, or slightly higher than normal, volume level.

3. Listen to each speaker for poor sound compared to the other channels. Use the audio unit's fader and balance settings to help isolate the channel with the problem.

   - If the sound quality produced by a specific speaker is poor, substitute it with a known-good speaker. If the poor sound quality continues, go to the sound balance test (see page 23-103).
   - If the sound quality is OK, go to the sound balance test (see page 23-103).

Special Tools Required
Diagnostics CD 07AAZ-SDBA100

Sound Balance Test

Perform this test to identify a faulty channel or speaker.

1. Insert the audio diagnostic CD (T/N 07AAZ-SDBA100) into the audio unit.
2. Confirm the bass and treble are set to the center positions.
3. Play track No. 3 (pink noise) at a normal, or slightly higher than normal, volume level.
4. You should hear a static sound through all the speakers.
5. Insert the audio diagnostic CD (T/N 07AAZ-SDBA100) into the audio unit of a known-good vehicle.
6. Set the bass and treble to the center positions.
7. Play track No. 3 (pink noise) all the same level as was played in step 3.
8. Compare the sounds made by the two vehicles.
   - If the sound does not have as much bass, check the subwoofer and the circuit.
   - If the sound does not have enough hiss, check the tweeters and their circuits.

Special Tools Required
Diagnostics CD 07AAZ-SDBA100

Frequency Sweep

Do this test to find rattles or reverberations that may cause a perception of poor sound quality.

1. Insert the audio diagnostic CD (T/N 07AAZ-SDBA100) into the audio unit.
2. Play track No. 13 (sweep from 500 Hz to 35 Hz) at a normal, or slightly higher than normal, volume level.
3. Listen to each speaker for poor sound quality or reverberations caused by specific frequencies. Use the voice-over to estimate the frequency that causes the vibration. Use the audio unit's fader and balance settings to help isolate the channel with the problem.
   - If vibrations or poor sound quality are heard, go to step 4.
   - If no vibrations or poor sound quality are heard, go to sound judging (see page 23-104).
4. Choose the appropriate track from No. 14 to 25 (small range frequency sweep) or 26 to 53 (single frequencies) to recreate the frequency that caused the poor sound quality or vibration witnessed in step 3; this aids in diagnosis of the cause.

   NOTE: When you get to the track that recreates the problem, select the repeat function on the audio unit, this will help you isolate the cause.
5. Replace or insulate the source of the vibration or if the speaker is the source of the poor sound quality, replace it.

Sound Quality Diagnosis (cont'd)

Special Tools Required
Diagnostics CD 07AAZ-SDBA100

Sound Judging

Do this test to compare overall sound quality, imaging, and dynamics between the client's vehicle and a known-good vehicle. Only use a vehicle of the same model and trim level for this test.

1. In the client's vehicle, set the bass, treble, fader, and balance settings to the client's normal settings that were written down before beginning the test.
2. Insert the audio diagnostic CD (T/N 07AAZ-SDBA100) into the audio unit.
3. Play tracks No. 7 to 12 (sound quality, midland, dynamics, and imaging demonstration tracks) at a normal, or slightly higher than normal, volume level. Write down the volume setting being used.
4. Listen to areas of the track that stand out as being either very clear or poorer than other areas of the track.
5. In a known-good vehicle, insert the audio diagnostic CD (T/N 07AAZ-SDBA100) into the audio unit.
6. Play the tracks at the same volume level and the same bass, treble, balance, and fader settings as used in step 3 in the client's vehicle.
7. Listen to the same area of the track that stood out as being either very clear or poorer than other areas of the track.
8. Compare the client's vehicle's sound quality results to the known-good vehicle's results.

   - If the sound quality in the client's vehicle is comparable to the sound quality in the known-good vehicle, then the client's vehicle is operating as designed.
   - If the sound quality is not comparable, check these items in order:
     - Loose or improperly installed speakers or other hardware that may create interference from the vibrations generated by the speakers
     - Poor power or ground to the stereo amplifier
     - Damaged speaker(s)
     - Faulty amplifier
     - Faulty audio unit

Seek Stop Test

Do this test to check the performance of the audio unit's AM and FM reception. Refer to symptom troubleshooting: audio sound weak or distorted, or no sound is heard from speaker(s) (display is normal) (see page 23-49) before continuing with this test.

NOTE:
- Aftermarket metallic window tint, aftermarket theft-recovery devices and other aftermarket devices may affect reception.
- Changes in cloud cover and other atmospheric conditions will affect the ability of the audio unit to receive radio signals.

1. Park the client's vehicle in an open area, away from buildings or other obstructions.
2. Park a known-good vehicle (same year, model, and trim level) next to the client's vehicle, facing the same direction.
3. Start the engine in the client's vehicle, and turn on the radio.
4. Set the FM receiver to 87.7 MHz.
5. Press the Seek + button, and record the first station that the audio unit locks onto.
6. Press the Seek + button repeatedly, and write down each station that the audio unit locks onto until the station recorded in step 5 is reached again.
7. Set the AM receiver to 530 kHz.
8. Press the Seek + button, and record the first station that the audio unit locks onto.
9. Press the Seek + button repeatedly, and write down each station that the audio unit locks onto until the station recorded in step 8 is reached again.
10. Turn the ignition switch to LOCK (0).
11. Start the engine in the known-good vehicle, and then do steps 4 thru 10 on the known-good vehicle.
12. Compare the number of stations received in steps 6 and 9 in the client's vehicle with the number of stations received in the known-good vehicle.
    - If the number of stations received is the same, or within 10 %, the audio unit's tuner performance is OK. The problem may be atmospheric conditions, multi-path interference, or other obstructions to the radio signal.
    - If the client's vehicle receives fewer stations by at least 10 %, go to step 2 of poor radio reception or interference (see page 23-43).

Audio Unit Removal/Installation

SRS components are located in this area. Review the SRS component locations (see page 24-12), and the precautions and procedures (see page 24-14) before doing repairs or service.

NOTE:
- Put on gloves to protect your hands.
- Take care not to scratch the dashboard and related parts.
- Lay a workshop towel under the parts when working on them to protect the face panel from scratches or other damage.
- Eject all the CDs before removing the audio unit to prevent damaging the CD player's load mechanism.
- If you are replacing the audio unit, write down the audio presets (if possible), and enter them into the new audio unit.

1. Make sure you have the anti-theft codes for the audio system and the navigation system (if equipped).

2. Remove the console trim (see page 20-97).

3. Remove the bolts (A) and self tapping screws, then pull out the audio unit (B).

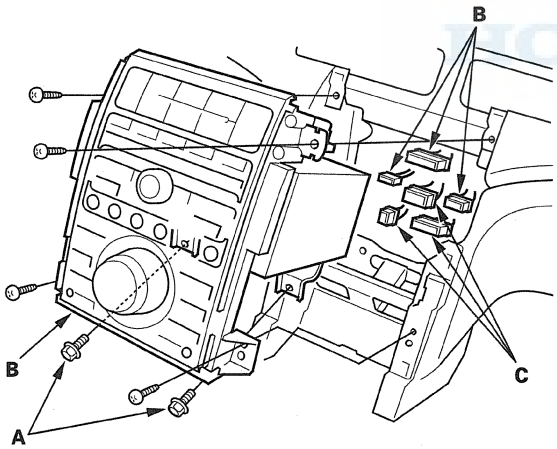

A
6 x 1.0 mm
9.4 N·m (0.95 kgf·m, 6.9 lbf·ft)

4. Disconnect the connectors (C), then remove the audio unit.

5. Remove the climate control unit (see page 21-84).

6. Remove the interface dial (see page 23-256).

7. Remove the screws and the audio unit (A) from the audio panel (B).

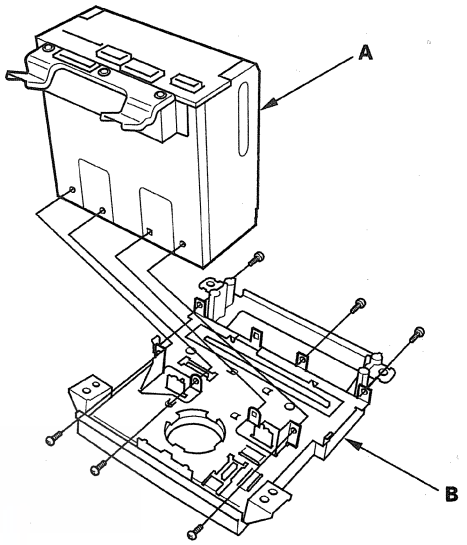

8. Install the audio unit in the reverse order of removal, and note these items:

- Make sure all the connectors and the antenna lead are secure.
- Enter the anti-theft codes for the audio system and the navigation system, and set the clock (on vehicles without navigation).
- If necessary, enter the navigation system code.

Audio-HVAC Subdisplay Unit Removal/Installation

NOTE:
- Put on gloves to protect your hands.
- Take care not to scratch the dashboard.

1. Remove the dashboard upper visor (A).

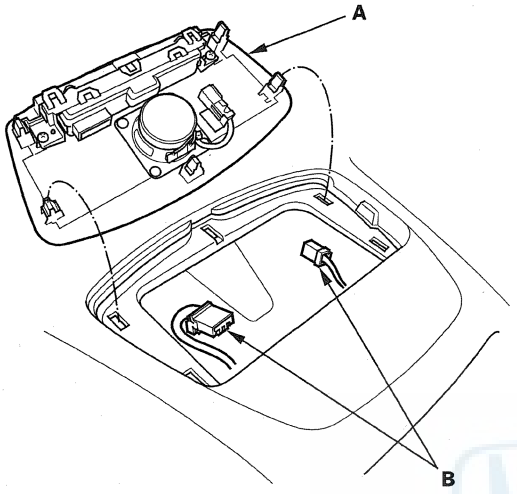

2. Disconnect the connectors (B).

3. Remove the self-tapping screws and the audio-HVAC subdisplay unit (A).

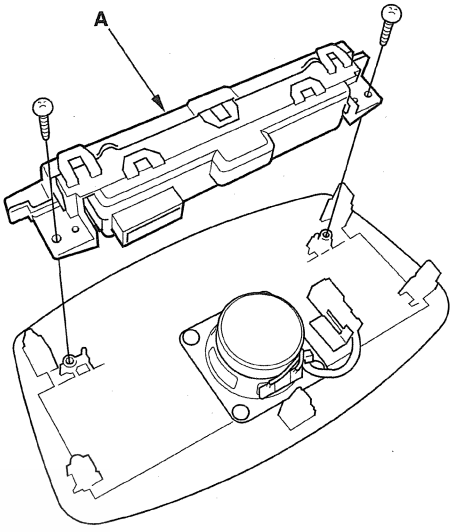

4. Install the display in the reverse order of removal.

Speaker Test/Replacement

Front Door Speaker

1. Remove the front door panel (see page 20-9).
2. Pull the speaker (A) straight out, just enough to release the upper clips. Then lift the speaker straight up to release the lower clips (B).

NOTICE
If you pull the speaker out too far from the door, you will damage the lower clips.

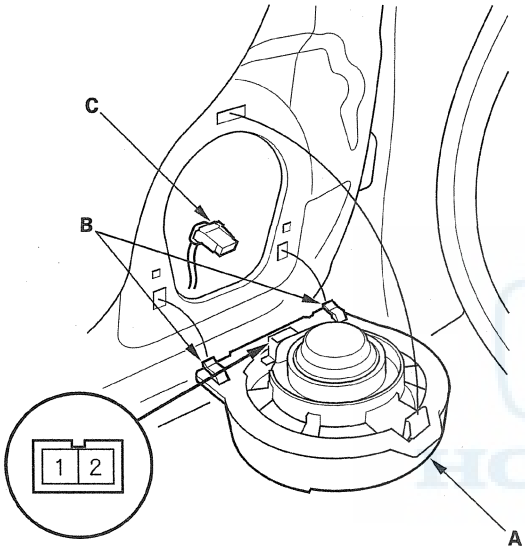

3. Disconnect the 2P connector (C), and remove the speaker.
4. Measure the resistance between the terminals No. 1 and No. 2. There should be about 2 Ω.
5. If the resistance is not as specified, replace the door speaker.

Rear Door Speaker

1. Remove the rear door panel (see page 20-21).
2. Remove the three mounting screws from the rear speaker (A).

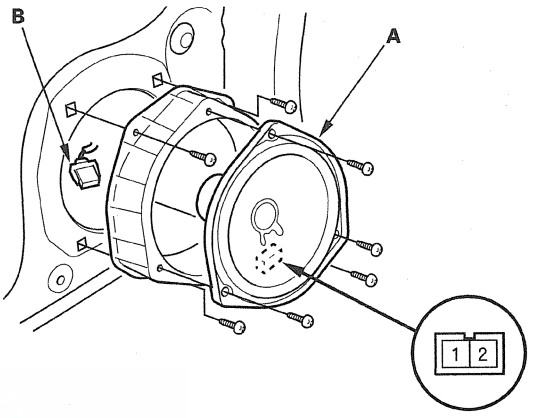

3. Disconnect the 2P connector (B), and remove the rear door speaker.
4. Measure the resistance between the terminals No. 1 and No. 2. There should be about 2 Ω.
5. If the resistance is not as specified, replace the door speaker.

Front Door Tweeter

1. Remove the front door sash inner trim (see page 20-18).
2. Remove the screws and tweeter speaker (A) from the quarter inner trim (B).

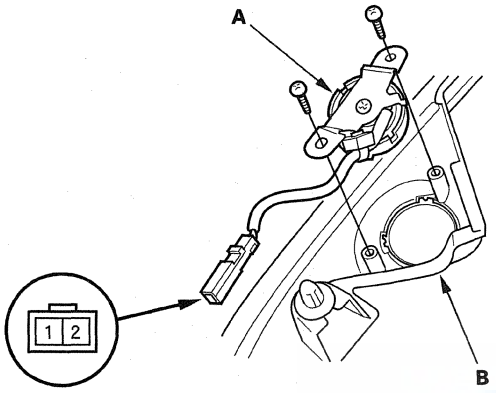

3. Measure the resistance between the front door tweeter 2P connector terminals No. 1 and No. 2. There should be about 3.6 Ω.
4. If the resistance is not as specified, replace the front door tweeter.

Rear Twiddler

1. Remove the rear shelf (see page 20-80).
2. Disconnect the 2P connector (A), then remove the connector (B) from the rear twiddler bracket (C).

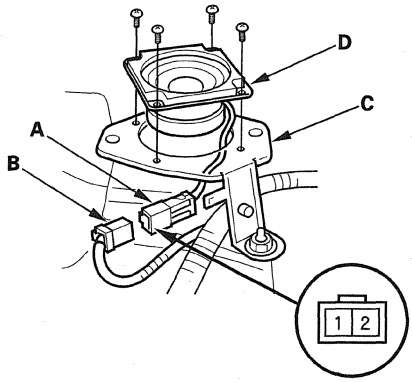

3. Remove the screws and the rear twiddler (D).
4. Measure the resistance between the terminals No. 1 and No. 2. There should be about 4 Ω.
5. If the resistance is not as specified, replace the rear twiddler speaker.

(cont'd)

Speaker Test/Replacement (cont'd)

Front Center Speaker

NOTE:
- Put on gloves to protect your hands.
- Take care not scratch the dashboard.

1. Remove the dashboard upper visor (A).

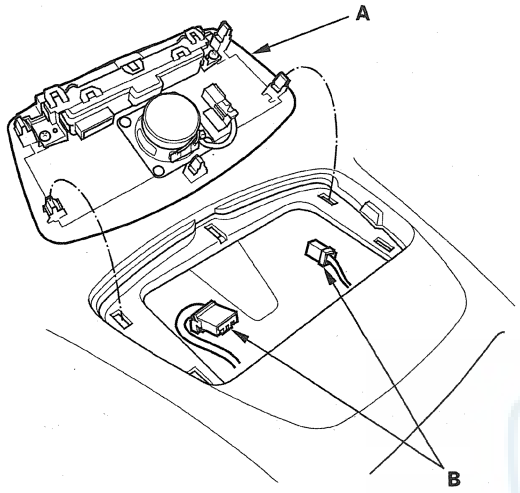

2. Disconnect the connectors (B).
3. Remove the screws, connector (A), and the front center speaker (B).

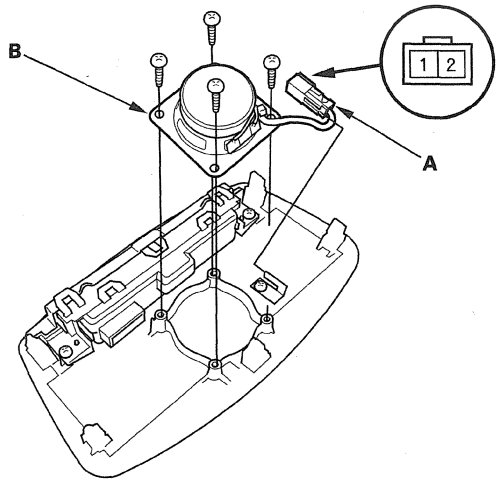

4. Measure the resistance between the terminals No. 1 and No. 2. There should be about 4 Ω.
5. If the resistance is not as specified, replace the front center speaker.

Subwoofer

1. Remove the rear shelf (see page 20-80) and rear shelf under cover.
2. Disconnect the 2P connector (A), then remove connector clip (B) from the subwoofer duct (C).

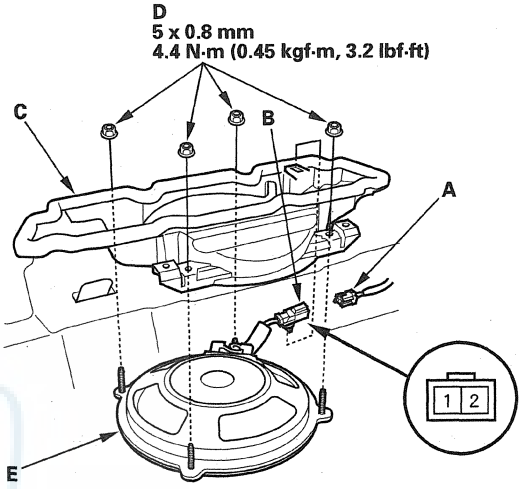

3. Remove the nuts (D) and the subwoofer (E).
4. Measure the resistance between the terminals No. 1 and No. 2. There should be about 2 Ω.
5. If the resistance is not as specified, replace the subwoofer.

Stereo Amplifier Removal/ Installation

1. Remove the right side trunk trim (see page 20-83).
2. Loosen and remove the mounting bolts (A), then pull out the stereo amplifier (B).

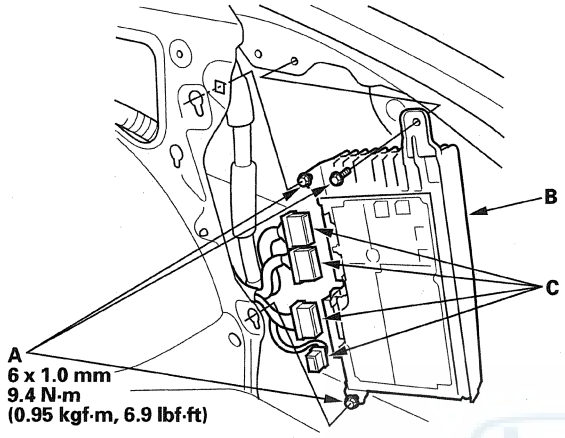

3. Disconnect the connectors (C).
4. Install the stereo amplifier in the reverse order of removal.

AcuraLink Control Unit (XM Receiver) Removal/Installation

NOTE: The AcuraLink must be reactivated by Acura Client Services when:

- The AcuraLink (XM) unit is replaced.
- DATA RESET was selected while in the self-diagnostic function.
- Vehicle ownership changes.

1. Remove the left side trunk trim (see page 20-83).
2. Disconnect the antenna 2P connector (A) 32P connector (B) from the AcuraLink control unit (XM receiver) (C).

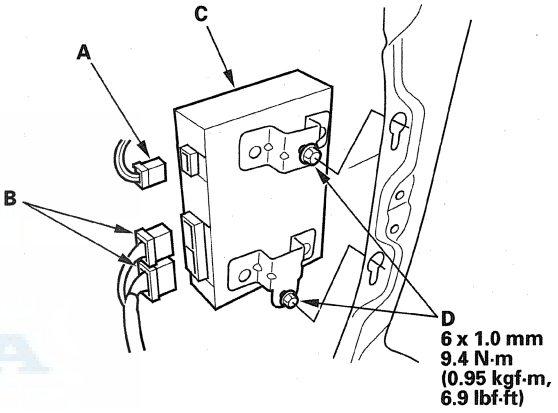

3. Loosen the mounting bolts (D), then pull out the AcuraLink control unit (XM receiver).
4. Install the AcuraLink control unit (XM receiver) in the reverse order of removal.

   NOTE: If you replaced the AcuraLink control unit, make sure it has the latest software (see page 23-294).

5. Call XM Satellite Radio to update the client's account with the new XM/HIP serial number. Also call Acura Client Services to reactivate the AcuraLink.

XM Receiver Removal/Installation

1. Remove the left side trunk trim (see page 20-83).
2. Disconnect the 2P connector (A) and 14P connector (B) from the XM receiver (C).

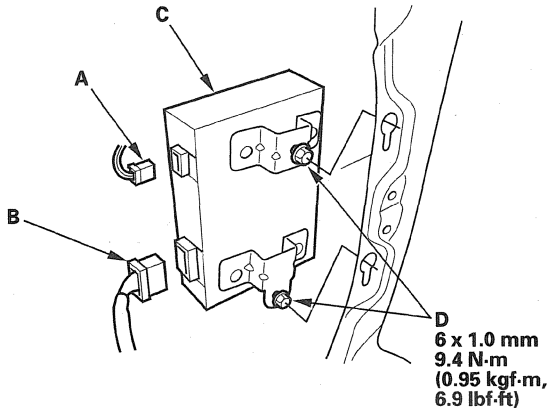

3. Loosen the mounting bolts (D), then pull out the XM receiver.
4. Install the XM receiver in the reverse order of removal.

Auxiliary Jack Assembly Replacement

1. Remove the accessory trim (see page 20-92).
2. Disconnect the 5P connector (A) from the auxiliary jack assembly (B).

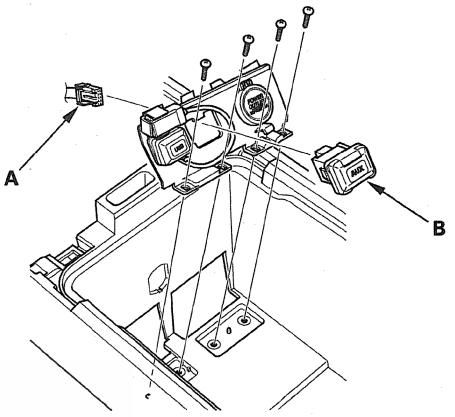

3. Install the auxiliary jack assembly in the reverse order of removal.

Active Noise Cancellation Unit Removal/Installation

1. Remove the stereo amplifier (see page 23-111).
2. Remove the screws and the active noise cancellation unit (A).

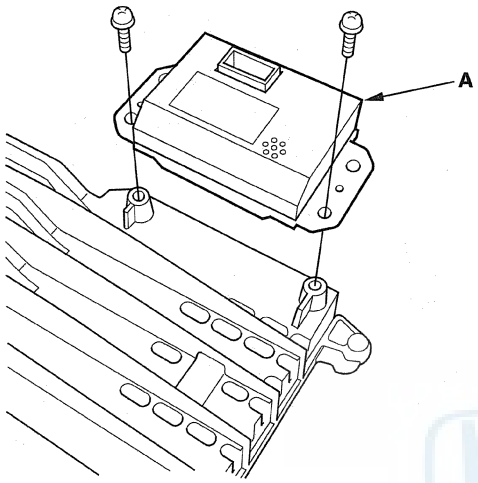

3. Install the unit in the reverse order of removal.

Active Noise Cancellation Microphone Removal/Installation

1. Remove the headliner (see page 20-86).
2. Disconnect the connectors (A), then remove the screws and the active noise cancellation microphone (B).

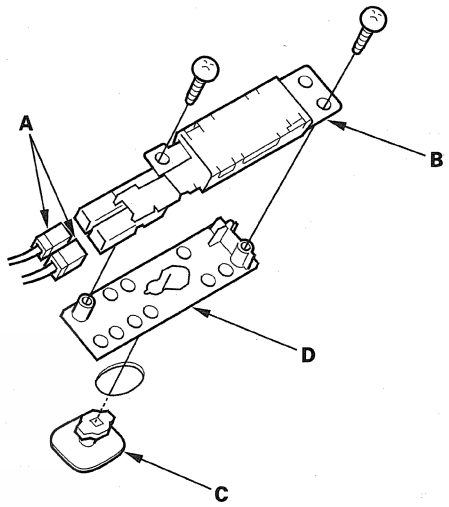

3. Remove the cap (C) from the base (D).
4. Install the microphone in the reverse order of removal.

HONDA

USB Adapter Unit Replacement

1. Remove the glove box (see page 20-103).
2. Disconnect the connectors (A) from the USB adapter unit (B).

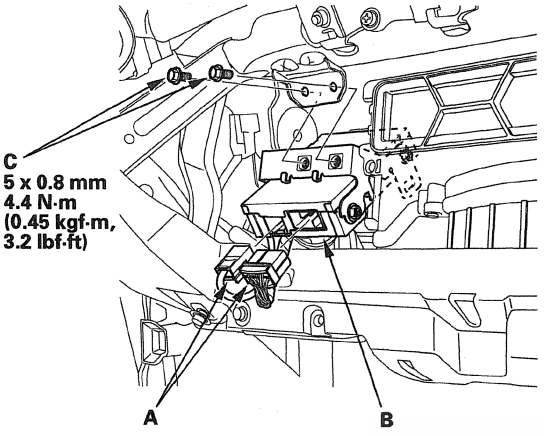

3. Remove the mounting bolts (C) and the USB adapter unit.
4. Install the USB adapter unit in the reverse order of removal.

USB Jack Replacement

1. Remove the accessory trim (see page 20-92).
2. Pull out the USB jack (A) from the accessory trim, then disconnect the USB adapter cable 5P connector (B).

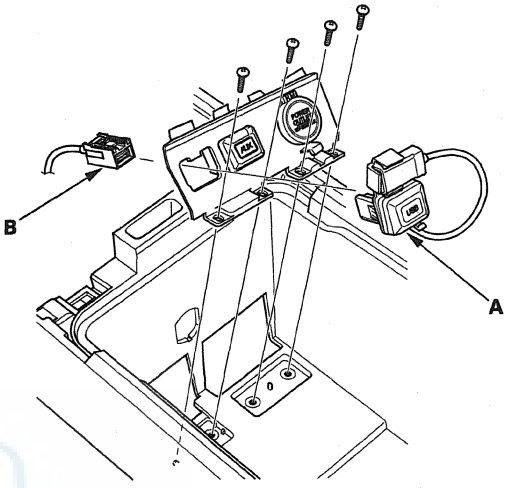

3. Install the USB jack in the reverse order of removal.

Audio Remote Switch Test

1. Remove the driver's airbag assembly (see page 24-197).
2. Remove the 20P connector from the cable reel.

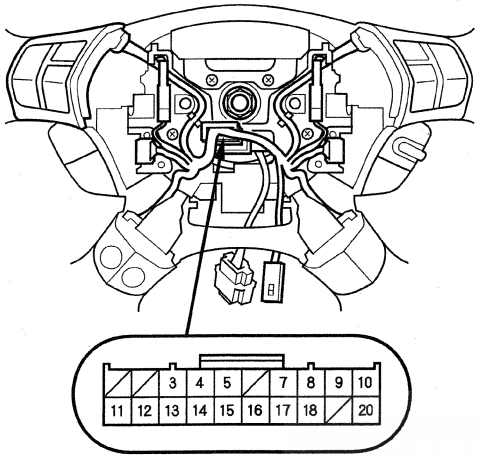

Wire side of female terminals

3. Measure the resistance between terminals No. 17 and No. 18 in each switch position according to the table.

Position	Resistance
No button pressed	About 10 kΩ
MODE	About 3.7 kΩ
CH (+)	About 1.7 kΩ
CH (−)	About 775 Ω
▲ (VOL. UP)	About 357 Ω
▼ (VOL. DOWN)	About 100 Ω

4. If the resistance is not as specified, replace the remote switch.
5. Use a diode tester between the terminals in each switch position according to the table.

Terminal	8		9
	○	⊣◁	○

6. If the diode test is not as specified, replace the switch.

AM/FM Antenna Amplifier Replacement

1. Remove the C-pillar trim (see page 20-76).
2. Disconnect the connectors (A) from the AM/FM antenna amplifier (B).

AM/FM main antenna amplifier

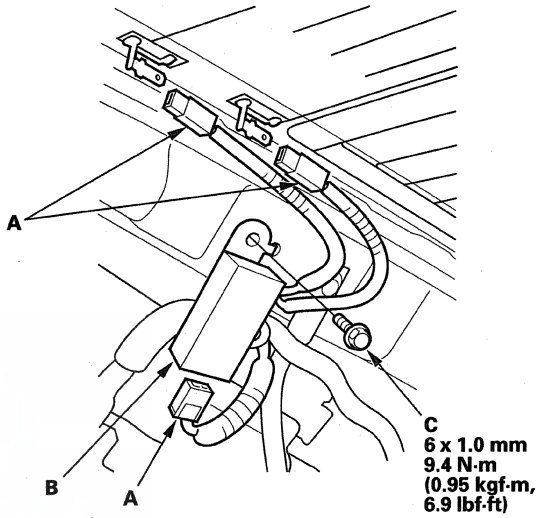

AM/FM subantenna amplifier

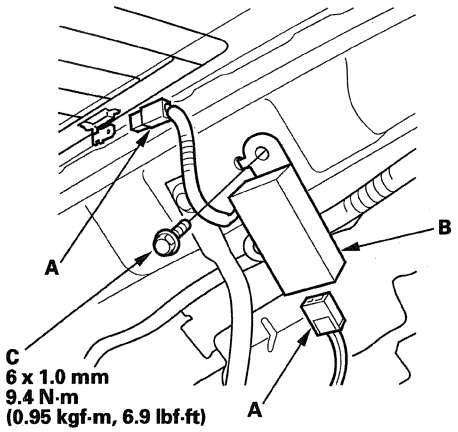

3. Remove the bolt (C) and AM/FM antenna amplifier.
4. Install the unit in the reverse order of removal.

XM Antenna Replacement

1. Remove the headliner (see page 20-86).
2. Remove the nut (A) from the XM antenna (B).

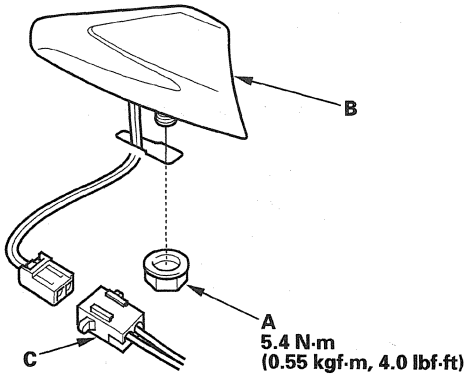

3. Disconnect the connector (C), and remove the XM antenna.
4. Install the XM antenna in the reverse order of removal.

AM/FM Antenna Repair

NOTE: To make an effective repair, the broken section must not be longer than one inch.

1. Lightly rub the area around the broken section (A) with fine steel wool, then clean it with isopropyl alcohol.

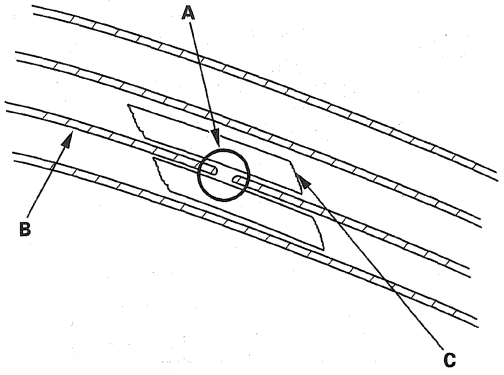

2. Carefully mask above and below the broken portion of the AM/FM antenna wire (B) with cellophane tape (C).
3. Using a commercially available rear window defogger repair kit, apply a heavy coat of paint (A) extending about 1/8" on both sides of the break. Allow 30 minutes to dry.

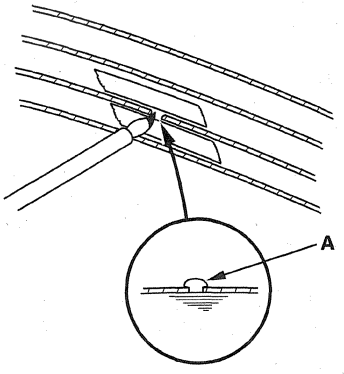

4. Check for continuity in the repaired wire.
5. Apply a second coat of paint in the same way. Let it dry 3 hours before removing the tape.

Component Location Index

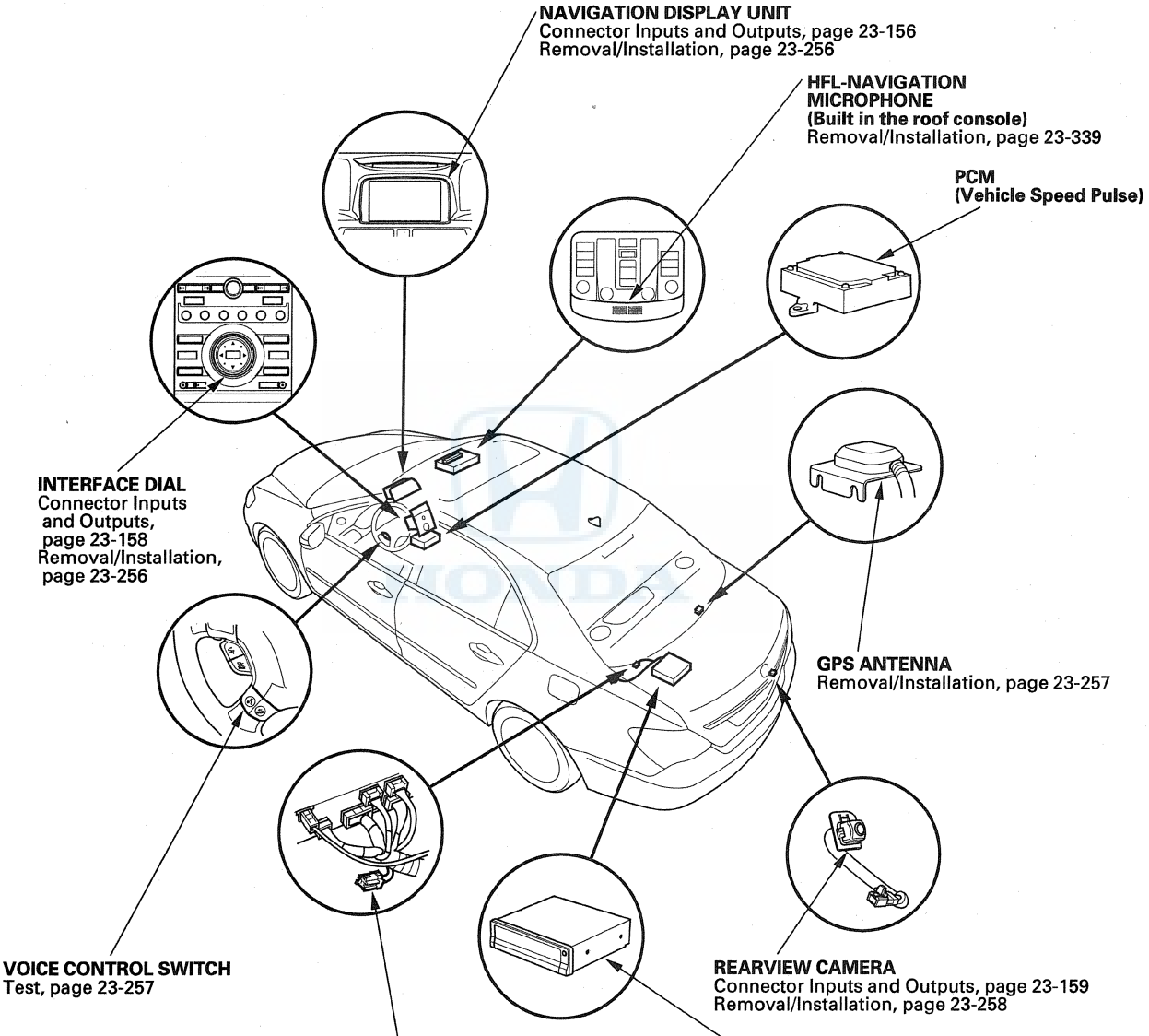

(cont'd)

Component Location Index (cont'd)

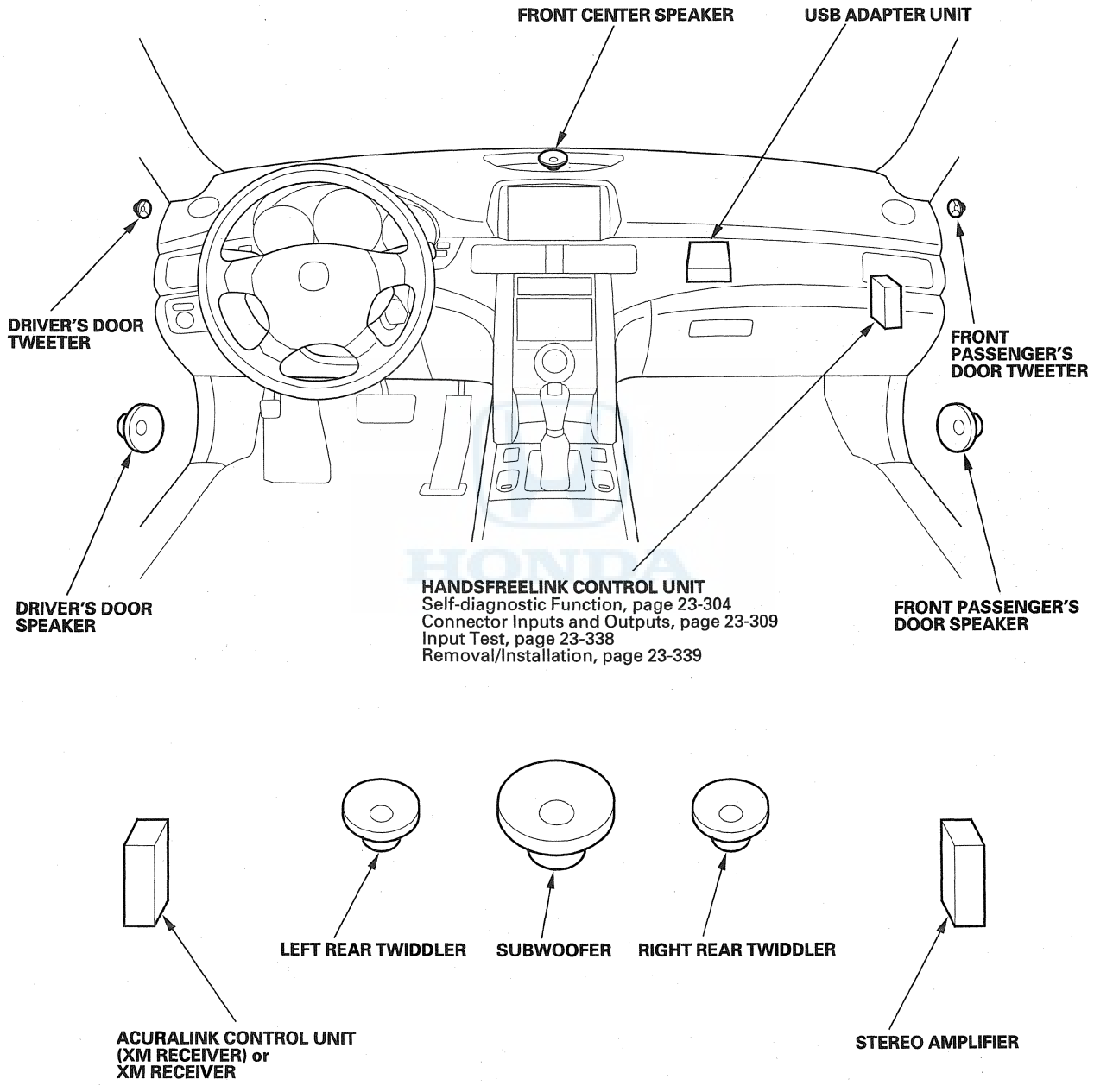

General Troubleshooting Information

General Operation

Refer to the navigation system manual for the navigation system operating procedures.

Anti-theft Feature

The navigation system and audio unit have a coded theft protection circuit. Make sure you have the anti-theft security code before:

- Disconnecting the battery.
- Disconnecting the navigation unit 8P connector.
- Removing the No. 5 (7.5 A) fuse from the driver's under-dash fuse/relay box.

After service, reconnect power to the navigation unit, and turn the ignition switch to ON (II). Enter the 4-digit anti-theft security code, then select Done.

If the code cannot be found, use the interactive Network (iN) to look it up. You can view the serial number in one of the ECU Info diagnostic screens (see page 23-174). Alternatively, you can find the serial number on the underside label which is located on the navigation unit in the trunk.

When replacing the navigation unit, be sure to give the client the new anti-theft security code.

Symptom Diagnosis

Certain circumstances and system limitations will result in occasional vehicle positioning errors. Some client's may think this indicates a problem with the navigation system when, in fact, the system is normal. Keep the following items in mind when interviewing client's about symptoms of the navigation system.

Self-Inertial Navigation Limitations

The limitations of the self-inertial portion of the navigation system (the yaw rate sensor and the vehicle speed signal) can cause discrepancies between the vehicle's actual position and the indicated vehicle's position (GPS vehicle position).

The following circumstances may cause vehicle positioning errors:

- Moving the vehicle with the engine stopped and the vehicle stopped, such as by ferry or tow truck, or if the vehicle is spun on a turn table.
- Tire slippage, changes in tire rolling diameters, and some driving situations may cause discrepancies in travel distances. Examples of this include:
  - Continuous tire slippage on a slippery surface
  - Driving with snow chains mounted
  - Abnormal tire pressure
  - Incorrect tire size
  - Frequent lane changes across a wide highway
  - Continuous driving on a straight or gently curving highway
  - Very bumpy roads
- Tolerances in the system and map inaccuracies sometimes limit how precisely the vehicle's position is indicated. Examples of this include:
  - Driving on roads not shown on the map (map matching is not possible)
  - Driving on a road that winds in one direction, such as a loop bridge, an interchange, or a spiral parking garage
  - Driving on a road with a series of sharp hair-pin turns
  - Driving near a gradual highway exit or transition
  - Driving on one of two close parallel roads
  - Making many 90 degree turns

Global Positioning System (GPS) Limitations

The GPS cannot detect the vehicle's position or elevation during the following instances:

- For the first 5 to 10 minutes after reconnecting the battery (this process can take as long as 45 minutes).
- When the satellite signals are blocked by tall buildings, mountains, tunnels, large trees, inside parking structures or large trucks.
- When the GPS antenna is blocked by metallic window tinting or by an object placed above it in the vehicle. The GPS antenna requires a clear unobstructed view of the sky.
- When there is no satellite signal output (signal output is sometimes stopped for satellite servicing).
- When the satellite signals are blocked by the operation of some electronic aftermarket accessories including, but not limited to non-OEM in-dash entertainment units (radio, CD players/changers, radar detectors and theft recovery systems) and cell phones placed near the navigation system.

(cont'd)

General Troubleshooting Information (cont'd)

The accuracy of the GPS is reduced during these instances:

- Metallic window tinting above the GPS antenna.
- When only three or less satellite signals are received (Four satellite signals are required for accurate positioning).
- When driving near high tension power lines.
- When the satellite control centers are experiencing problems.

Muting Logic

Whenever the navigation system is giving guidance, the front speakers are muted. When the voice control system is being used, all of the speakers are muted. If the Acuralink or HandsFreeLink is in use, the voice control system is unavailable and a message appears onscreen.

LCD Unit Limitations

NOTE: The screen is not touch sensitive. Use the interface dial and buttons to select items on the screen.

- In cold temperatures, the display may stay dark for the first 2 or 3 minutes until it warms up.
- When the display is too hot because of direct summer sunlight, it will remain dark until the temperature drops (you may see an error message displayed stating this fact).
- When the humidity is high and the interior temperature is low, the display may appear cloudy. The display will clear up after some use.
- Fingerprints on the screen may be noticeable. Clean the screen with a soft, damp cloth. You may use a mild cleaner intended for eye glasses or computer screens. To avoid scratching the panel, do not rub too hard or use abrasive cleaners or shop towels.

Symptom Duplication

- When the symptom can be duplicated, verify that it is not a characteristic of the system. Review the navigation system manual and compare it to a known-good vehicle (with the same software and database), under the same conditions. If the symptom is not the same as the known-good, follow the self-diagnostic procedures and the appropriate troubleshooting procedures.
- When the symptom does not reappear or only reappears intermittently, ask the client about the conditions when the symptom occurred.
  - Always ask the client to demonstrate the problem.
  - Try to establish possible user error or misunderstanding of the system.
  - Try to establish if outside interference may have been the cause.
  - Try to duplication the symptom under the same conditions the client experienced.
  - Vibration, temperature extremes, and moisture (dew, humidity) are factors that are difficult to duplicate.
  - Inspect the vehicle for after-market electronic devices (vehicle locators, amps, radar detectors, etc.) that may be hidden.

NOTICE

When troubleshooting navigation system problems, ensure that the known-good vehicle is the same software version year and model as the vehicle being serviced. Mixing incompatible navigation DVDs or other system components can delay the troubleshooting process by creating symptoms or issues causing effects unrelated to the original problem.

Service Precautions

- If you need to replace the navigation unit, you can back-up the navigation data and transfer it to a new navigation unit. See Save users memory (see page 23-180).
- When the battery is disconnected, the internal GPS clock is reset to 0:00. The clock resets to the correct time after the system finishes GPS initialization.
- Before disconnecting the battery, make sure you have the anti-theft codes for the audio system and the navigation system. Also obtain any PGM-FI or transmission DTCs and freeze frame data (which are lost when the PCM loses power).
- After reconnecting the battery, you have to wait to get the initial signal from the satellite. It will take from 10 to 45 minutes.
- Adjust the setup clock settings (time zone and daylight savings) in the navigation system.
- Before returning the vehicle to the client, enter the anti-theft codes for the audio system and the navigation system.

System Initialization

If the navigation system loses power (like the battery was disconnected), the navigation system requires initialization. Once completed, your system is ready to use.

This initialization requires the following:

- Entering the 4-digit anti-theft security code to unlock the system
- GPS initialization (may not be needed depending of the length of time the system was without power)
- Map matching to align the GPS to a location on the map

Entering the Security Code

Any time the navigation system loses power, you need to enter the 4-digit anti-theft code on the navigation system display. This 4-digit code is located on a small code card that was given to the client. Enter the 4-digit code, than select Done.

If the navigation system anti-theft code is missing, use the interactive Network (iN) to look it up. You need the serial number for the navigation unit to do this. You can view the serial number by entering the diagnostic mode. Select Unit Check from the main menu, then the ECU info diagnostic screen. This gives you the serial number without removing the navigation unit.

The iN may display more than one code for a given serial number. This is because serial numbers are not unique. You may have to try more than one 4-digit code. If no code is shown, or if the code(s) given do not work in the navigation unit, contact the Automobile Warranty department. If the code 0000 works, replace the navigation unit.

When replacing the navigation unit or audio unit, make sure you give the client the new anti-theft security code.

GPS Initialization

NOTE: You must park the vehicle outside with a clear view of the sky.

Depending on the length of time the battery was disconnected, your system may require GPS initialization. If it does, the following screen appears:

The navigation system lost power and is acquiring its location from the GPS satellites. This usually takes less than 10 minutes.

*** Start the engine.**
*** Park the vehicle in an open area away from trees, power lines, and tall buildings.**
*** Remove loose articles, cell phones, or electrical accessories located near the GPS antenna.**
*** If this screen is displayed repeatedly when starting the vehicle, see your dealer.**

(cont'd)

General Troubleshooting Information (cont'd)

If this procedure is not necessary, the system proceeds directly to the Disclaimer screen. During initialization, the system searches for all available GPS satellites, and obtains their orbital information. During this procedure the vehicle should be out in the open with a clear view of the sky.

If the navigation system finds the satellites properly, this box clears, and changes to the Disclaimer screen. If within 10 minutes the system fails to locate a sufficient number of satellites to locate your position, the following screen appears.

Something is interfering with the system's ability to acquire its location. Check the following:

*** The vehicle must be in an open area with a clear view of the sky.**
*** Remove sources of GPS interference like metallic window tint above antenna, or electrical items near antenna(see owner's manual for details).**
*** Check GPS antenna cable connection.**
*** Restart the engine and repeat the GPS acquire procedure. If the problem persists, see your dealer.**

It this screen appears, turn off the engine, then restart the vehicle and move it to a different location. If the Disclaimer screen appears, the GPS initialization is complete.

NOTE:
- The average acquiring time is less than 10 minutes, but it can take as long as 45 minutes.
- If the system is still unable to acquire a signal, follow the instructions on the screen. If this screen appears again, go to troubleshooting for the GPS icon is white or not shown (see page 23-230).
- Skip to a CSF screen by pushing the MENU and INFO buttons at the same time and you can move to a System Links screen.

Map Matching

This part of the initialization matches the GPS coordinates with a road on the map screen. To do this part of the procedure, make sure that the navigation system displays a map, and drive the vehicle on a mapped road shown on the map screen. Do not enter a destination at this time. When the name of the current road you are driving on appears at the bottom of the screen, the entire procedure is complete. Your system is now ready to use.

Obtaining A Navigation DVD

If the Navigation DVD is lost or damaged, or you need a yearly updated DVD, you have two ways to purchase one. You can either call (888) 549-3798, or order on-line at www.acuranavi.com.

Both methods require a credit card. The DVD for this model has a white label, and cannot be ordered through the parts system. The following DVDs will not work in this navigation system:

- Earlier model navigation DVDs (black, orange, light blue label and the older versions with a white label)
- Map software programs manufactured by other companies
- DVD movies, or DVDs containing audio recordings

Update DVDs are available for purchase usually in the fall of each year. They may contain the following:

- Enhanced maps and points of interest (POI) coverage
- Fixes for minor software bugs
- Additional features

NOTE:
- Map matching must be done any time the DVD is removed or replaced.
- Always order navigation DVDs on an as-needed basis. During a typical model year, each color DVD may undergo a half a dozen software only version upgrades to fix minor issues on some or all models the DVD supports. This is normal. Usually only the letter at the end of the version number changes, while the database (maps and POIs) remain unchanged.
- Never promise your client future free updates. There are no free programs for updating the navigation DVD. Update DVDs are generally available for purchase each fall. The online DVD order site provides information when an update for a particular color DVD is available.
- Damaged discs are not covered by warranty unless they have been damaged by the navigation system.

DVD Handing and Cleaning

To avoid damaging or leaving fingerprints on the DVD, always handle it by the edges and place it in a jewel case whenever it is outside the navigation unit. Deep scratches or fingerprints on the back of the DVD can cause intermittent rebooting or other system errors.

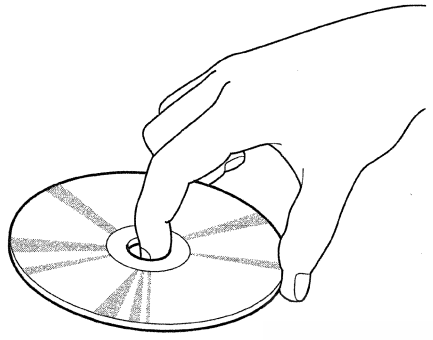

Smudges and fingerprints can be carefully removed using a mild cleaner and tissues designed to clean eyeglasses. To clean a DVD, use a clean soft cloth. Very gently wipe across the DVD from the center to the outside edge, never in a circular motion.

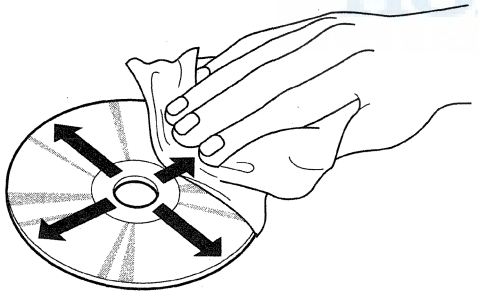

Do not place stabilizer rings or labels on the DVD.

Earliest DVD Version Application for Each Model

Each navigation system DVD contains a map/POI (point of interest) database and the navigation system software for each model that it supports. Inserting an older DVD can cause problems since it lacks the software to provide the specific features needed for that model. Unfortunately, the navigation software does not detect or warn you that the version is outdated, and it may even appear to operate.

NOTE: Replacing a DVD just because the version number is higher is not always warranted. A higher software version does not necessarily mean it contains newer software for your model. The DVD contains software for all models that use the same color DVD, and a revised number may or may not have software fixes or upgrades for the model in question.

Typical warning symptoms that an outdated or incorrect DVD is being used include:

- The Acura model navigation screen may display a Honda logo while booting up.
- A newly introduced model feature or current accessory may not display properly, and Extension displays instead.

  NOTE: Extension may be displayed when using Music Link, but should never be displayed when XM is selected.

- The current street (the street being driven on) does not appear properly at the bottom of the map screen display when the vehicle is driven on a main road.

  NOTE: If necessary, compare the operation to the navigation system of the same model and year vehicle that has a current DVD.

(cont'd)

General Troubleshooting Information (cont'd)

How to Identify Navigation DVD Versions, and How to Inspect A DVD for Damage

To determine the navigation version on a particular model, start the engine, then locate the navigation unit. Open the DVD door, and push the eject button to eject the DVD. Hold the DVD by the edges, and check for these items:

- Check any official Honda service website for more service information about the navigation DVDs.
- The DVD label color.
- Read the DVD version on the label, and note it on the repair order. The version number is near the bottom of the label text (for example, ver: 4.23A). You will need this version number:
  - To verify that the DVD version is appropriate for the vehicle. Check any official Honda service website for more service information.
  - Any time you call Tech Line regarding a navigation system issue.
  - To answer client inquires concerning update or coverage issues.

    NOTE: Clients may obtain DVDs from sources outside the normal ordering process. If you determine this is the case, recommend that your client purchase the appropriate DVD from the Acura Disc Fulfillment Center (see ORDERING A DVD).

  - Check the underside of the DVD for signs of mishandling. Deep or random scratches, light swirl marks, or fingerprints can cause random lock-ups, reboots, erratic voice response, erratic positioning errors, and DVD read or format errors.

    NOTE: A damaged DVD is not covered under warranty unless the disc is damaged by the navigation unit. Damage by the navigation unit typically appears as circular scratches caused by something rubbing against the DVD as it spins. The damage may appear as arcs or complete circles on the DVD reading surface.

  - Verify that the underside of the DVD is silver, and not a copy with a blue color. Copies will not work properly and can cause other symptoms that mimic hardware problems.

- Incorrectly colored DVDs being put into navigation vehicles. This causes the system to either display error messages, or causes system malfunctions that mimic a hardware problem. This results in the client leaving with a malfunctioning navigation system.
- The DVD version provided to the client is out-of date or incompatible with a particular model. This inconveniences your client by delaying the repair, or by causing additional (and unnecessary) returns to your dealership.
- The client experiences bugs or other issues that have already been resolved in later versions currently available at the fulfillment desk.

If the DVD is defective, or has any of the issues mentioned above, return the vehicle to your client and recommend that they order the proper DVD from the Acura Disc Fulfillment Center.

NOTE: Navigation DVDs do not come with replacement navigation units. If you are replacing a navigation unit because it is detective (following appropriate service manual troubleshooting), and the DVD does not eject, order a DVD from the Acura Disc Fulfillment Center.

How to Answer Client Questions About Navigation Coverage

Some clients may ask questions regarding a city, address, or POI (point of interest) covered by the navigation system. It is better to verify a coverage question on an actual vehicle than to disappoint your client by promising coverage that may be incomplete or missing in their area. The following suggestions can be used to answer coverage inquiries from your client.

Is my address covered by the navigation system?

Using a current production vehicle (of the same model), enter the client's address (street first) to see if their area is covered. Always enter the street first, because sometimes their city may be included in a neighboring township, or under some larger metropolitan city name. If the address is shown in a later year vehicle, but not your client's vehicle, you might recommend that your client purchase an update.

Is my city covered by the navigation system?

For general questions about whether a city is covered, view the map coverage link on the DVD order site. On the site, select a year, and select a model, then click on the Coverage link. You then select a state or province, and the cities are listed. This does not guarantee that the client's road or address is in the system. Verifying on an actual production vehicle is always the best guarantee that your information is accurate.

The gas station on my corner is now a restaurant. Why is it still incorrect in the navigation system?

For POI-related client questions, explain that businesses are constantly moving, and there can be a considerable lag in updating the millions of POIs in the system. The database is updated annually, and the best way to the verify whether the POI is accurate is verify the inquiry on a current production vehicle.

Answers to these and other questions regarding coverage can be found in these locations:

- In the Frequently Asked Questions section of the navigation system manual.
- At the online DVD order site, www.acuranavi.com, by clicking on the FAQs link.

How do I find the local address of a business that is part of a national chain (for example, Starbucks)?

There are three ways to find the local address to businesses:

- If you know the phone number of the business, select Phone Number and enter the 10 digit phone number (area code plus seven digit number).
- Select Category, then Restaurant. Enter the keyword Star. The resulting list includes all restaurants that have the letters Star anywhere in the name.
- Select Name and enter Starbucks. For more common business names, like McDonalds, you may have to search through a list that includes other businesses like McDonalds Welding, McDonalds Automotive, etc.

Why are some features different or missing compared to my previous Acura vehicle?

Hardware and software continually go through updates and improvements. Features may change or disappear over time based on the navigation system development.

(cont'd)

General Troubleshooting Information (cont'd)

Precaution on Customer "Sneak Previews"

Your client might request a look (or sneak preview) at features in the latest navigation software. You should never preview a navigation DVD in a client's vehicle. Inserting newer DVD installs the latest software from the DVD into the memory of the client's navigation system. When the original DVD is reinstalled, the newer software remains in memory and is often incompatible with the client's original DVD Map and POI database, or software.

If your client wishes to see the latest navigation coverage or software features, demonstrate it on an in-stock vehicle that already has the latest DVD version.

If a newer version is loaded, either by the dealer or the client, the only remedy is to enter the navigation diagnostic mode's Version screen and do a forced download. Check any official Honda service website for more information about what patches may need reinstalling.

How to Check Error History

Map type

NOTE: The navigation DTCs cannot be retrieved with the HDS.

The Error History feature is to record intermittent navigation issues that occur while the client is using the system. Sometimes the client complaint cannot be duplicated. The error history may record the information needed to diagnose the problem. To check the error history:

1. Start the engine.
2. Press and hold the MAP/GUIDE+MENU+CANCEL buttons for 3 seconds, or connect the SCS service connector to the navigation service connector located in the trunk (see page 23-254).
3. When the Select Diagnosis Items menu is displayed, select Detail Information & Setting.

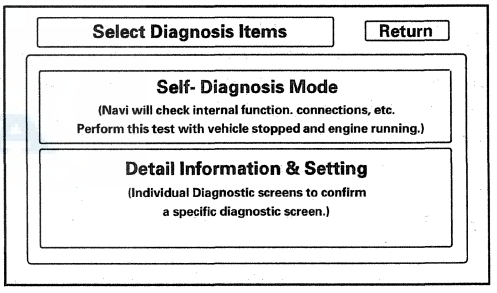

4. When the navigation unit has hard codes, the Error History icon appears yellow when the Self Diagnosis mode (System links) screen is displayed. When no hard errors are stored, the icon appears gray. To view the errors with their DTC codes, select the error history icon.

USA models

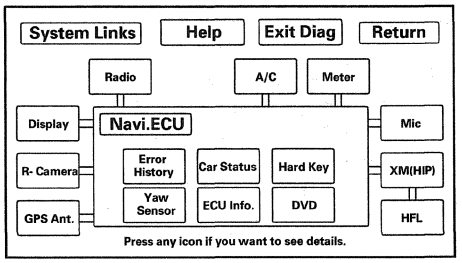

Hawaii models

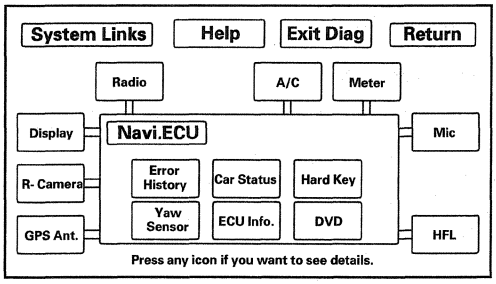

Canada models

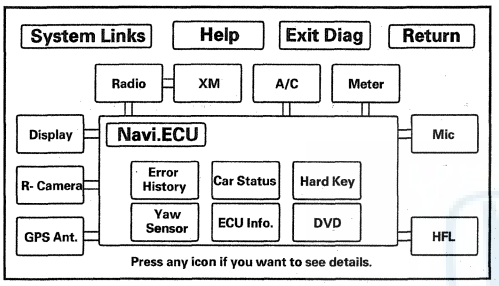

5. Select Hard Error.

NOTE: Soft errors are for factory use only.

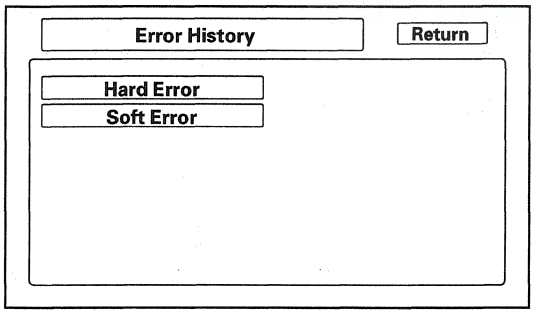

Hardware Error History

6. The Hard Error screen displays the following information for each error:

   - The DTC trouble code for the error
   - A brief description of the DTC code
   - The date and time when the error occurred.

   NOTE:
   - To see additional errors, use the interface dial to select UP or DOWN.
   - Select Clear to delete the error history. The Save feature is for factory use only.

7. Use the DTC Symptom Troubleshooting table to troubleshoot the error.

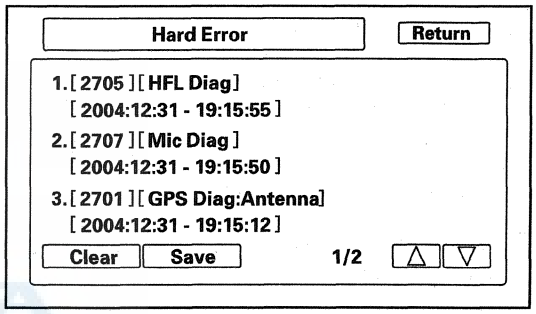

8. Clear the DTCs.

9. Select Return to exit the error history.

Software Error (Soft Error) History

Software errors are not available. They are for factory use only.

(cont'd)

General Troubleshooting Information (cont'd)

How to Clear Error History

1. Do the steps in How to check Error History.
2. Select Clear in the error menu.

NOTE:
- By selecting Clear, all software and hardware errors stored in history are erased at the same time.
- Save is for factory use only.

Hard error history is displayed

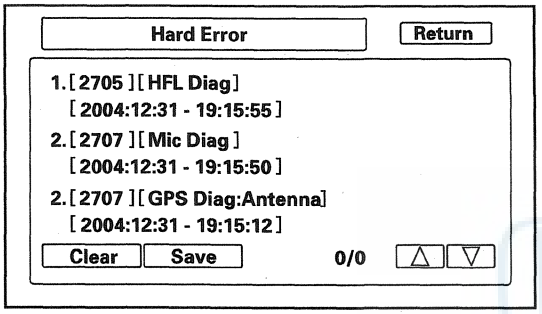

Soft error history is displayed (Soft errors are for factory use only)

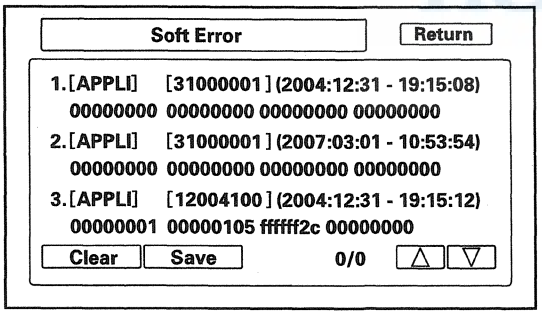

3. After selecting Clear, then selecting Yes, both Hard Error history and Soft Error history are cleared at the same time.

Hard error history clear

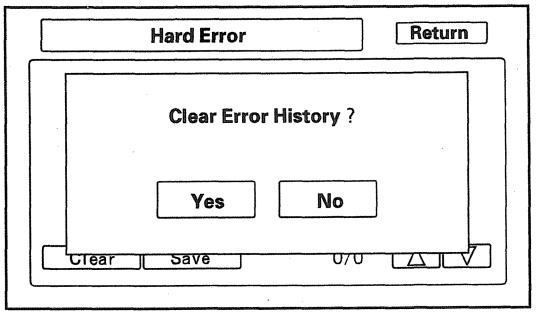

Soft error history clear (Soft errors are for factory use only)

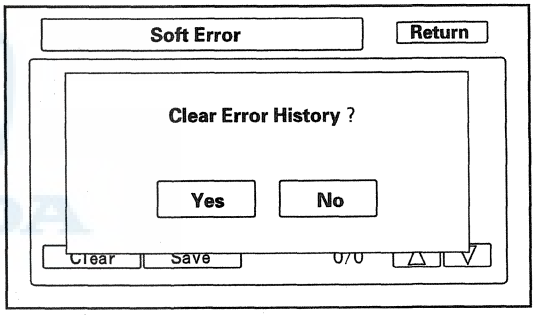

4. Press Return to exit.

DTC Troubleshooting Index

DTC	Description	Circuit	Failure Detection	Page	Also Check For
1001	FROM System Info Error	Flash ROM management	Navigation unit internal data error.	(see page 23-192)	Low or weak battery
1101	Media Bus Send Error	Media condition monitoring	Navigation unit internal media error.	(see page 23-192)	Low or weak battery
1201	DVD High Temp	DVD drive	Navigation unit temperature above the upper limit. Failure in navigation unit fan circuit.	(see page 23-193)	• Low or weak battery • High trunk temperature
1202	DVD Low Temp	DVD drive	Navigation unit temperature below the lower limit.	(see page 23-193)	• Low or weak battery • Low trunk temperature
1301	GPS Antenna Error	GPS Antenna	GPS Antenna circuit malfunction.	(see page 23-194)	Low or weak battery
1302	GPS Receiver Error 1	GPS Receiver	GPS Antenna circuit malfunction. Navigation unit internal GPS receiver malfunction.	(see page 23-195)	Low or weak battery
1303	GPS Receiver Error 2	GPS Receiver	Navigation unit internal GPS receiver malfunction.	(see page 23-196)	Low or weak battery
1304	Gyro Error 1	Gyro	Navigation unit internal Gyro malfunction.	(see page 23-196)	Low or weak battery
1305	Gyro Error 2: ECU Temp XX ℃	Gyro	Navigation unit internal Gyro malfunction.	(see page 23-197)	Low or weak battery
1306	Vehicle Speed Pulse	Vehicle Speed Pulse	VPS circuit malfunction.	(see page 23-197)	FCAN DTCs
1307	DVD Read Error	DVD disc	Scratched/dirty DVD or navigation unit internal DVD ROM drive.	(see page 23-198)	Low or weak battery
1403	Audio Error 3	Display	Mechanical malfunction with navigation display unit.	(see page 23-198)	Low or weak battery
1404	Audio Error 4	DVD	Mechanical malfunction in the CD-DVD player (audio unit).	(see page 23-199)	Low or weak battery
1409	Audio Error 9	XM	XM antenna/circuit malfunction.	(see page 23-202)	Low or weak battery

(cont'd)

DTC Troubleshooting Index (cont'd)

DTC	Description	Circuit	Failure Detection	Page	Also Check For
1701	R-Camera Error	Rear Camera	Communication error between rearview camera and navigation unit (open/short).	(see page 23-199)	
1801	HIP Error	HIP	HIP communication error, open in the wire, or HIP unconnected.	(see page 23-200)	
2601	Display Diag: Connect	Display	GA-NET Bus circuit malfunction open/short. ECU Bus circuit malfunction open/short.	(see page 23-206)	
2602	Display Diag: ROM	Display	Navigation display unit internal malfunction.	(see page 23-209)	
2603	Display Diag: RAM	Display	Navigation display unit internal malfunction.	(see page 23-210)	
2605	H/U Diag: Connect	H/U	GA-NET Bus circuit malfunction open/short.	(see page 23-210)	
2607	XM Diag	XM	GA-NET Bus circuit malfunction open/short. XM antenna circuit malfunction.	(see page 23-212)	
2608	R-Camera Diag	Rear Camera	Rearview camera internal malfunction.	(see page 23-199)	
2609	VRAM Diag	ECU VRAM	Navigation unit internal VRAM malfunction.	(see page 23-213)	
2610	DRAM Diag	ECU DRAM	Navigation unit internal DRAM malfunction.	(see page 23-214)	
2701	GPS Diag: Antenna	GPS	GPS antenna malfunction.	(see page 23-214)	
2702	GPS Diag: Receiver in Navi	GPS	GPS antenna malfunction.	(see page 23-215)	
2703	Aircon Diag	Aircon	Communication Error between climate control unit and navigation unit (open/short).	(see page 23-203)	Check for B-CAN DTCs
2704	HIP Diag	HIP	HIP/HFL COMM1 thru HIP/HFL COMM4 Bus circuit malfunction open/short	(see page 23-215)	Check for B-CAN DTCs
2705	HFL Diag	HFL	HandsFreeLink Control unit internal malfunction.	• With AcuraLink (see page 23-217) • Without AcuraLink (see page 23-219)	Check for B-CAN DTCs
2706	Gyro Diag: ECU Temp XX ℃	Gyro	Navigation unit internal malfunction.	(see page 23-220)	
2707	Mic Diag	Mic	Mic circuit malfunction open/short.	(see page 23-221)	

Symptom Troubleshooting Index

NOTE: Many problems are caused because the remotes have not been "linked." When troubleshooting a complaint, make sure the remotes are linked first.

Symptom	Diagnostic procedure	Also check for
Navigation system stays on the GPS initialization screen	System Initialization (see page 23-121)	• Navigation unit • Low battery voltage • Wrong colored disc installed • GPS antenna/cable • Aftermarket metallic window tint • Harness/fuses/switches
No picture is displayed	Symptom Troubleshooting (see page 23-223)	• Navigation unit • Low battery voltage • Aftermarket accessories connected to the system • Navigation display unit • The wrong color DVD is installed • The DVD is damaged or dirty • Harness/fuses/switches
Vehicle position icon constantly leaves road, moves erratically, or is displayed very far from actual vehicle position	Symptom Troubleshooting (see page 23-225)	• Navigation unit • GPS antenna/cable • Aftermarket metallic window tint • PCM (speed and fuel pulses) • Harness/fuses/switches
Picture is missing a color or tone or is an odd color	Symptom Troubleshooting (see page 23-225)	• Navigation unit • The wrong color DVD is installed • The DVD is damaged or dirty • Navigation display unit • Harness/fuses/switches • Aftermarket accessories connected to the system
Picture has lines or rolls	Symptom Troubleshooting (see page 23-227)	• Navigation unit • Display unit • Harness/fuses/switches
Interface dial buttons do not work	Symptom Troubleshooting (see page 23-228)	• Navigation unit • Navigation display unit • Interface dial • The wrong color DVD is installed • The DVD is damaged or dirty • Harness/fuses/switches
GPS icon is white or not shown	Symptom Troubleshooting (see page 23-230)	• Navigation unit • Aftermarket accessories connected to the system • The DVD is damaged or dirty • GPS antenna/cable • The wrong color DVD is installed • The DVD is damaged or dirty • Aftermarket metallic window tint • Harness/fuses/switches
Voice guidance cannot be heard, is broken up, or there is static	Symptom Troubleshooting (see page 23-230)	• Navigation unit • Volume or Voice feedback settings (see Owner's manual for details) • Audio unit/amplifier • Harness/fuses/switches
Voice control does not work/respond	Symptom Troubleshooting (see page 23-231)	• Navigation unit • Microphone/voice control switch • The wrong color DVD is installed • The DVD is damaged or dirty • Harness/fuses/switches
DVD read error messages	Symptom Troubleshooting (see page 23-234)	• Navigation unit • Low battery voltage • Wrong colored disc installed • Damaged DVD • Navigation display unit • The wrong color DVD is installed • The DVD is damaged or dirty
Navigation cannot control HVAC by voice command	Symptom Troubleshooting (see page 23-234)	• HVAC control unit • Navigation display unit • The wrong color DVD is installed • The DVD is damaged or dirty • Harness/fuses/switches

(cont'd)

Symptom Troubleshooting Index (cont'd)

Symptom	Diagnostic procedure	Also check for
Display day/night mode does not work or does not work properly	Symptom Troubleshooting (see page 23-235)	• Navigation display unit • HVAC control unit • Display brightness set to High • Gauge control module (CAN communication) • The wrong color DVD is installed • The DVD is damaged or dirty • Harness/fuses/switches
System locks up or freezes constantly	Symptom Troubleshooting (see page 23-236)	• Navigation unit • Low battery voltage • Harness/fuses/switches • Wrong colored disc installed • Damaged DVD • The wrong color DVD is installed • The DVD is damaged or dirty
Vehicle icon wanders across the map when driving (does not follow a displayed road) or map or vehicle ICON spins	Symptom Troubleshooting (see page 23-236)	• Navigation unit • GPS antenna/cable • Aftermarket metallic window tint • PCM • Wrong colored disc installed
Navigation system does not Map Match	Refer to troubleshooting for vehicle icon wanders across the map when driving (see page 23-236).	
Navigation system does not accept security code	Symptom Troubleshooting (see page 23-237)	
Navigation display stays on with ignition switch in LOCK (0)	Symptom Troubleshooting (see page 23-238)	
Navigation cannot control audio system	Symptom Troubleshooting (see page 23-239)	• Harness/fuses/switches • Low battery voltage • The wrong color DVD is installed • The DVD is damaged or dirty • Aftermarket accessories connected to the system
Navigation cannot control XM radio	Symptom Troubleshooting (see page 23-239)	• Display unit • Wrong colored disc installed • The wrong color DVD is installed • The DVD is damaged or dirty • Harness
Navigation frequently asks for anti-theft code and/or needs GPS initialization	Symptom Troubleshooting (see page 23-240)	• Navigation unit • Low battery voltage • Harness/fuses/switches
Traffic or Weather information is not shown on map screen	Symptom Troubleshooting (see page 23-241)	• AcuraLink (XM) • Navigation unit • Harness
Trip computer-no distance	Symptom Troubleshooting (see page 23-247)	• PCM (speed and fuel pulses) • Harness/fuses/switches
Trip computer-no fuel information	Symptom Troubleshooting (see page 23-247)	• Gauge control module (CAN communication) • Harness/fuses/switches
Rearview camera image does not come on or work properly	Symptom Troubleshooting (see page 23-248)	• Software for the latest up-dates • Low battery voltage • No backup signal • Wrong disc installed in navigation unit
Navigation does not call using the HFL	Symptom Troubleshooting (see page 23-251)	The wrong colored DVD or version is installed
A POI cannot be found	See How to answer client questions about navigation coverage (see page 23-124)	The DVD is scratched or dirty
A specific city cannot be found	See How to answer client questions about navigation coverage (see page 23-124)	The DVD is scratched or dirty
Address cannot be found or system gives poor routing	Verify proper operation using the owner's manual	• Compare to another like vehicle • Wrong colored disc installed
Previous Destinations button is dim and not selectable in the Enter destination by screen (grayed-out)	The vehicle may be new, or the client deleted the destination. Enter a destination, and allow the system to route to it. After the trip, the Previous Destinations button will be selectable.	
The map will not display the Southern portion of the U.S. or the Northern parts of Canada	North American coverage is different for U.S./Canada markets. See the Version Diagnostic Screen (see page 23-186) for details on coverage differences.	
Time is not correct	Reset Time Adjustment in set-up.	
Today's Destinations button is dim and not selectable in the Enter destination by screen (grayed-out)	The client has not entered a group of locations for Today's Destinations. This is normal. The button is only selectable if the client is using this function.	
Navigation unit will not eject or accept the navigation DVD	Symptom Troubleshooting (see page 23-253)	



System Description

Overview

The navigation system is a highly-sophisticated, hybrid locating system that uses satellites and a map database to show where the vehicle is to help guide you to a desired destination.

The navigation system receives signals from the global positioning system (GPS), a network of 24 satellites in orbit around the earth. By receiving signals from several of these satellites, the navigation system can determine the latitude, longitude, and elevation of the vehicle. In addition, signals from the system's yaw rate sensor and the PCM (vehicle speed pulse) enable the system to keep track of the vehicle's direction and speed of travel.

This hybrid system has advantages over a system that is either entirely self-contained or one that relies totally on the GPS. For example, the self-contained portion of the system can keep track of vehicle position even when satellite signals cannot be received. When the navigation system is on, the GPS can keep track of the vehicle position even when the vehicle is transported by ferry.

The navigation system applies all location, direction, and speed information to maps and calculates a route to the destination entered. As you drive to that destination, the system provides both visual and audio guidance.

This navigation system also has voice recognition that allows voice control of most of the navigation functions. The Navigation TALK and BACK buttons on the steering wheel activate the voice control. The voice control also allows control of the audio and climate functions.

The illumination signal (headlights ON) is used by the navigation unit to automatically switch the display between Night and Day brightness modes when display is set to Auto. When the instrument panel is set to night and the brightness control is set to full brightness (hold both + and — key at the same time), the navigation system stays in the day mode, even with the headlights on.

The GA-NET II bus passes information back and forth between the display panel control unit, the navigation unit and the audio system, The information passed on this bus are audio and climate control settings directed by the navigation unit.

The Comm. Bus connects the HFL, XM (AcuraLink), and navigation units. This bus supports these functions:

- The navigation control unit receives traffic, weather and message information from the AcuraLink Control unit.
- If a POI phone number is available, the navigation control unit sends the phone number (Calculate route to screen) to the HFL for dialing.
- If vehicle problems are detected, and the client's cellular contract includes data service (the vehicle must also have an approved bluetooth phone paired and configured correctly), then the HFL can send vehicle data to the HFL unit for transmitting back to the AcuraLink servers.
- The AcuraLink server can pass additional problem details back through the HFL, to the AcuraLink Control unit, and finally to the navigation unit for display.

(cont'd)

System Description (cont'd)

System Diagram

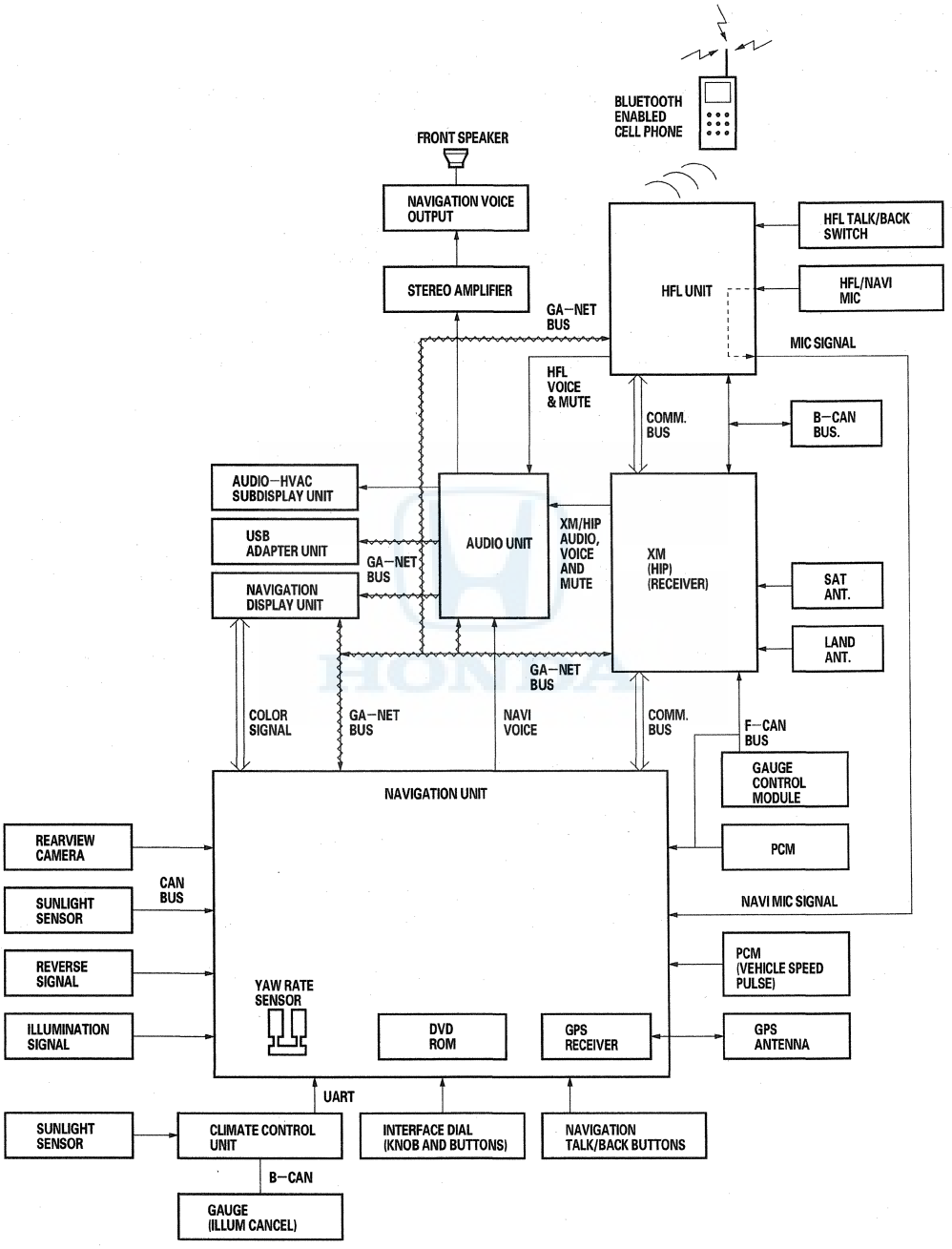

Navigation Function

The navigation system is composed of the navigation unit, the PCM (vehicle speed signal), the GPS antenna, the microphone, the voice control switch, the audio unit, the audio-HVAC sub display unit.

Function Diagram

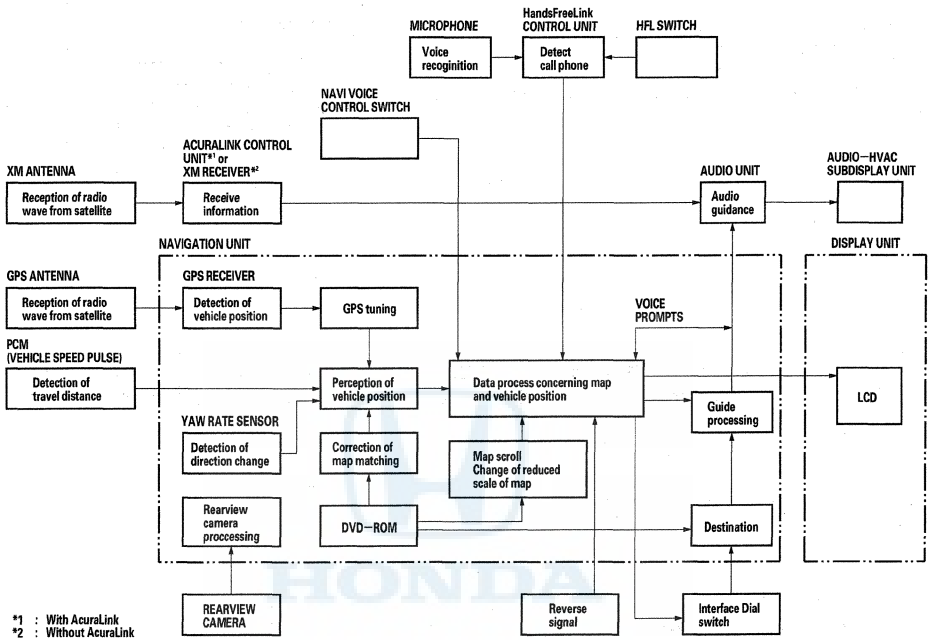

GA-Net Bus Configuration

The GA-Net bus passes audio and navigation commands throughout the navigation and audio components. These commands include navigation audio/XM selections by voice, and XM station and music title names. Because the entire bus is interconnected between components, an open or short in the GA-Net bus harness may cause any or all of these functions to become inoperative.

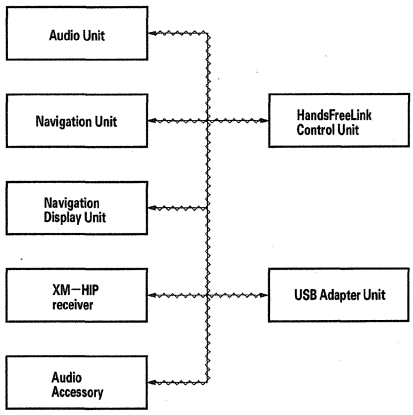

(cont'd)

System Description (cont'd)

Vehicle Speed Pulse
The vehicle speed pulse is sent by the PCM. The PCM receives a signal from the countershaft speed sensor, then processes the signal and transmits it to the speedometer and other systems.

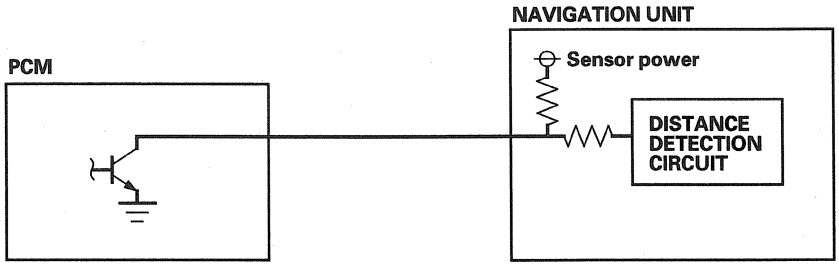

Trip Computer
The navigation system displays trip computer information that is calculated by the gauge assembly and sent to the navigation unit via F-CAN bus. The navigation system dose not calculate or track any trip computer functions, it only displays the information.

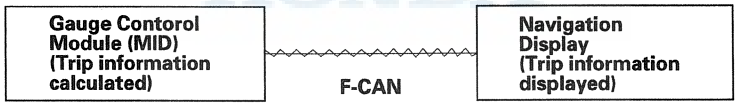

Yaw Rate-Lateral Acceleration Sensor
The yaw rate-lateral acceleration sensor (located in the navigation unit) detects the direction change (angular speed) of the vehicle. The sensor is an oscillation gyro built into the navigation unit.

Sensor Element Structure
The sensor element is shaped like a tuning fork, and it consists of the piezoelectric parts, the metal block, and the support pin. There are four piezoelectric parts: one to drive the oscillators, one to monitor and maintain the oscillation at a regular frequency, and two to detect angular velocity. The two oscillators, which have a 90-degree twist in the center, are connected at the bottom by the metal block and supported by the support pin. A detection piezoelectric part is attached to the top of each oscillator. The driving piezoelectric part is attached to the bottom of one oscillator, and the monitoring piezoelectric part is attached to the bottom of the other oscillator.

Oscillation Gyro Principles
The piezoelectric parts have electric/mechanical transfer characteristics. They bend vertically when voltage is applied to both sides of the parts, and voltage is generated between both sides of the piezoelectric parts when they are bent by an external force. The oscillation gyro functions by utilizing this characteristic of the piezoelectric parts and Coriolis force. (Coriolis force deflects moving objects as a result of the earth's rotation.) In the oscillation gyro, this force moves the sensor element when angular velocity is applied.

Operation
1. The driving piezoelectric part oscillates the oscillator by repeatedly bending and returning when an AC voltage of 6 kHz is applied to the part. The monitoring-side oscillator resonates because it is connected to the driving-side oscillator by the metal block.
2. The monitoring piezoelectric part bends in proportion to the oscillation and outputs voltage (the monitor signal). The navigation unit control circuit controls the drive signal to stabilize the monitor signal.
3. When the vehicle is stopped, the detecting piezoelectric parts oscillate right and left with the oscillators, but no signal is output because the parts are not bent (no angular force).
4. When the vehicle turns to the right, the sensor element moves in a circular motion with the right oscillator bending forward and the left oscillator bending rearward. The amount of forward/rearward bend varies according to the angular velocity of the vehicle.
5. The detecting piezoelectric parts output voltage (the yaw rate signal) according to the amount of bend. The amount of vehicle direction change is determined by measuring this voltage.

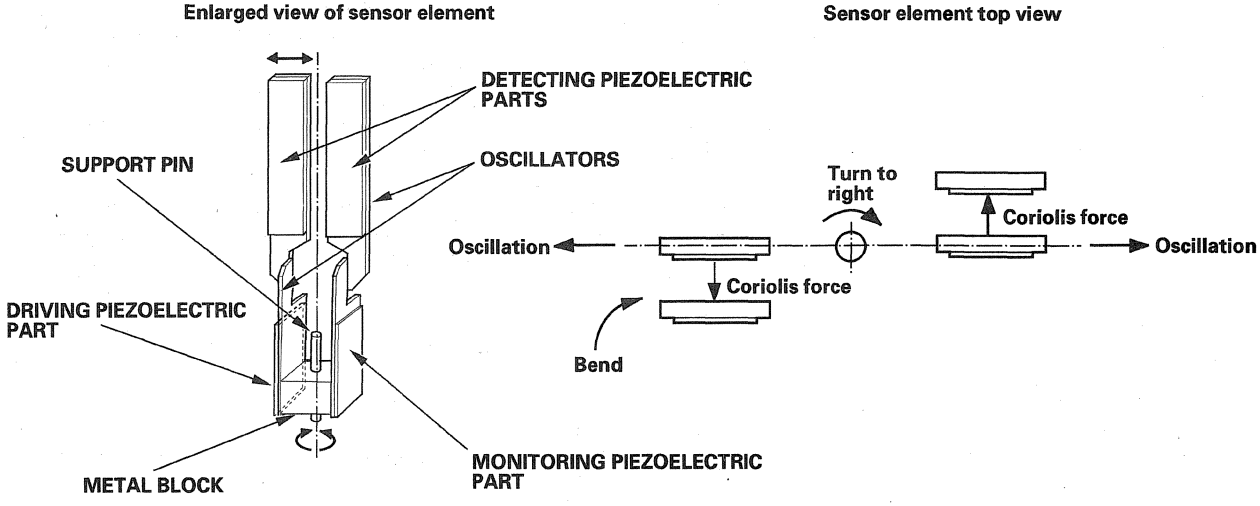

(cont'd)

System Description (cont'd)

Global Positioning System (GPS)
The global positioning system (GPS) enables the navigation system to determine the current position of the vehicle by using the signals transmitted from the satellites in orbit around the earth. The satellites transmit the satellite identification signal, orbit information, transmission time signal, and other information. When the GPS receiver receives a signal from four or more satellites simultaneously, it calculates the current position of the vehicle based on the distance to each satellite and the satellite's position in its respective orbit.

Position detection Image with GPS satellite

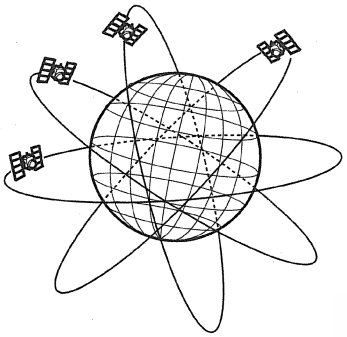

NOTE: Four satellites on each of 6 orbits.

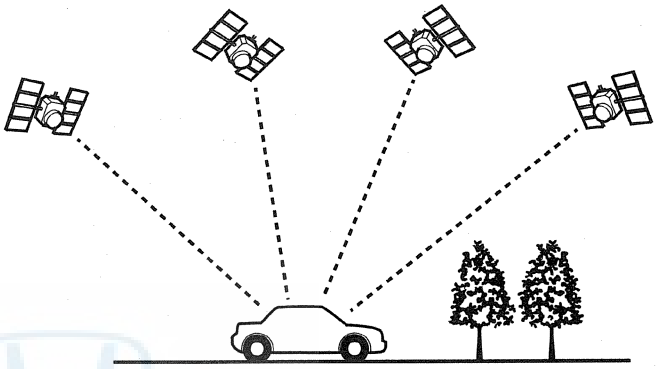

Precision of GPS
The precision of the GPS varies according to the number of satellites from which signals are received and the view of the sky. The accuracy is indicated by the color and shape of the GPS icon shown on the display.

GPS ICON COLOR	NUMBER OF SATELLITES	CONDITION	DESCRIPTION
No GPS icon	None	Faulty reception	The GPS can't be utilized due to a faulty GPS receiver, open in the wire, or other fault or interference.
	2 or less	Impossible to detect vehicle position	GPS function is normal. The satellite signals received by the GPS are too few to detect the vehicle position.
White GPS icon	3	Vehicle position detectable in 2 dimensions	The longitude and latitude of the vehicle position can be detected. (Less precise than detection in three dimensions)
Green GPS icon	4 or more	Vehicle position detectable in 3 dimensions (elevation displayed)	The longitude, latitude and the altitude of the vehicle position can be detected. (More precise than detection in two dimensions)

GPS Antenna
The GPS antenna amplifies and transmits the signals received from the satellites to the GPS receiver.

GPS Receiver and Clock
The GPS receiver is built into the navigation unit. It calculates the vehicle position by receiving the signal from the GPS antenna. The current time, vehicle position, and signal reception condition is transmitted from the GPS receiver to the navigation control unit to adjust vehicle position. The clock in the subdisplay uses the clock information sent from the navigation unit.



Navigation Unit
The navigation unit calculates the vehicle position and guides you to the destination. The unit performs map matching correction, GPS correction, and distance tuning. It also controls the menu functions and the DVD-ROM drive, and interprets voice commands. With control of all these items, the navigation unit makes the navigation picture signal, then it transmits the signal to the display panel control unit and audio driving instructions to the audio unit.

Calculation of Vehicle Position
The navigation unit calculates the vehicle position (the driving direction and the current position) by receiving the directional change signals from the yaw rate sensor and the travel distance signals from vehicle speed pulse (VSP) signal of the PCM.

Map Matching Tuning
The map matching tuning is accomplished by indicating the vehicle position on the roads on the map. The map data transmitted from the DVD-ROM is checked against the vehicle position data, and the vehicle position is indicated on the nearest road. Map matching tuning does not occur when the vehicle travels on a road not shown on the map, or when the vehicle position is far away from a road on the map.

GPS Tuning
The GPS tuning is accomplished by indicating the vehicle position as the GPS's vehicle position. The navigation unit compares its calculated vehicle position data with the GPS vehicle position data. If there is large difference between the two, the indicated vehicle position is adjusted to the GPS vehicle position.

Distance Tuning
The distance tuning reduces the difference between the travel distance signal from the VSP and the distance data on the map. The navigation unit compares its calculated vehicle position data with the GPS vehicle position data. The navigation unit then decreases the tuning value when the vehicle position is always ahead of the GPS vehicle position, and it increases the tuning value when the vehicle position is always behind the GPS vehicle position.

Traffic Information
The Acura navigation system's real-time traffic feature helps you avoid traffic by providing up to the minute traffic information in 77 major metropolitan areas across the 48 contiguous states in the USA. Color coded freeways appear on the navigation screen, displaying current traffic flow, and/or the locations of accidents and traffic conditions affected by construction and weather. The information is aggregated by NAVTEQ™ from multiple sources, including highway patrol accident reports and transportation departments. It is then transmitted by XM® Radio satellites to the Acura RL and continuously updated. Real-time traffic data services are offered on a subscription basis for a nominal fee following the 90-day free trial period.

Weather Information
The Acura navigation system's weather information option allows you to view the weather forecast, warning list, and warning map.

(cont'd)

System Description (cont'd)

Route Guidance
The navigation unit can calculate different routes to a selected destination. You have five options:
- Direct Route—Calculate a route that is the most direct.
- Easy Route—Calculate a route that minimizes the number of turns needed.
- Minimize Freeways—Calculate a route that avoids freeway travel. If that is not possible, keep the amount of freeway travel to a minimum. This is not selectable (button grayed out) for trips greater than 100 miles.
- Minimize Toll Roads—Calculate a route that avoids, or minimizes travel on toll roads. This is not selectable (button grayed out) for trips greater than 100 miles.
- Maximize Freeways—Calculate a route that uses freeways as much as possible.

Audio Guidance
The navigation unit transmits audio driving instructions before entering an intersection or passing a junction. The audio instructions come through the audio unit to the front speakers.

NOTE: The front speakers are muted whenever the navigation system is giving guidance commands, and all of the speakers when the voice control system is being used.

Muting Signal Logic
The audio muting logic is orchestrated by the audio unit. The audio unit determines what audio source has priority to use the speakers.

The priority of the audio sources is as follows:

HFL has the highest priority, followed by navigation, and finally the radio/CD-DVD player. The priority is passed by HFL to the audio unit by dedicated mute wires. The navigation mute signal is passed to the stereo amplifier.

The navigation unit temporarily disables the voice control buttons, but allows guidance to be heard. In addition, the audio unit suppresses the output from the audio unit, XM receiver, disc player, or other audio accessories.

When the navigation system sends out a voice route guidance command, the audio front speaker is muted, and the navigation voice is heard in the front speakers.

When the navigation voice control system is in use, all of the speakers are muted, and the navigation voice prompts are heard from the front speakers.

Solar Angle
The climate control unit system uses the sun's angle, along with the sunlight sensor to control the driver/passenger A/C air flow.

Off Road Tracking (bread-crumbs)
Off road tracking dots that can be followed on the map retrace your route back to a mapped (digitized) road.

Clock and Time Zone
The clock set up allows you to set daylight savings time, auto time zone, and time adjustment.

DVD-ROM
The DVD includes:
- Map Data
- Point of interest (POI)
- Navigation software

Audio Unit
The audio unit receives the voice guidance instructions from the navigation unit and transmits the instructions through the front speaker even when the audio system is in use.

NOTE: If the navigation volume and/or voice feed back is turned off, this feature is disabled.

Display Unit
The display unit uses a liquid crystal display (LCD). The LCD is a 8-inch-diagonal, thin film transistor (TFT), strip type with 336,960 picture elements. The color film and fluorescent light are laid out on the back of the liquid crystal film.

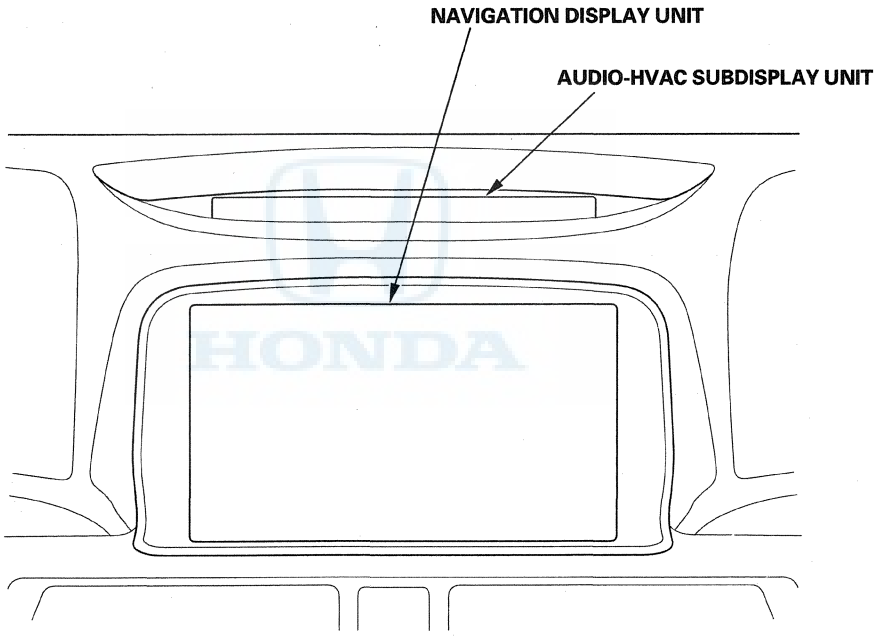

(cont'd)

System Description (cont'd)

Microphone (Mic)
Receives voice commands and transmits them to the navigation unit or HandsFreeLink control unit or active noise cancellation (ANC) for interpretation.
These systems share the same microphone.

NAVIGATION TALK Button
Activates the voice control system in the navigation unit to accept voice commands.

NAVIGATION BACK Button
Returns the display to the previous screen (similar function as the CANCEL button).

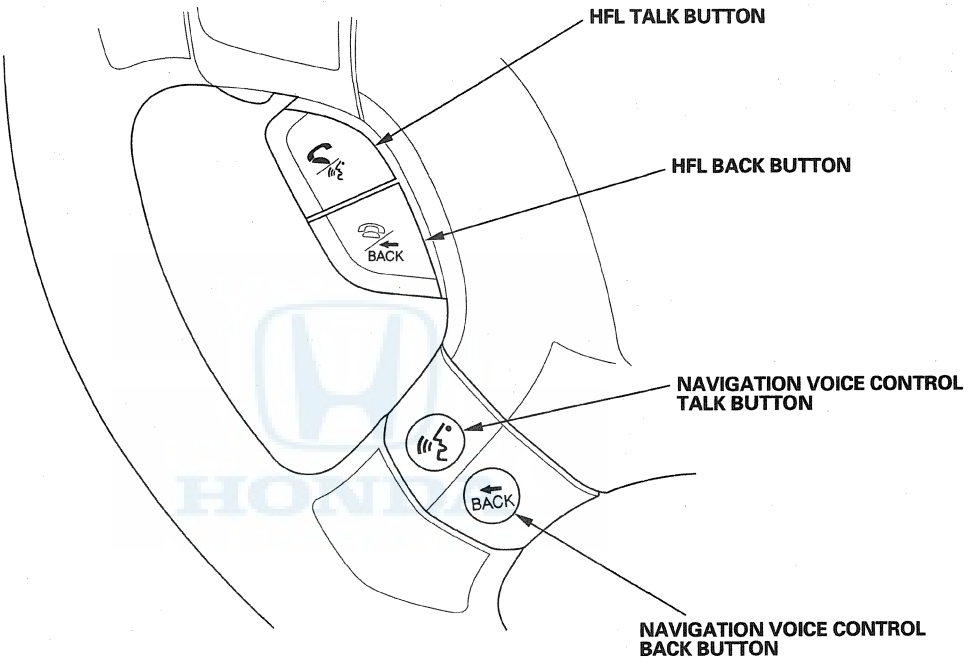

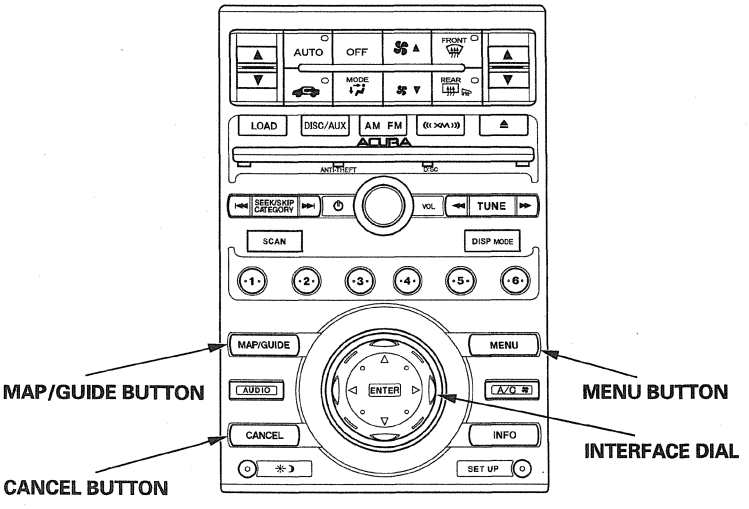

Glossary
The following is a glossary of terms pertaining to the Voice Recognition Navigation System.

NOTE: All item may not apply to this vehicle. See the navigation system manual for more information.

Item	Definition
AcuraLink	This device receives information from the XM satellites and passes XM audio information to the audio unit. In addition, traffic and weather information is sent to the navigation unit.
ANC (Active Noise Cancellation)	See audio section.
Address Book	The HFL system can import a copy of the phone book from and approved HFL compatible phone and can display the imported phone book on the navigation screen as the address book. See the Owner's Manual for more information.
B-CAN	Body CAN Bus (see CAN)
Bluetooth	Bluetooth is a short-range wireless technology intended to replace cables connecting portable devices (like cell phones) to the audio system (Bluetooth audio) or the HFL (Hands free phone use).
Bluetooth audio	See audio section
Bread-crumbs (White dots)	Off road tracking dots that can be followed on the map to retrace your route back to a mapped (digitized) road. This function can be turned on/off in Setup screen 1.
CAN	Controller Area Network. This communication network allows processors in the vehicle to send/receive information. The fuel pulses used by the MID trip computer are received from the ECM/PCM using the F-CAN (Fast Controller Area Network) bus.
CPU	Central Processing Unit. The main device within the navigation unit that coordinates the rest of the electronic functions.
CSS	Countershaft (Output) Speed Sensor. This sensor reads the output shaft speed at the transmission and provides a speed pulse to the ECM/PCM.
Database	This consists of the Map data, and the POI (Points Of Interest) data stored on the DVD.
DBW	Drive By Wire. Allows electrical control of the throttle without the need of a mechanical linkage.
DCA	Detailed Coverage Area. Main metropolitan areas in the Lower 48 states, and Canada are mapped to this level. See the Navigation Owner's manual for a list of these areas.
DTC	Diagnostic Trouble Codes. Use the HDS tablet to obtain, and troubleshoot the cause of these codes.
Dead Reckoning	The use of the speed signal, and yaw rate sensor to position the vehicle on the map even when tall buildings, or driving in a tunnel obscures the GPS signal.
Digitized Road	A road that appears on the navigation screen. The road name will appear at the bottom of the navigation screen. If the user drives off road the navigation system displays, "Not on a digitized road", and after 1/2 mile, the breadcrumbs appear.
Disclaimer Screen	Screen containing cautionary information. It is meant to be read carefully, and acknowledged by the client when using the navigation system.
DVD or DVD-ROM	Digital Versatile Disc. The navigation program and database resides on this disc. See the Navigation Owner's Manual for information on how to order a replacement or an update DVD.
Dynamic Route Guidance	Uses real-time traffic to change your driving route to help avoid extended traffic delays and incidents. Requires a data package subscription.
ECM	Engine Control Module. Typically referred to as the ECM.
FAQ	Frequently Asked Questions. See the Navigation Owner's Manual for a list of the customer FAQs, and troubleshooting information.
F-CAN	Fast CAN Bus (see CAN)

(cont'd)

System Description (cont'd)

Item	Definition
GA-Net	The GA-Net allows the audio unit to communicate with all the audio and navigation components in a vehicle. If there is an open in the GA-Net, components or the entire audio and navigation system may appear inoperative.
GPS	Global Positioning System. A network of 24 satellites in orbit around the earth. The navigation system can simultaneously receive signals from up to 12 satellites to accurately position the vehicle on the map.
HDS	Honda Diagnostic System. A hand held tablet PC used for in diagnosing vehicle problems. This device can be used to obtain DTC codes for diagnosis of the navigation system and CAN related problems.
HIP (AcuraLink)	This device receives information from the XM satellites and passes XM audio information to the audio unit. In addition, traffic information is sent to the navigation unit.
HFL	HandsFreeLink uses Bluetooth technology as a wireless link between it and an approved Bluetooth compatible cell phone. See the vehicle Owner's manual or Quick Start Guide for more information.
H/U	Head Unit. The navigation system display assembly in the dash.
Initialization	This refers to the period needed to re-acquire the GPS satellite orbital information whenever the navigation system power has been disconnected. This can take from 10 to 45 minutes.
Interface Dial	This control device consists of a rotating knob and the buttons surrounding it. This device allows control of the navigation, audio, and climate functions displayed on the screen.
Jog Dial	See interface dial.
LCD	Liquid Crystal Display (the navigation screen)
Map Matching	The received GPS information allows the navigation system to position the vehicle on the map. Map matching has occurred if the map screen displays the current street name in the bottom-shaded area.
Mic	Abbreviation for the microphone used for receiving voice commands. The ANC unit may also use it to check its turning (if equipped). It is located near the map light in the ceiling.
MID	Multi-Information Display
MP3 music files	MP3 is an audio coding formal. MP3 is popular audio compression format on the internet and computers. CDs and PC cards MP3 music files can be played on some vehicle audio systems.
MW	Maneuver Window. While on-route to a destination, this window displays information about the next maneuver.
Navi	Abbreviation for the Navigation System.
Off-Road Tracking	See Breadcrumbs
Off Route	This occurs when the user leaves mapped roads. Off road tracking dots (breadcrumbs) are displayed if the option is enabled in the setup menu. The user can use them to return to a mapped road. The bottom of the navigation screen displays "Not on a digitized road"
Outlying Areas	These are rural areas that typically have only their main roads mapped. All other roads are shown in light brown for reference only since they have not been verified.
Paired	Linking your cell phone to the HFL
PC Card Slot	The PC Card (PCMCIA, type II) slot is for factory use only. Make sure that the sliding door is closed at all items, if opened, an error message is displayed on the screen (if equipped).
PCM	Powertrain Control Module. This unit supplies the navigation system speed signal, and charge signal via the F-CAN network. Also referred to as ECM.
PCMCIA	A computer industry defined term referring to the PC Card slot standard.

Item	Definition
PIN	Personal Identification Number, a random 4 digit number created by the client to protect personal information.
POI	Point Of Interest. These are the businesses, schools, etc. found under the places option on the main menu.
Polygon	Colored areas on the map screen denoting parks, schools, etc. Refer to the Navigation System Manual "Driving to Your Destination" for a list of the assigned colors.
QWERTY	Keyboard layout resembling the typewriter keys. The keyboard layout can be changed to an alphabetical layout in the Setup mode.
SCS service connector	The service check signal 2-pin connector used to put the navigation system into the diagnostic mode.
Security Code	Code needed to activate the navigation system. You can get the security code from the iN by entering the navigation unit serial number. You can find the serial number on the diagnostic screens (Unit Check, Navi ECU) or on the underside of the navigation unit.
Touch Screen Buttons or Touch Sensor	Audio-HVAC display panel has 2 layers of clear film on the screen panel. If you touch the screen panel, the film layers engage and the display unit detects the touch point.
Tuning	A continual update of internal navigation system scaling factors. See the individual sensor tuning discussions under either System Description, or System Diagnostic Mode (see page 23-164) in this manual.
Unverified Streets	These streets have not been verified for turn restrictions, one-way, etc. They appear light brown on the map. You can enter address destinations in these areas, but depending on your Unverified Routing choice in setup, voice guidance may end at the last verified street closest to your destination.
USB jack	Allows the client to play data such as input audio recording from portable audio devices (such as i-pod) or data from USB flash memory.
Verified Streets	These streets consist of the detailed metropolitan coverage areas, and all other inter-town connection roads. These roads are shown in black on the map.
VP	Vehicle Position. When in map mode, this circular icon shows the vehicle position on the map. Touch this icon to show the latitude, longitude, and elevation of your current position.
VR	Voice Recognition. This allows voice control of many of the navigation functions. The hardware consists of the microphone, voice control switch (Talk/ Back buttons), and the front speakers. See the overview for more information.
VSP	Vehicle Speed Pulse. This pulse signal coming from the PCM (via the CSS) is used to update the Vehicle position on the map. These pulses do not indicate direction (forward or backward). When in reverse, the navigation receives a signal and directs the VP to move backwards on the map.
Weather Information	The navigation system receives and displays weather information.
XM	This device receives information from the XM satellites and passes XM audio information to the audio unit. In addition, traffic information is sent to the navigation unit (see AcuraLink).
Yaw Sensor	This device is located in the navigation unit and senses the side-to-side twisting force generated when the vehicle turns. See a detailed description of how this sensor works in this manual.

(cont'd)

System Description (cont'd)

Diagnostic System Diagram
This diagram below shows all of the navigation diagnostic features available for system troubleshooting. The diagram starts at the center, and works outward in layers.

Access to the diagnostic features begins by starting the vehicle. This is necessary so the system can check the other systems connected by various busses. After starting the vehicle you can enter the diagnostic mode either by pressing and holding MENU + MAP/GUIDE + CANCEL, or by connecting the 2-PIN SCS connector.

The main menu screen allows 2 checking modes - one automatic, and one manual:

- The automatic diagnostic check starts when you select "SELF DIAGNOSTIC MODE". The system runs for several seconds, and reports any issues with Red icons. Rotate the interface dial and select the icon you wish obtain the problem details.
- The manual diagnostic check is selected from the main menu by selecting "DETAIL INFORMATION AND SETTING". The traditional diagnostic menu is displayed. This allows you to obtain additional details as instructed in the troubleshooting procedures.

NOTE: Do not clear or change settings unless specified by either the Service Manual troubleshooting procedures or by the factory. Otherwise, you may accidentally delete customer information, or remove the latest flash software version installed by the factory.

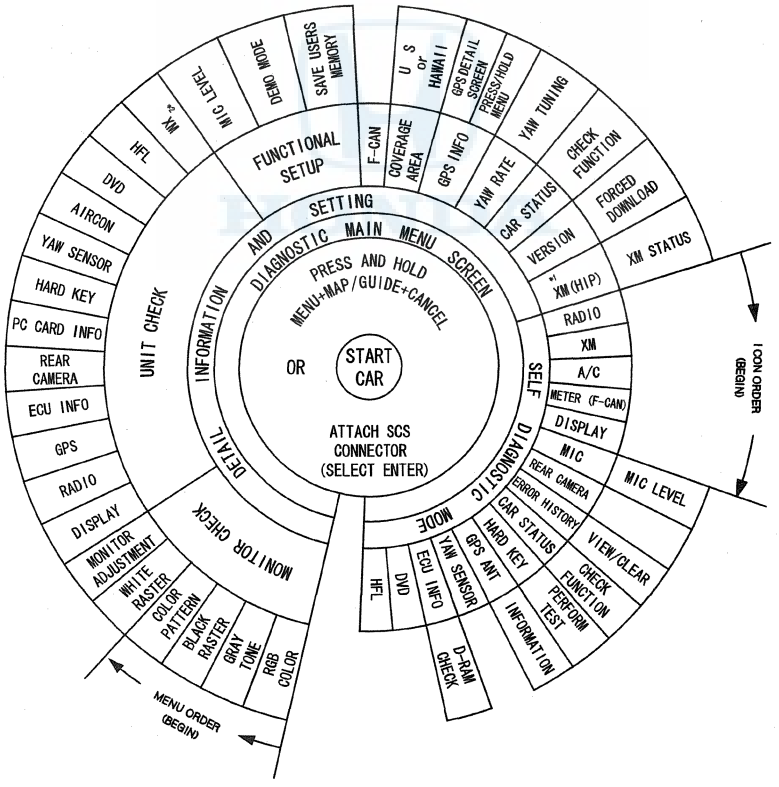

***1: With AcuraLink**
***2: Without AcuraLink**

Navigation unit connectors

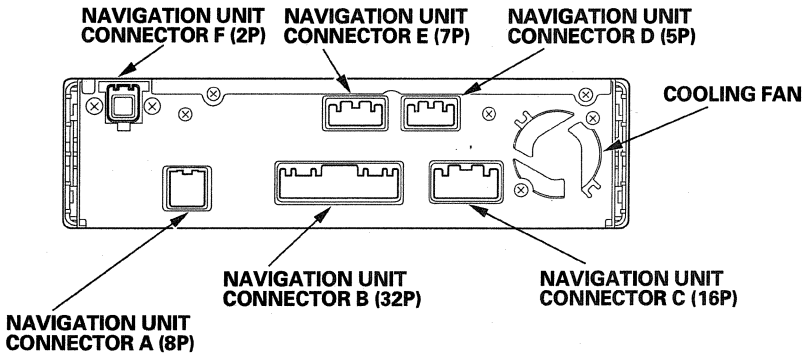

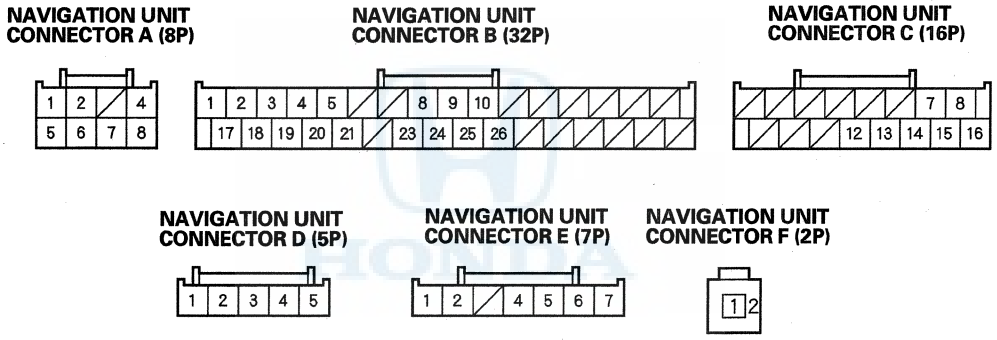

All connectors show wire side of female terminals

(cont'd)

System Description (cont'd)

Navigation display unit 20P connector

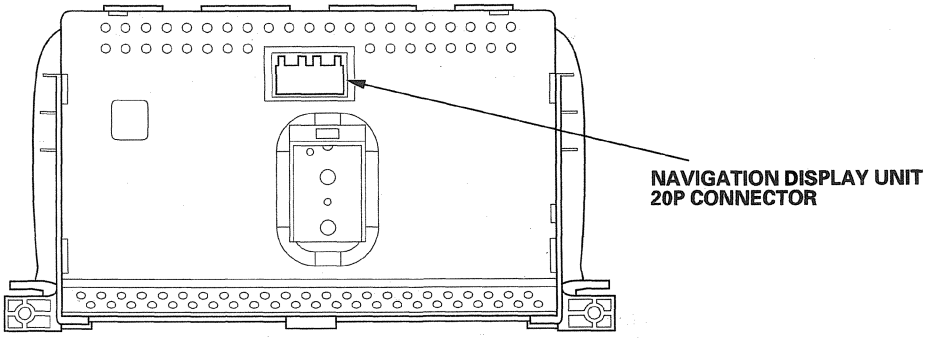

NAVIGATION DISPLAY UNIT 20P CONNECTOR

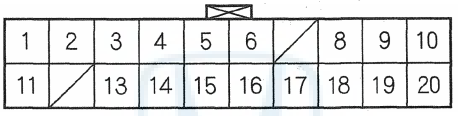

Wire side of female terminals

Interface dial 5P connector

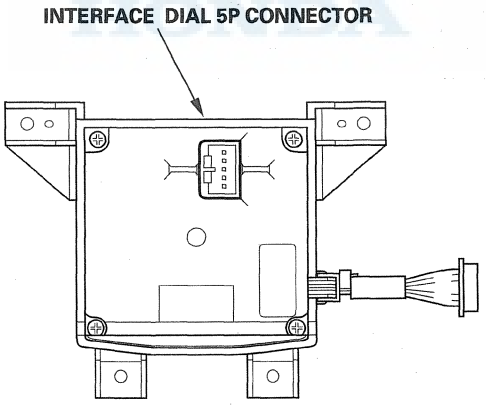

INTERFACE DIAL 5P CONNECTOR

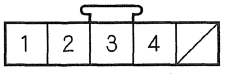

Wire side of female terminals

Navigation Unit Inputs and Outputs

NAVIGATION UNIT CONNECTOR A (8P)

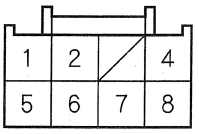

Wire side of female terminals

Navigation Unit Connector A (8P)

Terminal Number	Wire Color	Terminal Name	Description	Voltage (about)	Symptom
1	WHT	+B (+B Power source)	Continuous power source	Battery voltage	If open: Display picture goes out (display back light still on). NOTE: System will reboot to enter code screen. If short to ground: Blows fuse No. 5 (7.5 A) in the driver's under-dash fuse/relay box.
2	PUR	ACC (Accessory)	Power source for accessories	Battery voltage at ACC (I)	If open: Display picture goes out (display back light still on). If short to ground: Blows fuse No. 32 (10 A) in the driver's under-dash fuse/relay box.
4	BLK	GND (Ground) (G602)	Ground for navigation unit	0 V	If open: No effect on system. If short to ground: No effect on system.
5	BRN	BACK LT (Back light or reverse signal)	Reverse signal of select lever from Multiplex Integrated Control Unit	In reverse, battery voltage: Otherwise 0 V	If open: Navigation never sees reverse. Diagnostic screen Car Status, Back=0. If short to ground: Blows fuse No. 21 (10 A) in the driver's under-dash fuse/relay box.
6	BLU	VSP (Vehicle speed pulse)	Vehicle speed pulse signal from PCM	0—5 V pulses average 2.5 V (Depending on bus traffic)	If open: No vehicle speed pulses. Diagnostic screen Car Status, VSP Navi=0. If short to ground: No vehicle speed pulses. Diagnostic screen Car Status, VSP Navi=0.
7	GRN	DIAG+ (Diagnostic positive)	Service check signal for navigation system	5—6 V	If open: No effect on system. If short to ground: System goes into diagnostic mode at key ON (I) and (II).
8	YEL	DIAG— (Diagnostic negative)	Ground for service check signal	0 V	If open: The system will not go into diagnostic mode when using the SCS jumper. If short to ground: No effect on system.

(cont'd)

System Description (cont'd)

Navigation Unit Inputs and Outputs

NAVIGATION UNIT CONNECTOR B (32P)

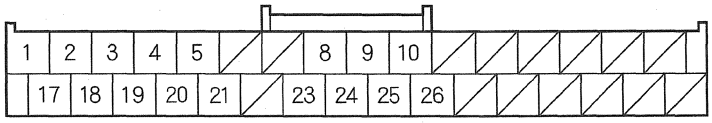

Wire side of female terminals

Navigation Unit Connector B (32P)

Terminal Number	Wire Color	Terminal Name	Description	Voltage (about)	Symptom
1	WHT	R SIG 1 (Red signal)	Red color signal	0.7 V AC average in RGB color diagnostic mode	If open: Red color missing (see RGB Color diagnostic). If short to ground: Red color missing (see RGB Color diagnostic).
2	RED	G SIG 1 (Green signal)	Green color signal	0.7 V AC average in RGB color diagnostic mode	If open: Green color missing (see RGB Color diagnostic). If short to ground: Green color missing (see RGB Color diagnostic).
3	GRY*	SH SIG 1 (Shield signal)	Shield for terminals No. 1, 2, 17, 18, 19	0 V	If open: No change to display. If short to ground: No change to display.
4	ORN	AC-SI (Air conditioner serial in)	Communication signal for climate control unit	——	HVAC will not respond to navigation commands.
5	GRY	ILL+ (Illumination positive)	Parking light on signal	Lights on: battery voltage, Lights off: 0 V	If open: When brightness = Auto, night mode for the display is inoperative when lights on. If short to ground: Blows No. 4 (15 A) fuse in under-hood fuse/relay box.
8	WHT	CAN-H (CAN high)	F-CAN bus communication	Pulses 2.5—6 V average 2.5 V (depends on F-CAN communication traffic)	If open: 1) System Links FI-ECU, and Meter both show NG. 2) F-CAN diagnostic = NG. 3) B-CAN diagnostic = NG. 4) Car status CHG (CAN) = 0. 5) Functional Setup, Trip info, FUP & Sampled FL = 0. If short to ground: Same diagnostic conditions as when open, and also sets the following DTCs. • B1168 Gauge Control Module loss of Comm. (Engine) • B1169 Gauge Control Module loss of Comm. (A/T) • B1178 F-CAN communication Circuit error. • U0073 (F-CAN bus off) • U0155 (F-CAN Gauge control module) • U0121 (F-CAN VSA control)
9	GRY*	SH ECU BUS (Shield display bus)	Shield for display bus No. 10, 26 terminal	0 V	If open: No change to display. If short to ground: No change to display.
10	GRN	ECU BUS+ (Display bus positive)	Data bus+ GA-NET	0—5 V pulses average 2.5 V (depends on bus traffic)	If open: Navigation buttons do not work. If short to ground: Navigation buttons do not work.

*: The shielded wires have a heat-shrink tube insulating the outside of the wire.
The color of the insulating tube, typically black or dark gray, may not match the color of the wire shown on the circuit diagram.

Navigation Unit Connector B (32P)

Terminal Number	Wire Color	Terminal Name	Description	Voltage (about)	Symptom
17	YEL	B SIG 1 (Blue signal)	Blue color signal	0.2 V AC average in RGB color diagnostic mode	If open: Blue color missing (see RGB Color diagnostic). If short to ground: Blue color missing (see RGB Color diagnostic).
18	BRN	C SIG 1 (Composite signal)	Composite video (vertical/horizontal) Synchronizing signal	0.2 V AC average in RGB color diagnostic mode	If open: Picture rolls horizontally, colors still visible. If short to ground: Picture rolls horizontally, colors still visible.
19	BLU	GND SIG 1 (Ground signal)	Ground for color signal	0 V	If open: No change to display. If short to ground: No change to display.
20	PUR	AC-SO (Air conditioner serial out)	Communication signal for climate control unit	———	HVAC will not respond to navigation commands.
21	BRN	AC-CLK (Air conditioner clock)	Check signal for climate control unit	———	HVAC will not respond to navigation commands.
23	WHT	JOG (Interface dial Jog)	Interface dial operation signal	0—5 V pulses	If open: You cannot operate navigation system If short to ground: You cannot operate navigation system
24	RED	CAN-L (CAN low)	F-CAN bus communication	Pulses 2.5—6 V 2.5 V average (depends on bus traffic)	If open: 1) System Links PCM, and Gauge Control Module both show NG. 2) F-CAN diagnostic = NG. 3) B-CAN diagnostic = NG. 4) Car status CHG (CAN) = 0. 5) Functional Setup, Trip info, FUP & Sampled FL = 0. If short to ground: Same diagnostic conditions as when open, and also sets the following DTCs. • B1168 Gauge Control Module loss of Comm. (Engine) • B1169 Gauge Control Module loss of Comm. (A/T) • B1178 F-CAN communication Circuit error. • U0073 (F-CAN bus off) • U0155 (F-CAN Gauge control module) • U0121 (F-CAN VSA control)
25	GRY*	SH JOG (Interface dial Shield jog)	Shield for interface dial signal	———	———
26	RED	ECU BUS— (Display bus negative)	Data bus—	0—5 V pulses 2.5 V average (depends on bus traffic)	If open: Navigation buttons do not work. If short to ground: Hard buttons work OK.

*: The shielded wires have a heat-shrink tube insulating the outside of the wire.
The color of the insulating tube, typically black or dark gray, may not match the color of the wire shown on the circuit diagram.

(cont'd)

System Description (cont'd)

Navigation Unit Inputs and Outputs

NAVIGATION UNIT CONNECTOR C (16P)

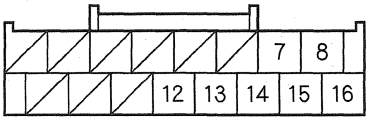

Wire side of female terminals

Navigation Unit Connector C (16P)

Terminal Number	Wire Color	Terminal Name	Description	Voltage (about)	Symptom
7	RED	RG-L+ (Route guidance voice left positive)	Left audio signal of voice guidance, and Voice Recognition (VR) prompts	Audio signal 0.004—0.04 V	If open: If voice activated, radio speakers buzz; if voice off, no effect. If short to ground: If voice activated, radio speakers buzz; if voice off, no effect.
8	GRN	MIC SIG+ (HFL mic signal positive)	Microphone output signal positive	4—5 V (navigation TALK button pressed)	If open: microphone signal shown as red in diagnostic screens: System Links and Functional Setup Mic Level. If short to ground: microphone signal shown as red in diagnostic screens: System Links and Functional Setup Mic Level.
12	PUR	STRG SW (Navigation remote switches)	Steering switch output	4—5 V (navigation TALK button pressed) 2.5—3 V (navigation BACK button pressed)	If open: Steering wheel navigation TALK and navigation BACK buttons do not work. If short to ground: Steering wheel navigation TALK, and navigation BACK buttons do not work.
13	GRY*	RG-L SH (Route guidance shield)	Shield for terminals No. 7, 14	0 V	If open: No effect on voice output. If short to ground: No effect on voice output.
14	GRN	RG-L GND (Route guidance ground)	Ground for voice guidance, and Voice Recognition (VR) prompts	0 V	If open: No effect on voice output. If short to ground: No effect on voice output.
15	GRY*	SH MIC (HFL mic signal shield)	Shield for terminals No. 8, 16	0 V	If open: No effect on voice control. If short to ground: No effect on voice control.
16	RED	MIC SIG− (HFL mic signal negative)	Ground for microphone signal	0 V	If open: microphone signal shown as red in diagnostics: System Links and Functional Setup Mic Level. If short to ground: No effect on voice recognition.

*: The shielded wires have a heat-shrink tube insulating the outside of the wire.
The color of the insulating tube, typically black or dark gray, may not match the color of the wire shown on the circuit diagram.

Navigation Unit Inputs and Outputs

NAVIGATION UNIT CONNECTOR D (5P)

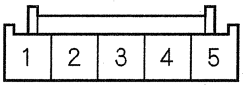

Wire side of female terminals

Navigation Unit Connector D (5P) (with AcuraLink)

Terminal Number	Wire Color	Terminal Name	Description	Voltage (about)	Symptom
1	WHT	HIP/HFL COMM3 (HFL communication 3)	Communication signal for HFL	5 V DC	Solid red HFL icon in Navi System Link. Phone icon in Route To screen is grayed out.
2	RED	HIP/HFL COMM4 (HFL communication 4)	Communication signal for HFL	4.5 V DC	Solid red HFL icon in Navi System Link. Phone icon in Route To screen is grayed out.
3	GRN	HIP/HFL COMM1 (HFL communication 1)	Communication signal for HFL	5 V DC	HFL icon in Navi System Link changes between red and green. Phone icon in Route To screen is grayed out.
4	BLK	HIP/HFL COMM2 (HFL communication 2)	Communication signal for HFL	4.5 V DC	HFL icon in Navi System Link changes between red and green. Phone icon in Route To screen is grayed out.
5	GRY*	HIP/HFL COMM SH (shield HFL)	Shield for terminals No.1, 2, 3, 4	0 V	——

*: The shielded wires have a heat-shrink tube insulating the outside of the wire.
The color of the insulating tube, typically black or dark gray, may not match the color of the wire shown on the circuit diagram.

Navigation Unit Connector D (5P) (without AcuraLink)

Terminal Number	Wire Color	Terminal Name	Description	Voltage (about)	Symptom
1	GRN	HFL COMM3 (HFL communication 3)	Communication signal for HFL	——	Solid red HFL icon in Navi System Link.
2	BLK	HFL COMM4 (HFL communication 4)	Communication signal for HFL	——	Solid red HFL icon in Navi System Link.
3	RED	HFL COMM1 (HFL communication 1)	Communication signal for HFL	——	HFL icon in Navi System Link changes between red and green.
4	WHT	HFL COMM2 (HFL communication 2)	Communication signal for HFL	——	HFL icon in Navi System Link changes between red and green.
5	GRY*	HFL COMM SH (HFL communication shield)	Shield for terminals No.1, 2, 3, 4	——	——

*: The shielded wires have a heat-shrink tube insulating the outside of the wire.
The color of the insulating tube, typically black or dark gray, may not match the color of the wire shown on the circuit diagram.

(cont'd)

System Description (cont'd)

Navigation Unit Inputs and Outputs

NAVIGATION UNIT CONNECTOR E (7P)

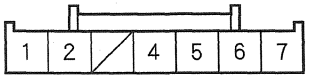

Wire side of female terminals

Terminal Number	Wire Color	Terminal Name	Description	Voltage (about)	Symptom
1	WHT	RC VCC	Power source for rearview camera	8 V	If open: No rearview camera image in reverse. If short to ground: No rearview camera image in reverse.
2	BLK	RC GND	Ground for rearview camera	0 V	If open: No rearview camera image in reverse.
4	RED	CAMERA GND	Ground for rearview camera video signal	0 V	If open: No rearview camera image in reverse.
5	YEL	CAMERA V	Video signal for rearview camera	0.3 V AC	If open: No rearview camera image in reverse. If short to ground: When put into reverse, navigation screen goes black (display backlight still operative).
6	GRY*	CAMERA SH	Shield for terminals No. 1, 2, 4, 5, 7	——	If open: No rearview camera image in reverse. If short to ground: No rearview camera image in reverse.
7	GRN	CAMERA (ADPT)	Control signal for rearview camera	0—1 V	If open: No rearview camera image in reverse. If short to ground: No rearview camera image in reverse.

* The shielded wires have a heat-shrink tube insulating the outside of the wire. The color of the insulating tube, typically black or dark gray, may not match the color of the wire shown on the circuit diagram.

Navigation Unit Inputs and Outputs

NAVIGATION UNIT CONNECTOR F (2P)

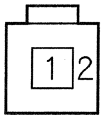

Wire side of female terminals

Navigation Unit Connector F (2P)

Terminal Number	Wire Color	Terminal Name	Description	Voltage (about)	Symptom
1	———	SIG (GPS)	GPS signal	5 V	If open: GPS icon on screen is white, system links screen ANT shows NG. If short to body ground: Same as open.
2	———	SH (GPS)	Ground for GPS signal	0 V	If open: GPS icon on screen is white, system links screen ANT shows NG. If short to body ground: No effect on system.

(cont'd)

System Description (cont'd)

Navigation Display Unit Inputs and Outputs

NAVIGATION DISPLAY UNIT 20P CONNECTOR

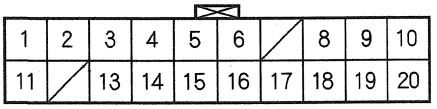

Wire side of female terminals

Navigation Display Unit 20P Connector

Terminal Number	Wire Color	Terminal Name	Description	Voltage (about)	Symptom
1	WHT	+B (+B power source)	Continuous power source	Battery voltage	If open: Screen completely off (no backlight visible). If short to ground: Blows fuse No. 7 (10 A) in the driver's under-dash fuse/relay box.
2	PUR	ACC (Accessory)	Power source for accessory	Battery voltage at ACC (I)	If open: Display and buttons do not work. If short to ground: Blows fuse No. 32 (10 A) in the driver's under-dash fuse/relay box.
3	GRN	GA-NET BUS+ (GA-NET bus positive)	Data bus+ GA-Net	0—5 V pulses average 2.5 V depends on bus traffic	If open: Navigation buttons and touch screen do not work. If short to ground: Navigation buttons do not work.
4	GRY*	GA-NET BUS SH (GA-NET)	Shield for terminals No. 3, 13	0 V	If open: No change to display. If short to ground: No change to display.
5	GRN	ECU BUS+ (Display bus positive)	Data bus+ GA-Net	0—5 V pulses average 2.5 V depends on bus traffic	If open: Navigation buttons do not work. If short to ground: Navigation buttons do not work.
6	LT GRN	SECURITY+	Security signal to rear screen	0 V	If open: The security system will set, and will not trip when screen is removed. If short to ground: The security system will set, and will not trip when screen is removed.
8	WHT	R SIG 1 (Red signal)	Red color signal	0.7 V AC	If open: Red color missing (see RGB Color diagnostic). If short to ground: Red color missing (see RGB Color diagnostic).
9	RED	G SIG 1 (Green signal)	Green color signal	0.7 V AC	If open: Green color missing (see RGB Color diagnostic). If short to ground: Green color missing (see RGB Color diagnostic).
10	BLK	GND (Ground) (G501)	Ground for display unit	0 V	If open: No change to display. If short to ground: No change to display.

*: The shielded wires have a heat-shrink tube insulating the outside of the wire.
The color of the insulating tube, typically black or dark gray, may not match the color of the wire shown on the circuit diagram.

Navigation Display Unit 20P Connector

Terminal Number	Wire Color	Terminal Name	Description	Voltage (about)	Symptom
11	LT BLU	ILL+ (Illumination positive)	Parking light on signal from dash and console lights	Battery voltage if lights on: otherwise 0 V	If open: When brightness=Auto, night mode for the display is inoperative when lights on. If short to ground: Blows fuse No. 7 (7.5 A) in the passenger's under-dash fuse/relay box.
13	RED	GA-NET BUS— (GA-NET bus negative)	Data bus— GA-Net	0—5 V pulses average 2.5 V depends on bus traffic	If open: Navigation buttons do not work. If short to ground: Hard buttons work OK.
14	GRY*	SH ECU BUS (Shield ECU bus)	Shield for display bus terminals No. 5, 15	0 V	If open: No change to display. If short to ground: No change to display.
15	RED	ECU BUS— (Display bus negative)	Data bus— GA-Net	0—5 V pulses average 2.5 V depends on bus traffic	If open: Navigation buttons and touch screen do not work. If short to ground: Hard and touch buttons work OK.
16	BRN	SECURITY—	Security signal from CD changer	0 V	If open: The security system sets, but does not trip when screen is removed. If short to ground: The security system sets, but does not trip when screen is removed.
17	BLU	GND SIG 1 (Ground signal)	Ground for color signal	0 V	If open: No change to display. If short to ground: No change to display.
18	YEL	B SIG 1 (Blue signal)	Blue color signal	0—1 V AC	If open: Blue color missing (see RGB Color diagnostic). If short to ground: Blue color missing (see RGB Color diagnostic).
19	BRN	C SIG 1 (Composite signal)	Composite video (vertical/horizontal) synchronizing signal	0.3 V AC	If open: Picture rolls horizontally, colors still visible. If short to ground: Picture rolls horizontally, colors still visible.
20	GRY*	SH SIG 1 (Shield signal)	Shield for terminals No. 8, 9, 17, 18, 19	0 V	If open: No change to display. If short to ground: No change to display.

*: The shielded wires have a heat-shrink tube insulating the outside of the wire.
The color of the insulating tube, typically black or dark gray, may not match the color of the wire shown on the circuit diagram.

(cont'd)

System Description (cont'd)

Interface Dial Inputs and Outputs

INTERFACE DIAL 5P CONNECTOR

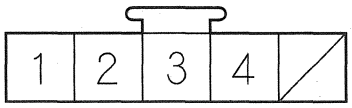

Wire side of female terminals

Interface Dial 5P Connector

Terminal Number	Wire Color	Terminal Name	Description	Voltage (about)	Symptom
1	WHT	JOG (jog)	Interface dial operation signal	0—5 V pulses	If open: You can not operate navigation system. If short to ground: You can not operate navigation system.
2	GRY*	SH JOG (Shield jog)	Shield for interface dial signal	——	——
3	BLK	GND (Ground) (G506)	Ground for interface dial	0 V	If open: You can not operate navigation system. If short to ground: No effect on navigation system operate.
4	PUR	ACC (Accessory)	Power source for interface dial	Battery voltage at ACC (I)	If open: You can not operate navigation system. If short to ground: Blows fuse No. 32 (10 A) in the driver's under-dash fuse/relay box.

*: The shielded wires have a heat-shrink tube insulating the outside of the wire.
The color of the insulating tube, typically black or dark gray, may not match the color of the wire shown on the circuit diagram.

Rearview Camera Inputs and Outputs

REARVIEU CAMERA 6P CONNECTOR

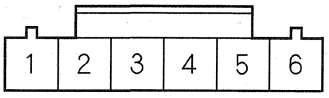

Wire side of female terminals

Rearview Camera 6P Connector

Terminal Number	Wire Color	Terminal Name	Description	Voltage (about)	Symptom
1	WHT	CAMERA VCC (VCC supply)	Power source for rearview camera	8 V	If open: No rearview camera image. If short to ground: When put into reverse, the navigation screen goes black (display backlight still operative).
2	BLK	RC GND (Ground camera)	Ground for camera signal	0 V	If open: No change to rearview camera image. If short to ground: No change to rearview camera image.
3	RED	CAMERA GND (Ground)	Ground for rearview camera	0 V	If open: No change to rearview camera image. If short to ground: No change to rearview camera image.
4	YEL	VIDEO (Video camera)	Video signal for rearview camera	0.3 V	If open: No change to rearview camera image. If short to ground: No change to rearview camera image.
5	GRY*	CAMERA SH (Shield camera)	Shield for terminals No. 1, 2, 3, 4, 6	0 V	If open: No change to rearview camera image. If short to ground: No change to rearview camera image.
6	GRN	CAMERA ADPT (Adaptive camera)	Control signal for rearview camera	0 V	If open: No change to rearview camera image. If short to ground: No change to rearview camera image.

*: The shielded wires have a heat-shrink tube insulating the outside of the wire. The color of the insulating tube, typically black or dark gray, may not match the color of the wire shown on the circuit diagram.

Circuit Diagram

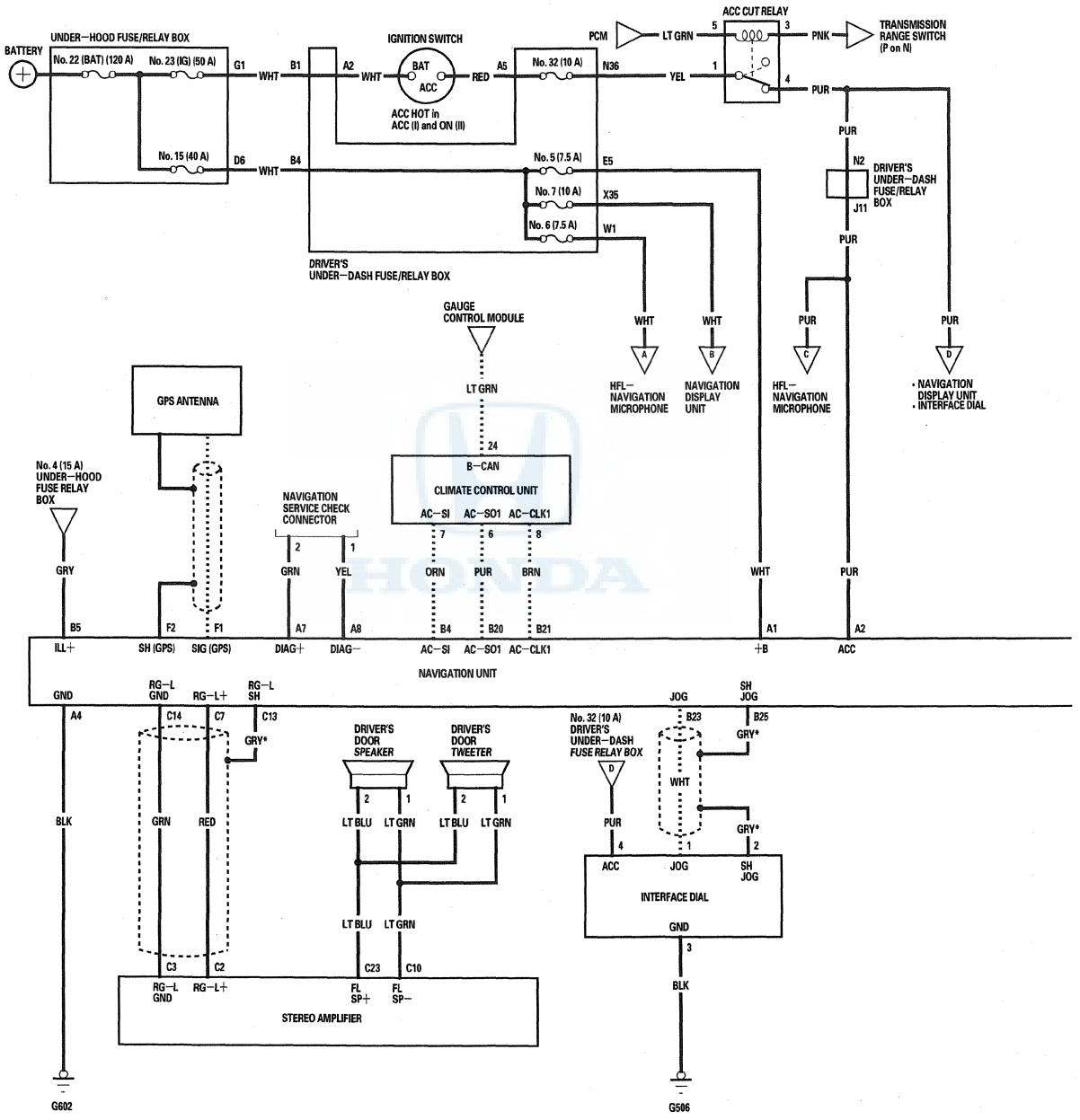

*: The shielded wires have a heat-shrink tube insulating the outside of the wire. The color of the insulating tube, typically black or dark gray, may not match the color of the wire shown on the circuit diagram.
: Other communication line
: Shielding

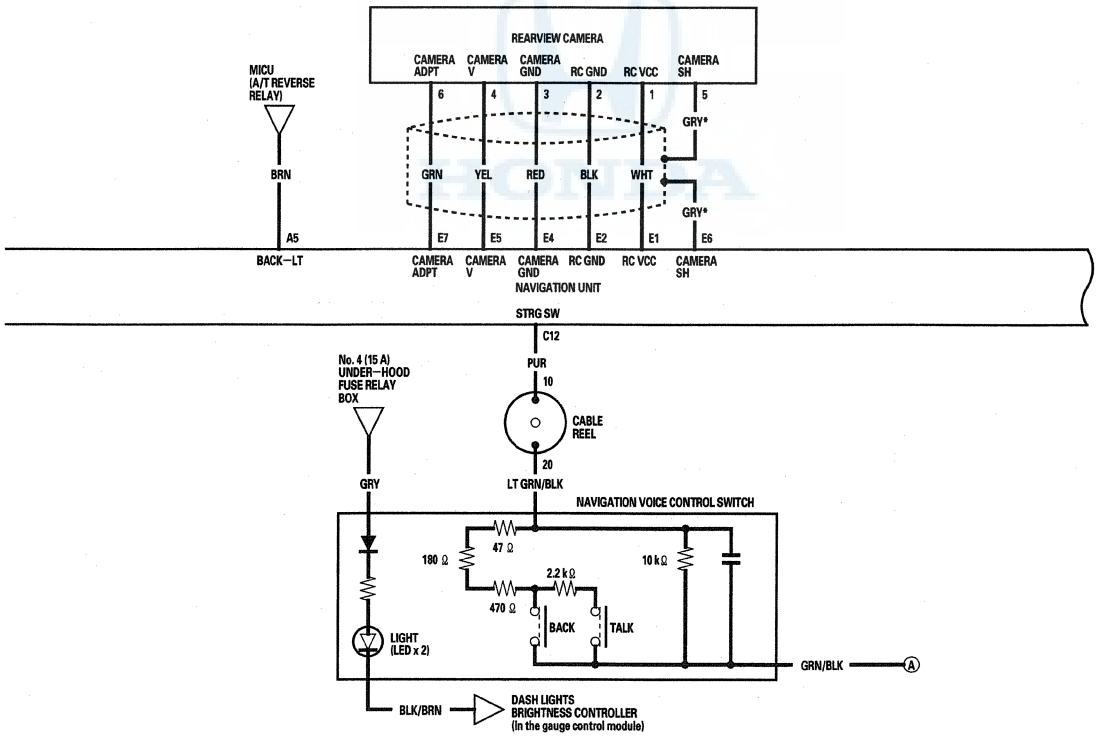

(cont'd)

Circuit Diagram (cont'd)

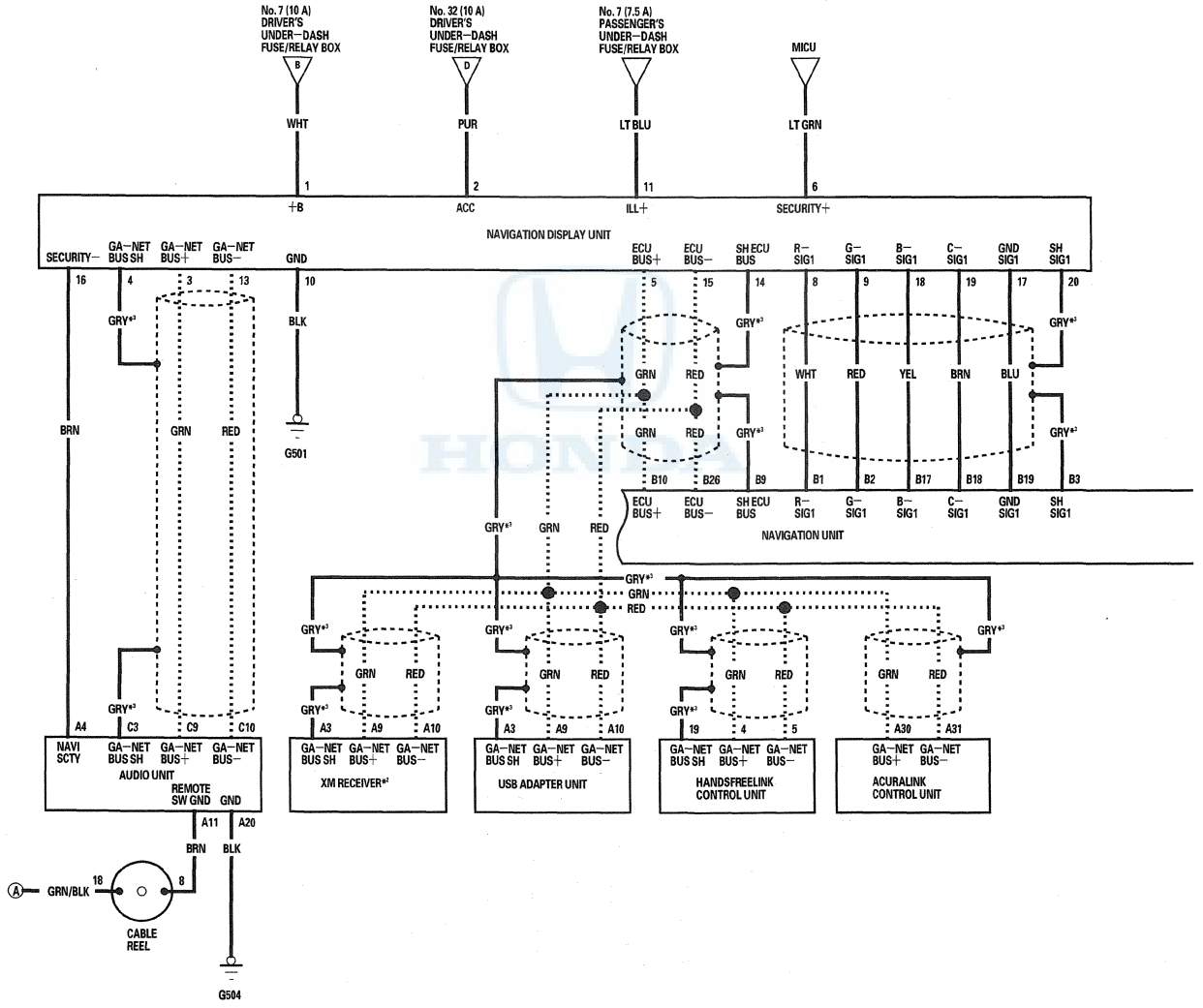

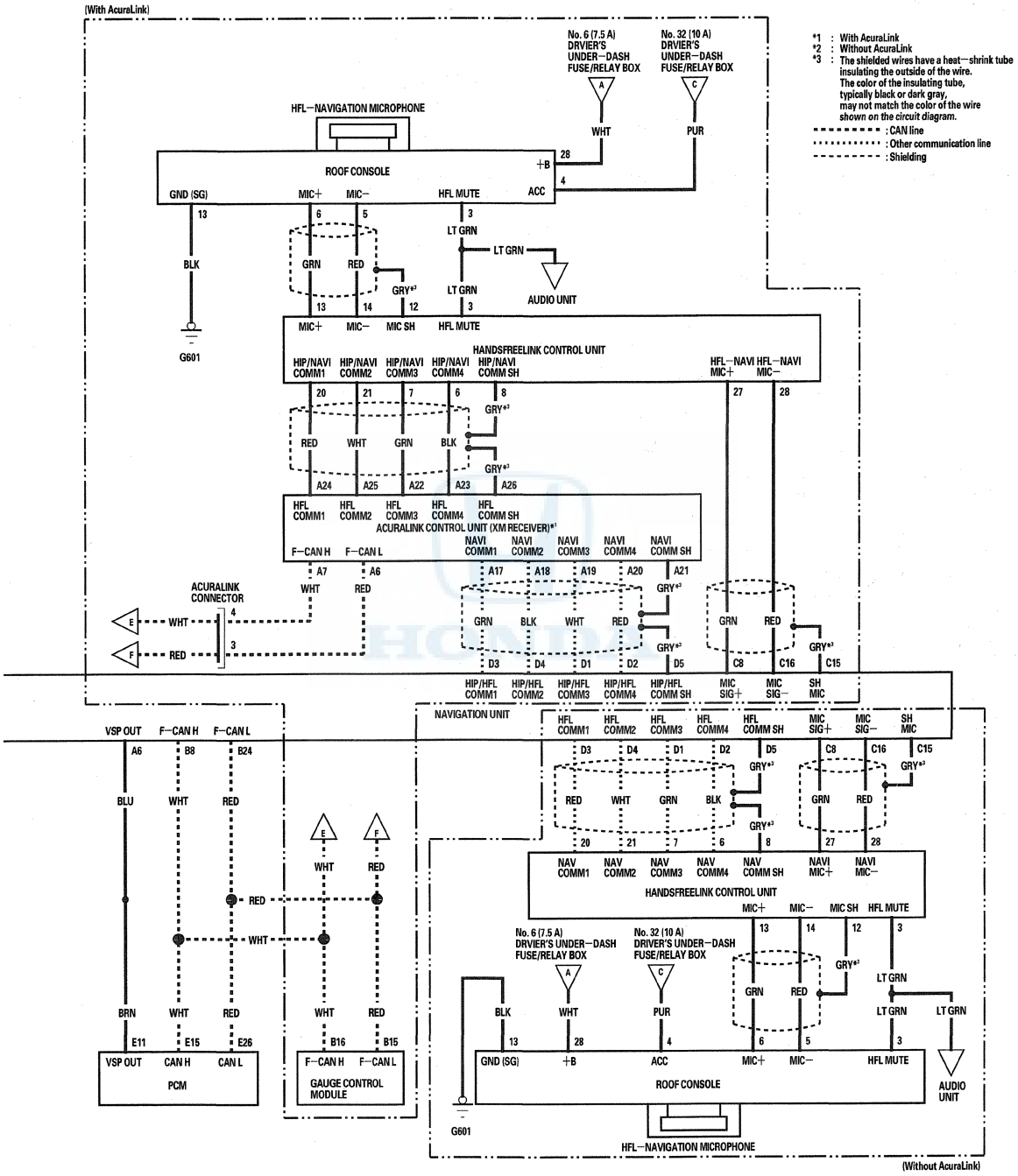
(With AcuraLink)
No. 6 (7.5 A) DRVIER'S UNDER-DASH FUSE/RELAY BOX
No. 32 (10 A) DRVIER'S UNDER-DASH FUSE/RELAY BOX
*1 : With AcuraLink
*2 : Without AcuraLink
*3 : The shielded wires have a heat-shrink tube insulating the outside of the wire. The color of the insulating tube, typically black or dark gray, may not match the color of the wire shown on the circuit diagram.
: CAN line
: Other communication line
: Shielding
HFL-NAVIGATION MICROPHONE
ROOF CONSOLE
GND (SG)
MIC+
MIC-
HFL MUTE
+B
ACC
WHT
PUR
BLK
GRN
RED
GRY*3
LT GRN
AUDIO UNIT
G601
HANDSFREELINK CONTROL UNIT
HIP/NAVI COMM1
HIP/NAVI COMM2
HIP/NAVI COMM3
HIP/NAVI COMM4
HIP/NAVI COMM SH
HFL-NAVI MIC+
HFL-NAVI MIC-
ACURALINK CONTROL UNIT (XM RECEIVER)*1
HFL COMM1
HFL COMM2
HFL COMM3
HFL COMM4
HFL COMM SH
F-CAN H
F-CAN L
NAVI COMM1
NAVI COMM2
NAVI COMM3
NAVI COMM4
NAVI COMM SH
ACURALINK CONNECTOR
NAVIGATION UNIT
MIC SIG+
MIC SIG-
SH MIC
VSP OUT
BRN
PCM
CAN H
CAN L
GAUGE CONTROL MODULE
NAV COMM1
NAV COMM2
NAV COMM3
NAV COMM4
NAV COMM SH
NAVI MIC+
NAVI MIC-
(Without AcuraLink)

System Diagnostic Mode

Start-up procedure and Diagnostic Menu

Compass type

There are two ways to enter the diagnostic mode:

Mode 1:
Connect the SCS connector (see page 23-254) to the navigation service connector located in the trunk. Turn the ignition switch to the ON (II) position. The display goes directly to the diagnostic menu screen shown below.

NOTE: When finished troubleshooting, make sure to remove the SCS connector.

Mode 2:
Turn the ignition switch ON (II). Use the navigation display hard buttons as described below:

Press and hold the MENU, MAP/GUIDE, and CANCEL buttons for about 5 seconds. The display screen goes directly to the Select Diagnosis Items menu shown below.

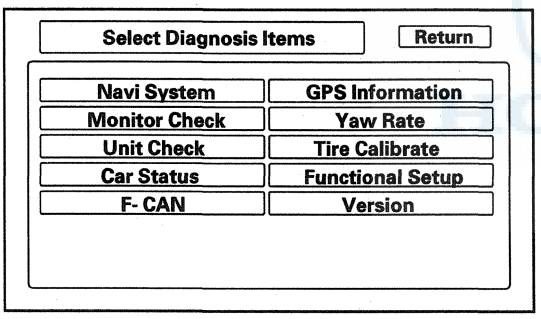

After the display changes to the Select Diagnosis Items menu, select the item you want to check and the diagnostic will start. To return to the previous screen, select RETURN.

- Navi System (Link)
- Monitor Check
- Unit Check
- Car Status
- F-CAN (System link)
- GPS Information
- Yaw Rate
- Tire Calibrate
- Functional Setup
- Version

Navi System Link

Compass type

- This diagnostic tests the cables connecting the navigation components. Ensure that the ignition switch is in the ON (II) position. When the diagnostic begins you hear a bong sound. The system is in a Detecting mode, and is waiting for all items in white to be tested. This includes the navigation voice control (navigation TALK/BACK) buttons, and microphone. Press the navigation TALK button on the steering wheel, and in a normal voice, say "testing." The Talk indicator on the screen should turn green, and the voice level indicator should move to at least the 6th bar to pass. Next, press the navigation BACK button. The Cancel indicator should turn green.
- If all of the communication lines connecting the system components, and the navigation TALK/BACK buttons/microphone check out OK (all block diagram items green), then the OK indicator turns green.
- If there is a problem with the system, the faulty system component item turns to red, and the screen shows NG in red. Use the troubleshooting index, and other diagnostic screens to help locate the problem.
- The indication on the screen may not change until you cycle the ignition switch. After repairing the affected cable or system, repeat this diagnostic.

NOTE:
- Green boxes and a green OK indicate that the communications lines (cables) are intact. This diagnostic does not necessarily imply that the individual components are functioning properly. For instance, the GPS antenna wire may be crushed, but still show as green. A road test, or other diagnostic may be necessary to find the problem.

- Select Return to return to the Diagnosis Menu.

USA models

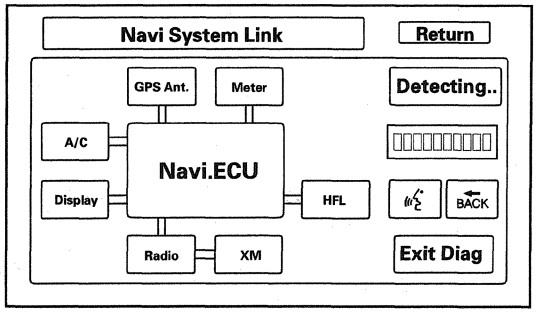

Alaska models

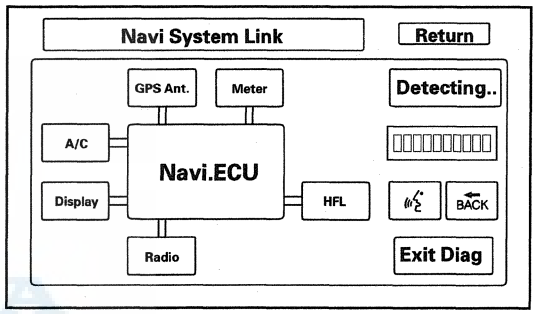

NOTE:
- The mic level indicator must reach the 6th bar or greater to pass the test.
- If the XM link is red or flashing red, go to audio system symptom troubleshooting, or see XM (HIP) diagnostic screen.

(cont'd)

System Diagnostic Mode (cont'd)

Start-up procedure and Diagnostic Menu

Map type

NOTE: Check the vehicle battery condition first (see page 22-90).

There are two ways to enter the diagnostic mode:

Mode 1:
Start the vehicle. When the globe screen appears, connect the SCS service connector (see page 23-254) to the navigation service connector located behind the navigation unit in the trunk. The screen changes to the System Links screen and automatically begins running the self diagnostic. See the System Links section for more information.

NOTE: When finished troubleshooting, make sure to remove the SCS service connector.

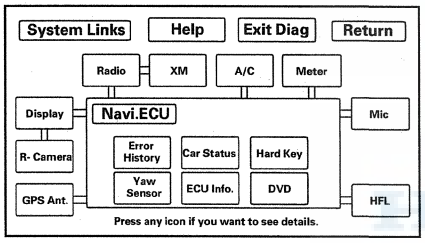

Mode 2:
Start the vehicle, and at the disclaimer screen use the navigation display hard buttons as described below:

Press and hold the MAP/GUIDE, MENU, and CANCEL buttons for about 3 seconds. The display screen goes directly to the Select Diagnosis Items menu shown below.

- Self-Diagnosis Mode (runs the automatic diagnosis of the navigation system)
- Detail Information & Setting (allows you to manually diagnose the navigation system)

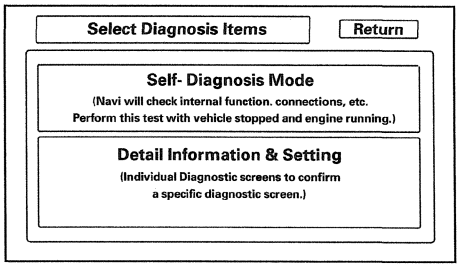

System Links

Map type

1. Enter this screen by connecting the SCS connector or by selecting Self Diagnosis Mode from the navigation screen main menu. The message at the bottom of the screen flashes indicating the diagnostic is running. Make sure you enter the audio anti-theft code.

   NOTE:
   - The system cannot complete a full diagnosis unless the engine is running.
   - DTC 1501 and/or 2703 can be stored when the ignition switch is at ACCESORY (I). With the ignition switch in ACCESORY (I), the A/C unit is turned off and the navigation unit loses communication and stores DTCs. Therefore, there is a possibility that the system is normal even though DTC 2703 is stored. Check system links with the engine running, and if it appears normal, the system is OK at this time.

USA models

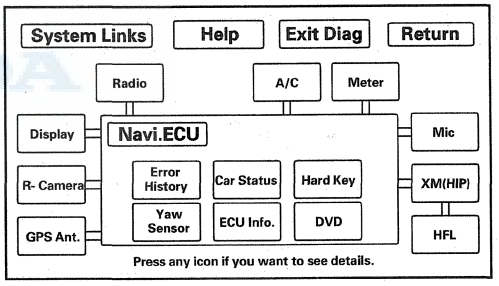

Hawaiian models

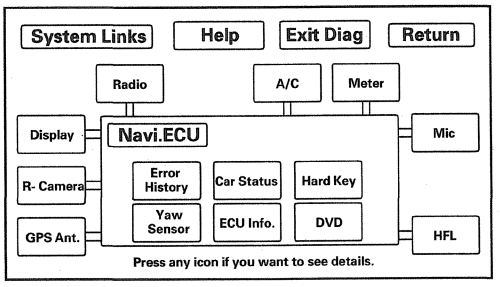

Canada models

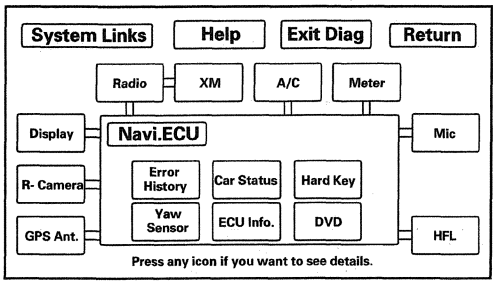

2. Rotate the interface dial to select the icon you want to diagnose. Push in the selector to see the details of that diagnostic function.

   The System Links function runs automatically and displays a flashing message at the bottom of the screen reminding you to have the engine running for the test. The diagnostic tests the following:

   - Most of the wires connecting the navigation components are shown in the block diagram.
   - The results from the various components shown in the block diagram.
   - The microphone is tested by listening to the bong sound produced by the navigation unit from the speakers when the diagnostic is started. This requires that the audio system be operating normally.

   When the diagnostic finishes, the icons turn different colors based on their test status. The color definitions are shown below and can also be seen by selecting Help on the System Links screen.

   The indication on the screen may not change until you exit and reenter the Self-Diagnosis mode. In some cases, you may have to restart the engine for the indication to change. After you repair the affected component or harness, repeat this diagnostic.

Each icon color is explained in the table below.

Icon Colors	Description
Green	The system ran a diagnosis and the results are OK.
Red	Errors that require replacement of hardware or harness. Examples are connection error or memory diagnosis errors. Troubleshoot for DTCs.
Yellow	Errors that doesn't require hardware replacement, such as an open display cover, an incorrect DVD leaving the vehicle in ACC (I), or because of a missing accessory, like the rear view camera.
White	The diagnosis is running. The screen functions are locked out while the diagnosis is runs.
Gray	The system cannot automatically check this function. You have to select the diagnosis item and manually do additional testing, like checking the navigation buttons in the Hard Key test. When you complete the Hard Key test and return to the System Links menu, the gray icon turns green.

NOTE: By selecting the HELP icon, you can see a description for each color.

(cont'd)

System Diagnostic Mode (cont'd)

Icon Color Information

Icon	Icon Color				
	GREEN	RED	YELLOW	WHITE	GRAY
Display	Result of "Connection" under the "Display" diagnosis menu is OK.	Result of "Connection" under the "Display" diagnosis menu is NG.	———	Executing (Not completed)	———
Radio	Result of "Connection" under the "Radio" diagnosis menu is OK.	Result of "Connection" under the "Radio" diagnosis menu is NG.	———	Executing (Not completed)	———
XM (HIP)*1	Result of AcuraLink control unit (XM receiver) and Navigation unit connection is OK.	Result of AcuraLink control unit (XM receiver) and Navigation unit connection is NG.	———	Executing (Not completed)	———
XM*2	Result of "Connection" under the "XM" diagnosis menu is OK.	Result of "Connection" under the "XM" diagnosis menu is NG.	———	Executing (Not completed)	———
GPS Ant.	All result of "Antenna" and "Receiver in NAVI ECU" is OK.	Any result of "Antenna" and "Receiver in NAVI ECU" is NG.	———	Executing (Not completed)	———
R-Camera	Result of "Connection" under the "R-Camera" diagnosis menu is OK.	Result of "Connection" under the "R-Camera" diagnosis menu is NG.	———	Executing (Not completed)	———
A/C*3	Result of "Connection" under the "Aircon" diagnosis menu is OK while "Ignition" is ON.	Result of "Connection" under the "Aircon" diagnosis menu is NG while "Ignition" is ON.	While "Ignition" is OFF.	Executing (Not completed)	———

* 1: With AcuraLink
* 2: Without AcuraLink
* 3: DTC 2703 can be stored when the ignition switch is at ACC (I). With the ignition switch in ACC (I), the climate control unit is turned off and the navigation unit loses communication and stores DTCs. It is possible that the system is normal with DTC 2703 stored. Check the system links with the engine running, and if it shows normal, the system is OK at this time.

Icon	Icon Color				
	GREEN	RED	YELLOW	WHITE	GRAY
Meter (F-CAN)	All result of F-CAN related units are OK.	Any result of F-CAN related units are NG.	———	Executing (Not completed)	———
HFL	Result of "Connection" under the "HFL" diagnosis menu is OK.	Result of "Connection" under the "HFL" diagnosis menu is NG.	———	Executing (Not completed)	———
Mic	The microphone detects the sound "Pi-Pi-Pon" at the system link menu.	The microphone could not detect the sound "Pi-Pi-Pon" at the system link menu.	———	Executing (Not completed)	———
ECU Info.	Both V-RAM or D-RAM is OK, and all "Program Flash", "Serial No.", "Model" is available, and the DVD lid is closed.	Either the V-RAM or D-RAM is NG, or any of the "Program Flash", "Serial No.", "Model" is unavailable.	DVD lid is opened	Executing (Not completed)	———
Hard Key	All buttons are pressed and are detected under "Hard key" menu.	All buttons are not pressed or pressed but not detected under "Hard key" menu, or exit from "Hard key" menu without the button not detected.	———	———	Until changing to "Hard key" menu.
Error History	———	———	"Hard Error" or "Soft Error" is detected under "Error History" menu.	Executing (Not completed)	"Hard Error" or "Soft Error" is not detected under "Error History" menu.

(cont'd)

System Diagnostic Mode (cont'd)

Icon	Icon Color				
	GREEN	RED	YELLOW	WHITE	GRAY
DVD	DVD mechanism is normal and the proper DVD is installed.	———	Improper DVD is installed, or DVD is not installed, or can not identify software version from the DVD or internal mechanism failure.	Executing (Not completed)	———
Yaw Sensor	Result of the "Yaw Sensor" diagnosis menu is OK.	Result of the "Yaw Sensor" diagnosis menu is NG.	Result of the "Zero Point Output" under the "Yaw Sensor" diagnosis menu is NO CHECK.	Executing (Not completed)	———
Car Status	———	———	———	———	Check these systems manually.

Factory diagnostic screen In Line Diag

NOTE: If the vehicle left the factory in the factory diagnostic mode, you will see this screen every time you turn on the ignition. You may also see this screen if you recently replaced the navigation unit.

When a navigation control unit is powered up for the first time at the factory or after replacement with a new or remanufactured navigation unit, the factory diagnosis screen (In Line Diag) appears. Normally the factory does the steps necessary to verify proper operation and terminate the factory diagnostic. Until the proper confirmation sequence is done, the screen appears every time the vehicle is started.

Map type (USA models)

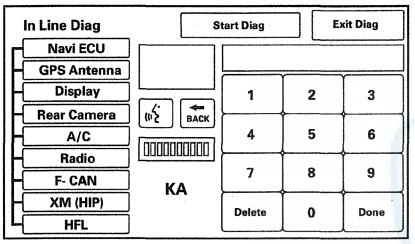

Map type (Hawaiian models)

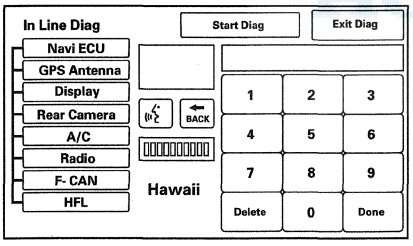

Map type (Canada models)

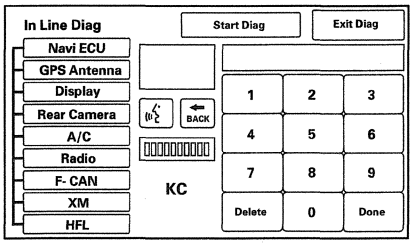

Compass type (USA models)

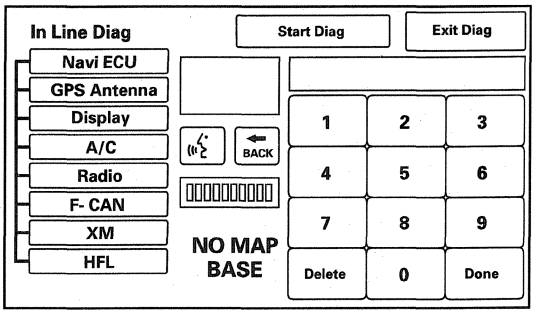

Compass type (Alaska models)

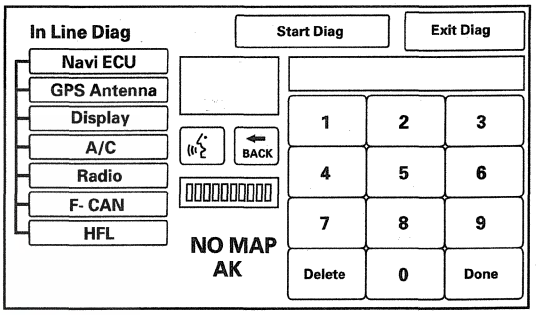

Follow the steps below to prevent the screen from appearing in the future:

- Press and hold the MENU, MAP/GUIDE, and CANCEL buttons for about 3 seconds. The Select Diagnosis.
- Press and hold the MAP/GUIDE button for about 5—10 seconds. A screen with a Complete button, appears.
- Press Complete, then Return, and then shut the key off for 5 seconds. Do not disconnect the battery during this period as the unit is saving the setting to the SRAM memory. The In Line Diag should not appear again.
- Restart the vehicle, and confirm normal operation by completing the TQI of the Navigation System Service Bulletin.

(cont'd)

System Diagnostic Mode (cont'd)

Monitor Check

Overview of display unit

- The display unit communicates with the navigation unit over its own GA-Net bus. Information sent by the navigation unit to the display unit includes commands to control the LCD back light.
- The security system protects the navigation display unit by daisy-chaining the security signal through it, and then passing the signal to the audio unit.
- The illumination input from the gauge brightness control provides back lighting for the buttons surrounding the screen.

These screens allow you to troubleshoot the display unit. Select the item you want to troubleshoot, and follow the diagnostic instructions.

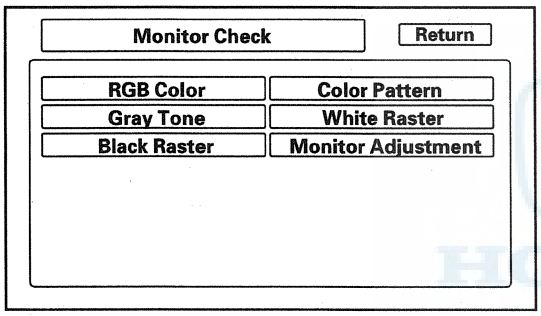

Detailed Information & Settings

These section allows you to run a specific diagnostic and allows additional setting choices for some screens that are not shown when selecting an icon from the System Links screen.

When you select the Item Detail Information & Setting menu, the main diagnosis menu appears.

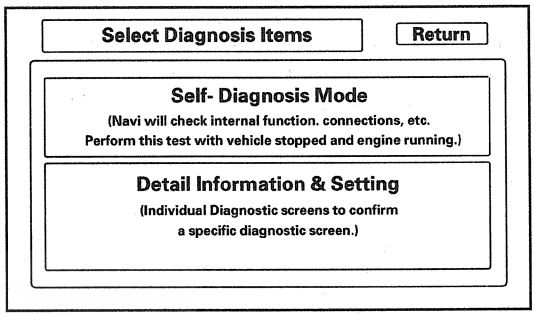

RGB Color

This screen verifies that the display unit is receiving the video (R, G, B and Composite sync) signals properly. The three primary colors should all appear without distortion. The combination of all three should produce a central white section. If any of the colors are missing, troubleshoot for the color signal (see page 23-225). If the picture has lines in it or scrolls horizontally, or vertically, troubleshoot for a Composite sync problem (see page 23-227).

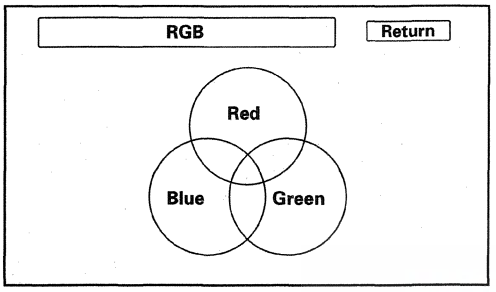

Gray Tone

This screen diagnoses problems with contrast. You should be able to see the changes from bar to bar across the scale. It is normal for the two bars on either side to appear the same. If you can't see changes from bar to bar, replace the navigation unit.

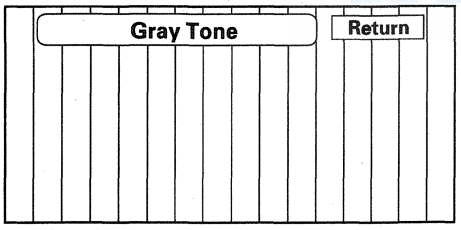

Black Raster

This diagnostic screen checks for pixels that may be stuck on. The entire display must be black. If pixels are stuck on, replace the navigation unit.

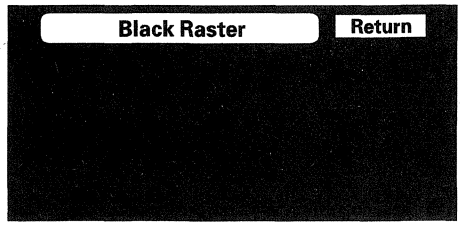

Color Pattern

The chart below shows the colors being used for the map and menu screens. This is for factory use only. To check the color signal, use the RGB Color diagnostic found under the Monitor Check.

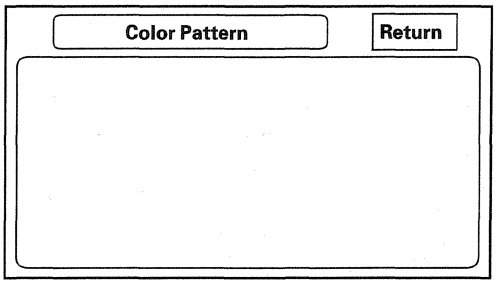

White Raster

This diagnostic screen checks for pixels that may be dead (off). The entire display must be white. If there are dead pixels, replace the navigation unit.

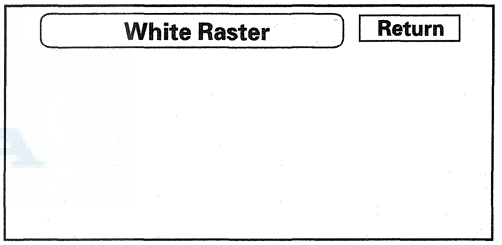

Monitor Adjustment

This allows you to center the navigation display. Use the joystick to move the picture up/down or left/right. It is unlikely that you will ever need to adjust the monitor position. The Default button will reset the display position to factory specifications.

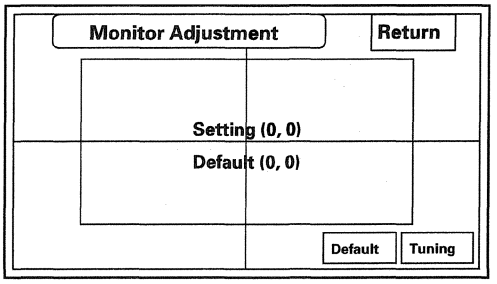

(cont'd)

System Diagnostic Mode (cont'd)

Unit Check (Quick Check)

Some of the tests and screens that are displayed under the Unit Check are different from the more detailed checks listed in other areas of this service manual.

To start the test, select the item you want to check.

- Display
- Radio
- GPS
- ECU Info.
- Rear Camera
- PC Card Info.
- Hard Key
- Yaw Sensor
- DVD
- Aircon
- HFL
- XM (Canada models)
- Smart Card

USA and Hawaiian models

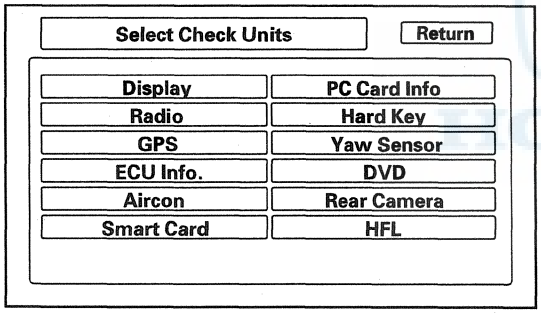

Canada models

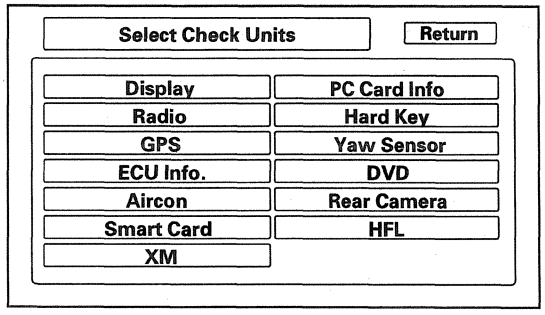

Display

This diagnostic does additional checks on the communication bus between the control unit and the display. This test also checks the internal electronic functions.

- When the connection is NG, first check for loose terminals at the navigation unit and the display unit connections. Next check for an open or short in the communication line between the navigation unit and the display unit. If you find the line has an open or short, replace the affected shielded harness.
- If the ROM or RAM is NG, replace the display unit.
- The version represents the software version in the display.

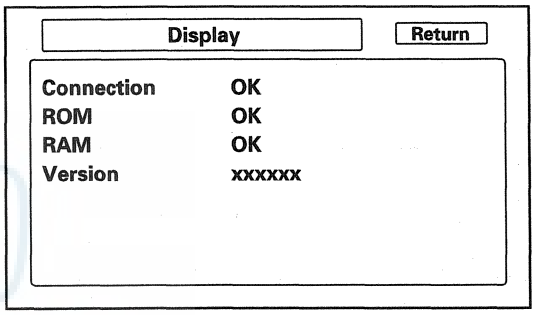

Radio
This test checks connection between the audio unit and the navigation system. If NG is indicated, check for loose audio unit connectors.

NOTE: If the XM link appears red, but the radio link appears green in the navigation system link, refer to audio system symptom troubleshooting.

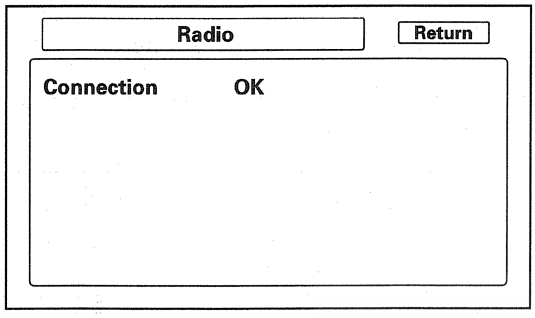

GPS
If GPS indicates NG (ANT), then check the entire GPS antenna wire from the navigation unit to the antenna only. If the wire is crushed or damaged, try a known-good antenna. If the diagnostic then reads OK, replace the original GPS antenna. If the diagnostic still reads NG (ANT), replace the navigation unit.
Select information to see the GPS satellite details.

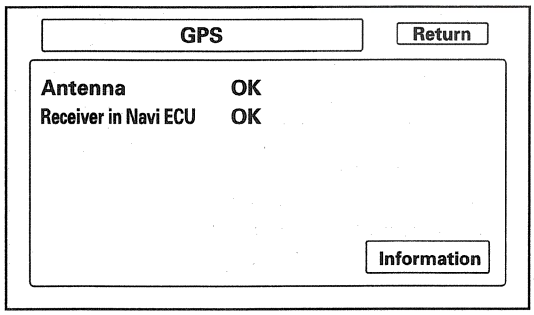

ECU Info.
This screen looks for problems in the navigation unit. When you initiate this diagnosis, the navigation unit may freeze or delay up to a minute while the diagnosis runs.

NOTE: Do not try to end this diagnostic by pressing OK or Mem clear before it finishes, otherwise the system may reboot.

- If V-RAM or D-RAM is NG, replace the navigation unit.
- DVD lid displays the state of DVD Lid of navigation unit.
- Program Flash: Displays the version of the navi software in memory.
- Program on DVD: If displayed, this value represents the version of the navi software on the navi DVD.
- DVD version represents the database version on the DVD. You can find this information in either the Setup Screen Version, or in the Diagnostic Screen Version.
- Serial No. should be the same as the serial number found on the underside of the navigation unit. You need this number to obtain the security code from the Interactive Network (iN) system.
- The Mem Clr is for factory use and should not be used unless instructed by the factory.
  Selecting this will clear the client's settings, personal information, GPS orbital data, and anything else stored in memory.

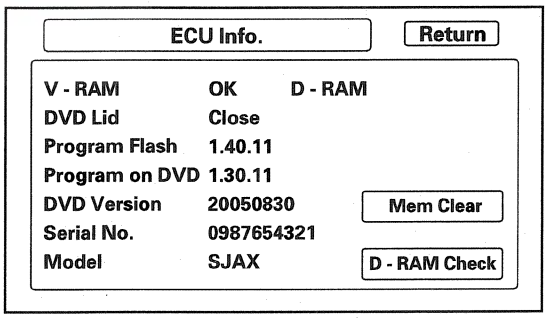

(cont'd)

System Diagnostic Mode (cont'd)

Rear Camera
- This tests whether rearview camera is connected to the navigation unit.
- When connection is shown NG, check the rearview camera signal line.

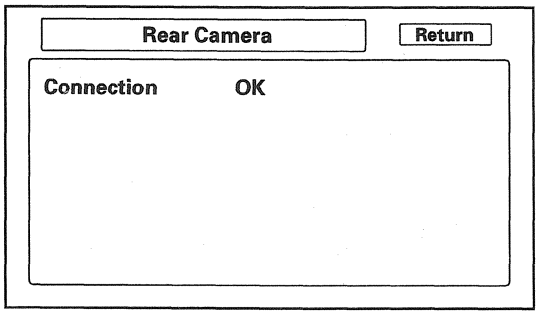

PC Card info.
There is no PC Card in the PC slot, and the screen should display, "PC Card is not inserted".

NOTE: Do not insert any card or object into the slot.

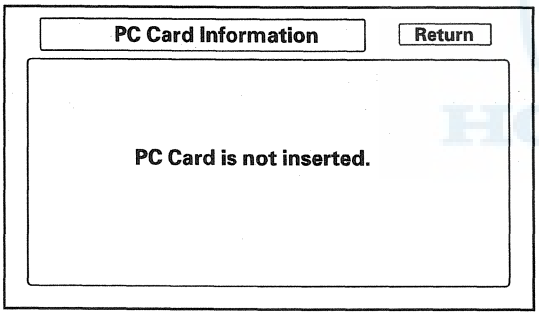

If the factory provides a PC card and instructs you to insert it, the screen displays the Manufacturer, and Product Name as shown in the following screen.

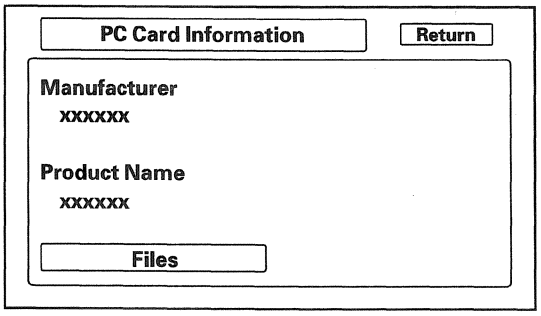

Hard Key
This diagnostic tests the interface dial and the buttons that surround it. For this model, the interface dial and buttons do not use the GA-Net bus for communications.

To complete the test, touch each button on the vehicle's control panel, and move the interface dial to each indicated position. As each function is tested, the corresponding button on the display should highlight.

To exit, push in and hold the selector knob.

NOTE: You cannot use the onscreen return button to exit this function

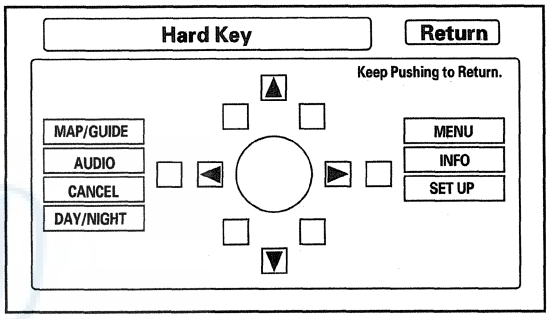

Yaw Sensor
This screen gives a quick test of the yaw sensor functionality based on the two voltages Sensor and Offset. For more information see the Yaw Rate Diagnostic.

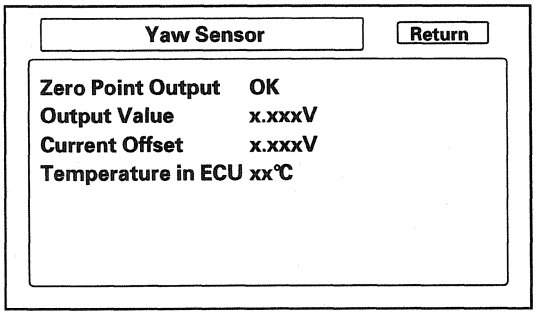

DVD
This diagnostic tests the navigation DVD reader.

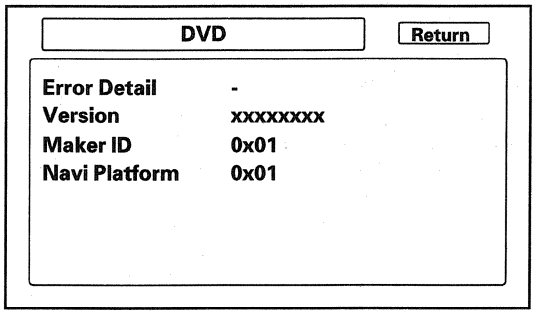

Aircon
This diagnostic tests the climate bus connection (AC-SI and AC-SO) between the navigation unit and climate control unit. This test does not check the system components, only the connections. Make sure the engine is running for this test.

NOTE: It this test is run with the ignition switch in ACC (I), the result will be NG.

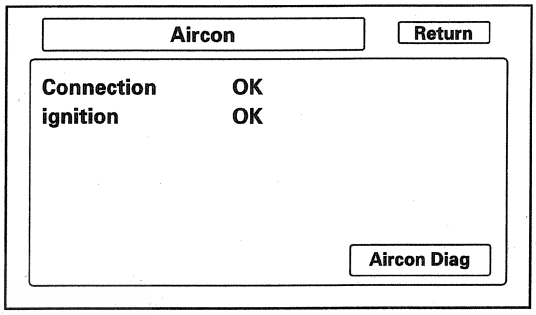

HFL
This checks the 4 wire communication bus between the HFL and the navigation unit. This test does not check the system components, only the connections.

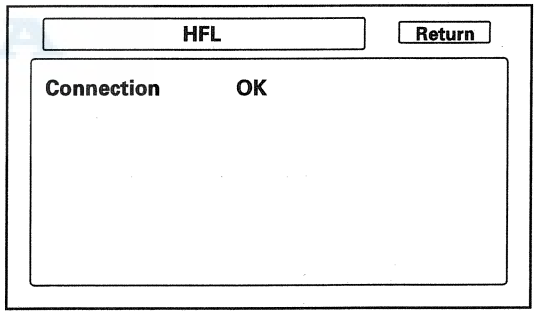

(cont'd)

System Diagnostic Mode (cont'd)

XM (Without AcuraLink)
- This checks the GA-NET Bus line to the XM receiver.
- When connection is shown with NG, check the connection between the XM receiver and the audio unit.

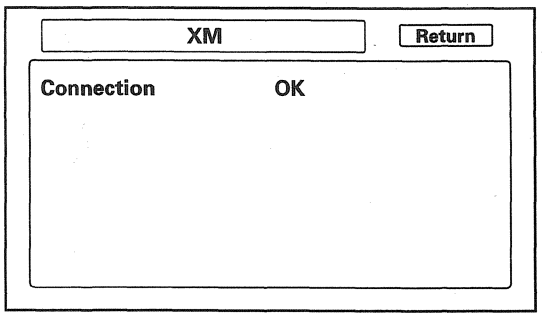

Smart Card
If the remotes are linked to the vehicle, you can check the remote card condition on the this screen.

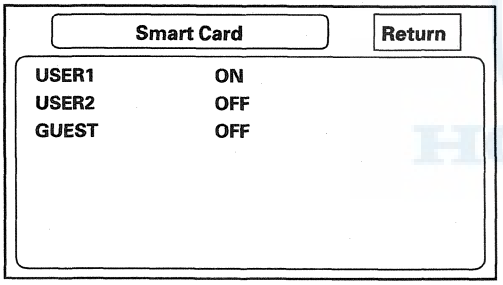

Functional Setup

Select the item you want to check.

- Save Users Memory
- Demo Mode (Map type)
- Mic Level
- Log Data (Compass type)
- GPS Send Time (Compass type)
- Solar Angle (Compass type)

Map type

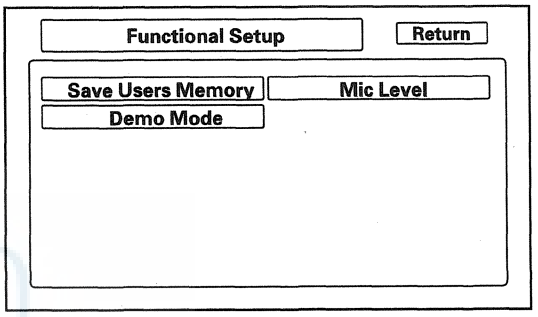

Compass type

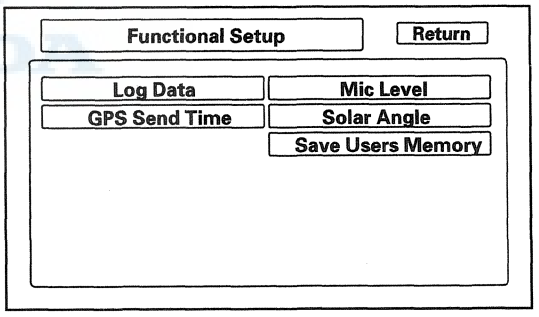

Solar Angle (Compass type)
This screen graphically displays the sun's position as determined by the GPS. The compass system uses the sun's angle, along with the sunlight sensor to control the driver/passenger A/C air flow. The heat that the A/C unit removes varies, depending on the angle of the sun entering the vehicle. This screen is for factory use only, and should not be adjusted.

- The screen shows a circular diagram of the sky oriented in the direction that the vehicle is pointing. During daylight hours a red dot is shown, representing the direction and elevation of the sun. The outer circle represents the horizon (0 degrees elevation). The middle circle is 30 degrees, the center circle is 60 degrees, and the very center is directly overhead (90 degrees).
- The manual tuning button should always be OFF.
- The Angle is the angle that the sun (shown with red dot) is above the horizon.
- The vehicle value represents the angle, clockwise from North, to the direction that the vehicle position (VP) icon is pointing (always points straight up).
- The direction value is the angle, measured clockwise from the VP (straight up) to the suns position.
- The reliability ranges from 1 to 3, and represents the accuracy of the Vehicle Position relative to the sun.

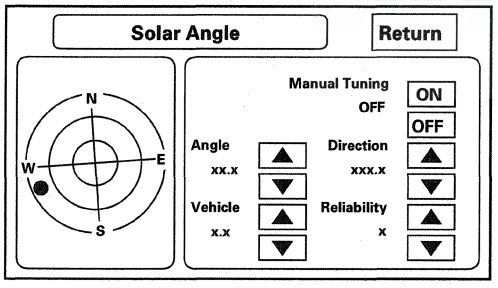

Log Data (Compass type)
This screen allows the factory to select log data to troubleshoot compass system issues.

- Normally there is no card in the PC Card Slot, and the PC slot door should always be closed. The screen should appear as shown.

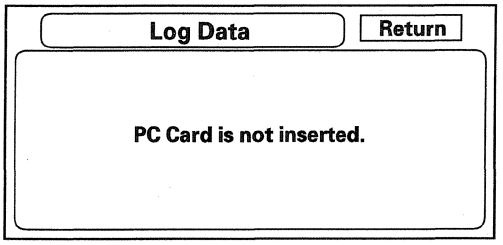

- However, if the factory provides a PC card and instructs you to insert it into the card slot (label side up). Follow the factory procedure for gathering test data, and properly ending the test.

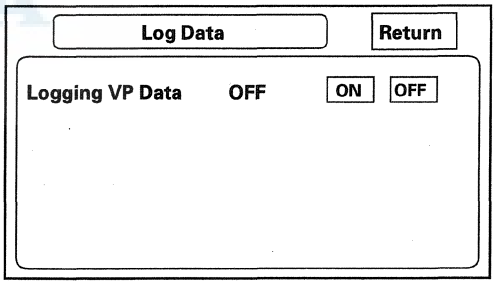

(cont'd)

System Diagnostic Mode (cont'd)

Save Users Memory

When replacing the navigation unit, this function allows the dealer to transfer the client's personal data to the new navigation unit.

This is similar to saving and entering the client's audio presets when replacing an audio unit. The transferred information includes their Setup settings and personal addresses. The dealer inserts a PC card (like the PC card in the HDS), and then selects the Save Users Memory function. The two functions in this diagnostic screen are Export and Import. Export saves the client's data to the PC card, and Import moves the PC card files to the new navigation core.

See the FAQs below for information regarding PC cards, and how to use this function.

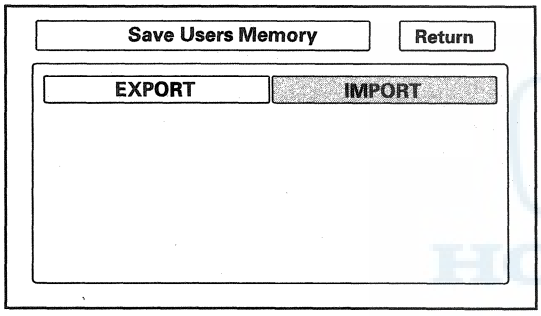

Export
Select this button to move the client's data from the original navigation unit to the PC card. Select YES on the Export User Data Confirmation screen. The process takes only a couple of seconds. The system stores two files on the card.

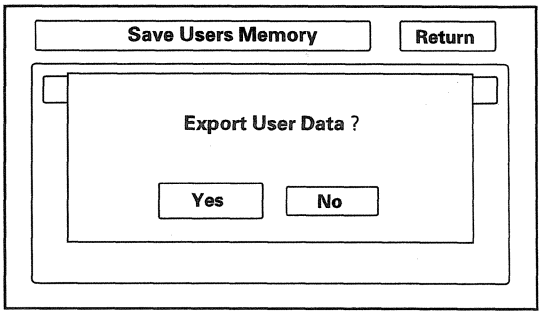

Import
After installing the client's original DVD in the new navigation unit, allow the system to boot up. Insert the PC card in the new navigation unit and enter the navigation diagnostic mode.

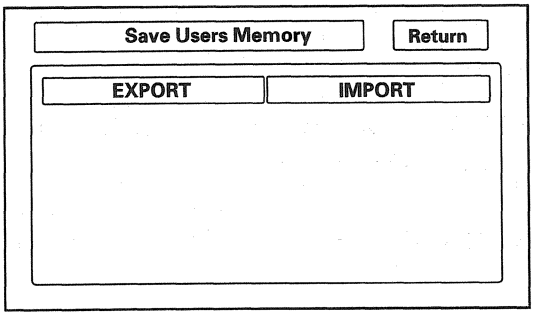

Select YES on the Import Confirmation screen.

Import moves the two files stored by the Export process from the PC card to the new navigation unit. When the transfer is finished (a few seconds) the system will automatically reboot. After the system reboots, remove the PC card from the PC slot.

If the Import button is grayed out, follow the troubleshooting in the FAQs below. The client's files can only be transferred to a new navigation control unit if the Model and the Program Flash shown on the Version screen are the same. These files cannot be transferred from an RL to a TSX, or from an RL with version 1.07.00 to another RL with version 1.32.00.

Demo Mode (Map type)

This screen is for factory use only, and should always be set to OFF. Occasionally the DEMO setting is turned ON when vehicles are being used at Auto Shows or similar events. Turning this feature on, allows the navigation system to automatically follow a route to a destination when the vehicle is stationary. The Speed changes the speed of the demo mode.

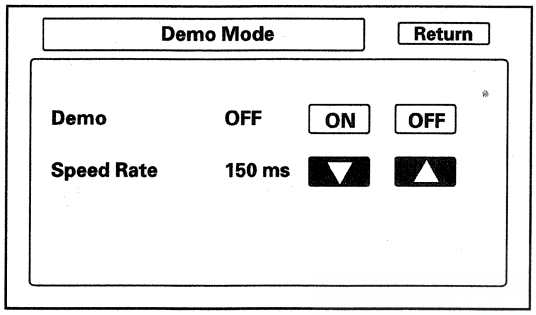

Mic Level

This diagnostic allows you to independently test the microphone and the navigation TALK and BACK buttons. They are used to activate the voice control system. The microphone is located near the map light in the roof console. The microphone can now isolate the driver's voice even when there is none or other conversations in the vehicle. To properly check the microphones, make sure you are sitting in the driver's seat.

- Press the navigation TALK button on the steering wheel, wait until you hear a beep and in a normal voice say testing. The TALK indicator on the screen should momentarily turn green, and the text Now Recording... should appear in yellow. If the talk indicator shown on the screen does not briefly turn green, then check the wiring from the steering wheel navigation TALK button to the navigation unit. If there is no Mic Level movement when you speak, then you should check the wires running from the microphone in the roof console to the HandsFreeLink control unit and the navigation unit. If the wires are OK, the microphone must be faulty; replace the microphone located in roof console (see page 23-339).
- Press the navigation BACK button on the steering wheel. This should cause the Cancel indicator on the screen to momentarily turn green. If it does not briefly turn green, check the wiring from the steering wheel navigation BACK button to the navigation unit.

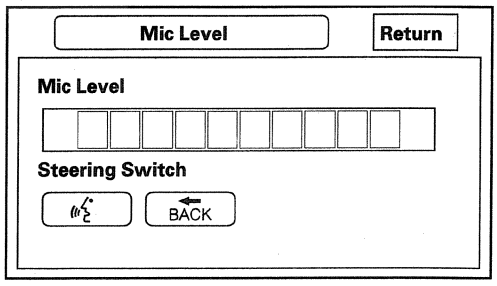

NOTE: The mic level should reach the 6th bar.

(cont'd)

System Diagnostic Mode (cont'd)

F-CAN System Link

F-CAN (Fast Controller Area Network) passes information between processors on the network. For example, the F-CAN network passes trip computer information between the gauge control module and the navigation unit for the trip computer function. The F-CAN network uses a communication protocol that transmits data at 500 Kbps.

- If the diagnostic screen below reads NG with the ignition switch ON (II), then diagnostic trouble codes (DTCs) for the F-CAN can be retrieved with the HDS (Honda Diagnostic System). The data displayed in the ID boxes is irrelevant.
- For more details on troubleshooting the F-CAN, refer to the multiplex system.

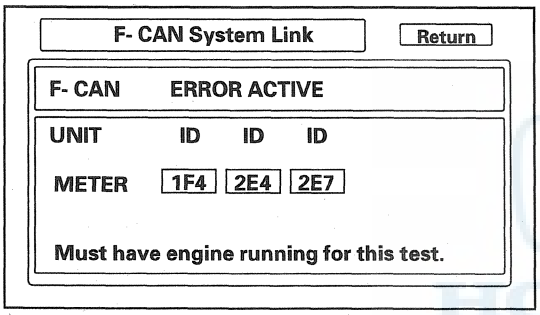

GPS Information

This screen shows the current status of GPS reception. The circular diagram shows the current location of the GPS satellites (yellow numbers) as they would appear in the sky. The outer circle represents the horizon (0 degrees elevation). The middle and inner circles represents 30 and 60 degrees respectively. The very center of the diagram (90 degrees elevation) is directly overhead. Nearby obstructions, like tall buildings will block satellites in that direction. That is why it is necessary to be in an open area to effectively troubleshoot GPS reception issues. The satellite numbers shown on the diagram correspond to the PRN number in the GPS Details screen. There are always at least 24 active GPS satellites in orbit. Because satellites fail, and have to be removed from service, spares are always parked in orbit, ready to be activated. This is why the PRN (satellite ID number) can be greater than 24.

NOTE: When you use this screen for troubleshooting, park the vehicle outside, away from buildings, tall trees, and high-tension wires for at least 10 minutes with the engine running.

- The Number of Satellites box shows the number of acquired satellites (maximum of 12). It should contain three or more icons. If not troubleshoot for GPS icon is white or not shown (see page 23-230).
- The Current Position shows latitude, longitude, and elevation (in feet). If there are less than four satellites, the elevation can be grossly inaccurate.
- The Date/Time field shows the current date, and also a time that includes daylight savings and other offsets entered by the customer in Setup screen 2 Adjust Time Zone/Clock.

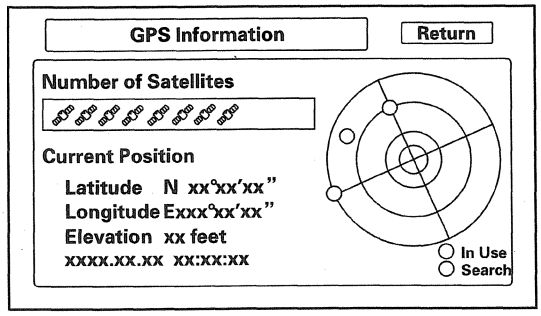

NOTE: Pressing the MAP/GUIDE button displays the satellite number on each circle.

GPS Detail

By pressing and holding the MENU button for 2 seconds, a GPS Detail screen appears. This screen displays real time incoming satellite positional data when the vehicle is outside in the open. The information shown on this screen is for factory use.

NOTE: The data shown is an example only.

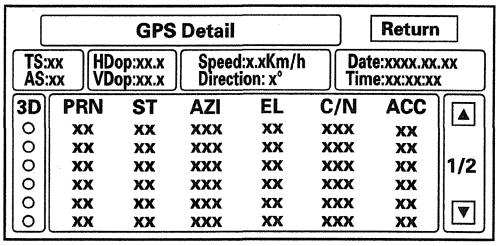

- The box TS/AS and H Dop/V Dop is for factory use.
- The Speed and Direction information is updated in real time when driving.
- The Date/Time Information is the same as in Setup screen 2 Adjust Time Zone/Clock.
- If the 3D icon is shown above the yellow dots, this implies that at least four satellites are available for map positioning, and the GPS indicator on the map screen will be green. See the Global Positioning System detailed explanation in the System Description.
- If the row of data in the table below begins with a yellow dot, the AZI and EL fields can be used to locate each satellite on the circular GPS diagram (see prior screen).

The table of values shown below define the terms at the top of the columns in the GPS Detail screen.

Column	Description	Problem indication
3D	Active satellites (Yellow Dot)	If 3D or 2D is missing when the vehicle is parked outside, follow GPS icon is white or not shown troubleshooting (see page 23-230).
PRN	The satellite ID number	
ST	The status: 0 = cannot view or searching, 2 = acquiring	If all 0, then, follow GPS icon is white or not shown troubleshooting (see page 23-230).
AZI	Azimuth, the angle (0—360) clockwise from north	
EL	Elevation from the horizon (90 deg is overhead)	
C/N	N/A	Normal signal is 49-52, no signal: 27-33
ACC	N/A	
△ 1/2 or 2/2 ▽	Shows view of all satellites in two screen views 1/2 or 2/2	

(cont'd)

System Diagnostic Mode (cont'd)

Yaw Rate

This diagnostic checks the yaw rate sensor in the control unit. This device detects when the vehicle turns, and repositions the vehicle position icon on the map screen. For more detailed information, see the yaw rate sensor theory of operation under System Description (see page 23-137).

- Sensor indicates the voltage output from the yaw rate sensor. It should indicate about 2.500 V when the vehicle is stopped.
- Offset is the reference voltage or standard within the yaw rate sensor. It also should indicate about 2.500 V when the vehicle is stopped.
- A sensor output voltage LOWER than the Offset voltage indicates that the vehicle is turning to the right.
  A sensor output voltage HIGHER than the Offset voltage indicates that the vehicle is turning to the left.
- The yaw rate offset, and sensor should both indicate about 2.500 V when the vehicle is stopped. If either reads zero, or 5.000 V, replace the navigation unit.
- The yaw rate offset and sensor should be within +/—0.01 V of each other when the vehicle is stopped. The sensor value should change relative to the offset as the vehicle turns while driving. If not, replace the navigation unit.

Example: Vehicle stopped

Normal		**Abnormal**	
Offset	2.526 V	Offset	2.526 V
Sensor	2.516—2.536 V	Sensor	2.623 V

Example: Vehicle turning

Normal		**Abnormal**	
Offset	2.526 V	Offset	2.526 V
Sensor	2.678 V (left turn) 2.478 V (right turn)	Sensor	2.623 V (no change on turns)

- Sensitivity study represents the status of the internal tuning function. At initialization, this value starts at 6 and increases to 10 as the internal correction values become more accurate.
- The settings CCW Cal Factor, CW Cal Factor, and Set are for factory use only. THIS SHOULD NEVER BE ADJUSTED.
- For detailed analysis of the yaw rate select tuning.

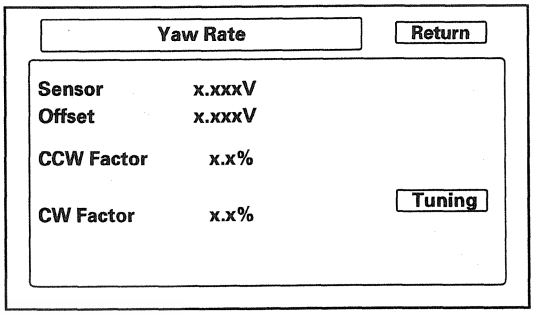

Yaw Rate Tuning

This diagnostic allows you to graphically display problems with the yaw rate sensor.

- The ANG-Disp value accumulates any differences between the offset and sensor voltages (see Yaw Rate diagnostic). When the sensor functions properly, the random changes in these two voltages generally cancels out, so the value is 0. However if one voltage is consistently higher than the other, then the ANG-Disp value accumulates the constant change.
- The Reset button temporarily clears the angular accumulation (ANG-Disp), and clears the display dots.
- Do not touch the CCW, CW, or Set buttons. These are used for factory setup only.

Two tests are explained below. For large problems with the sensor values, the stationary test usually confirms whether the sensor is defective. For yaw rate issues related to driving, do the road test described below.

1. Stationary test: If the VP icon spins in place and the ANG-Disp value slowly increases or decreases in value, the yaw rate sensor is defective. Replace the navigation control unit.

2. Road test: Drive the vehicle on a very straight road. Enter the diagnostic mode, select Yaw rate, and touch the Tuning button. While driving down a straight road, the white dots should trace a straight line across the screen. However, if you are driving on a straight road, and you notice the dots constantly dropping down or heading up as you drive, the navigation control unit's yaw sensor is defective. You can touch Reset to clear ANG-Disp, and dotted lines.

   If either test above fails, please enter Yaw rate sensor defective for the problem description, on the Navigation core return form.

   NOTE: The CCW, CW and Set buttons are disabled and cannot be activated.

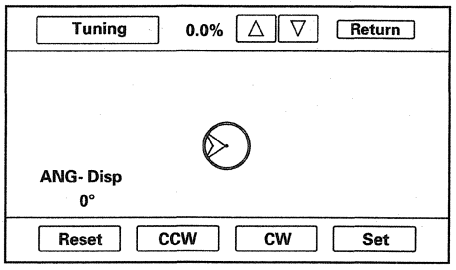

Car Status

Use this screen to confirm that the navigation unit is properly receiving input signals. Signals equal to (0) are OFF, and signals equal to (1) are ON. If the value on the display does not match the actual vehicle status, then check the wire carrying the signal.

- VSP-Vehicle Speed Pulse from PCM (Pin 6 of A-connector)
  a) OFF (0) when vehicle is not moving
  b) ON (1) when vehicle is moving

The VSP comes from the PCM as a dedicated signal. Internally, the navigation unit compares the actual VP on the map against street data to adjust the pulse to speed scaling factor. As this scaling factor becomes more accurate, the Level gradually increases from 0 to 10.

- BACK-Reverse indication from taillight relay (Pin 5 of A-connector)
  a) OFF (0) when the shift lever is in any position other than reverse
  b) ON (1) when the shift lever is in reverse

The Back signal is used by the navigation unit to allow the map screen to show the VP moving backwards when in reverse. This signal is needed because the Speed Pulse has no direction indication.

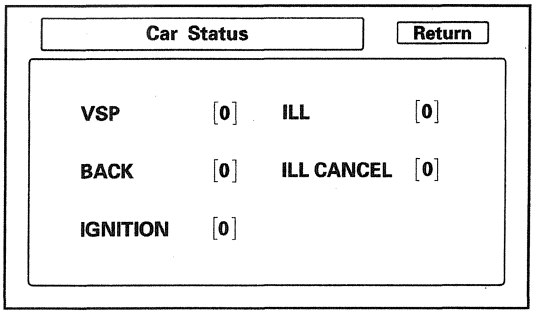

(cont'd)

System Diagnostic Mode (cont'd)

- IGNITION-Ignition Switch Position Indication
  (Pin 1 or 2 of A-connector)
  Detects if the engine is running using information provided over the F-CAN bus.
  a) OFF (0) when the ignition switch position is ACCESSORY (I)
  b) ON (1) when the ignition switch position is ON (II)
- ILL-Illumination Indication
  (Pin 5 of navigation unit B-connector)
  a) OFF (0) when parking lights, or headlights are off
  b) ON (1) when parking lights, or headlights are on

The navigation uses the signal to determine whether to put the navigation screen into the Day or Night brightness mode. (Setup screen 1)

ILL CANCEL
This item detects whether the illumination cancel function is in use.
a) OFF (0) if illumination cancel is not selected
b) ON (1) if illumination cancel is activated

The illumination cancel function is activated by increasing the dash brightness to MAX. The F-CAN bus passes this information from the gauge assembly to the navigation control unit.

NOTE: This illumination cancel function is turned off when the display mode hard button is used. The button is located below and to the left of the interface dial. The illumination cancel function is turned on when you cycle the key.

Version

This screen displays the current version information for the navigation system software. In addition, this screen allows the loading of updated software if requested by the factory, or instructed by a Service Bulletin. Software may be loaded from a CD or a PC card.

- Program Flash: Displays the version of the navi software in memory.
- Program Disc: If displayed, this value represents the version of the navi software on the navi DVD.

  NOTE: The last two letters of the Program Flash or DVD fields indicate which DVD is installed in the unit. The letters KA imply that a United States DVD is installed. If the letters are KC, then a Canada DVD is installed. (See coverage discussion below.)

- IPL, APL, DBOOT, and System uCom, are all for factory use.
- Model: For this model, the field should begin with SJA.
- Download: Do not touch, unless instructed by the factory.

  Check any official Acura service website for more service information about navigation DVDs.

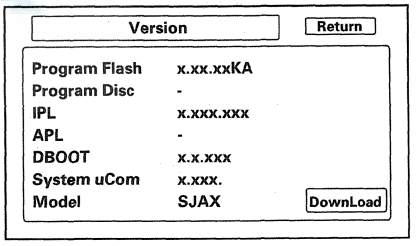

There are two navigation DVDs produced for this model.

- The white DVD labeled United States is for the US market and contains maps for the contiguous 48 US states, Hawaii, and some southern portions of Canada.
  Clients wanting additional northern coverage in Canada, can purchase a Canada DVD by contacting the DVD fulfillment desk.
- The gray DVD labeled Canada, is for the Canada market, and contains maps for all of Canada, plus some of the northern US states. If clients with this DVD require full US coverage (including states like Florida and Texas), they may purchase a United States DVD by contacting the DVD fulfillment desk.

Tire Calibrate

Compass type

As the vehicle moves, the compass system receives speed pulses from the PCM. These pulses are converted using a conversion factor to a mph speed that moves the vehicle position (VP) on the map. The navigation system has an internal tuning function that generates and refines this factor based on actual driving. The Study indicates the status of the tuning. At navigation initialization, it begins at 0, and increases to 10 as the navigation system is used.

- The Auto Tuning is factory set to ON, and should remain on.
- The Study indicates the tuning status. If it is less than 10, the unit is still calibrating.
- The Tire-Cal. Tuning and Set should not be used. It is for factory use only.

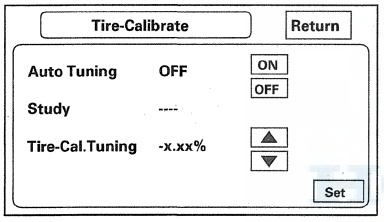

Coverage Area

This screen allows the dealer to select the area that applies to their location. The choice is US (continental) or Hawaii. The default is US. Select the choice (the system may reboot), exit the diagnostic mode, and restart the vehicle.

NOTE: This function is designed to operate only when the vehicle is physically located in the coverage area you select.

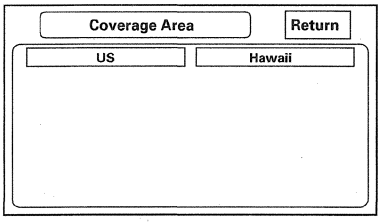

XM (HIP) (USA models)

These screens allow troubleshooting on XM or HIP (AcuraLink) problems. Select the item you want to troubleshoot, and follow the diagnostic instructions.

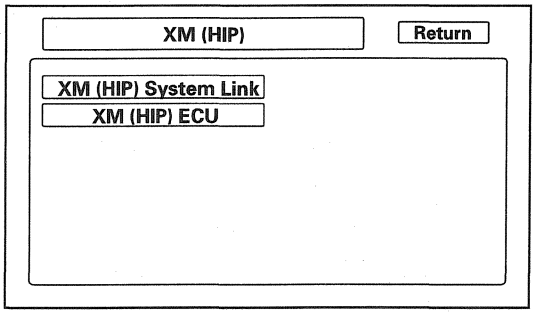

XM (HIP) System Link

This diagnostic tests the wires connecting the XM (HIP) components.

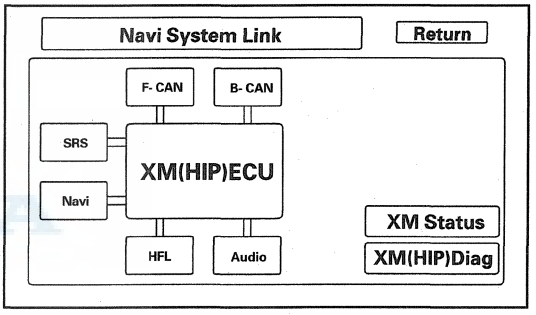

XM Status

You can check the XM status in this screen.

Items	Condition Idicated
XM Reception	• Receiving • Check Antenna • No Signal • Loading • Expired
Traffic Signal Reception	• Receiving • Check Antenna • No Signal • Loading • Expired

(cont'd)

System Diagnostic Mode (cont'd)

Items	Condition Indicated
Traffic Indicator	• TRF (green icon): Traffic information is available. • TRF (white icon): Flow or incident data is not available. • TRF (red icon): No traffic available (flow and incident).
Traffic Data	• OK • Invalid
Traffic Last Update	Last update time and date indicated.
Weather Signal Reception	• Receiving • Check Antenna • No Signal • Loading • Expired
Weather Data	• OK • Invalid
Weather Last Update	Last update time and date indicated.

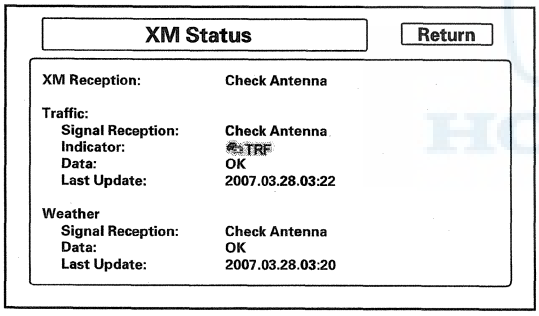

XM (HIP) ECU
Select the item you want to troubleshoot, and follow the diagnostic instructions.

Note: Only select DATA RESET when instructed. Selecting DATA RESET will clear the AcuraLink registration, and the AcuraLink service will reset to the factory default. If the vehicle was already registered for the AcuraLink service, it will have to be reactivated by calling Acura Client Services and asking for the activation before all features will be available. The reactivation will cause the Feature Guide to start over at the first message, which will result in the client getting repeated messages.

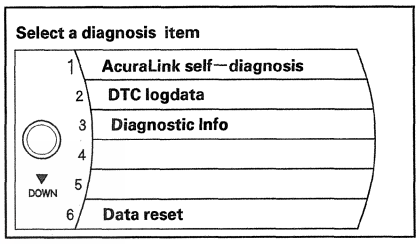

Telematics Self-Diagnosis
This screen used to do self-diagnosis for the XM (HIP).

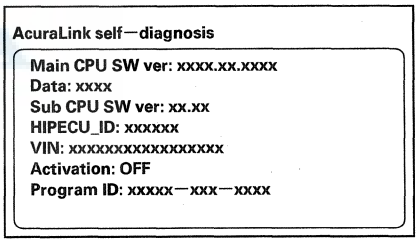

DTC Log Data
You can check the DTC log data in this screen.

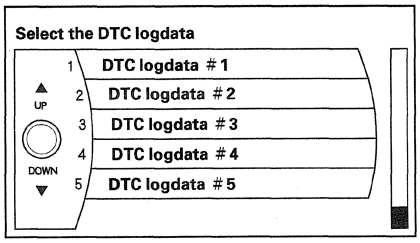

NOTE: When DTC B2200-B2249 is displayed, it is an engineering mode, and is not for trouble diagnosis.

PC Card FAQs

Question	Answer
Where do we buy the flash memory or adaptors, and what do we ask for?	You need a PCMCIA type II adaptor and a flash memory chip. You can purchase them at a computer, or office supply store. The card is the same size and shape as the PC card in the HDS. Adaptors that accept multiple flash types are not recommended.
What memory flash chips will work with what adaptors?	The flash memory devices that have been tested include Compact Flash (CF), and ATA style (like the card in the HDS). Other card types and flash memory chips may work, but have not been tested.
What capacity card do I need for this function?	A memory chip with capacity of 64 MB to 2 GB will work. The two files moved to the card during export are less than a megabyte in size. You can purchase an adapter and flash memory card at a computer or office supply store.
Should the dealer have a dedicated PC card for the Export and Import navigation function?	Yes, treat the PC card as a dedicated special tool that you can use any time you need to transfer the navi personal files to a new navi unit on '08 or later vehicles.
What device can I use to maintain the PC card, and delete files	Any computer store sells USB style PC card readers that accept the card, and a allow you to do file maintenance on your card. Most laptops also accept the card.
Can we move the customer's data to different models (like moving RL navi data to a TSX)?	No, the files are model specific and will only load into a navigation ECU with the same part number.
Can we move the client's data to the same vehicle with a different software version (Like moving from version 4.41 version 4.51)?	The client's files can only be transferred to a new navigation control unit if the Model and the Program Flash shown on the Version screen are the same. Files cannot be transferred from a RL to a TSX (different model code), or '08 to '09 RL (different versions)
Why is the Export button grayed out?	• A PC card with its media memory chip is not inserted properly. • Check the card's edge connector, and the pins inside the navigation unit (with a flashlight) for damage.
Why is the Import button grayed out?	• A PC card with its media memory chip is not inserted. • The model code of the files stored during export do not match the model code of the new navigation ECU. • The version of the files from the original navi ECU are not the same as the version in the new navigation ECU.
Will other files on the card like images or music files prevent the Export/ Import function from working?	No, the system simply adds two small files that are recognized by the new navigation unit when doing the import function. However, if the card is full, the Export function won't work correctly.
Do I have to delete the files on the card after each transfer of the personal data?	After the transfer of personal data to the new navigation control unit, the files remain on the card. Since this is confidential information, Acura recommends deleting these files after the transfer. Please note that each time you export navigation files of the same model and version, the files are overwritten. If you do not delete the file after use, over time the PC card accumulates two files for each version of the Honda navigation equipped models.
If the memory card needs formatting, what format should I use?	It is unlikely that the card will ever need formatting, however, if it does, use the FAT (file allocation table) file system.
I can't enter the navi diagnostic mode to do the Export/Import function. How can I transfer the personal data?	Some internal navigation ECU failures may make it impossible to use the Export/Import function.

(cont'd)

System Diagnostic Mode (cont'd)

Question	Answer
Why won't the Export or Import functions work? What do I check as part of troubleshooting?	• The card may not be fully inserted into the slot. Eject the card, and inspect for warping or damage to the edge connector. Never use excessive force to insert a card. This can damage the pins in the rear of the slot. • The card may not contain files that are recognized by the new navigation unit. Navigation data can only be transferred between navigation units with the same Model code, and with the same navigation Program flash version. • The flash memory chip type may not be accepted by the system. Only Compact Flash, and ATA cards have been tested. • The card's PCMCIA adaptor may prevent a known-good card from being recognized. Avoid multi slot type PCMCIA adaptors that accept several different flash memory types • The card may be full and as a result the files are stored, but without any data. Export and import appear to function, but move nothing. Delete unused files from the card. • There may not be any files on the card. If the card has a write protection switch, make sure it is turned off before using the Export function. • Although flash memory chips are reliable, occasionally they develop bad sectors or other formatting errors that prevents them from accepting files. The card should be reformatted using the FAT format. • The card may have been formatted using the format NTFS. Only the FAT format is accepted by the system. • Hard Disc Drive (HDD) cards may not work properly in the system and can overheat or quit functioning, particularly in a hot vehicle. They are not recommended. • Before doing the import function, ensure that the original navigation DVD is loaded into the new navigation unit and working properly.
Are there any error messages to tell me what is wrong?	There are no error messages associated with the Import/Export feature. Follow the troubleshooting steps above.

Error Message Table

Screen Error Message	Solution
Navigation system is unable to acquire a proper GPS signal.	Make sure there is nothing on the rear shelf blocking the GPS antenna. If not, move the vehicle to an open space away from tall buildings, trees, etc. Aftermarket metallic window tinting and other aftermarket devices can affect the GPS reception.
Navigation unit door is open or No DVD disc installed. Please check system.	Make sure the navigation DVD is the correct color and is not scratched or damaged. Make sure it is installed with the label side up and the navigation unit door is snapped fully closed.
No DVD disc, please check system.	Check that the correct color and version navigation DVD is installed with the label side up.
Display temp is too high. System will shut down until display cools down.	This message appears briefly when the display temperature is too high, and then the display turns off until the temperature cools down. The system turns back on when the display cools down.
Outside temperature is low, system will take a while to start up.	The temperature is below −30 ℃ and the navigation unit has difficulties reading the DVD. The system will start up when the temperate warms up.
DVD disc reading error (unformatted), please consult your dealer.	Check the DVD for the correct color and software version. Also check for deep scratches or other damage. Make sure you are using an official Honda navigation DVD (white in color). The system cannot read other mapping databases or video DVDs. Check any official Honda service website for more service information about the navigation system and software updates.
Route has not been completed. Please try again from a different location.	Routing to or from a place (new area) that is not in the database. Try planning a different route to or from a different location that is clearly displayed on the map (map matched).
No alternate route found. Original route will be guided.	No alternate route method was found. The original route method will be used.
This destination cannot be found in database.	The destination was not found in the database. Try another destination nearby, or select the destination with the interface dial.

DTC Troubleshooting

DTC 1001: FROM System Info Error

NOTE:
- Check the vehicle battery condition first (see page 22-90).
- Before you troubleshoot, make sure to follow the general troubleshooting information (see page 23-119).

1. Turn the ignition switch to LOCK (0), and then back to ON (II).
2. Check for the hard error code (see page 23-126).

   Is DTC 1001 indicated?

   YES—Replace the navigation unit (see page 23-255), because there is an internal problem with the Flash-ROM. ■

   NO—Intermittent failure, the system is OK at this time. If the vehicle repeatedly comes back with the DTC, replace the navigation unit (see page 23-255). ■

DTC 1101: Media Bus Send Error

NOTE:
- Check the vehicle battery condition first (see page 22-90).
- Before you troubleshoot, make sure to follow the general troubleshooting information (see page 23-119).

1. Clear hard error code (see page 23-128).
2. Turn the ignition switch to LOCK (0), and then back to ON (II).
3. Check for the hard error code (see page 23-126).

   Is DTC 1101 indicated?

   YES—Replace the navigation unit (see page 23-255). ■

   NO—Intermittent failure, the system is OK at this time. If the vehicle repeatedly comes back with the DTC, replace the navigation unit (see page 23-255). ■

DTC 1201: DVD High Temp

NOTE:
- Check the vehicle battery condition first (see page 22-90).
- Before you troubleshoot, make sure to follow the general troubleshooting information (see page 23-119).
- This code sets when the internal temperature of the ECU rises above 158 °F (70 °C). The unit is designed to shut down to protect the ECU. This could be caused by an inoperative ECU fan or if the trunk temperature exceed the maximum. Do the troubleshooting when the unit is within the allowable temperature range.

1. Check that the temperature is below 158 °F (70 °C) in the trunk.
2. Clear the hard error code (see page 23-128).
3. Turn the ignition switch to LOCK (0), and then back to ON (II).
4. Check for the hard error code (see page 23-126).

   Is DTC 1201 indicated?

   YES—Replace the navigation unit (see page 23-255). ■

   NO—Intermittent failure, the system is OK at this time. If the vehicle repeatedly comes back with the DTC, replace the navigation unit. ■

DTC 1202: DVD Low Temp

NOTE:
- Check the vehicle battery condition first (see page 22-90).
- Before you troubleshoot, make sure to follow the general troubleshooting information (see page 23-119).
- This code sets when the internal temperature of the ECU falls below −4 °F (−20 °C). The unit is designed to shut down to protect the ECU. This is usually caused by very cold exterior temperatures. Do the troubleshooting when the unit is within the allowable temperature range.

1. Check that the temperature is above −4 °F (−20 °C) in the trunk.
2. Clear the hard error code (see page 23-128).
3. Turn the ignition switch to LOCK (0), and then back to ON (II).
4. Check for the hard error code (see page 23-126).

   Is DTC 1202 indicated?

   YES—Replace the navigation unit (see page 23-255). ■

   NO—Intermittent failure, the system is OK at this time. If the vehicle repeatedly comes back with the DTC, replace the navigation unit. ■

DTC Troubleshooting (cont'd)

DTC 1301: GPS Antenna Error

NOTE:
- Check the vehicle battery condition first (see page 22-90).
- Before you troubleshoot, make sure to follow the general troubleshooting information (see page 23-119).
- Make sure the vehicle is parked outside, away from buildings.
- Aftermarket metallic window tint or electronic devices located near the navigation unit or GPS antenna can potentially interfere with the operation of the navigation system.

1. Clear the hard error code (see page 23-128).
2. Turn the ignition switch to LOCK (0), and then back to ON (II).
3. Check for the hard error code (see page 23-126).

   Is DTC 1301 indicated?

   YES—Go to step 4.

   NO—Intermittent failure, the system is OK at this time. ■
4. Turn the ignition switch to LOCK (0).
5. Check for poor connections or loose terminals at navigation unit connector E (2P).
6. Clear the hard error code.
7. Turn the ignition switch to LOCK (0), and then back to ON (II).
8. Check for the hard error code.

   Is DTC 1301 indicated?

   YES—Replace the GPS Antenna (see page 23-257), then retest. If the DTC does not clear, replace the navigation unit. ■

   NO—Intermittent failure, the system is OK at this time. If the vehicle repeatedly comes back with the DTC, replace the navigation unit (see page 23-255). ■

DTC 1302: GPS Receiver Error 1

NOTE:
- Check the vehicle battery condition first (see page 22-90).
- Before you troubleshoot, make sure to follow the general troubleshooting information (see page 23-119).
- Make sure the vehicle is parked outside, away from buildings.
- Aftermarket metallic window tint or electronic devices located near the navigation unit or GPS antenna can potentially interfere with the operation of the navigation system.

1. Clear the hard error code (see page 23-128).

2. Turn the ignition switch to LOCK (0), and then back to ON (II).

3. Check for the hard error code (see page 23-126).

   Is DTC 1302 indicated?

   YES—Go to step 4.

   NO—Intermittent failure, the system is OK at this time. If the vehicle repeatedly comes back with the DTC, replace the navigation unit. ■

4. Turn the ignition switch to LOCK (0).

5. Check for poor connections or loose terminals at navigation unit connector E (2P).

6. Clear the hard error code.

7. Turn the ignition switch to LOCK (0), and then back to ON (II).

8. Check for the hard error code.

   Is DTC 1302 indicated?

   YES—Replace the GPS Antenna (see page 23-257), then retest. If the DTC does not clear, replace the navigation unit. ■

   NO—Intermittent failure, the system is OK at this time. If the vehicle repeatedly comes back with the DTC, replace the navigation unit. ■

DTC Troubleshooting (cont'd)

DTC 1303: GPS Receiver Error 2

NOTE:
- Check the vehicle battery condition first (see page 22-90).
- Before you troubleshoot, make sure to follow the general troubleshooting information (see page 23-119).
- Make sure the vehicle is parked outside, away from buildings.
- Aftermarket metallic window tint or electronic devices located near the navigation unit or GPS antenna can potentially interfere with the operation of the navigation system.

1. Clear the hard error code (see page 23-128).
2. Turn the ignition switch to LOCK (0), and then back to ON (II).
3. Check for the hard error code (see page 23-126).

Is DTC 1303 indicated?

YES—Replace the navigation unit (see page 23-255). ■

NO—Intermittent failure, the system is OK at this time. If the vehicle repeatedly comes back with the DTC, replace the navigation unit. ■

DTC 1304: Gyro Error 1

NOTE:
- Check the vehicle battery condition first (see page 22-90).
- Before you troubleshoot, make sure to follow the general troubleshooting information (see page 23-119).
- Make sure the vehicle is parked outside, away from buildings.
- Aftermarket metallic window tint or electronic devices located near the navigation unit or GPS antenna can potentially interfere with the operation of the navigation system.

1. Clear hard error code (see page 23-128).
2. Turn the ignition switch to LOCK (0), and then back to ON (II).
3. Check for the hard error code (see page 23-126).

Is DTC 1304 indicated?

YES—Replace the navigation unit (see page 23-255). ■

NO—Intermittent failure, the system is OK at this time. If the vehicle repeatedly comes back with the DTC, replace the navigation unit. ■

DTC 1305: Gyro Error 2: ECU Temp XX ℃

NOTE:
- Check the vehicle battery condition first (see page 22-90).
- Before you troubleshoot, make sure to follow the general troubleshooting information (see page 23-119).
- Make sure the vehicle is parked outside and away from buildings.
- Aftermarket metallic window tint or electronic devices located near the navigation unit or GPS antenna can potentially interfere with the operation of the navigation system.

1. Check that the trunk temperature is between −4 ℉ (−20 ℃) and 158 ℉ (70 ℃).

2. Clear hard error code (see page 23-128).

3. Turn the ignition switch to LOCK (0), and then back to ON (II).

4. Check for the hard error code (see page 23-126).

   Is DTC 1305 indicated?

   YES—Replace the navigation unit (see page 23-255). ■

   NO—Intermittent failure, the system is OK at this time. If the vehicle repeatedly comes back with the DTC, replace the navigation unit. ■

DTC 1306: Vehicle Speed Pulse

NOTE:
- Check the vehicle battery condition first (see page 22-90).
- Before you troubleshoot, make sure to follow the general troubleshooting information (see page 23-119).

1. Clear the hard error code (see page 23-128).

2. Turn the ignition switch to LOCK (0), and then start the engine.

3. Check for the hard error code (see page 23-126).

   Is DTC 1306 indicated?

   YES—Go to step 4.

   NO—Intermittent failure, the system is OK at this time. ■

4. Go into the Self-Diagnosis Mode, and use the Car Status test (see page 23-185) to check the vehicle speed pulse.

5. Drive the vehicle, and watch the VSP signal (see page 23-185).

   Does the VSP signal change from [0] to [1] as you drive?

   YES—Replace the navigation unit (see page 23-255). ■

   NO—Do the symptom troubleshooting for vehicle position icon constantly leaves road, moves erratically or is very far from actual position (see page 23-225). ■

DTC Troubleshooting (cont'd)

DTC 1307: DVD Read Error

NOTE:
- Check the vehicle battery condition first (see page 22-90).
- Check any official Honda service website for more information about the navigation system and software updates.
- Before you troubleshoot, make sure to follow the general troubleshooting information (see page 23-119).

1. Check the navigation DVD.

   Is the navigation DVD the correct color and version for the vehicle and is it scratch free?

   YES—Go to step 2.

   NO—Replace the navigation DVD, and retest. ■

2. Turn the ignition switch to ON (II).

   Is there a DVD error message?

   YES—Go to DVD read error messages (see page 23-234). ■

   NO—Go to step 3.

3. Clear the hard error code (see page 23-128).

4. Turn the ignition switch to LOCK (0), then back to ON (II).

5. Check for the hard error code (see page 23-126).

   Is DTC 1307 indicated?

   YES—Replace the navigation unit (see page 23-255). ■

   NO—Intermittent failure, the system is OK at this time see How to identify navigation DVD versions, and how to inspect a DVD for damage (see page 23-124). If the unit repeatedly cones back with the DTC, replace the navigation unit. ■

DTC 1403: Audio Error 3

NOTE:
- Check the vehicle battery condition first (see page 22-90).
- Before you troubleshoot, make sure to follow the general troubleshooting information (see page 23-119).

1. Clear the hard error code (see page 23-128).

2. Turn the ignition switch to LOCK (0), and then back to ON (II).

3. Check for a hard error code (see page 23-126).

   Is DTC 1403 indicated?

   YES—Replace the navigation display unit (see page 23-256). ■

   NO—Intermittent failure, the system is OK at this time. ■

DTC 1404: Audio Error 4

NOTE:
- Check the vehicle battery condition first (see page 22-90).
- Before you troubleshoot, make sure to follow the general troubleshooting information (see page 23-119).

1. Clear the hard error code (see page 23-128).
2. Turn the ignition switch to LOCK (0), and then back to ON (II).
3. Check for a hard error code (see page 23-126).

   Is DTC 1404 indicated?

   YES—Replace the audio unit (see page 23-106). ■

   NO—Intermittent failure, the system is OK at this time. ■

DTC 1701: R-Camera Error

DTC 2608: R-Camera Diag

NOTE:
- Check the vehicle battery condition first (see page 22-90).
- Before you troubleshoot, make sure to follow the general troubleshooting information (see page 23-119).

1. Clear the hard error code (see page 23-128).
2. Turn the ignition switch to LOCK (0), and then back to ON (II).
3. Go into the Diagnostic Menu, and select the Self-Diagnosis Mode in the Select Diagnosis Items menu (see page 23-166).
4. Check the System Links.

   Is the Rear camera icon red?

   YES—Go to step 5.

   NO—Intermittent failure, the system is OK at this time. ■
5. Check for poor connection(s) or loose terminal(s) at the rearview camera 6P connector and the navigation unit connector E (7P).

   Are the connections OK?

   YES—Go to step 6.

   NO—Repair poor connection(s) or loose terminal(s). ■
6. Turn the ignition switch to LOCK (0).

(cont'd)

DTC Troubleshooting (cont'd)

7. Disconnect the rearview camera 6P connector.
8. Turn the ignition switch to ON (II).
9. Measure the voltage between the rearview camera 6P connector terminal No. 6 and body ground.

REARVIEW CAMERA 6P CONNECTOR

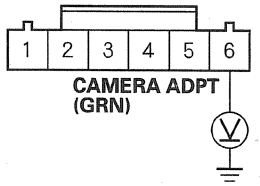

Wire side of female terminals

Is there about 3.0 V?

YES—Replace the rearview camera (see page 23-258). ■

NO—Go to step 10.

10. Measure the voltage between navigation unit connector E (7P) terminal No. 7 and body ground.

NAVIGATION UNIT CONNECTOR (7P)

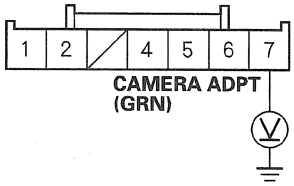

Wire side of female terminals

Is there about 3.0 V?

YES—There is an open in the wire between the navigation unit and the rearview camera. Replace the affected shielded harness. ■

NO—Replace the navigation unit (see page 23-255). ■

DTC 1801: HIP Error

NOTE:
- Check the vehicle battery condition first (see page 22-90).
- Before you troubleshoot, make sure to follow the general troubleshooting information (see page 23-119).
- Check for and resolve any B-CAN DTCs before troubleshooting.
- Check any official Honda service website for any service information about the AcuraLink or software updates.

With AcuraLink

1. Clear the hard error code (see page 23-128).
2. Turn the ignition switch to LOCK (0), and then back to ON (II).
3. Check for a hard error code (see page 23-126).

   Is DTC 1801 indicated?

   YES—Go to step 4.

   NO—Intermittent failure, the system is OK at this time. ■
4. Turn the ignition switch to LOCK (0).
5. Check for poor connections or loose terminals at AcuraLink control unit connector A (32P), and navigation unit connector D (5P).

   Are the connections OK?

   YES—Go to step 6.

   NO—Repair poor connections or loose terminals. ■
6. Turn the ignition switch to ON (II).
7. Check for XM (HIP) communication with the HDS.

   Is the communication OK?

   YES—Go to step 8.

   NO—Do the AcuraLink control unit Troubleshooting. ■

8. Turn the ignition switch to LOCK (0).

9. Disconnect AcuraLink control unit connector A (32P) and navigation unit connector D (5P).

10. Check for continuity between terminals of AcuraLink control unit connector A (32P) according to the table.

From terminal	To terminals
No. 21 (GRY)	No. 17 (GRN), No. 18 (BLK), No. 19 (WHT), No. 20 (RED)

ACURALINK CONTROL UNIT CONNECTOR A (32P)

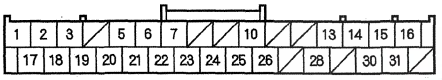

Wire side of female terminals

Is there continuity between any of terminals?

YES—There is a short in the wire(s) between the AcuraLink control unit and the navigation unit. Replace the affected shielded harness. ■

NO—Go to step 11.

11. Check for continuity between body ground and AcuraLink control unit connector A (32P) terminals No. 17, No. 18, No. 19, and No. 20 individually.

ACURALINK CONTROL UNIT CONNECTOR A (32P)

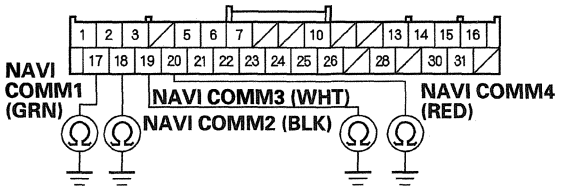

Wire side of female terminals

Is there continuity?

YES—There is a short in the wire(s) between AcuraLink control unit connector A (32P) and body ground. Replace the affected shielded harness. ■

NO—Go to step 12.

12. Connect the AcuraLink control unit connector A (32P) terminals No. 17, No. 18, No. 19, and No. 20 to body ground with a jumper wire.

ACURALINK CONTROL UNIT CONNECTOR A (32P)

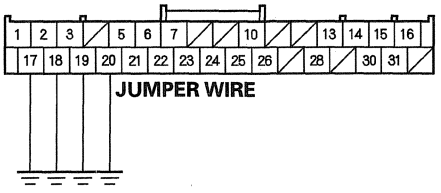

Wire side of female terminals

(cont'd)

DTC Troubleshooting (cont'd)

13. Check for continuity between body ground and navigation unit connector D (5P) terminals No. 1, No. 2, No. 3, and No. 4 individually.

NAVIGATION UNIT CONNECTOR D (5P)

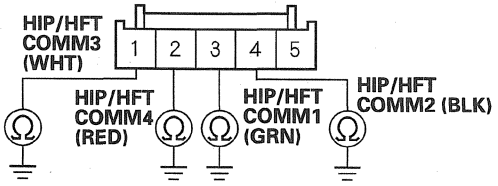

Wire side of female terminals

Is there continuity?

YES—Replace the navigation unit (see page 23-255). ■

NO—There is an open in the wire(s) between AcuraLink control unit connector A (32P) and navigation unit connector D (5P). Replace the affected shielded harness. ■

DTC 1409: Audio Error 9

NOTE:
- Check the vehicle battery condition first (see page 22-90).
- Before you troubleshoot, make sure to follow the general troubleshooting information (see page 23-119).

1. Clear the hard error code (see page 23-128).
2. Turn the ignition switch to LOCK (0), and then back to ON (II).
3. Check for a hard error code (see page 23-126).

Is DTC 1409 indicated?

YES—Check for poor connections or loose terminals at the XM antenna, if they are OK, do the diagnosis for the XM antenna in the audio system. ■

NO—Intermittent failure, the system is OK at this time. ■

DTC 2703: Aircon Diag

NOTE:
- Check the vehicle battery condition first (see page 22-90).
- Check for B-CAN DTCs and resolve them before troubleshooting.
- Before you troubleshoot, make sure to follow the general troubleshooting information (see page 23-119).
- When the ignition switch is in ACCESSORY (I), the A/C unit is turned off. The navigation loses communication with the A/C unit and stores DTC 2703. Therefore, there is a possibility that the system is normal even though DTC 2703 is stored. Check system links (see page 23-166) with the engine running, and if it appears OK, the system is OK at this time. If it is NG, do the troubleshooting.

1. Clear the hard error code (see page 23-128).
2. Turn the ignition switch to LOCK (0), and then quickly back to ON (II).
3. Go into the Diagnostic Menu, and select the Self-Diagnosis Mode in the Select Diagnosis Items menu (see page 23-166).
4. Check the System Links.

   Is the Aircon icon red?

   YES—Go to step 5.

   NO—Intermittent failure, the system is OK at this time. ■
5. Turn the ignition switch to LOCK (0).
6. Disconnect navigation unit connector B (32P).
7. Connect navigation unit connector B (32P) terminal No. 4 to terminals No. 20, and No. 21 with jumper wires.

NAVIGATION UNIT CONNECTOR B (32P)

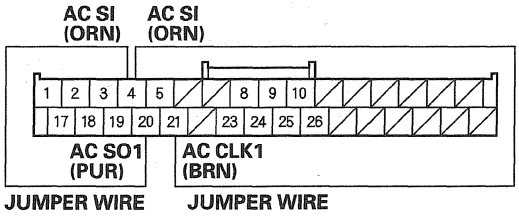

Wire side of female terminals

8. Turn the ignition switch to ON (II).
9. Do the A/C Self-Diagnostic Mode (see page 23-166).

   Are both HEAT/VENT indicators solid with the remaining icons blinking?

   YES—Replace the navigation unit (see page 23-255). ■

   NO—Go to step 10.
10. Turn the ignition switch to LOCK (0), then disconnect the jumper wire.
11. Disconnect climate control unit connecter B (12P).

(cont'd)

DTC Troubleshooting (cont'd)

12. Connect the climate control unit 40P connector terminal No. 6 to terminals No. 7, and No. 8 with jumper wires.

CLIMATE CONTROL UNIT 40P CONNECTOR

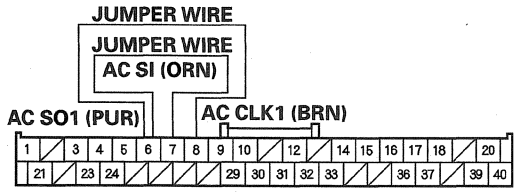

Wire side of female terminals

13. Check for continuity between navigation unit connector B (32P) terminals No. 20 and No. 4, and between terminals No. 20 and No. 21.

NAVIGATION UNIT CONNECTOR B (32P)

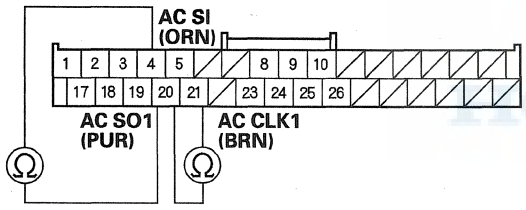

Wire side of female terminals

Is there continuity?

YES—Go to step 14.

NO—Repair an open in the wire(s) between the navigation control unit and the climate control unit. ■

14. Disconnect the jumper wires from the climate control unit 40P connector.

15. Check for continuity between body ground and navigation unit connector B (32P) terminals No. 4, No. 20, and No. 21 individually.

NAVIGATION UNIT CONNECTOR B (32P)

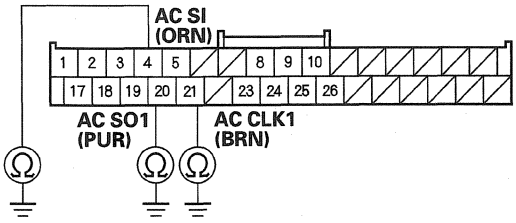

Wire side of female terminals

Is there continuity?

YES—Repair a short to body ground in the wire(s) between the navigation control unit and the climate control unit. ■

NO—Go to step 16.

16. Turn the ignition switch to ON (II).

17. Measure the voltage between body ground and navigation unit connector B (32P) terminals No. 4, No. 20, and No. 21 individually.

NAVIGATION UNIT CONNECTOR B (32P)

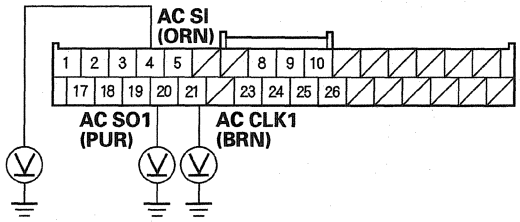

Wire side of female terminals

Is there more than 0.2 V?

YES—Repair a short to power in the wire(s) between the navigation control unit and the climate control unit. ■

NO—Go to step 18.

18. Turn the ignition switch to LOCK (0).

19. Check for continuity between the terminal of navigation unit connector B (32P) according to the table.

From terminal	To terminals
B4 (ORN)	B20 (PUR), B21 (BRN)
B20 (PUR)	B21 (BRN)

NAVIGATION UNIT CONNECTOR B (32P)

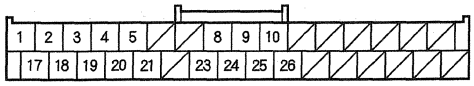

Wire side of female terminals

Is there continuity?

YES—There is a short in the wire(s) between the navigation control unit and the climate control unit. Replace the affected shielded harness. ■

NO—Replace the climate control unit (see page 21-84). ■

DTC Troubleshooting (cont'd)

DTC 2601: Display Diag: Connect

NOTE:
- Check the vehicle battery condition first (see page 22-90).
- Check for B-CAN DTCs and resolve them before troubleshooting.
- Before you troubleshoot, make sure to follow the general troubleshooting information (see page 23-119).

1. Clear the hard error code (see page 23-128).
2. Turn the ignition switch to LOCK (0), and then back to ON (II).
3. Go into the Diagnostic Menu, and select the Self-Diagnosis Mode in the Select Diagnosis Items menu (see page 23-166).
4. Check the System Links.

   Is the Display icon red?

   YES—Go to step 5.

   NO—Intermittent failure, the system is OK at this time.■
5. Check for poor connections or loose terminals at navigation unit connector B (32P), AcuraLink control unit connector A (32P), USB adapter unit connector A (14P), HandsFreeLink control unit 28P connector and XM receiver connector A (14P).

   Are the connections OK?

   YES—Go to step 5.

   NO—Repair poor connections or loose terminals, and recheck the Self-Diagnosis Mode (see page 23-166).■
6. Turn the ignition switch to LOCK (0).
7. Disconnect navigation unit connector B (32P) and the navigation display unit 20P connector.
8. Connect navigation unit connector B (32P) terminals No. 10 and No. 26 with a jumper wire.

NAVIGATION UNIT CONNECTOR B (32P)

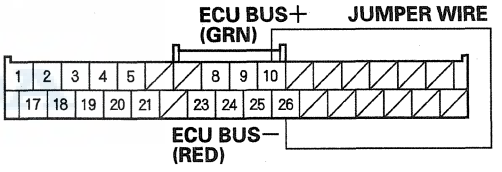

Wire side of female terminals

9. Check for continuity between navigation display unit 20P connector terminals No. 5 and No. 15.

NAVIGATION DISPLAY UNIT 20P CONNECTOR

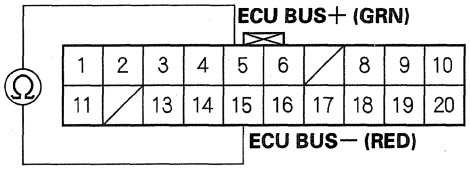

Wire side of female terminals

Is there continuity?

YES—Go to step 10.

NO—There is an open in the wire between the navigation unit and the navigation display unit. Replace the affected shielded harness. ■

10. Disconnect the jumper wire.

11. Disconnect the AcuraLink control unit connector A (32P) USB adapter unit connector A (14P), the HandsFreeLink control unit 28P connector and XM receiver A (14P) connector.

12. Check for continuity between navigation display unit 20P connector terminals No. 3 and No. 13, and terminals No. 5 and No. 15.

NAVIGATION DISPLAY UNIT 20P CONNECTOR

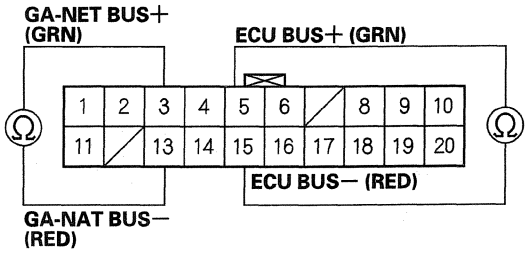

Wire side of female terminals

Is there continuity?

YES—There is a short in the wire(s). Replace the affected shielded harness. ■

NO—Go to step 13.

13. Check for continuity between body ground and navigation display unit 20P connector terminals No. 5 and No. 15 individually.

NAVIGATION DISPLAY UNIT 20P CONNECTOR

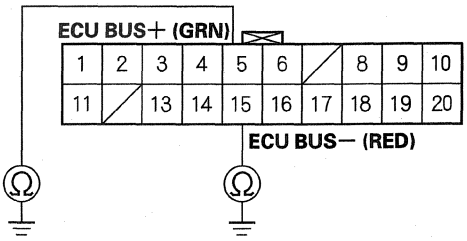

Wire side of female terminals

Is there continuity?

YES—There is a short to body ground in the wire(s) between the navigation display unit and the navigation unit. Replace the affected shielded harness. ■

NO—Go to step 14.

(cont'd)

DTC Troubleshooting (cont'd)

14. Check for continuity between navigation display unit 20P connector terminals No. 5 and No. 15 to No. 14.

NAVIGATION DISPLAY UNIT 20P CONNECTOR

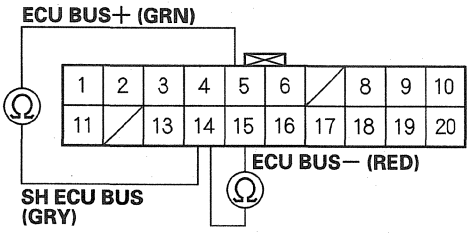

Wire side of female terminals

Is there continuity?

YES—Short in the wire(s). Replace the affected shielded harness. ■

NO—Go to step 15.

15. Reconnect the all connectors, then turn the ignition switch to ON (II).

16. Go into the Diagnostic Menu, and select the Self-Diagnosis Mode in the Select Diagnosis Items menu (see page 23-166).

17. Check the System Links.

Is the Display icon red?

YES—Go to step 18.

NO—Intermittent failure, the system is OK at this time. ■

18. Turn the ignition switch to LOCK (0).

19. Disconnect audio unit connector C (14P), and then turn the ignition switch to ON (II).

20. Go into the Diagnostic Menu and Select the Self-Diagnosis Mode in the Select Diagnosis Items Menu (see page 23-166).

21. Select the Display.

Is the Display icon red?

YES—Go to step 22.

NO—Internal short circuit of in the audio unit. Replace the audio unit (see page 23-106). ■

22. Turn the ignition switch to LOCK (0).

23. Connect the audio unit connector C (14P).

24. Disconnect the AcuraLink control unit connector A (32P) or XM receiver connector A (14P), and then turn the ignition switch to ON (II).

25. Go into the Diagnostic Menu, and Select the Self-Diagnosis Mode in the Select Diagnosis Items Menu (see page 23-166).

26. Select the Display.

Is the Display icon red?

YES—Go to step 27.

NO—Replace the AcuraLink control unit (XM receiver) (see page 23-111), or XM receiver unit (see page 23-112). ■

27. Turn the ignition switch to LOCK (0).

28. Connect the AcuraLink control unit connector A (32P) or XM receiver unit connector A (14P).

29. Disconnect the USB adapter unit connector A (14P), and then turn the ignition switch to ON (II).

30. Go into the Diagnostic Menu, and Select the Self-Diagnosis Mode in the Select Diagnosis Items Menu (see page 23-166).

31. Select the Display.

    Is the Display icon red?

    YES—Go to step 32.

    NO—Replace the USB adapter unit (see page 23-114). ■

32. Turn the ignition switch to LOCK (0).

33. Connect the USB adapter unit connector A (14P).

34. Disconnect the HandsFreeLink control unit 28P connector, and then turn the ignition switch to ON (II).

35. Go into the Diagnostic Menu, and Select the Self-Diagnosis Mode in the Select Diagnosis Items Menu (see page 23-166).

36. Select the Display.

    Is the Display icon red?

    YES—Replace the navigation display unit (see page 23-256). ■

    NO—Replace the HandsFreeLink control unit (see page 23-339). ■

DTC 2602: Display Diag: ROM

NOTE:
- Check the vehicle battery condition first (see page 22-90).
- Check for B-CAN DTCs and resolve them before troubleshooting.
- Before you troubleshoot, make sure to follow the general troubleshooting information (see page 23-119).

1. Clear the hard error code (see page 23-128).

2. Turn the ignition switch to LOCK (0), and then back to ON (II).

3. Go into the Diagnostic Menu, and select the Self-Diagnosis Mode in the Select Diagnosis Items menu (see page 23-166).

4. Select the Display.

    Is the ROM NG?

    YES—Replace the navigation display unit (see page 23-256). ■

    NO—Intermittent failure, the system is OK at this time. If the unit repeatedly comes back with the DTC, replace the navigation display unit. ■

DTC Troubleshooting (cont'd)

DTC 2603: Display Diag: RAM

NOTE:
- Check the vehicle battery condition first (see page 22-90).
- Check for B-CAN DTCs and resolve them before troubleshooting.
- Before you troubleshoot, make sure to follow the general troubleshooting information (see page 23-119).

1. Clear the hard error code (see page 23-128).
2. Turn the ignition switch to LOCK (0), and then back to ON (II).
3. Go into the Diagnostic Menu, and select the Self-Diagnosis Mode in the Select Diagnosis Items menu (see page 23-166).
4. Select the Display.

   Is the RAM NG?

   YES—Replace the navigation display unit (see page 23-256). ■

   NO—Intermittent failure, the system is OK at this time. If the unit repeatedly comes back with the DTC, replace the navigation display unit. ■

DTC 2605: H/U Diag: Connect

NOTE:
- Check the vehicle battery condition first (see page 22-90).
- Check for B-CAN DTCs and resolve them before troubleshooting.
- Before you troubleshoot, make sure to follow the general troubleshooting information (see page 23-119).

1. Clear the hard error code (see page 23-128).
2. Turn the ignition switch to LOCK (0), and then back ON (II).
3. Check the Error History (see page 23-126).

   Is Hard Error 2601 indicated?

   YES—Do the 2601 troubleshooting.

   NO—Go to step 4.
4. Go into the Diagnostic Menu, and select the Self-Diagnosis Mode in the Select Diagnosis Items menu (see page 23-166).
5. Select the System Links.

   Is the Radio icon red?

   YES—Go to step 6.

   NO—Intermittent failure, the system is OK at this time. ■
6. Turn the ignition switch to LOCK (0).

7. Check for poor connections or loose terminals at audio unit connector C (14P), and the navigation display unit 20P connector.

   Are there connections OK?

   YES—Go to step 8.

   NO—Repair poor connections or loose terminals, and recheck the Self-Diagnosis Mode (see page 23-166). ■

8. Disconnect audio unit connector C (14P), and the navigation display unit 20P connector.

9. Connect the audio unit connector C (14P) terminals No. 9 and No. 10 with a jumper wire.

AUDIO UNIT CONNECTOR C (14P)

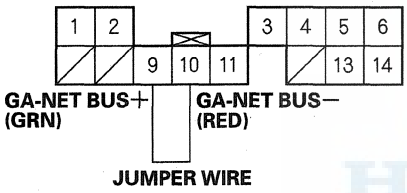

Wire side of female terminals

10. Check for continuity between the navigation display unit 20P connector terminals No. 3 and No. 13.

NAVIGATION DISPLAY UNIT 20P CONNECTOR

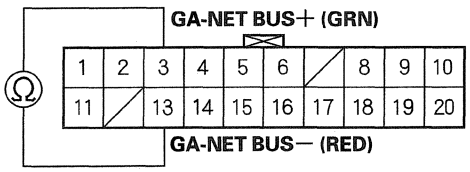

Wire side of female terminals

Is there continuity?

YES—Do the Audio unit troubleshooting. ■

NO—There is an open in the wire(s) between the audio unit and the navigation display unit. Replace the affected shielded harness. ■

DTC Troubleshooting (cont'd)

DTC 2607: XM Diag

NOTE:
- Check the vehicle battery condition first (see page 22-90).
- Before you troubleshoot, make sure to follow the general troubleshooting information (see page 23-119).

1. Clear the hard error code (see page 23-128).
2. Turn the ignition switch to LOCK (0), and then back ON (II).
3. Check the Error History (see page 23-126).

   Is Hard Error 2601 indicated?

   YES—Do the 2601 troubleshooting.

   NO—Go to step 4.
4. Go into the Diagnostic Menu, and select the Self-Diagnosis Mode in the Select Diagnosis Items menu (see page 23-166).
5. Check the System Links.

   Is the XM (HIP) or XM icon red?

   YES—Go to step 6.

   NO—Intermittent failure, the system is OK at this time. ■
6. Turn the ignition switch to LOCK (0).
7. Check for poor connections or loose terminals at AcuraLink control unit (XM receiver) connector, or XM receiver unit connector, satellite signal antenna connector, and the navigation display unit 20P connector.

   Are there connections OK?

   YES—Go to step 8.

   NO—Repair poor connections or loose terminals. ■
8. Disconnect AcuraLink control unit (XM receiver) connector A (32P) or XM receiver unit connector A (14P), and the navigation display unit 20P connector.
9. Connect AcuraLink control unit (XM receiver) connector A (32P), or XM receiver unit connector A (14P) terminals No. 30 [or No. 9] and No. 31 [or No. 10] with a jumper wire.
   [ ] : Without AcuraLink

ACURALINK CONTROL UNIT (XM RECEIVER) CONNECTOR A (32P)

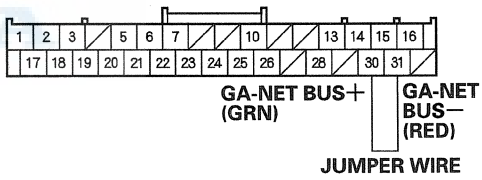

Wire side of female terminals

XM RECEIVER CONNECTOR A (14P)

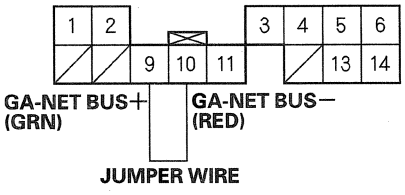

Wire side of female terminals

10. Check for continuity between navigation display unit 20P connector terminals No. 5 and No.15.

NAVIGATION DISPLAY UNIT 20P CONNECTOR

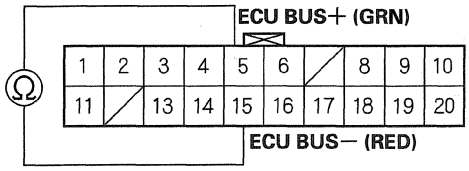

Wire side of female terminals

Is there continuity?

YES—Do the AcuraLink control unit (XM receiver), or XM receiver troubleshooting. ■

NO—There is an open in the wire between the navigation display unit and the AcuraLink control unit (XM receiver), or the XM receiver. Replace the affected shielded harness. ■

DTC 2609: VRAM Diag

NOTE:
- Check the vehicle battery condition first (see page 22-90).
- Before you troubleshoot, make sure to follow the general troubleshooting information (see page 23-119).

1. Clear the hard error code (see page 23-128).

2. Turn the ignition switch to LOCK (0), and then back to ON (II).

3. Go into the Diagnostic Menu, and select the Self-Diagnosis Mode in the Select Diagnosis items menu (see page 23-166).

4. Select the System Links, then select the ECU Info.

   Is V-RAM OK indicated?

   YES—Intermittent failure, the system is OK at this time. If the vehicle repeatedly comes back with the DTC, replace the navigation unit. ■

   NO—Replace the navigation unit (see page 23-255). ■

HONDA

DTC Troubleshooting (cont'd)

DTC 2610: DRAM Diag

NOTE:
- Check the vehicle battery condition first (see page 22-90).
- Before you troubleshoot, make sure to follow the general troubleshooting information (see page 23-119).

1. Clear the hard error code (see page 23-128).
2. Turn the ignition switch to LOCK (0), and then back to ON (II).
3. Go into the Diagnostic Menu, and select the Self-Diagnosis Mode in the Select Diagnosis items menu (see page 23-166).
4. Select the System Links, then select the ECU Info.

   Is D-RAM OK indicated?

   YES—Intermittent failure, the system is OK at this time. If the vehicle repeatedly comes back with the DTC, replace the navigation unit. ■

   NO—Replace the navigation unit (see page 23-255). ■

DTC 2701: GPS Diag: Antenna

NOTE:
- Check the vehicle battery condition first (see page 22-90).
- Before you troubleshoot, make sure to follow the general troubleshooting information (see page 23-119).
- Make sure the vehicle is parked outside, away from buildings.
- Check for electronic aftermarket accessories (possibly hidden) mounted near the GPS antenna or the navigation unit.
- Check for aftermarket metallic window tint.

1. Clear the hard error code (see page 23-128).
2. Turn the ignition switch to LOCK (0), and then back to ON (II).
3. Go into the Diagnostic Menu, and select the Self-Diagnosis Mode in the Select Diagnosis items menu (see page 23-166).
4. Select the System Links, then select the GPS Ant.

   Is Antenna OK indicated?

   YES—Intermittent failure, the system is OK at this time. ■

   NO—Go to step 5.

5. Turn the ignition switch to LOCK (0).
6. Check for poor connections at navigation unit connector F (2P).

   Is the connection OK?

   YES—Replace the GPS antenna. ■

   NO—Repair poor connection. ■

DTC 2702: GPS Diag: Receiver in Navi

NOTE:
- Check the vehicle battery condition first (see page 22-90).
- Before you troubleshoot, make sure to follow the general troubleshooting information (see page 23-119).
- Make sure the vehicle is parked outside, away from buildings.
- Check for electronic aftermarket accessories (possibly hidden) mounted near the GPS antenna or the navigation unit.
- Check for aftermarket metallic window tint.

1. Clear the hard error code (see page 23-128).
2. Turn the ignition switch to LOCK (0), and then back to ON (II).
3. Go into the Diagnostic Menu, and select the Self-Diagnosis Mode in the Select Diagnosis items menu (see page 23-166).
4. Select the System Links, then select the GPS Ant.

   Is Receiver in Navi ECU OK indicated?

   YES—Intermittent failure, the system is OK at this time. If the vehicle repeatedly comes back with the DTC, replace the navigation unit. ■

   NO—Replace the navigation unit (see page 23-255). ■

DTC 2704: HIP Diag

NOTE:
- Check the vehicle battery condition first (see page 22-90).
- Before you troubleshoot, make sure to follow the general troubleshooting information (see page 23-119).

1. Clear the hard error code (see page 23-128).
2. Turn the ignition switch to LOCK (0), and then back to ON (II).
3. Go into the Diagnostic Menu, and select the Self-Diagnosis Mode in the Select Diagnosis Items menu (see page 23-166).
4. Check the System Links.

   Is the XM (HIP) icon red?

   YES—Go to step 5.

   NO—Intermittent failure, the system is OK at this time. ■
5. Turn the ignition switch to LOCK (0).
6. Check for XM (HIP) communication with the HDS.

   Is the communication OK?

   YES—Go to step 7.

   NO—Do the AcuraLink control unit troubleshooting (B-CAN system diagnosis test mode A) (see page 22-131). ■

(cont'd)

DTC Troubleshooting (cont'd)

7. Turn the ignition switch to LOCK (0).

8. Disconnect AcuraLink control unit connector A (32P) and navigation unit connector D (5P).

9. Check for continuity between the terminals of AcuraLink control unit connector A (32P) according to the table.

From terminal	To terminals
No. 21 (GRY)	No. 17 (GRN), No. 18 (BLK), No. 19 (WHT), No. 20 (RED)

ACURALINK CONTROL UNIT CONNECTOR A (32P)

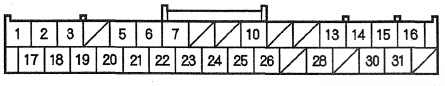

Wire side of female terminals

Is there continuity between any of terminals?

YES—There is a short in the wire(s) between the AcuraLink control unit and navigation unit. Replace the affected shielded harness. ■

NO—Go to step 10.

10. Check for continuity between body ground and AcuraLink control unit connector A (32P) terminals No. 17, No. 18, No. 19 and No. 20 individually.

ACURALINK CONTROL UNIT CONNECTOR A (32P)

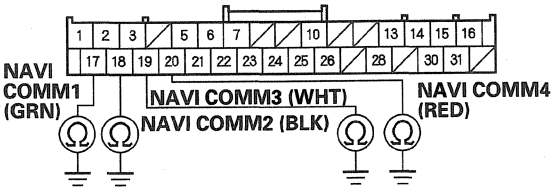

Wire side of female terminals

Is there continuity?

YES—There is a short in the wire(s) between AcuraLink control unit connector A (32P) and body ground. Replace the affected shielded harness.

NO—Go to step 11.

11. Disconnect navigation unit connector D (5P).

12. Connect the AcuraLink control unit connector A (32P) terminal No. 17 to body ground with a jumper wire.

ACURALINK CONTROL UNIT CONNECTOR A (32P)

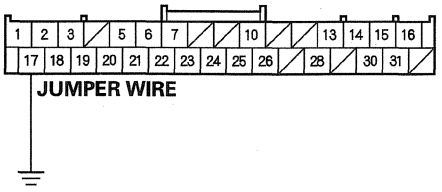

Wire side of female terminals

13. Check for continuity between body ground and navigation unit connector D (5P) terminals No. 1, No. 2, No. 3 and No. 4 individually.

NAVIGATION UNIT CONNECTOR D (5P)

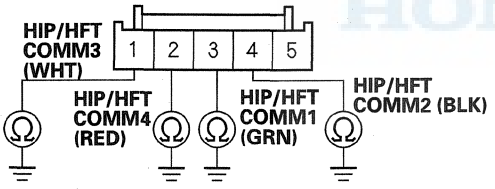

Wire side of female terminals

Is there continuity?

YES—Replace the navigation unit (see page 23-255). ■

NO—There is a short in the wire(s) between AcuraLink control unit connector A (32P) and navigation unit connector D (5P). Replace the affected shielded harness. ■

DTC 2705: HFL Diag

NOTE:
- Check the vehicle battery condition first (see page 22-90).
- Before you troubleshoot, make sure to follow the general troubleshooting information (see page 23-119).

With AcuraLink

1. Clear the hard error code (see page 23-128).

2. Turn the ignition switch to LOCK (0), and then back to ON (II).

3. Go into the Diagnostic Menu, and select the Self-Diagnosis Mode in the Select Diagnosis Items menu (see page 23-166).

4. Check the System Links.

   Is the XM (HIP) icon red?

   YES—Go to DTC 2704 troubleshooting (see page 23-215). ■

   NO—Go to step 5.

5. Go into the Diagnostic Menu, and select the Self-Diagnosis Mode in the Select Diagnosis Items menu (see page 23-166).

6. Check the System Links.

   Is the HFL icon red?

   YES—Go to step 7.

   NO—Intermittent failure, the system is OK at this time. ■

7. Turn the ignition switch to LOCK (0).

8. Turn the ignition switch to ON (II).

9. Check for HFL DTCs with the HDS.

   Are there any HFL DTCs indicated?

   YES—Do the HFL DTC troubleshooting. ■

   NO—Go to step 10.

(cont'd)

DTC Troubleshooting (cont'd)

10. Turn the ignition switch to LOCK (0).

11. Disconnect the HandsFreeLink control unit 28P connector and AcuraLink control unit connector A (32P).

12. Check for continuity between the terminals of the HandsFreeLink control unit 28P connector according to the table.

From terminal	To terminals
No. 8 (GRY)	No. 6 (BLK), No. 7 (GRN), No. 20 (RED), No. 21 (WHT)

HANDSFREELINK CONTROL UNIT 28P CONNECTOR

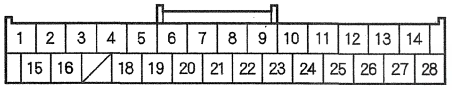

Wire side of female terminals

Is there continuity between any of the terminals?

YES—There is a short in the wire(s) between the HandsFreeLink control unit and the AcuraLink control unit. Replace the affected shielded harness. ■

NO—Go to step 13.

13. Connect AcuraLink control unit connector A (32P) terminal No. 17 to body ground with a jumper wire.

ACURALINK CONTROL UNIT CONNECTOR A (32P)

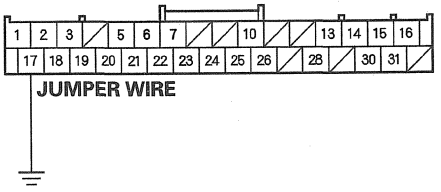

Wire side of female terminals

14. Check for continuity between body ground and HandsFreeLink control unit 28P connector terminals No. 6, No. 7, No. 20 and No. 21 individually.

HANDSFREELINK CONTROL UNIT 28P CONNECTOR

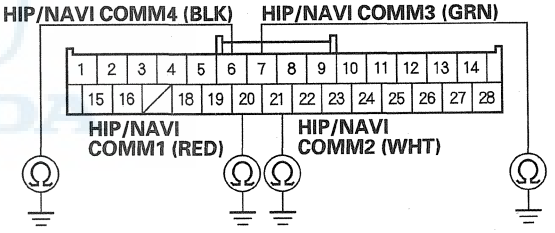

Wire side of female terminals

Is there continuity?

YES—There is a short in the wire(s) between AcuraLink control unit connector A (32P) and the HandsFreeLink control unit 28P connector. ■

NO—Replace the HandsFreeLink control unit (see page 23-339). ■

DTC 2705: HFL Diag

NOTE:
- Check the vehicle battery condition first (see page 22-90).
- Before you troubleshoot, make sure to follow the general troubleshooting information (see page 23-119).

Without AcuraLink

1. Clear the hard error code (see page 23-128).
2. Turn the ignition switch to LOCK (0), and then back to ON (II).
3. Go into the Diagnostic Menu, and select the Self-Diagnosis Mode in the Select Diagnosis Items menu (see page 23-166).
4. Check the System Links.

   Is the HFL icon red?

   YES—Go to step 5.

   NO—Intermittent failure, the system is OK at this time. ■
5. Turn the ignition switch to LOCK (0).
6. Turn the ignition switch to ON (II).
7. Check for DTCs with the HDS.

   Are there any HFL DTCs indicated?

   YES—Do the HFL DTC troubleshooting. ■

   NO—Go to step 8.
8. Disconnect the HandsFreeLink control unit 28P connector and navigation unit connector D (5P).
9. Check for continuity between terminals of the HandsFreeLink control unit 28P connector according to the table.

From terminal	To terminals
No. 8 (GRY)	No. 6 (BLK), No. 7 (GRN), No. 20 (RED), No. 21 (WHT)

HANDSFREELINK CONTROL UNIT 28P CONNECTOR

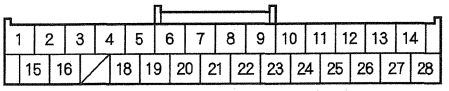

Wire side of female terminals

Is there continuity between any of terminals?

YES—There is a short in the wire(s) between the HandsFreeLink control unit and the navigation unit. Replace the affected shielded harness. ■

NO—Go to step 10.

(cont'd)

DTC Troubleshooting (cont'd)

10. Connect the HandsFreeLink control unit 28P connector terminals No. 6, No. 7, No. 20, and No. 21 to body ground with a jumper wire.

HANDSFREELINK CONTROL UNIT 28P CONNECTOR

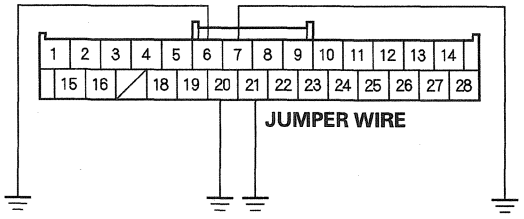

Wire side of female terminals

11. Check for continuity between body ground and navigation unit connector D (5P) terminals No. 1, No. 2, No. 3, and No. 4 individually.

NAVIGATION UNIT CONNECTOR D (5P)

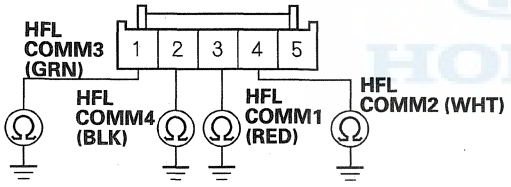

Wire side of female terminals

Is there continuity?

YES—There is a short in the wire(s) between navigation unit connector D (5P) and the HandsFreeLink control unit 28P connector. Replace the affected shielded harness. ■

NO—Replace the navigation unit (see page 23-255). ■

DTC 2706: Gyro Diag: ECU Temp XX ℃

NOTE: Before you troubleshoot, make sure to follow the general troubleshooting information (see page 23-119).

1. Check that the trunk temperature is between −4 ℉ (−20 ℃) and 158 ℉ (70 ℃).
2. Clear the hard error code (see page 23-128).
3. Turn the ignition switch to LOCK (0), and then back ON (II).
4. Check for the hard error code (see page 23-126).

Is DTC 2706 indicated?

YES—Replace the navigation unit (see page 23-255). ■

NO—Intermittent failure, the system is OK at this time. If the unit repeatedly comes back with the DTC, replace the navigation unit. ■

DTC 2707: Mic Diag

NOTE:
- Check the vehicle battery condition first (see page 22-90).
- Before you troubleshoot, make sure to follow the general troubleshooting information (see page 23-119).

1. Clear the hard error code (see page 23-128).
2. Turn the ignition switch to LOCK (0), and then back to ON (II).
3. Go into the Diagnostic Menu, and select the Self-Diagnosis Mode in the Select Diagnosis items menu (see page 23-166).
4. Select the System Links.

   Is the Mic icon red?

   YES—Go to step 5.

   NO—Go to step 8.
5. Turn the ignition switch to LOCK (0).
6. Check for poor connections or loose terminals at the HandsFreeLink control unit 28P connector, the roof console 28P connector, and navigation control unit connector D (5P).

   Are the connections OK?

   YES—Go to step 7.

   NO—Repair poor connections or loose terminals. ■
7. Check for DTCs with the HDS.

   Is DTC B1775 or B1776 indicated?

   YES—Troubleshooting the indicated DTC. ■

   NO—Go to step 10.
8. Select the Mic in the System Links.
9. Press the HFL TALK button on the steering wheel, then check the Mic Level (see page 23-181).

   Is the microphone level OK?

   YES—Intermittent failure, the system is OK at this time. ■

   NO—Replace the HFL-navigation microphone (see page 23-339). ■
10. Measure the voltage between body ground and the roof console 28P connector terminals No. 4 and No. 28 individually.

ROOF CONSOLE 28P CONNECTOR

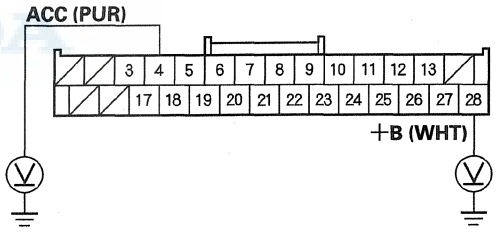

Wire side of female terminals

Is there battery voltage?

YES—Go to step 11.

NO—Repair open in the wire(s). ■

(cont'd)

DTC Troubleshooting (cont'd)

11. Turn the ignition switch to LOCK (0).

12. Check for continuity between the roof console 28P connector terminal No. 13 and body ground.

ROOF CONSOLE 28P CONNECTOR

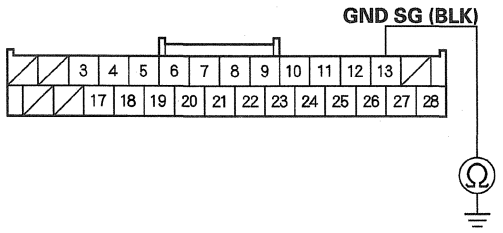

Wire side of female terminals

Is there continuity?

YES—Go to step 13.

NO—Repair open in the ground wire to G601. ■

13. Disconnect the roof console 28P connector and the HandsFreeLink control unit 28P connector.

14. Check for continuity between HandsFreeLink control unit 28P connector terminals No. 13 and No. 14 to terminal No. 12.

HANDSFREELINK CONTROL UNIT 28P CONNECTOR

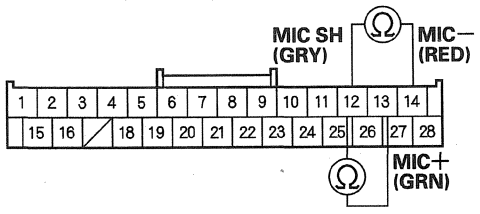

Wire side of female terminals

Is there continuity?

YES—There is a short in the harness. Replace the affected shielded harness. ■

NO—Replace the HFL/navigation microphone (see page 23-339). ■

Symptom Troubleshooting

No picture is displayed

Diagnostic Test: Self-Diagnosis Mode

NOTE:
- Check the vehicle battery condition first (see page 22-90).
- Check if ☼ ☽ button has been pressed, and turned off the display (see owner's manual for more information).
- Check the connectors for poor connections or loose terminals.
- Before troubleshooting, make sure you have the anti-theft code for the navigation system.
- Make sure that the correct DVD color and version are installed.
- Inspect the DVD for dirt or damage.
- Check any official Honda service website for more service information about the navigation system.

1. Check the No. 5 (7.5 A), No. 7 (10 A) fuse and No. 32 (10 A) fuse in the driver's under-dash fuse/relay box, and reinstall the fuses if they are OK.

   Are the fuses OK?

   YES—Go to step 2.

   NO—Replace the fuse, and recheck. ■

2. Turn the ignition switch to ACCESSORY (I).

3. Operate the radio, and listen to the audio.

   Can you hear the audio?

   YES—Go to step 4.

   NO—Check the ACC circuit or refer to the audio system troubleshooting. ■

4. Turn the ignition switch to ON (II).

5. Measure the voltage between body ground and navigation unit connector A (8P) terminals No. 1 and No. 2 individually.

NAVIGATION UNIT CONNECTOR A (8P)

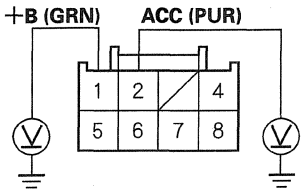

Wire side of female terminals

Is there battery voltage?

YES—Go to step 6.

NO—If the +B wire does not have voltage, repair open in the wire between the driver's under-dash fuse/relay box and the navigation unit. If the ACC wire does not have voltage, repair open in the wire between the driver's under-dash fuse/relay box and the navigation unit. ■

6. Measure the voltage between navigation unit connector A (8P) terminal No. 4 and body ground.

NAVIGATION UNIT CONNECTOR A (8P)

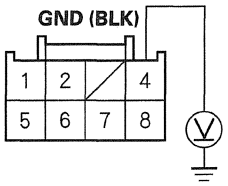

Wire side of female terminals

Is there less than 0.2 V?

YES—Go to step 7.

NO—Repair an open or high resistance in the wire between the navigation unit and body ground (G602) (see page 22-42). ■

(cont'd)

Symptom Troubleshooting (cont'd)

7. Do the forced starting of the display (see page 23-254).

   Is the diagnosis menu of the picture diagnosis displayed?

   YES—Go into Self-Diagnosis Mode (see page 23-166) to check the links. ■

   NO—Go to step 8.

8. Shield the display unit from the sun with your hand, and check that the display is back lit (only back light is ON.).

   Can you see the back light?

   YES—Replace the navigation unit (see page 23-255), and retest. If the problem is still present, replace the navigation display unit (see page 23-256). ■

   NO—Go to step 9.

9. Turn the ignition switch to ON (II).

10. Measure the voltage between body ground and navigation display unit 20P connector terminals No. 1 and No. 2 individually.

NAVIGATION DISPLAY UNIT 20P CONNECTOR

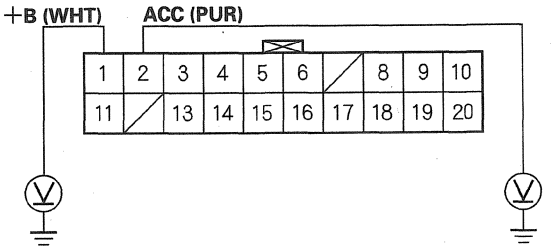

Wire side of female terminals

Is there battery voltage?

YES—Go to step 11.

NO—If the +B wire does not have voltage, repair an open in the wire between the driver's under-dash fuse/relay box and the navigation display unit 20P connector. If the ACC wire does not have voltage, repair open in the wire between the driver's under-dash fuse/relay box and the navigation display unit 20P connector. ■

11. Measure the voltage between navigation display unit 20P connector terminal No. 10 and body ground.

NAVIGATION DISPLAY UNIT 20P CONNECTOR

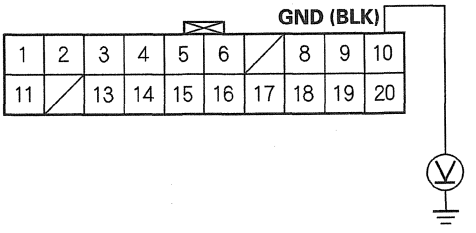

Wire side of female terminals

Is there less than 0.2 V?

YES—Replace the navigation display unit. ■

NO—Repair an open or poor connections between the navigation display unit and body ground (G501) (see page 22-32). ■

Vehicle position icon constantly leaves road, moves erratically, or is displayed very far from actual vehicle position

NOTE:
- Check the vehicle battery condition first (see page 22-90).
- Check that the GPS antenna is plugged in.
- This is not the same condition as when driving off-road (or on a fire or logging road). This condition is caused by a loss of map matching from a bad sensor input. Check for aftermarket metallic window tinting or other objects that can block the GPS signal. Always do the Map matching (see page 23-122) before proceeding with the troubleshooting.
- Make sure that the correct DVD color and version are installed.
- Inspect the DVD for dirt or damage.
- Check any official Honda service website for more service information about the navigation system.
- Check the GPS signal reception in an open area.

1. Check the GPS icon on the navigation screen.
   Is the GPS icon white?
   YES—Do the troubleshooting for GPS icon is white or not shown (see page 23-230). ■
   NO—Go to step 2.
2. Go into the Self-Diagnosis Mode, and use the Yaw Rate test (see page 23-184) to check the yaw rate sensor.
3. Go into the Self-Diagnosis Mode, and use the Car Status test (see page 23-185) to check the vehicle speed pulse.
   Are the yaw rate sensor and vehicle speed pulse OK?
   YES—The condition may be normal. Check to see if the condition occurs in the same place in a known-good vehicle. If it does, the problem could be in the database. Go to step 4.
   NO—If the problem is the yaw rate sensor, replace the navigation unit (see page 23-255). If the problem is the vehicle speed pulse, check for an open in the wire between the navigation unit and the PCM. If the wire is OK, troubleshoot the vehicle speed signal circuit. ■
4. Substitute a known-good navigation unit, and check to see if the problem occurs in the same place.
   Does the problem occur in the same place?
   YES—The problem is in the database. Report the problem according to the Navigation System Manual under Reporting Errors. ■
   NO—Replace the original navigation unit (see page 23-255). ■

Picture is missing a color or tone or is an odd color

NOTE:
- Check the vehicle battery condition first (see page 22-90).
- Check the connectors for poor connections or loose terminals.
- Make sure that the correct DVD color and version are installed.
- Inspect the DVD for dirt or damage.
- Check any official Honda service website for more service information about the navigation system.
- Check the navigation screen settings for brightness, contrast, and black level, and check the color screen for map color and menu color.
- Before troubleshooting, make sure you have the anti-theft codes for the audio system and the navigation system.
- After troubleshooting, enter the anti-theft codes for the audio system and the navigation system.
- Check for aftermarket accessories that may interfere with the navigation system.

1. Go into the Detail Information & Settings select Monitor Check, and use RGB Color test under Monitor Check (see page 23-172).

   Are the red, green, and blue colored circles shown?

   YES—The system is OK at this time. ■

   NO—Go to step 2.

2. Turn the ignition switch to LOCK (0).

3. Disconnect navigation unit connector B (32P) and the navigation display unit 20P connector.

4. Check for loose terminals at navigation unit connector B (32P) and the navigation display unit 20P connector.

   Are there loose terminals?

   YES—Repair the terminal. ■

   NO—Go to step 5.

(cont'd)

Symptom Troubleshooting (cont'd)

5. Check for continuity between the terminals of navigation unit connector B (32P) and the navigation display unit 20P connector according to the table.

From terminal		To terminals	
Navigation unit	Navigation display unit	Navigation unit	Navigation display unit
B3 (GRY)	20 (GRY)	B1 (WHT)	8 (WHT)
		B2 (RED)	9 (RED)
		B17 (YEL)	18 (YEL)
		B18 (BRN)	19 (BRN)
		B19 (BLU)	17 (BLU)

NAVIGATION UNIT CONNECTOR B (32P)

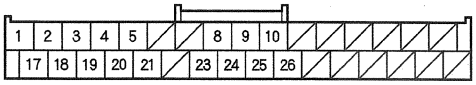

Wire side of female terminals

NAVIGATION DISPLAY UNIT 20P CONNECTOR

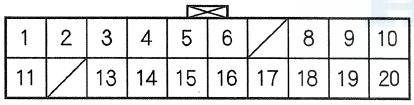

Wire side of female terminals

Is there continuity between any of the terminals?

YES—There is a short in the wire(s) between the navigation unit and the navigation display unit. Replace the affected shielded harness. ■

NO—Go to step 6.

6. Check for continuity between the appropriate terminals of navigation unit connector B (32P) and the navigation display unit 20P connector based on the missing color(s).

Missing color	Navigation unit connector B (32P)	Navigation display unit 20P connector	Wire color
Blue	B17	18	YEL
Green	B2	9	RED
Red	B1	8	WHT

NAVIGATION UNIT CONNECTOR B (32P)

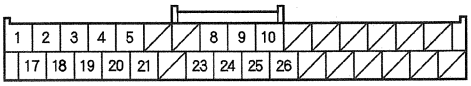

Wire side of female terminals

NAVIGATION DISPLAY UNIT 20P CONNECTOR

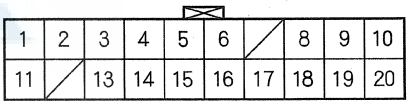

Wire side of female terminals

Is there continuity?

YES—Go to step 7.

NO—There is an open in the circuit between the navigation display unit and the navigation unit. Check for poor connections or loose terminals at the navigation display unit and the navigation unit. If a poor connection or loose terminal is found, replace the affected shielded harness. ■

7. Check for continuity between the appropriate terminals of navigation unit connector B (32P) and the navigation display unit 20P connector based on the missing color(s).

Missing color	Navigation unit connector B (32P)	Navigation display unit 20P connector
Blue	B17	10, 20
Green	B2	10, 20
Red	B1	10, 20

NAVIGATION UNIT CONNECTOR B (32P)

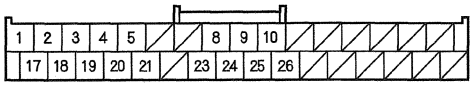

Wire side of female terminals

NAVIGATION DISPLAY UNIT 20P CONNECTOR

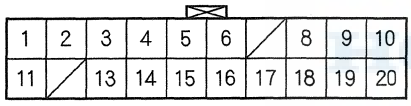

Wire side of female terminals

Is there continuity?

YES—There is a short to body ground in the circuit between the navigation display unit and the navigation unit. Replace the affected shielded harness. ■

NO—Replace the navigation unit. If the problem is still unresolved, replace the navigation display unit (see page 23-256). ■

Picture has lines or rolls

Diagnostic Test: Monitor Check

NOTE:
- Check the vehicle battery condition first (see page 22-90).
- Always compare the screen image to a known-good vehicle. If the screen looks the same, inform the client that it is a characteristic of the system.
- Check the connectors for poor connections or loose terminals.
- Make sure that the correct DVD color and version are installed.
- Inspect the DVD for dirt or damage.
- Check any official Honda service website for more service information about the navigation system.
- Check the navigation screen settings for brightness, contrast, and black level, and check the color screen for map color and menu color.
- Before troubleshooting, make sure you have anti-theft codes for the audio system and the navigation system.
- After troubleshooting, enter the anti-theft codes for the audio system and the navigation system.

1. Check for electronic aftermarket accessories (possibly hidden) mounted near the navigation display unit or the navigation unit.

   Are there any electronic accessories?

   YES—Disable the accessories, and recheck. ■

   NO—Go to step 2.

2. Start up the navigation screen.

   Is the picture scrolling horizontally (left to right or right to left)?

   YES—Check for an open or short to ground in the C SIG wire from navigation unit connector B (32P) terminal No. 18 to navigation display unit 20P connector terminal No. 19. Also check for a short to ground between the navigation display unit 20P connector terminals No. 19 and No. 20. ■

   NO—Go to step 3.

(cont'd)

Symptom Troubleshooting (cont'd)

3. Go into the Detail Information & Settings select Monitor Check, and use RGB Color diagnostic under Monitor Check (see page 23-172).

   Is the picture missing a red, green or blue color?

   YES—Do troubleshooting for the picture is missing a color or tone or is an odd color (see page 23-225). ■

   NO—Go to step 4.

4. Turn the ignition switch to LOCK (0).

5. Substitute a known-good navigation display unit (see page 23-256), and recheck.

   Is the picture OK?

   YES—Check for loose connections, then replace the original navigation display unit (see page 23-256). ■

   NO—Check for loose connections and recheck. If a poor connection or loose terminal is found, replace the shielded harness. If no poor or loose terminals are found, substitute a known-good navigation unit (see page 23-255), and recheck. If the problem is gone, replace the original navigation unit (see page 23-255). ■

Interface dial buttons do not work

NOTE:
- Check the vehicle battery condition first (see page 22-90).
- Confirm the correct DVD color and version disc is installed in the navigation unit (see page 23-123) as the wrong DVD or software version can cause a hardware malfunction.
- Check the connectors for poor connections or loose terminals.
- Make sure that the correct DVD color and version are installed.
- Inspect the DVD for dirt or damage.
- Check any official Honda service website for more service information about the navigation system.
- Before troubleshooting, make sure you have the anti-theft codes for the audio system and the navigation system.
- After troubleshooting, enter the anti-theft codes for the audio system and the navigation system.

1. Start the vehicle.

2. Go into the Detail Information & Settings select Unit Check, and use Hard Key test under Unit Check (see page 23-174).

   Do the interface dial buttons work properly?

   YES—The system is OK at this time. ■

   NO—Go to step 3.

3. Measure the voltage between the interface dial 5P connector terminal No. 4 and body ground.

INTERFACE DIAL 5P CONNECTOR

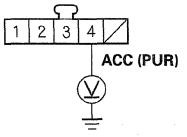

Wire side of female terminals

   Is there battery voltage?

   YES—Go to step 4.

   NO—Repair an open in the wire between the driver's under-dash fuse/relay box and the interface dial. ■

4. Turn the ignition switch to LOCK (0).

5. Check for continuity between the interface dial 5P connector terminal No. 3 and body ground.

INTERFACE DIAL 5P CONNECTOR

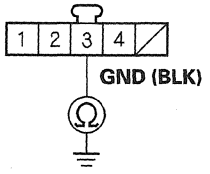

Wire side of female terminals

Is there continuity?

YES—Go to step 6.

NO—Repair open in the wire between the interface dial and body ground (G506) (see page 22-38). ■

6. Check for continuity between navigation unit connector B (32P) terminal No. 23 and interface dial 5P connector terminal No. 1.

NAVIGATION UNIT CONNECTOR B (32P)
Wire side of female terminals

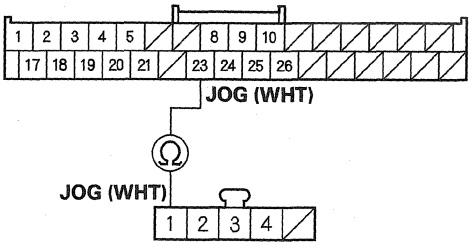

INTERFACE DIAL 5P CONNECTOR
Wire side of female terminals

Is there continuity?

YES—Go to step 7.

NO—There is an open in the circuit between the interface dial and the navigation unit. Replace the affected shielded harness. ■

7. Check for continuity between navigation unit connector B (32P) terminals No. 23 and No. 25.

NAVIGATION UNIT CONNECTOR B (32P)

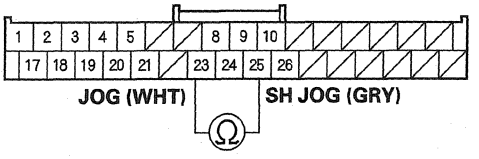

Wire side of female terminals

Is there continuity?

YES—There is a short in the wire. Replace the affected shielded harness. ■

NO—Go to step 8.

8. Substitute a known-good interface dial (see page 23-256), and recheck.

Is the system OK?

YES—Replace the original interface dial (see page 23-256). ■

NO—Replace the navigation unit (see page 23-255). ■

Symptom Troubleshooting (cont'd)

GPS icon is white or not shown

Diagnostic Test: Self-Diagnosis Mode

NOTE:
- Check the vehicle battery condition first (see page 22-90).
- With good reception, the icon is normally green.
- Make sure the GPS antenna is plugged in.
- Check for any aftermarket accessories or metallic window tinting that may be interfering with the GPS signal.
- Make sure the vehicle is parked outside, away from buildings.
- Refer to GPS Information (see page 23-182) for real-time satellite reception display.

1. Check for aftermarket metallic window tint on the rear window and electronic aftermarket accessories (possibly hidden) mounted near the GPS antenna or the navigation unit.

   Is there aftermarket metallic window tint or electronic accessories?

   YES—Remove tint or the accessories, and recheck. ■

   NO—Go to step 2.

2. Turn the ignition switch to ON (II).

3. Go into the Self-Diagnosis Mode, and use the System Links diagnostic (see page 23-166) to check the GPS antenna.

   Is the GPS Ant icon red?

   YES—Check for a kinked, crushed, or disconnected GPS antenna wire. If icon is still red, replace the GPS antenna (see page 23-257). ■

   NO—Check that nothing is blocking the GPS antenna located under the package shelf, and recheck. Substitute a known-good GPS antenna, and recheck. ■

   - If the symptom is gone, replace the GPS antenna.
   - If the symptom is still present, substitute a known-good navigation unit, and recheck. If the symptom is gone, replace the original navigation unit (see page 23-255).

Voice guidance cannot be heard, is broken up, or there is static

Diagnostic Test: Self-Diagnosis Mode

NOTE:
- Check the vehicle battery condition first (see page 22-90).
- Check the navigation volume level (see Owner's Manual).
- Check the connectors for poor connections or loose terminals.
- If the Hard Error Code stored, check the Hard Error Code troubleshooting first.
- Make sure that the correct DVD color and version are installed.
- Inspect the DVD for dirt or damage.
- Before troubleshooting, make sure you have the anti-theft codes for the audio system and the navigation system.
- After troubleshooting, enter the anti-theft codes for the audio system and the navigation system.

1. Turn the ignition switch to ON (II).

2. Press the SET-UP button.

3. Check the volume and voice feedback setting for the navigation system in set-up.

   Is either set to OFF?

   YES—Set the voice feedback to ON, and select an audible level for the volume. ■

   NO—Go to step 4.

4. Check the audio system operation.

   Can you hear the audio system?

   YES—Go to step 5.

   NO—Troubleshoot the audio system. ■

5. Select the Self-Diagnosis mode.

6. Check for error code to the Error History.

   Is the Hard Error Code stored?

   YES—Refer to the Hard Error Code troubleshooting. ■

   NO—Go to step 7.

7. Substitute and a known-good audio unit, and recheck.

   Is the system OK?

   YES—Replace the audio unit (see page 23-106). ■

   NO—Replace the navigation unit (see page 23-255). ■

Voice control does not work/respond

Diagnostic Test: Mic Level

NOTE:
- Check the vehicle battery condition first (see page 22-90).
- Make sure that the correct DVD color and version are installed.
- Check any official Honda service website for more service information about the navigation system.
- Before assuming that a voice complaint is hardware related, ensure that the voice control system is being operated correctly.
  - Make sure you are on the correct screen when trying to issue a voice command. For instance, the command "Find the nearest Italian Restaurant" only works on Map screen. (See the Navigation System manual for a complete list of allowed voice commands for the information being displayed).
  - Close the windows and sunroof.
  - Set the fan speed to low (1 or 2).
  - Adjust the air flow from the air conditioning vents so that they do not blow against the microphone on the ceiling.
  - Pause after pressing the navigation TALK button then give a voice command clearly in a natural speaking voice.
    If the system cannot recognize your command, speak louder.
  - If you speak a command with something in your mouth, or your voice is too husky, or high-pitched, the system may misunderstand your command.
- Check the connectors for poor connections or loose terminals.
- Check for a loose roof console microphone; if it's loose, tighten it.
- Before troubleshooting, make sure you have the anti-theft codes for the audio system and the navigation system.
- After troubleshooting, enter the anti-theft codes for the audio system and the navigation system.
- Determine if the problem only happens to one person, or everyone who uses the system.
- If the system only has a problem with one person's voice, this should be considered a system limitation.

(cont'd)

Symptom Troubleshooting (cont'd)

1. Turn the ignition switch to ON (II).

2. Measure the voltage between body ground and roof console 28P connector terminals No. 4 and No. 28 individually.

ROOF CONSOLE 28P CONNECTOR

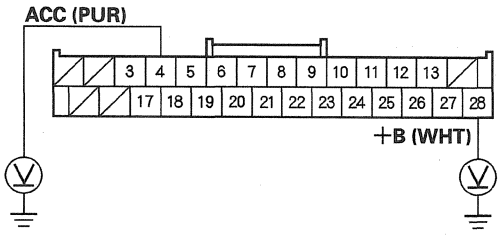

Wire side of female terminals

Is there battery voltage?

YES—Go to step 3.

NO—If the +B wire does not have voltage, repair open in the wire between the driver's under-dash fuse/relay box and the roof console 28P connector. If the ACC wire does not have voltage, repair open in the wire between the driver's under-dash fuse/relay box and the roof console 28P connector. ■

3. Measure the voltage between roof console 28P connector terminal No. 13 and body ground.

ROOF CONSOLE 28P CONNECTOR

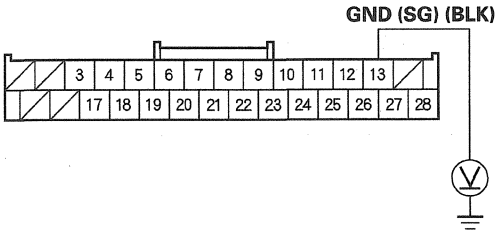

Wire side of female terminals

Is there less than 0.2 V?

YES—Go to step 4.

NO—Repair an open or high resistance in the wire between the roof console and body ground (G601) (see page 22-40). ■

4. Go into the Self-Diagnosis Mode select Mic Icon Menu, and use the Mic Level test under Functional Set-up (see page 23-181) to check the operation of the Talk and Back buttons.

Are the navigation TALK and BACK buttons operational?

YES—Go to step 5.

NO—Check for an open or short to ground on navigation unit connector C (16P) No. 12 terminal. ■

5. Use the Mic Level diagnostic under Functional Set-up (see page 23-181) to check the operation of the microphone.

Is the microphone operational?

YES—Check the operation of the voice control system (see the Navigation System Manual). ■

NO—Go to step 6.

6. Turn the ignition switch to LOCK (0).
7. Disconnect the HFL control unit.
8. Disconnect navigation unit connector C (16P).
9. Check for continuity between body ground and navigation unit connector C (16P) terminals No. 8 and No. 16 individually.

NAVIGATION UNIT CONNECTOR C (16P)

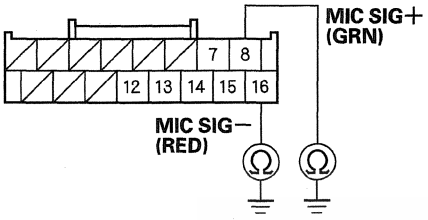

Wire side of female terminals

Is there continuity?

YES—Replace the affected shielded harness. ■

NO—Go to step 10.

10. Check for continuity between navigation unit connector C (16P) terminals No. 8 and No. 16.

NAVIGATION UNIT CONNECTOR C (16P)

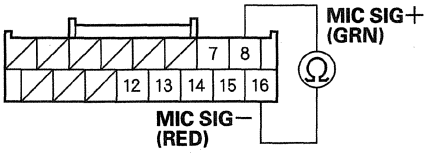

Wire side of female terminals

Is there continuity?

YES—Replace the affected shielded harness. ■

NO—Go to step 11.

11. Check for continuity between navigation unit connector C terminals No. 8 and No 15, and between terminals No. 8 and No. 16.

NAVIGATION UNIT CONNECTOR C (16P)

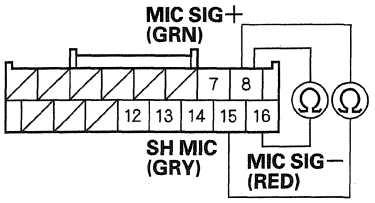

Wire side of female terminals

Is there continuity?

YES—Replace the affected shielded harness. ■

NO—Substitute known-good components in this order until the problem goes away: ■

- Microphone
- HFL unit
- Navigation Unit

HONDA

Symptom Troubleshooting (cont'd)

DVD read error messages

Diagnostic Test: Car Status

NOTE:
- Check the vehicle battery condition first (see page 22-90).
- Confirm the correct DVD color and version disc is installed in the navigation unit (see page 23-124).
- Refer to General Troubleshooting for a list of common DVD screen error messages and the probable causes (see page 23-191).
- Check any official Honda service website for more service information about the navigation system.
- Go into the Diagnostic mode and use the ECU Info diagnostic (see page 23-174) to check the status of the DVD cover.
- Inspect the navigation DVD for scratches or damage.
- The following troubleshooting is for the error message shown on the error messages table (see page 23-191).

1. Check the DVD-ROM reading surface for scratches and finger prints.

   Are there any scratches or finger prints on the DVD-ROM reading surface?

   YES—Clean or replace the DVD-ROM (see page 23-254). ■

   NO—If the problem occurs occasionally when the system is cold, this is normal. If the problem occurs frequently when driving, replace the navigation unit (see page 23-255). ■

Navigation cannot control HVAC by voice command

NOTE:
- Check the vehicle battery condition first (see page 22-90).
- Check the connectors for poor connections or loose terminals.
- Check for and resolve all CAN DTCs before troubleshooting the navigation system.
- If the Hard Error Code stored, check the Hard Error Code troubleshooting first.
- Before troubleshooting, make sure you have the anti-theft codes for the audio system and the navigation system.
- After troubleshooting, enter the anti-theft codes for the audio system and the navigation system.
- Verify that the correct navigation unit is installed for this model. Go into the Diagnostic mode and use Version (see page 23-186).
- Make sure that the correct DVD color and version are installed.
- Check any official Honda service website for more service information about the navigation system.

1. Connect the HDS to the DLC. Check for B-CAN or F-CAN DTCs in the data list.

   Are there any DTCs in the B-CAN or F-CAN systems?

   YES—Troubleshoot and repair all CAN related DTCs, then retest. ■

   NO—Go to step 2.

2. Turn the ignition switch to ON (II).

3. Select the Self-Diagnosis mode.

4. Check for error code to the Error History.

   Is there a Hard Error Code stored?

   YES—Refer to the Hard Error Code troubleshooting. ■

   NO—Go to step 5.

5. Substitute a known-good climate control unit. Reconnect connector, and retest.

   Does the symptom go away?

   YES—Replace the original climate control unit (see page 21-84). ■

   NO—Replace the navigation unit (see page 23-255). ■

Display day/night mode does not work or does not work properly

NOTE:
- Turn the headlight on, and check that the dash brightness setting is not set to high.
- Check the connectors for poor connections or loose terminals.
- Always check for and resolve all CAN DTCs before troubleshooting the navigation system.
- Verity that the correct navigation unit is installed for this model. Go into the Diagnostic mode and use Version (see page 23-186).
- Make sure that the correct DVD color and version are installed.
- Inspect the DVD for dirt or damage.
- Check any official Honda service website for more service information about the navigation system.

1. Turn the headlights on, and adjust the dash brightness up and down, then to the middle range.

   Does the display change to day and night modes when turning the headlights on and off?

   YES—The system is OK at this time. ■

   NO—Go to step 2.

2. Cover the sunlight sensor on the dash, then turn the headlights on and off.

   Does the navigation display dim and brighten normally?

   YES—The system is OK at this time. ■

   NO—Check the ILL+ circuit for an open or short to ground between the navigation display to the gauge control module. If OK, substitute known-good units in this order and recheck the system: ■

   - Navigation unit
   - Climate control unit
   - Gauge control module

Symptom Troubleshooting (cont'd)

System locks up or freezes constantly

NOTE:
- Check the vehicle battery condition first (see page 22-90).
- Always check for and resolve all CAN DTCs before troubleshooting the navigation system.
- Verify that the correct navigation unit is installed for this model. Go into the Diagnostic mode, and use Version (see page 23-186).
- Make sure that the correct DVD color and version are installed.
- Inspect the DVD for dirt or damage.
- Check any official Honda service website for more service information about the navigation system.
- Before troubleshooting, make sure you have the anti-theft codes for the audio system and the navigation system.
- After troubleshooting, enter the anti-theft codes for the audio system and the navigation system.
- Check the DVD for damage or scratches.
- Check the connectors for poor connections or loose terminals.

1. Turn the ignition switch to ON (II).

2. Remove the DVD, and check the DVD reading surface for scratches and finger prints.

   Are there any scratches or finger prints on the DVD-ROM reading surface?

   YES—Clean or replace the DVD-ROM (see page 23-254) and recheck. ■

   NO—Go to step 2.

3. Turn the ignition switch to LOCK (0), and then back to ON (II).

   Does the system reboot, lock up, or freeze?

   YES—Replace the navigation unit. ■

   NO—The system is OK at this time. Go into the Diagnostic mode, and use the Unit Check diagnostic (see page 23-174) to check the navigation unit and display panel control unit status. If any status are NG, replace the affected units. ■

Vehicle icon wanders across the map when driving (does not follow a displayed road) or map vehicle ICON spins

NOTE:
- Check the vehicle battery condition first (see page 22-90).
- This is not the same condition as when driving off-road (or on a fire or logging road).
- This condition is caused by a loss of map matching from a bad sensor input. Check for aftermarket or other objects that can block the GPS signal. Always perform Map matching (see page 23-122) before proceeding with the troubleshooting.
- Always check for and resolve all CAN DTCs before troubleshooting the navigation system.
- Verify that the correct navigation unit is installed for this model. Go into the Diagnostic mode, and use Version (see page 23-186).
- Make sure that the correct DVD color and version are installed.
- Check for aftermarket metallic window tinting.
- Inspect the DVD for dirt or damage.
- Check any official Honda service website for more service information about the navigation system.
- Before troubleshooting, make sure you have the anti-theft codes for the audio system and the navigation system.
- After troubleshooting, enter the anti-theft codes for the audio system and the navigation system.
- Check the DVD for damage or scratches.
- Check the connectors for poor connections or loose terminals.

1. Check the GPS icon on the navigation screen.

   Is the GPS icon white or missing?

   YES—Do the troubleshooting for GPS icon is white or not shown (see page 23-230). ■

   NO—Go to step 2.

2. Go into the Self-Diagnostic Mode, and use the Yaw Rate diagnostic (see page 23-184) to check the yaw rate sensor.

   Is the yaw rate sensor OK?

   YES—Go to step 3.

   NO—Replace the navigation unit (see page 23-255). ■

3. Go into the Diagnostic mode, and use the Car Status diagnostic (see page 23-185) to check the vehicle speed pulse (VSP) and the BACK signals.

   Are the vehicle speed pulse and the BACK signals OK?

   YES—The symptom may be a characteristic of the system. Check to see if the symptom occurs in the same place in a known-good vehicle. If it does, the problem could be in the database. Go to step 4.

   NO—
   - If the problem is the vehicle speed pulse, troubleshoot the vehicle speed signal circuit. BRN wire for open or short. If OK, swap a known-good PCM. If the problem or symptom goes away, replace the original PCM.
   - If the BACK signal is indicated ON (II), when in any shift lever position other than reverse, troubleshoot the MICU. ■

4. Substitute a known-good navigation unit, and check to see if the problem occurs in the same place.

   Does the problem occur in the same place?

   YES—The problem is in the database and should be considered a characteristic of the system. Report the problem according to the Navigation System Manual under Reporting Errors, and look for improvements in future databases. ■

   NO—Replace the navigation unit (see page 23-255). ■

Navigation system does not accept security code

NOTE:
- Check the vehicle battery condition first (see page 22-90).
- The system dose not operate without the 4-digit security (anti-theft) code. Follow the this procedure. (After 10 consecutive tries, you must cycle the key to continue trying)
- The Navigation System Diagnosis and Core Return Form is available on ISIS, under Job aids, and can be printed out for recording this information. This information will help the remain facility determine what caused the failure.
- Always check for and resolve all CAN DTCs before troubleshooting the navigation system.
- Verity that the correct navigation unit is installed for this model. Go into the Diagnostic mode, and use Version (see page 23-186).
- Check the connectors for poor connections or loose terminals.
- Before troubleshooting, make sure you have the anti-theft codes for the audio system and the navigation system.
- Make sure that the correct DVD color and version are installed.
- Inspect the DVD for dirt or damage.
- Check any official Honda service website for more service information about the navigation system.

1. Go into the Diagnostic mode, and use the ECU Info under the Unit Check diagnosis (see page 23-174). A brief diagnostic runs for 20 seconds, and the serial number is displayed.

   Is the serial number displayed?

   YES—Go to step 4.

   NO—Go to step 2.

2. Remove the navigation unit (see page 23-255).

3. Check the serial number on the label on the underside of the navigation unit.

   Is the serial number confirmed on the underside of the navigation unit?

   YES—Go to step 4.

   NO—Replace the navigation unit (see page 23-255). ■

(cont'd)

Symptom Troubleshooting (cont'd)

4. Using the serial number, look up the navigation security code in the Interactive Network. (click: Service, Vehicle Information, Anti-Theft code Inquiry, and then select Navigation from the "product" dropdown box). Enter the serial number.

   Is a 4-digit code displayed on the screen?

   YES—Go to step 5.

   NO—Call the Warranty Department to obtain the code (the tlephone number is in the PDI service bulletin). Then go to step 5.

5. Check that the obtained code works to bypass the code screen in the navigation system.

   Does the code work?

   YES—The system is OK at this time. Return the vehicle to the customer and give them the anti-theft code. ■

   NO—Go to step 6.

6. Try entering four zeros (0000) as the code.

   Do the four zeros work to bypass the code screen?

   YES—Replace the control unit, and enter "Security code is 0000" in the problem description field of the core return form. ■

   NO—Replace the control unit, and enter "Won't take security code", in the "problem description field" of the core return form; (as proof, enclose the sticker that contains the Serial number and the Code). ■

Navigation display stays on with ignition switch in LOCK (0)

NOTE:
- Check for aftermarket accessories that may interfere with the navigation system.
- Check the connectors for poor connections or loose terminals.
- Before troubleshooting, make sure you have the anti-theft codes for the audio system and the navigation system.
- After troubleshooting, enter the anti-theft codes for the audio system and the navigation system.
- The vehicle may have been used for a show event. Check for a short jumper harness in-line with the navigation unit connector A. If a jumper harness is present, remove it, and return it to Tech Line.

1. Remove the key from the ignition.

   Does the navigation screen stay on?

   YES—Go to step 2.

   NO—The system is OK at this time. ■

2. Check for battery voltage on navigation unit connector A (8P) terminal No. 2.

   Is there battery voltage?

   YES—Troubleshoot a short to battery voltage on the ACC circuit. ■

   NO—Replace the navigation unit (see page 23-255). ■

Navigation cannot control audio system

Diagnostic Test: System Links

NOTE:
- Check the vehicle battery condition first (see page 22-90).
- Check for and resolve all CAN DTCs before troubleshooting the navigation system.
- Verity that the correct navigation unit is installed for this model. Go into the Diagnostic mode, and use Version (see page 23-186).
- Check the connectors for poor connections or loose terminals.
- Before troubleshooting, make sure you have the anti-theft codes for the audio system and the navigation system.
- After troubleshooting, enter the anti-theft codes for the audio system and the navigation system.
- Make sure that the correct DVD color and version are installed.
- Inspect the DVD for dirt or damage.
- Check any official Honda service website for more service information about the navigation system.

1. Turn the ignition switch to ON (II).

2. Make sure the anti-theft code for the audio system is entered.

3. Go into the Diagnostic mode, and use the use the Self-Diagnosis Mode diagnostic (see page 23-166).

   Is the Radio icon red?

   YES—Do the troubleshooting for the voice guidance cannot be heard (see page 23-230). ■

   NO—Go to step 4.

4. Substitute a known-good navigation unit (see page 23-255), and recheck.

   Can the navigation system control audio/disc functions?

   YES—Replace the navigation unit (see page 23-255). ■

   NO—Do the audio system troubleshooting. ■

Navigation cannot control XM radio

NOTE:
- Check the vehicle battery condition first (see page 22-90).
- Make sure that the correct DVD color and version are installed.
- Check any official Honda service website for more service information about the navigation system.

1. Start the vehicle.

2. Make sure the anti-theft code for the audio system is entered.

3. Go into the Diagnostic mode, and use the System Links diagnosis (see page 23-166).

   Is the XM icon red?

   YES—Do the troubleshooting for the voice guidance cannot be heard (see page 23-230). ■

   NO—Go to step 3.

4. Substitute a known-good navigation unit (see page 23-255).

   Can the navigation control XM radio functions?

   YES—Replace the navigation unit (see page 23-255). ■

   NO—Replace the AcuraLink control unit (XM receiver) (see page 23-111) or XM receiver (see page 23-112). ■

Symptom Troubleshooting (cont'd)

Navigation frequently asks for anti-theft code and/or needs GPS initialization

NOTE:
- This is often caused by a loss of battery power, a low or poor battery condition, or a poor ground.
- Make sure that the correct DVD color and version are installed.
- Check any official Honda service website for more service information about the navigation system.

1. Turn the ignition switch to LOCK (0).
2. Disconnect navigation unit connector A (8P), and check for loose terminals.

   Are any of the terminals loose?

   YES—Repair or replace the loose terminal(s). ■

   NO—Go to step 3.
3. Reconnect navigation unit connector A (8P).
4. Turn the ignition switch to ON (II).
5. Measure the voltage between body ground and navigation unit connector A (8P) terminals No. 1 and No. 2 individually.

NAVIGATION UNIT CONNECTOR A (8P)

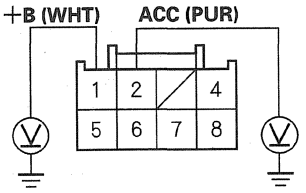

Wire side of female terminals

Is there battery voltage?

YES—Go to step 6.

NO—If the +B wire does not have voltage, repair open in the wire between the driver's under-dash fuse/relay box and the navigation unit. If the ACC wire does not have voltage, repair open in the wire between the driver's under-dash fuse/relay box and the navigation unit. ■

6. Measure the voltage between navigation unit connector A (8P) terminal No. 4 and body ground.

NAVIGATION UNIT CONNECTOR A (8P)

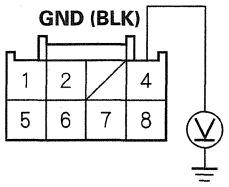

Wire side of female terminals

Is there less than 0.1 V?

YES—Replace the navigation unit (see page 23-255).

NO—Repair an open or high resistance in the wire between the navigation unit and body ground (G602) (see page 22-42). ■

Traffic or Weather information is not shown on map screen

If your client complains that traffic and/or weather is not displayed, it could be because a traffic and/or weather setting is not correct.

NOTE:
- Check the vehicle battery condition first (see page 22-90).
- Always check for and resolve all CAN DTCs before troubleshooting the navigation system.
- Check the connectors for poor connections or loose terminals.
- Before troubleshooting, get the navigation system anti-theft codes.
- After troubleshooting, enter the navigation system anti-theft codes.
- Verify that correct navigation unit is installed for this model. Go into the diagnostic mode, and use version (see page 23-186).
- Always make sure that the correct DVD color and version are installed.
- Check any official Honda service website for more service information about the navigation system.
- A marginal battery or poorly performing charging system may cause the XM/HIP unit to malfunction.
- The vehicle is equipped with an auto start feature that keeps the starter motor engaged, even when you release the ignition switch. Due to the ignition design, if a client releases the ignition switch before the engine starts, the XM/HIP unit may receive unusually low voltage. This may cause the XM/HIP to malfunction. When starting the vehicle, hold the ignition switch in the START (III) position until the motor starts.

(cont'd)

Symptom Troubleshooting (cont'd)

1. Test the battery condition (see page 22-90).

   Is the battery in good condition?

   YES—Go to step 2.

   NO—Troubleshoot the battery and/or charging system, and recheck. ■

2. Park the vehicle outside where you have a clear view of the southern sky.

3. Turn the ignition switch to ON (II).

4. Check to see if the vehicle is receiving an XM signal. Select Setup, then select more, then select Traffic/ Weather.

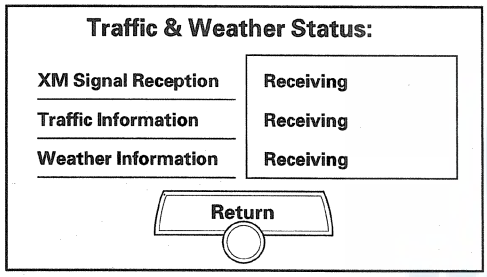

5. Make sure that you are receiving the applicable signal that you are troubleshooting. For example, if the client complains that they do not receive real-time traffic and account is Expired, you need to contact XM to confirm the account is active. Refer to the table for the message status and action.

   NOTE: This check confirms the customer account, but does not check the XM signal reception. The XM radio continues to tune XM channels 000, 001, 174, or 247, even if the XM account is expired.

Message	Description	Action
Receiving	The system is receiving XM signal, Traffic information and/or weather information.	The system is OK. Go to step 7.
No signal	The signal is not being received.	Make sure you are outside with a clear view of the sky. Go into diagnosis mode check to check system links.
Expired	The account is expired.	Go to step 6.
Loading	The system is searching for the signal or receiving an update.	Give the system a few minutes to finish loading. If the loading message does not go away, go into diagnosis mode check to check system links.
Check antenna	There is a problem with the XM antenna.	Check the XM antenna for damage or loose connections, then recheck using the system links in the diagnosis mode check.

6. Make sure the client's XM NavTraffic and/or XM weather information account status is active. These accounts are separate from the regular XM radio subscription, and they have separate fees. For the 2010 Acura RL, real-time traffic and weather are free for the first 3 months.

   To check the XM NavTraffic and weather account status:
   - Call XM® Satellite Radio at 800-852-9696.
   - Make sure you have:
     – The VIN
     – The XM radio ID (shown on channel 000)
   - From the automated phone menu, select tech support.
   - Tell the agent that you are working on an Acura vehicle, and ask them to check the XM NavTraffic and XM weather account(s) status. Have the agent confirm that the XM NavTraffic and XM weather subscription(s) applies to the vehicle VIN you are working on.

   NOTE: A client may own more than one vehicle capable of displaying real-time traffic and XM weather.

   Is the XM NavTraffic and XM weather account(s) status active?

   YES—Go to step 7.

   NO—If the free trial period is expired, return the vehicle to the client, and inform them how to renew their XM NavTraffic and XM weather subscription(s) by calling XM radio at 800-852-9696. ■

   If the free trial period has not expired, call XM radio at 800-852-9696 and reactivate the account for the remainder of the free trial period, then request rapid refresh. To do a rapid refresh:
   - Park the vehicle outside, in a clear area, with the engine running.
   - Turn the audio system on, and tune to an XM radio channel.
   - Wait 30 minutes.

   If the vehicle now receives real-time traffic information and/or XM weather, return it to the client, otherwise go to step 7.

(cont'd)

Symptom Troubleshooting (cont'd)

7. Make sure the navigation map is set to any scale from 1/20 mile of a mile to 5 miles. If the scale is not set within this range, rotate the interface dial knob, or use the zoom in buttons to adjust the map to proper scale.

   NOTE: XM weather is available on all scales.

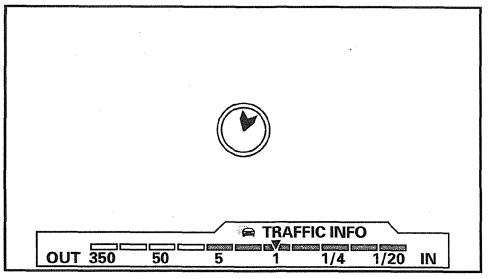

Do you see real-time traffic on the navigation display?

YES—Return the vehicle to the client, and explain the proper settings. ■

NO—Go to step 8.

8. Make sure the real-time traffic settings are correct.

   - Press the map/guide button, then select the map menu by pressing in the selector button.
   - Select Show Icon on Map by turning the interface dial, then pressing in the selector button.
   - Select the Traffic icon (A) from the Icon selection bar at the bottom of the navigation display.
   - Select Icon Options (B) by pushing the selector to the right.
   - From the Select Category for Icon settings menu, select Traffic.
   - Make sure both Traffic Speeds and Traffic Icons are solid blue. If they are not, select Traffic Speeds by pressing in the selector on the Select Traffic Info screen. It should turn solid blue. Turn the interface dial to select Traffic Icons, and press in the selector again. It should turn solid blue. Push the selector to the right (DONE) to complete the process.

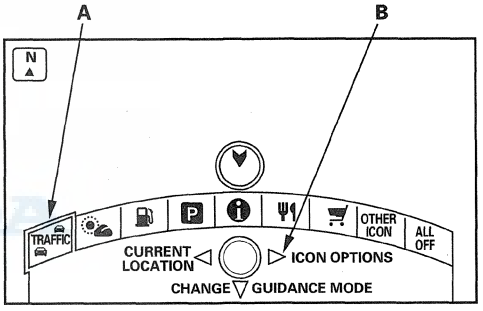

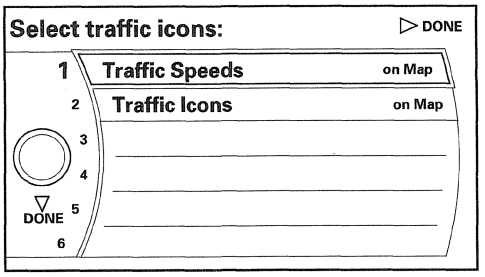

Do you see real-time traffic on the navigation display?

YES—Return the vehicle to the client, and explain the proper settings. ■

NO—Go to step 9.

9. Make sure the XM weather settings are correct.

   - From the Show Icon on Map menu, select the Weather icon (A) from the Icon selection bar at the bottom of the navigation display.
   - Select Icon Options (B) by pushing the selector to the right.
   - From the Select Category for Icon settings menu, select Weather.
   - Make sure both Weather Warning Icons and Weather Icons are solid blue. If they are not, select Weather Warning Icon by pressing in the selector on the Select Weather Info screen. It should turn solid blue. Turn the interface dial to select Weather Icons, and press in the selector again. It should turn solid blue. Push the selector to the right (DONE) to complete the process.

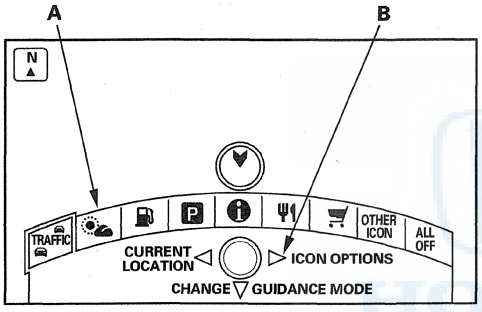

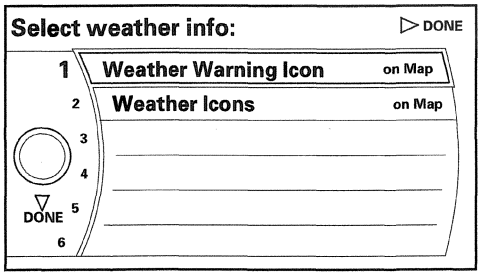

Do you see XM weather on the navigation display?

YES—Return the vehicle to the client, and explain the proper settings. ■

NO—Go to step 10.

10. Do the diagnostic mode checks:

    - Start the vehicle, and enter the navigation diagnostic mode by pressing and holding the Menu, Map/Guide, and Cancel buttons.
    - Go into the Diagnostic Menu, and select the Self-Diagnosis Mode in the Select Diagnosis items menu, and verify that all the icons are green. If any links/icons are red, refer to the applicable service manual section for repair information, then go to step 11.
    - Return to the Detail Information & Setting menu and select XM (HIP), then select XM (HIP) System Link, and verify that the links/icons are green. If any links/icons are red, refer to the applicable service manual section for repair information, then go to step 11.

11. Do a VIN status inquiry, and check for any software updates for the AcuraLink control unit.

    Are there any applicable product updates or service bulletins?

    YES—Do the applicable product updates and service bulletins, then retest the vehicle. If real-time traffic does not work, go to step 12.

    NO—Go to step 12.

(cont'd)

Symptom Troubleshooting (cont'd)

12. Reset the AcuraLink control unit.

    NOTE: Make sure you have the anti-theft codes for the navigation system.

    To reset the AcuraLink control unit:
    - Disconnect AcuraLink control unit (XM receiver) connector B (2P) from the AcuraLink control unit.
    - Enter the navigation diagnostic mode, select XM (HIP), then select XM (HIP) ECU.
    - Select Data Reset to do the reset.
    - When the reset is done, press cancel twice to return to the XM (HIP) diagnostic menu.
    - Select Return to fully exit the diagnostic mode.
    - Turn the ignition switch to LOCK (0).
    - Reconnect AcuraLink control unit (XM receiver) connector B (2P).
    - Start the vehicle.
    - Enter the anti-theft codes for the navigation system.
    - Let the navigation system boot, then select one of the traffic scales (5, 1, 1/4, 1/20 miles).
    - Park the vehicle outside with a clear view of the southern sky, and verify you are receiving an XM radio signal (see step 4).

    Do you see real-time traffic on the navigation display?

    YES—Call Acura Client Services to ask for an AcuraLink reactivation. Return the vehicle to the client. ■

    NO—Go to step 13.

13. Substitute a known-good AcuraLink control unit (XM receiver) (see page 23-111), and retest the vehicle.

    Park the vehicle outside with a clear view of the southern sky, and verify you are receiving an XM radio signal (see step 4).

    Do you see real-time traffic on the navigation display?

    YES—Replace the original AcuraLink control unit (XM receiver). Register the new AcuraLink control unit with XM radio and Acura Client Services. Return the vehicle to the client. ■

    NO—Substitute a known-good navigation unit (see page 23-255). If the problem goes away, replace the original navigation unit. ■

Trip computer-no distance

Diagnostic Test: Car Status

NOTE:
- Check the vehicle battery condition first (see page 22-90).
- Always check for and resolve all CAN DTCs before troubleshooting the navigation system.
- Check the connectors for poor connections or loose terminals.
- Before troubleshooting, make sure you have the anti-theft codes for the audio system and the navigation system.
- After troubleshooting, enter the anti-theft codes for the audio system and the navigation system.
- Verify that the correct navigation unit is installed for this model. Go into the Diagnostic mode, and use Version (see page 23-186).
- Always make sure that the correct DVD color and version are installed.
- Check any official Honda service website for more service information about the navigation system.

1. Go into the Self-Diagnosis Mode and use Car Status diagnostic (see page 23-185) to check for a vehicle speed pulse (VSP).

   Is there a VSP when the vehicle is moving?

   YES—Check the CAN bus wires for an open or short to ground between navigation unit connector B (32P) terminals No. 8 and No. 24 and PCM connector E (31P) terminals No. 15 and No. 26. If OK, replace the navigation unit.■

   NO—Check the VSP wire for an open or short to ground between navigation unit connector A (8P) terminal No. 6 and PCM connector E (31P) terminal No. 11.■

Trip computer-no fuel information

Diagnostic Test: Self-Diagnosis Mode

NOTE:
- Check the vehicle battery condition first (see page 22-90).
- Always check for and resolve all CAN DTCs before troubleshooting the navigation system.
- Check the connectors for poor connections or loose terminals.
- The navigation only displays the trip information. The calculations are done in the gauge control module.
- Before troubleshooting, make sure you have the anti-theft codes for the audio system and the navigation system.
- After troubleshooting, enter the navigation system anti-theft codes.
- Verify that the correct navigation unit is installed for this model. Go into the diagnostic mode, and use Version (see page 23-186).
- Make sure that the correct DVD color and version are installed.
- Check any official Honda service website for more service information about the navigation system.

Do the System Links check (see page 23-166) to check the communication line between the PCM (FI-ECU) and the navigation unit.

1. Start the engine.

2. Go into the Self-Diagnosis Mode, and use Trip Information diagnostic under System Links (see page 23-166).

   Are the values greater than zero?

   YES—The system is OK.■

   NO—Check for B or F-CAN DTCs, then troubleshoot them.■

Symptom Troubleshooting (cont'd)

Rearview camera image does not come on or work properly

NOTE:
- Check the vehicle battery condition first (see page 22-90).
- Always check for and resolve all CAN DTCs before troubleshooting the navigation system.
- Check the connectors for poor connections or loose terminals.
- Before troubleshooting, make sure you have the anti-theft codes for the audio system and the navigation system.
- After troubleshooting, enter the navigation system anti-theft codes.
- Verify that the correct navigation unit is installed for this model. Go into the diagnostic mode and use Version (see page 23-186).
- Make sure that the correct DVD color and version are installed.
- Check any official Honda service website for more service information about the navigation system.

1. Turn the ignition switch ON (II), and start the engine.

   Does the Navigation screen come on and show an image when the vehicle is started?

   YES—Go to step 2.

   NO—Go to troubleshooting for No picture is displayed (see page 23-223). ■

2. Go into the Self-Diagnosis Mode, and use the System Links test (see page 23-166) to check the connection between the navigation unit and the rearview camera.

   Is the R-camera link red on the screen?

   YES—Go to step 3.

   NO—Go to step 12.

3. Confirm the system connection.

   Is the R-camera link red on the screen?

   YES—Go to step 4.

   NO—Go to carstatus, and check the BACK-Reverse indication status (see page 23-186). ■

4. Check the connections between navigation unit connector E (7P) and the rearview camera 6P connector.

   Are the connections OK?

   YES—Go to step 5.

   NO—Repair the poor connection, and reconnect the connectors. ■

5. Disconnect navigation unit connector E (7P) and the rearview camera 6P connector.

6. Check for continuity between navigation unit connector E (7P) and the rearview camera 6P connector according to the table.

Navigation unit connector	Rearview camera	Wire color
E1	1	WHT
E2	2	BLK
E4	3	RED
E5	4	YEL
E6	5	GRY
E7	6	GRN

NAVIGATION UNIT CONNECTOR E (7P)

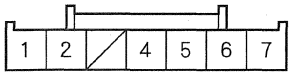

Wire side of female terminals

REARVIEW CAMERA 6P CONNECTOR

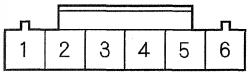

Wire side of female terminals

Is there continuity?

YES—Go to step 7.

NO—Repair an open in the wire between navigation unit connector E (7P) and the rearview camera 6P connector or replace the affected shielded harness. ■

(cont'd)

Symptom Troubleshooting (cont'd)

7. Check for continuity between navigation unit connector E (7P) and body ground according to the table. Then check for continuity between navigation unit connector E (7P) terminal No. 6 and rearview camera 6P connector terminal No. 5 and the same terminals.

Navigation unit connector	Wire color
E1	WHT
E2	BLK
E4	RED
E5	YEL
E7	GRN

NAVIGATION UNIT CONNECTOR E (7P)

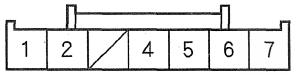

Wire side of female terminals

Is there continuity?

YES—There is a short in the wire between the navigation unit and the rearview camera. Replace the affected shielded harness. ■

NO—Go to step 8.

8. Turn the ignition switch ON (II), and measure the voltage between navigation unit connector E (7P) and body ground according to the table.

Navigation unit connector	Wire color
E1	WHT
E2	BLK
E4	RED
E5	YEL
E7	GRN
E6	GRY

NAVIGATION UNIT CONNECTOR E (7P)

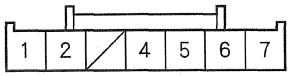

Wire side of female terminals

Is there 0.1 V or more?

YES—There is a short in the wire between the navigation unit and the rearview camera. Replace the affected shielded harness. ■

NO—Go to step 9.

9. Turn the ignition switch to LOCK (0).

10. Reconnect the rearview camera 6P connector.

11. Substitute and connect a known-good navigation unit, and check the rearview camera image in reverse.

    Is the rearview image OK?

    YES—Replace the original navigation unit (see page 23-255). ■

    NO—Replace the rearview camera (see page 23-258). ■

12. Select the Return in the upper right corner of the screen to return the main menu, then go to Version (see page 23-186).

13. Check the model code that is displayed.

    Is the correct navigation unit model code displayed for this vehicle?

    YES—Go to step 14.

    NO—The wrong navigation unit in installed. Replace the navigation unit with the correct part. ■

14. Remove the DVD disc from the navigation unit, and check the label color of the DVD disc.

    Is the DVD disc label white (or possibly gray for Canada)?

    YES—Reinsert the DVD disc, and go to step 5.

    NO—Replace the DVD disc with the correct color. See the Obtaining a Navigation DVD in the General Troubleshooting Information (see page 23-122). ■

Navigation does not call using the HFL

NOTE:
- Always have the client demonstrate their concern. Compare the operation of this feature in a known-good vehicle.
- Review the navigation system manual for the proper operation of this feature. If the navigation database does not have a phone number listed for the POI you are trying to call (for example, a public park), the navigation system cannot place a call through the HFL.
- You must have the client's phone, the phone must be on the list of the HFL approved phones and configured correctly.
- For a current list of HFL approved phones, go to www.acura.com/handsfreelink or call the HFL support desk at 888-528-7876

1. Connect the HDS to the DLC (see page 23-296).

2. Clear the DTCs with the HDS.

3. Turn the ignition switch to LOCK (0), and then back ON (II).

4. Check for B-CAN DTCs in the data list.

   Are there any DTCs in the B-CAN systems?

   YES—Troubleshoot and repair all CAN related DTCs, and retest. ■

   NO—Make sure the cell phone is paired to the HFL (see page 23-298) and working properly. Without AcuraLink, go to step 5.

5. Turn the ignition switch to LOCK (0).

(cont'd)

Symptom Troubleshooting (cont'd)

6. Disconnect navigation unit connector D (5P) and the HandsFreeLink control unit 28P connector.

7. Check for continuity between navigation unit connector D (5P) and the HandsFreeLink control unit 28P connector according to the table.

Navigation unit connector	HandsFreeLink control unit connector	Wire color
D1	7	GRN
D2	6	BLK
D3	20	RED
D4	21	WHT
D5	8	GRY

NAVIGATION UNIT CONNECTOR D (5P)

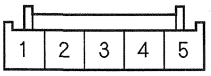

Wire side of female terminals

HANDSFREELINK CONTROL UNIT 28P CONNECTOR

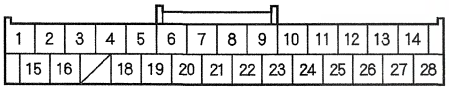

Wire side of female terminals

Is there continuity?

YES—Go to step 8.

NO—There is an open in the wire(s) between the HandFreeLink control unit and the navigation unit. Replace the affected shielded harness. ■

8. Check for continuity between navigation unit connector D (5P) and body ground according to the table.

Navigation unit connector	Wire color
D1	GRN
D2	BLK
D3	RED
D4	WHT

Is there continuity?

YES—There is a short to body ground in the wire(s) between the HandsFreeLink control unit and the navigation unit. Replace the affected shielded harness. ■

NO—Go to step 9.

9. Check for continuity between the terminals of navigation unit connector D (5P) according to the table.

From terminal	To terminals
D1	D2, D3, D4, D5
D2	D3, D4, D5
D3	D4, D5
D4	D5

Is there continuity between any of the terminals?

YES—There is a short in the wire(s) between the HandsFreeLink control unit and the navigation unit. Replace the affected shielded harness. ■

NO—Substitute a known-good HandsFreeLink control unit, then reconnect all of the connectors and recheck. If the symptom/indication goes away, replace the original HandFreeLink control unit. If the symptom/indication is still present, replace the navigation unit. ■

Navigation unit will not eject or accept the navigation DVD

1. Check the No. 5 (7.5 A) fuse in the driver's under-dash fuse/relay box and No. 32 (10 A) fuse in the driver's under-dash fuse/relay box.

   Are the fuses OK?

   YES—Go to step 2.

   NO—Replace the blown fuse(s), and recheck. ■

2. Turn the ignition switch to ON (II).

3. Eject the DVD from the navigation unit (see page 23-254).

   Does the navigation DVD eject?

   YES—Go to step 4.

   NO—Go to step 5.

4. Reinsert the navigation DVD into the navigation unit.

   Does the navigation unit accept the navigation DVD?

   YES—No problems at this time, the system is normal. Inspect for loose or poor connections at terminals No. 1, No. 2, and No. 4 of navigation unit connector A (8P). ■

   NO—Replace the navigation unit (see page 23-255). ■

5. Measure the voltage between navigation unit connector A (8P) terminal No. 4 and body ground.

NAVIGATION UNIT CONNECTOR A (8P)

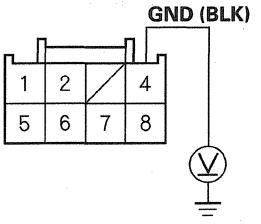

Wire side of female terminals

Is there less than 0.2 V?

YES—Go to step 6.

NO—Repair an open or high resistance in the BLK wire between navigation unit connector A (8P) and body ground (G602) (see page 22-42). ■

6. Measure the voltage between body ground and navigation unit connector A (8P) terminal No. 1 and No. 2 individually.

NAVIGATION UNIT CONNECTOR A (8P)

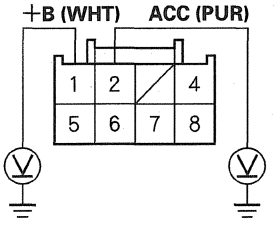

Wire side of female terminals

Is there battery voltage?

YES—Replace the navigation unit. ■

NO—Repair an open in the WHT wire between navigation unit connector A (8P) terminal No. 1 and the No. 5 (7.5 A) fuse in the driver's under-dash fuse/relay box, or between navigation unit connector A (8P) terminal No. 2 and the No. 32 (10 A) fuse in the driver's under-dash fuse/relay box. ■

Forced Starting of Display

Special Tools Required
SCS Service Connector 07PAZ-0010100

1. Remove the trunk trim (see page 20-83).
2. Turn the ignition switch to LOCK (0).
3. Connect the SCS service connector (A) to the navigation service connector (B) located behind the navigation unit.

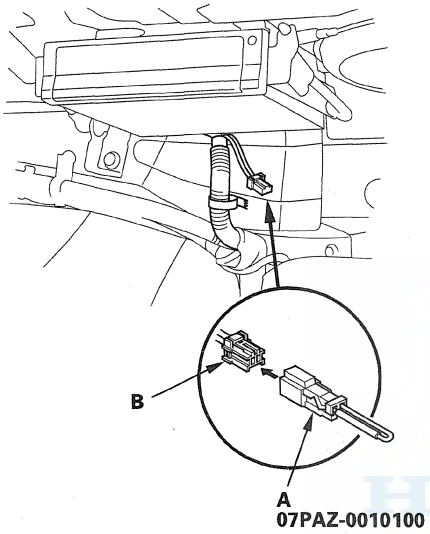

4. Turn the ignition switch to ON (II).
5. Check that the diagnosis menu for the picture diagnosis starts up, and then changes to the system link menu.

   NOTE: If the display fails to display the system link screen, refer to no picture is displayed (see page 23-223).

DVD-ROM/CD-ROM Replacement

NOTE:
- Do not replace the DVD-ROM to give a client a preview of an updated DVD.
- Check any official Honda service website for more service information about the navigation system and software updates.

1. Turn the ignition switch to ON (II).
2. Push the open button (A) of the navigation unit located on the left side of the trunk.

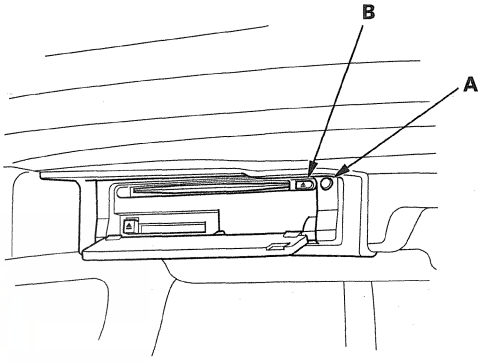

3. Press the EJECT button (B).
4. Remove the DVD-ROM/CD-ROM.
5. Insert the new DVD-ROM/CD-ROM with the white label facing up.
6. Close the front cover. Do not turn the ignition switch to LOCK (0); watch the navigation screen until the data is downloaded to the navigation unit.
7. Do the Map Matching (see page 23-122).

   NOTE: After servicing, the front cover and PC card slot door must be closed.

Navigation Unit Removal/Installation

NOTE:
- Before you replace the navigation unit, back-up the clients data using system diagnostic mode save users memory under the functional set-up (see page 23-178).
- If the navigation unit is replaced or disconnected, a Map Matching must be done (see page 23-122).

1. Turn the ignition switch to ON (II).
2. Eject the DVD from the original navigation unit (see page 23-254). To avoid scratching or damaging the DVD, temporarily place the DVD in a jewel case.
3. Turn the ignition switch to LOCK (0).
4. Remove the trunk trim lining (see page 20-83).
5. Remove the four screws (A) from the navigation unit brackets (B).

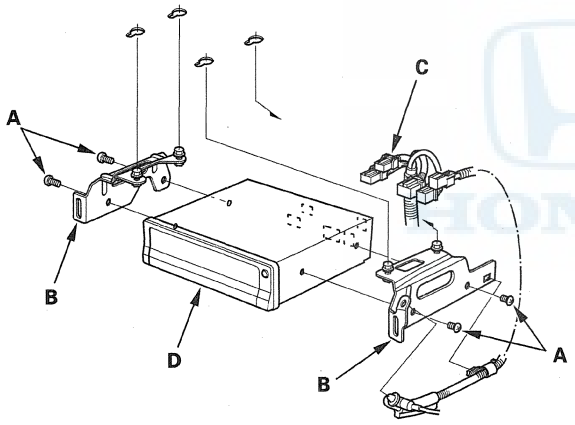

6. Disconnect the navigation unit connectors (C).
7. Remove the navigation unit (D).
8. Install in the reverse order of removal.
9. Turn the ignition switch to ON (II), then reinstall the client's original DVD, verifying that the DVD is free of scratches or smudges.
10. Check any official Honda service website for more service information about patches for the navigation system. Apply any prescribed patches to the new navigation unit.

    NOTE: Simply transferring the DVD from the original navigation unit to the new navigation unit does not assure the correct software for the vehicle will be loaded into the new navigation unit. Doing the DVD transfer without doing software patches may cause the new navigation unit to appear to be malfunctioning.
11. Enter the new navigation anti-theft code.
12. Park the vehicle outside, and do the GPS initialization (see page 23-121).
13. Give the new navigation anti-theft code to the client.

Navigation Display Unit Removal/ Installation

1. Remove the front center speaker (see page 23-110).
2. Remove the three screws (A, B), then remove the display unit (C). The forward screw (B) can be seen through the windshield or with a mirror.

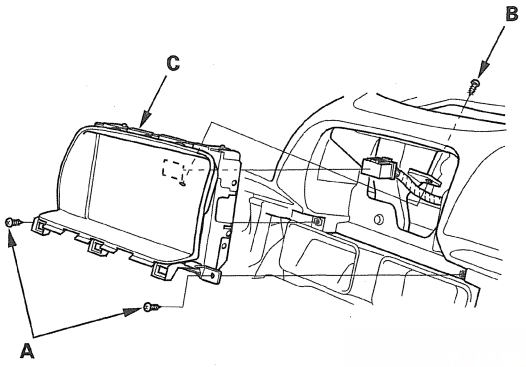

3. Install the unit in the reverse order of removal. Be careful not to drop the forward screw behind the dashboard.

Interface Dial Removal/Installation

1. Remove the audio unit (see page 23-106).
2. Remove the harness cover (A).

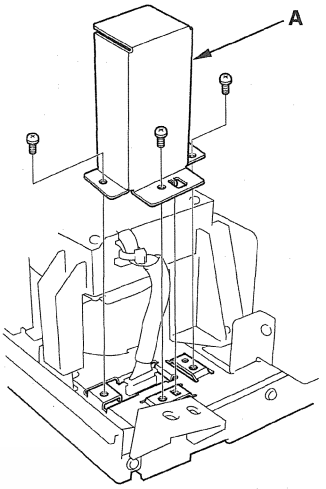

3. Remove the screws (A) and the jog dial (B) from the interface dial (C).

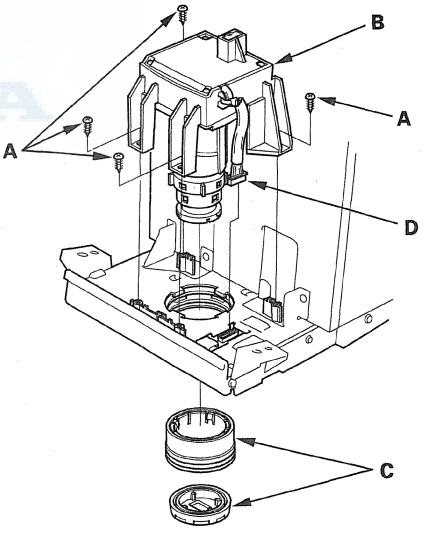

4. Disconnect the connector (D), then remove the interface dial.
5. Install the dial in reverse order of removal.

GPS Antenna Removal/Installation

1. Remove the rear shelf (see page 20-80).
2. Remove the trunk trim (see page 20-83).
3. Disconnect the GPS antenna connector (A), and remove the bolt (B).

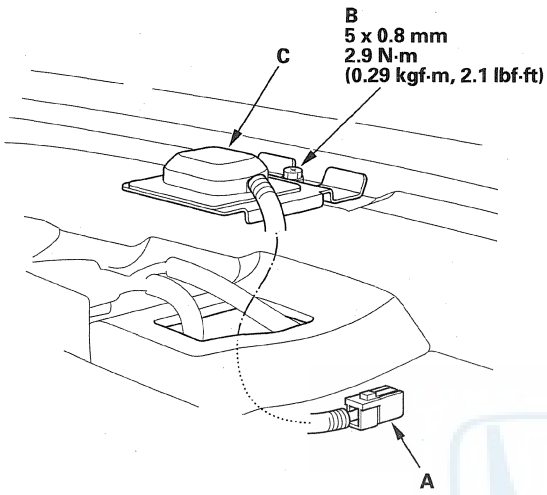

4. Remove the GPS antenna (C).
5. Install the antenna in the reverse order of removal.

Voice Control Switch Test

1. Remove the driver's airbag assembly (see page 24-197).
2. Remove the 20P connector from the cable reel.

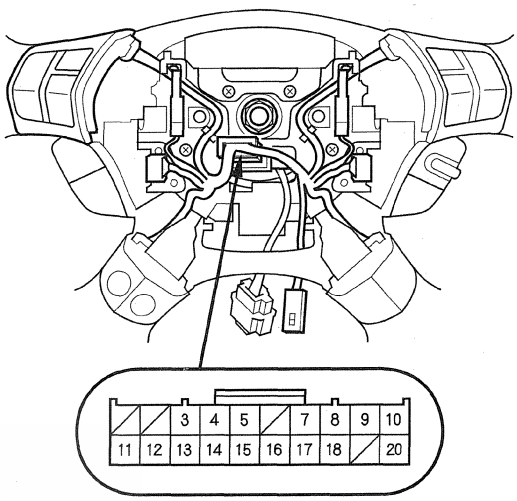

Wire side of female terminals

3. Measure the resistance between the No. 18 and No. 20 terminals in each switch position according to the table.

Position	Resistance
No button pressed	About 10 kΩ
Talk button pressed	About 2.2 kΩ
Back button pressed	About 652 Ω

4. If the resistance is not as specified, replace the remote switch (see page 17-23), and replace the voice control switch (see page 17-23).

(cont'd)

Voice Control Switch Test (cont'd)

5. Use a diode tester between the terminals in each switch position according to the table.

Terminal	8		9
	○	⊣◁	○

6. If the diode test is not as specified, replace the remote switch (see page 17-23), and replace the voice control switch (see page 17-23).

Rearview Camera Removal/ Installation

1. Remove the trunk lid trim (see page 20-85).
2. Disconnect the 6P connector (A) from the rearview camera (B).

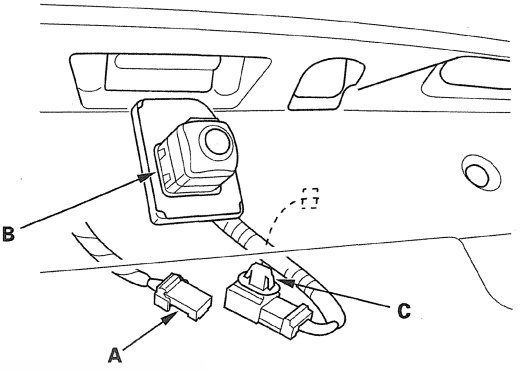

3. Remove the clip (C).
4. Pull out the rearview camera assembly.
5. Install the rearview camera in the reverse order of removal.

Component Location Index

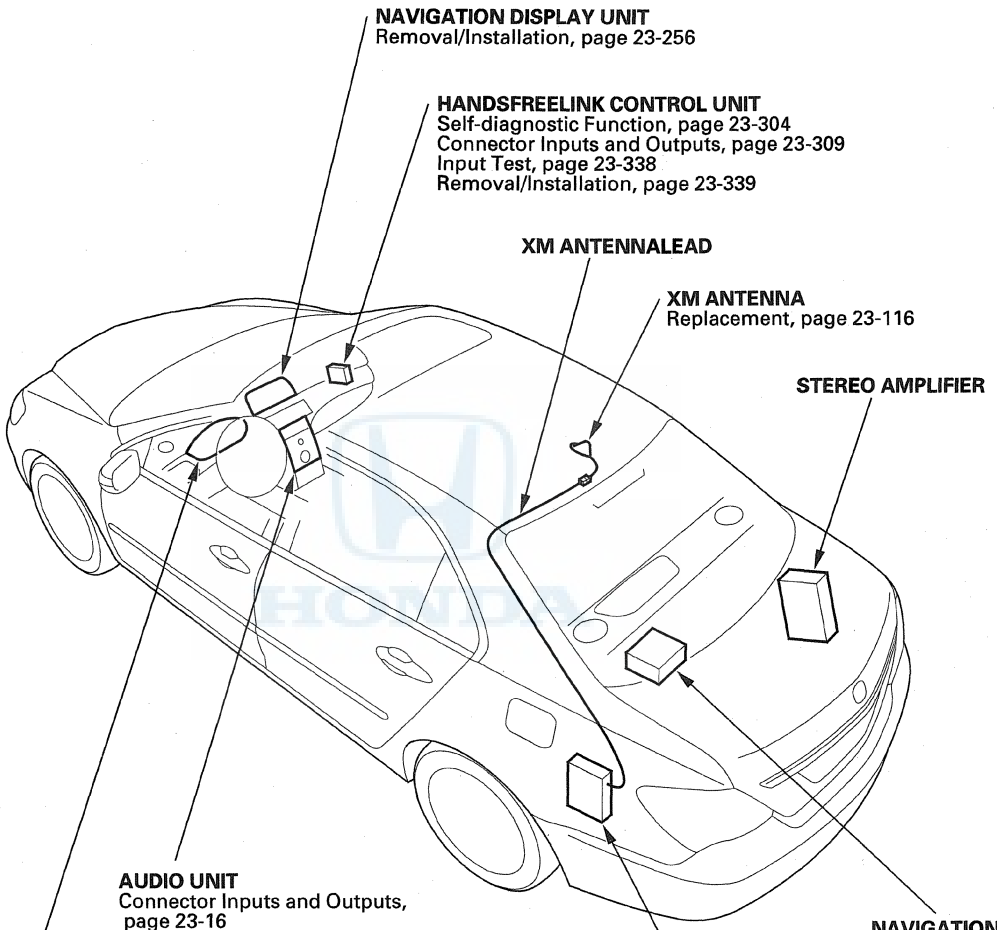

General Troubleshooting Information

How to Check for DTCs with the HDS

1. Make sure the ignition switch is in LOCK (0).
2. Connect the HDS to the data link connector (DLC) (A) located under the driver's side of the dashboard.

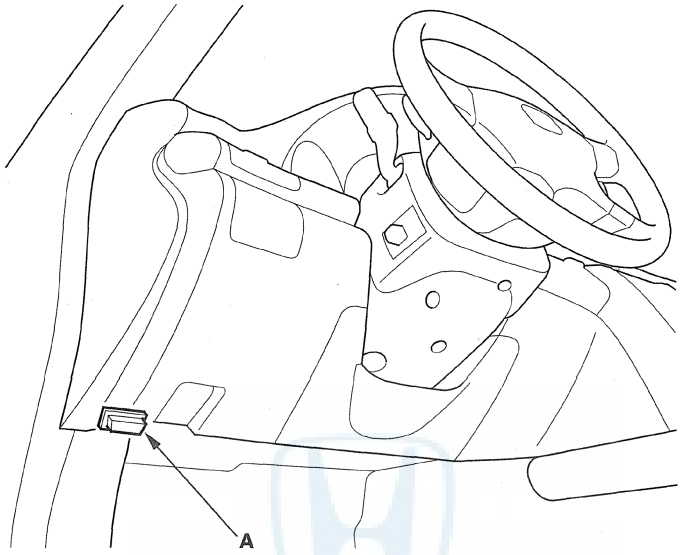

3. Turn the ignition switch to ON (II).
4. Make sure the HDS communicates with the vehicle and the AcuraLink control unit (XM receiver). If it doesn't, troubleshoot the DLC circuit (see page 11-211).
5. Select XM/HIP in the BODY ELECTRICAL menu.
6. Select DTCs in the XM/HIP menu.
7. Check for DTCs. If any DTCs are indicated, write down the DTCs, then go to the indicated DTC troubleshooting. If no DTCs are indicated, refer to symptom troubleshooting.

   NOTE:
   - After troubleshooting, clear the DTCs with the HDS.
   - For specific operations, refer to the user's manual that came with the HDS.

DTC Troubleshooting Index

AcuraLink control unit

DTC	Description	DTC type	Page
B2200	Communication bus line error	Loss of communication	(see page 22-148)
B2204	B-CAN communication line error	Loss of communication	(see page 23-283)
B2206	SRS unit lost communication with AcuraLink control unit (XM receiver)	Loss of communication	(see page 23-284)
B2211	F-CAN communication line error with PCM	Loss of communication	(see page 23-285)
B2212	Gauge control module lost F-CAN communication with AcuraLink control unit (XM receiver)	Loss of communication	(see page 23-286)
B2240	XM antenna error	Internal error	(see page 23-287)
B2248	HIP power supply abnormal (more than 16 V)	Battery voltage	(see page 23-287)
B2249	HIP power supply abnormal (ress than 9 V)	Battery voltage	(see page 23-288)

Symptom Troubleshooting Index

Symptom	Diagnostic procedure	Also check for
AcuraLink services do not work	Symptom Troubleshooting (see page 23-288)	• Blown fuse No. 21 (10 A) and No. 32 (10 A) in the driver's under-dash fuse/ relay box • Poor ground at G602
AcuraLink services do not work after replacing the AcuraLink control unit (XM receiver)		• Call Acura Client Services and request an activation • Call XM client care and register the replacement AcuraLink control unit (XM receiver)
AcuraLink messages cannot be heard or are weak	Symptom Troubleshooting (see page 23-290)	
Traffic or Weather information is not shown on map screen	Navigation System Symptom Troubleshooting (see page 23-241)	• AcuraLink (XM) • Navigation unit • Harness
AcuraLink messages cannot be deleted	How to Delete Stored AcuraLink massege (see page 23-263)	

System Description

The AcuraLink uses the client's portable telephone or XM radio to transmit and receive information about the vehicle. It is controlled via serial data communication by using a remote display and control unit in the vehicle. For Acura specific XM data, the remote display and control unit is the navigation unit. In addition, the AcuraLink system has a Text-To-Speech engine, and also has the capability to initiate voice or data calls with the HandsFreeLink control unit.

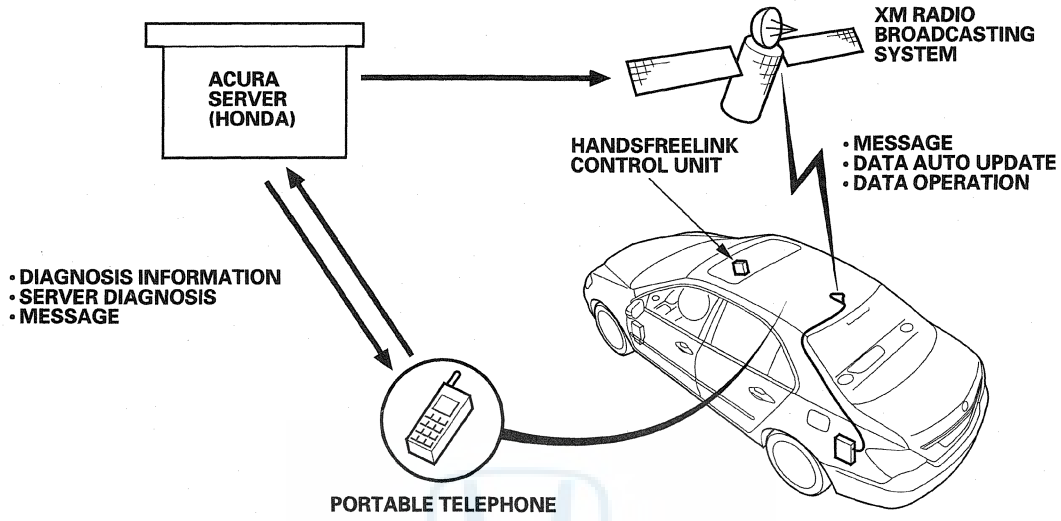

Service Application

- Malfunction indicator lamp (MIL) explanation (from server message and vehicle message)
- Service information message
- Recall information
- Quick tips
- Place to provide feedback/view cautions that were not available when vehicle was initially sold
- Correction of address and full name that is registered
- Real time traffic information
- Weather information
- Maintenance information message
- Feature guide (90 days)

(cont'd)

System Description (cont'd)

How to Delete Stored AcuraLink Messages

The AcuraLink Satellite Communication System displays, and stores these types of messages on the navigation system display screen:
- Feature Guide info
- System malfunction info
- Driver warnings
- DTCs
- Quick tips

NOTE:
- To delete any stored AcuraLink messages, follow these procedures. The first procedure is for clients. It allows them to delete certain types of messages. The second procedure is for service techs. It lets you delete all stored messages.
- The diagnostic menu includes a DATA RESET function. Select this only at TQI, and when the vehicle changes ownership. It deletes all AcuraLink messages, log data, and AcuraLink registration. If you select DATA RESET during the 45-day activation period, the AcuraLink Feature Guide repeats the first message. AcuraLink messages related to a repair should be deleted after that repair is done. If you don't delete these messages, they stay in your client's AcuraLink message log.

Message Delete Procedure

Client

1. Turn the ignition switch to ON (II).
2. Select OK on the disclaimer screen.
3. Press the INFO button to bring up the Information screen.
4. Use the interface dial to select No. 1 All Messages.
5. Select the item number you want to delete, then select Delete. (If you don't see Delete on the display screen, you can't remove this message.)
6. Select Yes to confirm your choice.

Message Delete Procedure

Service Tech Only

1. Turn the ignition switch to ON (II).
2. Select OK on the disclaimer screen.
3. Press MAP/GUIDE, MENU, and CANCEL buttons for 3 seconds, or connect the SCS service connector to the navigation service connector located in the trunk (see page 23-254) and the self-diagnosis mode begins. Then using the interface dial, select the Self-Diagnosis Mode or Detail Information & Setting from the Select Diagnosis Items.

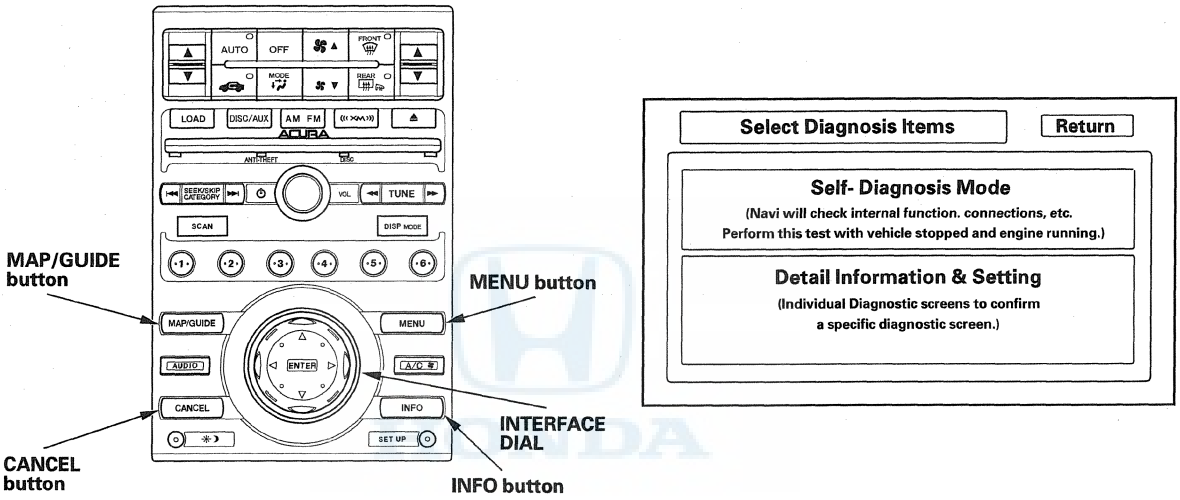

4. Using the interface dial, select XM (HIP) from the Select Diagnosis Items or Detail information & Setting. Press the interface dial. Select XM (HIP) ECU.

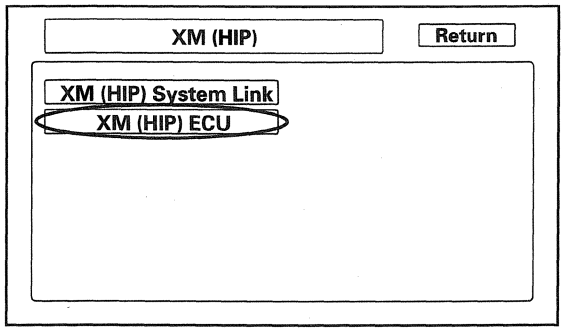

5. Select Diagnostic Info.
6. Select the item you want to delete. After the message and date come up, select Delete.
7. Select Yes to confirm your choice.
8. Repeat step 6 and 7 for each message you want to delete.

(cont'd)

System Description (cont'd)

AcuraLink Control Unit (XM Receiver) Connector for Inputs and Outputs

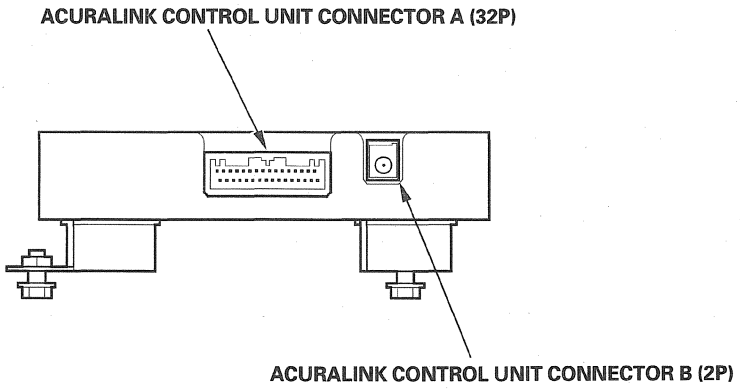

AcuraLink Control Unit (XM Receiver) Connector A (32P)

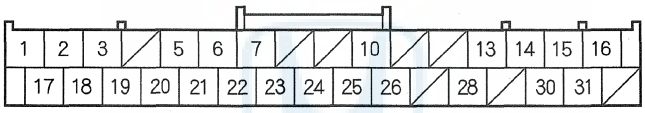

Wire side of female terminals

Cavity	Wire Color	Terminal Name	Connect to
A1	WHT	+B	No. 5 (7.5 A) fuse in the driver's under-hood fuse/relay box
A2	YEL	IG1	No. 21 (10 A) fuse in the drivers' under-dash fuse/relay box
A3	PUR	ACC	No. 32 (10 A) fuse in the drivers' under-dash fuse/relay box
A5	ORN	DIAG LINE	SRS unit
A6	RED	F-CAN L	F-CAN communication bus line
A7	WHT	F-CAN H	F-CAN communication bus line
A10	LT GRN	B-CAN	B-CAN communication bus line
A13	GRN	AUDIO R+	Audio unit, HandsFreeLink control unit, USB adapter unit
A14	BLK	AUDIO R−	Audio unit, HandsFreeLink control unit, USB adapter unit
A15	WHT	AUDIO L+	Audio unit, HandsFreeLink control unit, USB adapter unit
A16	RED	AUDIO L−	Audio unit, HandsFreeLink control unit, USB adapter unit

Cavity	Wire Color	Terminal Name	Connect to
A17	GRN	NAVI COMM1	Navigation unit
A18	BLK	NAVI COMM2	Navigation unit
A19	WHT	NAVI COMM3	Navigation unit
A20	RED	NAVI COMM4	Navigation unit
A21	GRY*	NAVI COMM SH	Shield for terminals No. 17, No. 18, No. 19, and No. 20
A22	GRN	HFL COMM3	Navigation unit, HandsFreeLink control unit
A23	BLK	HFL COMM4	Navigation unit, HandsFreeLink control unit
A24	RED	HFL COMM1	Navigation unit, HandsFreeLink control unit
A25	WHT	HFL COMM2	Navigation unit, HandsFreeLink control unit
A26	GRY*	HFL COMM SH	Shield for terminals No. 22, No. 23, No. 24, and No. 25
A28	BLK	GND	Body ground to G602
A30	GRN	GA-NET BUS+	Navigation unit, HandsFreeLink control unit, navigation display unit, USB adapter unit
A31	RED	GA-NET BUS−	Navigation unit, HandsFreeLink control unit, navigation display unit, USB adapter unit

*: The shielded wires have a heat-shrink tube insulating the outside of the wire. The color of the insulating tube, typically black or dark gray, may not match the color of the wire listed on the schematic.

AcuraLink Control Unit (XM Receiver) Connector B (2P)

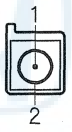

Terminal side of female terminals

Cavity	Wire Color	Terminal Name	Connect to
B1	———	INPUT	XM antenna
B2	———	GND	Shield for terminal No. 1

Circuit Diagram

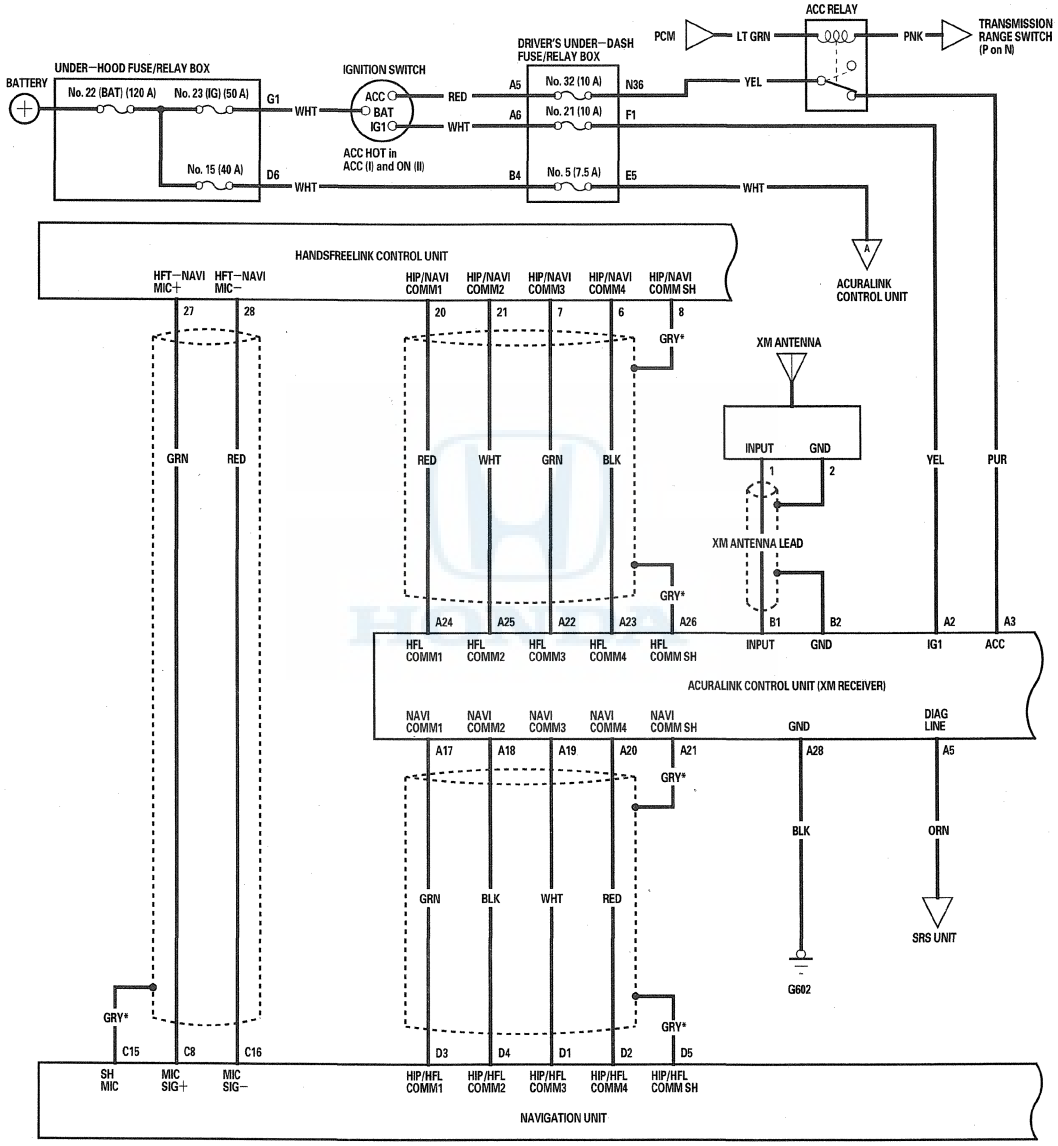

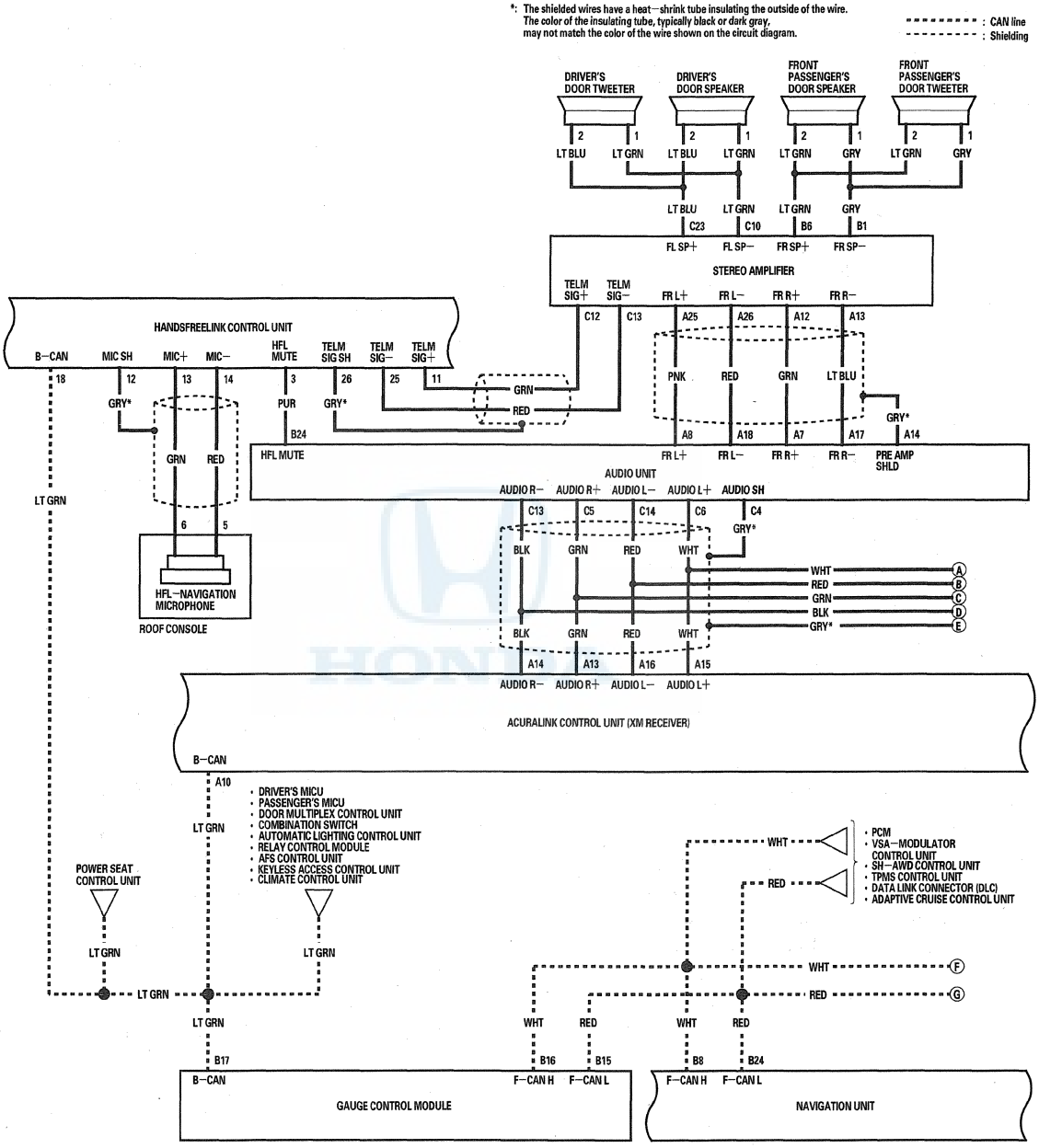
*: The shielded wires have a heat—shrink tube insulating the outside of the wire. The color of the insulating tube, typically black or dark gray, may not match the color of the wire shown on the circuit diagram.
: CAN line
: Shielding
DRIVER'S DOOR TWEETER
DRIVER'S DOOR SPEAKER
FRONT PASSENGER'S DOOR SPEAKER
FRONT PASSENGER'S DOOR TWEETER
LT BLU
LT GRN
GRY
STEREO AMPLIFIER
FL SP+
FL SP−
FR SP+
FR SP−
TELM SIG+
TELM SIG−
FR L+
FR L−
FR R+
FR R−
HANDSFREELINK CONTROL UNIT
B−CAN
MIC SH
MIC+
MIC−
HFL MUTE
TELM SIG SH
TELM SIG−
TELM SIG+
PNK
RED
GRN
LT BLU
GRY*
PUR
HFL MUTE
PRE AMP SHLD
AUDIO UNIT
AUDIO R−
AUDIO R+
AUDIO L−
AUDIO L+
AUDIO SH
BLK
WHT
HFL−NAVIGATION MICROPHONE
ROOF CONSOLE
ACURALINK CONTROL UNIT (XM RECEIVER)
• DRIVER'S MICU
• PASSENGER'S MICU
• DOOR MULTIPLEX CONTROL UNIT
• COMBINATION SWITCH
• AUTOMATIC LIGHTING CONTROL UNIT
• RELAY CONTROL MODULE
• AFS CONTROL UNIT
• KEYLESS ACCESS CONTROL UNIT
• CLIMATE CONTROL UNIT
POWER SEAT CONTROL UNIT
• PCM
• VSA—MODULATOR CONTROL UNIT
• SH—AWD CONTROL UNIT
• TPMS CONTROL UNIT
• DATA LINK CONNECTOR (DLC)
• ADAPTIVE CRUISE CONTROL UNIT
F—CAN H
F—CAN L
GAUGE CONTROL MODULE
NAVIGATION UNIT

(cont'd)

Circuit Diagram (cont'd)

*: The shielded wires have a heat—shrink tube insulating the outside of the wire. The color of the insulating tube, typically black or dark gray, may not match the color of the wire shown on the circuit diagram.
: CAN line
: Other communication line
: Shielding

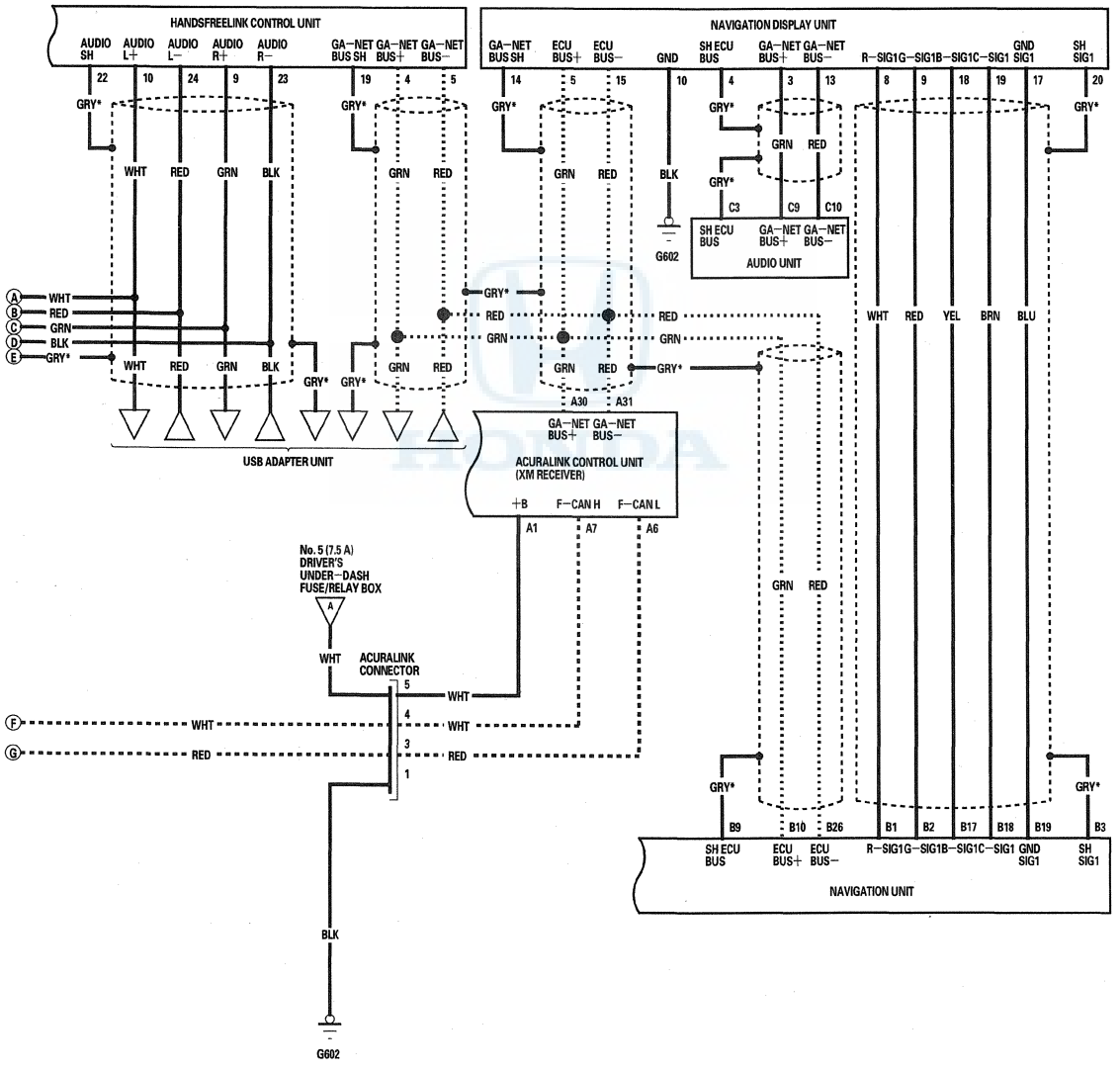

Self-diagnostic Function

Note: Only select DATA RESET from the XM (HIP) ECU screen when instructed. Selecting DATA RESET will clear the AcuraLink registration, and the AcuraLink service will reset to the factory default. If the vehicle was already registered for the AcuraLink service, it will have to be reactivated by calling Acura Client Services before all features are available.

The AcuraLink, built into the XM receiver has a self-diagnostic function. To run the self-diagnostic function, do the following:

How to Enter the Self-diagnostic Function

1. Turn the ignition switch to ON (II).
2. Press the MAP/GUIDE, CANCEL, and MENU buttons at the same time for 3 seconds more, and the self-diagnosis mode begins.

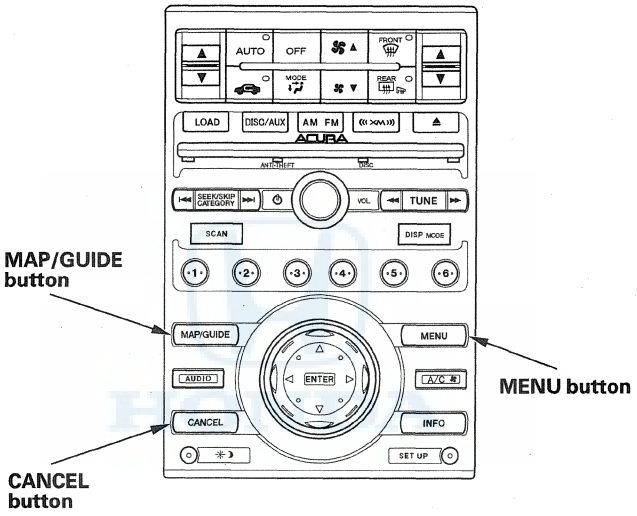

3. Using interface dial, select the Detail Information & Setting from the Select Diagnosis Items menu. Press the interface dial.

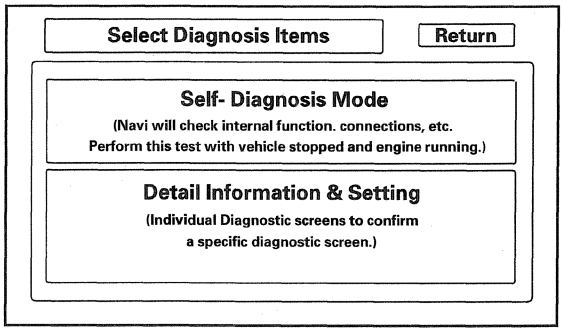

(cont'd)

Self-diagnostic Function (cont'd)

4. Using the interface dial, select the XM (HIP) from the Detail Information & Setting menu. Press the interface dial.

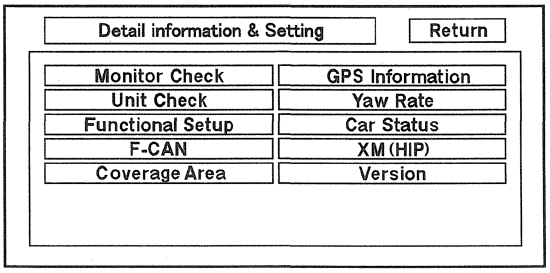

5. Using the interface dial, select the XM (HIP) System Link from the XM (HIP) menu. Press the interface dial. The display indicates XM (HIP) System Link, and does an AcuraLink connection check for each device. If a connection is faulty, the place where it is faulty is indicated with NG (red color).

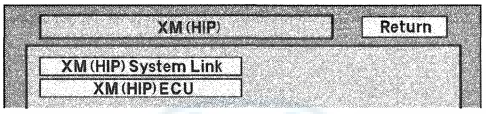

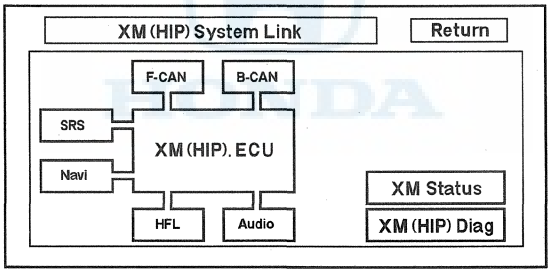

Connection OK: Green color
Connection NG: Red color

6. When a red (NG) is indicated, check the continuity between the AcuraLink control unit (XM receiver) and the device indicated in red.

Device indicated in red	Test condition	Test: Desired result	Possible cause if result is not obtained
F-CAN	AcuraLink control unit (XM receiver) connector A (32P) and SH-AWD control unit connector A (26P) disconnected	Check for continuity between AcuraLink control unit (XM receiver) connector A (32P) terminal No. 7 and SH-AWD control unit connector A (26P) terminal No. 11: There should be continuity.	An open in the wire
		Check for continuity between AcuraLink control unit (XM receiver) connector A (32P) terminal No. 6 and SH-AWD control unit connector A (26P) terminal No. 10: There should be continuity.	An open in the wire
	AcuraLink control unit (XM receiver) connector A (32P) and PCM connector A (31P) disconnected	Check for continuity between AcuraLink control unit (XM receiver) connector A (32P) terminal No. 7 and PCM connector A (31P) terminal No. 15: There should be continuity.	An open in the wire
		Check for continuity between AcuraLink control unit (XM receiver) connector A (32P) terminal No. 6 and PCM connector A (31P) terminal No. 26: There should be continuity.	An open in the wire
	AcuraLink control unit (XM receiver) connector A (32P) and gauge control module connector B (28P) disconnected	Check for continuity between AcuraLink control unit (XM receiver) connector A (32P) terminal No. 7 and gauge control module connector B (28P) terminal No. 16: There should be continuity.	An open in the wire
		Check for continuity between AcuraLink control unit (XM receiver) connector A (32P) terminal No. 6 and gauge control module connector B (28P) terminal No. 15: There should be continuity.	An open in the wire
	AcuraLink control unit (XM receiver) connector A (32P) and TPMS control unit connector A (32P) disconnected	Check for continuity between AcuraLink control unit (XM receiver) connector A (32P) terminal No. 7 and TPMS control unit connector A (20P) terminal No. 19: There should be continuity.	An open in the wire
		Check for continuity between AcuraLink control unit (XM receiver) connector A (32P) terminal No. 6 and TPMS control unit connector A (20P) terminal No. 10: There should be continuity.	An open in the wire
	AcuraLink control unit (XM receiver) connector A (32P) and navigation unit connector B (32P) disconnected	Check for continuity between AcuraLink control unit (XM receiver) connector A (32P) terminal No. 7 and navigation unit connector B (32P) terminal No. 8: There should be continuity.	An open in the wire
		Check for continuity between AcuraLink control unit (XM receiver) connector A (32P) terminal No. 6 and navigation unit connector B (32P) terminal No. 24: There should be continuity.	An open in the wire
	AcuraLink control unit (XM receiver) connector A (32P) and VSA control unit connector A (47P) disconnected	Check for continuity between AcuraLink control unit (XM receiver) connector A (32P) terminal No. 7 and VSA control unit connector A (47P) terminal No. 14: There should be continuity.	An open in the wire
		Check for continuity between AcuraLink control unit (XM receiver) connector A (32P) terminal No. 6 and VSA control unit connector A (47P) terminal No. 30: There should be continuity.	An open in the wire

(cont'd)

Self-diagnostic Function (cont'd)

Device indicated in red	Test condition	Test: Desired result	Possible cause if result is not obtained
F-CAN	AcuraLink control unit (XM receiver) connector A (32P), SH-AWD control unit connector A (26P), PCM connector A (31P), gauge control module connector B (28P), TPMS control unit connector A (20P), VSA control unit connector A (47P), and navigation unit connector B (32P) disconnected	Check for continuity between body ground and AcuraLink control unit (XM receiver) connector A (32P) terminals No. 7 and No. 6 individually: There should be no continuity.	A short in the wire
		Check for continuity between AcuraLink control unit (XM receiver) connector A (32P) terminals No. 1 and No. 7: There should be no continuity.	A short in the wire
		Check for continuity between AcuraLink control unit (XM receiver) connector A (20P) terminals No. 1 and No. 6: There should be no continuity.	A short in the wire
	AcuraLink control unit (XM receiver) connector A (32P), SH-AWD control unit connector A (26P), PCM connector A (31P), gauge control module connector B (28P), TPMS control unit connector A (20P) and navigation unit connector B (32P) disconnected	Check for continuity between body ground and AcuraLink control unit (XM receiver) connector A (32P) terminals No. 7 and No. 6 individually: There should be no continuity.	A short in the AcuraLink control unit (XM receiver)
	AcuraLink control unit (XM receiver) connector A (32P), PCM connector A (31P), gauge control module connector B (28P), TPMS control unit connector A (20P) and navigation unit connector B (32P) disconnected	Check for continuity between body ground and AcuraLink control unit (XM receiver) connector A (32P) terminals No. 7 and No. 6 individually: There should be no continuity.	A short in the SH-AWD control unit
	AcuraLink control unit (XM receiver) connector A (32P), SH-AWD control unit connector A (26P), gauge control module connector B (28P), TPMS control unit connector A (20P) and navigation unit connector B (32P) disconnected	Check for continuity between body ground and AcuraLink control unit (XM receiver) connector A (32P) terminals No. 7 and No. 6 individually: There should be no continuity.	A short in the PCM
	AcuraLink control unit (XM receiver) connector A (32P), SH-AWD control unit connector A (26P), PCM connector A (31P), TPMS control unit connector A (20P) and navigation unit connector B (32P) disconnected	Check for continuity between body ground and AcuraLink control unit (XM receiver) connector A (32P) terminals No. 7 and No. 6 individually: There should be no continuity.	A short in the gauge control module
	AcuraLink control unit (XM receiver) connector A (32P), SH-AWD control unit connector A (26P), PCM connector A (31P), gauge control module connector B (28P) and navigation unit connector B (32P) disconnected	Check for continuity between body ground and AcuraLink control unit (XM receiver) connector A (32P) terminals No. 7 and No. 6 individually: There should be no continuity.	A short in the TPMS control unit
	AcuraLink control unit (XM receiver) connector A (32P), SH-AWD control unit connector A (26P), PCM connector A (31P), gauge control module connector B (28P) and TPMS control unit connector B (20P) disconnected	Check for continuity between body ground and AcuraLink control unit (XM receiver) connector A (32P) terminals No. 7 and No. 6 individually: There should be no continuity.	A short in the navigation unit
	AcuraLink control unit (XM receiver) connector A (32P), SH-AWD control unit connector A (26P), PCM connector A (31P), gauge control module connector B (28P), TPMS control unit connector A (20P), adaptive cruise control (ACC) unit connector (20P) and navigation unit connector B (32P) disconnected	Check for continuity between body ground and AcuraLink control unit (XM receiver) connector A (32P) terminals No. 7 and No. 6 individually: There should be not continuity.	A short in the VSA control unit
	AcuraLink control unit (XM receiver) connector A (32P), SH-AWD control unit connector A (26P), PCM connector A (31P), gauge control module connector B (28P) and TPMS control unit connector A (20P) disconnected	Check for continuity between body ground and AcuraLink control unit (XM receiver) connector A (32P) terminals No. 7 and No. 6 individually: There should be no continuity.	A short in the navigation unit

Device indicated in red	Test condition	Test: Desired result	Possible cause if result is not obtained
B-CAN	AcuraLink control unit (XM receiver) connector A (32P) and driver's under-dash fuse/relay box connector J (21P) disconnected	Check for continuity between AcuraLink control unit (XM receiver) connector A (32P) terminal No. 10 and driver's under-dash fuse/relay box connector J (21P) terminal No. 7: There should be continuity.	An open in the wire
	AcuraLink control unit (XM receiver) connector A (32P) and gauge control module connector B (28P) disconnected	Check for continuity between AcuraLink control unit (XM receiver) connector A (32P) terminal No. 10 and gauge control module connector B (28P) terminal No. 17: There should be continuity.	An open in the wire
	AcuraLink control unit (XM receiver) connector A (32P) and active headlights control unit 40P connector disconnected	Check for continuity between AcuraLink control unit (XM receiver) connector A (32P) terminal No. 10 and active headlights control unit 40P connector terminal No. 15: There should be continuity.	An open in the wire
	AcuraLink control unit (XM receiver) connector A (32P) and combination switch control unit 8P connector disconnected	Check for continuity between AcuraLink control unit (XM receiver) connector A (32P) terminal No. 10 and combination switch control unit 8P connector terminal No. 4: There should be continuity.	An open in the wire
	AcuraLink control unit (XM receiver) connector A (32P) and driver's MPCS unit connector A (40P) disconnected	Check for continuity between AcuraLink control unit (XM receiver) connector A (32P) terminal No. 10 and driver's MPCS unit connector A (40P) terminal No. 28: There should be continuity.	An open in the wire
	AcuraLink control unit (XM receiver) connector A (32P) and smart ECU connector A (31P) disconnected	Check for continuity between AcuraLink control unit (XM receiver) connector A (32P) terminal No. 10 and smart ECU connector A (31P) terminal No. 11: There should be continuity.	An open in the wire
	AcuraLink control unit (XM receiver) connector A (32P) and power tilt/telescopic steering control unit connector A (16P) disconnected	Check for continuity between AcuraLink control unit (XM receiver) connector A (32P) terminal No. 10 and power tilt/telescopic steering control unit connector A (16P) terminal No. 11: There should be continuity.	An open in the wire
	AcuraLink control unit (XM receiver) connector A (32P) and power seat control unit connector A (40P) disconnected	Check for continuity between AcuraLink control unit (XM receiver) connector A (32P) terminal No. 10 and power seat control unit connector A (40P) terminal No. 40: There should be continuity.	An open in the wire
	AcuraLink control unit (XM receiver) connector A (32P) and HandsFreeLink control unit 28P connector disconnected	Check for continuity between AcuraLink control unit (XM receiver) connector A (32P) terminal No. 10 and HandsFreeLink control unit 28P connector terminal No. 18: There should be continuity.	An open in the wire
	AcuraLink control unit (XM receiver) connector A (32P) and climate control unit 40P connector disconnected	Check for continuity between AcuraLink control unit (XM receiver) connector A (32P) terminal No. 10 and climate control unit 40P connector terminal No. 24: There should be continuity.	An open in the wire
	AcuraLink control unit (XM receiver) connector A (32P), driver's under-dash fuse/relay box connector J (21P), gauge control module connector B (28P), active headlights control unit 40P connector, combination switch control unit 8P connector, driver's MPCS unit connector A (40P), keyless access control unit connector A (31P), power tilt/telescopic steering control unit connector A (16P), power seat control unit connector A (40P), HandsFreeLink control unit 28P connector, and climate control unit 40P connector disconnected	Check for continuity between AcuraLink control unit (XM receiver) connector A (32P) terminal No. 10 and body ground: There should be no continuity.	A short in the wire
		Check for continuity between AcuraLink control unit (XM receiver) connector A (32P) terminal No. 10 and AcuraLink control unit (XM receiver) unit connector A (32P) terminal No. 1: There should be no continuity.	A short in the wire

(cont'd)

Self-diagnostic Function (cont'd)

Device indicated in red	Test condition	Test: Desired result	Possible cause if result is not obtained
B-CAN	Driver's under-dash fuse/relay box connector J (21P), gauge control module connector B (28P), active headlights control unit 40P connector, combination switch control unit 8P connector, driver's MPCS unit connector A (40P), smart ECU connector A (31P), power tilt/ telescopic steering control unit connector A (16P), power seat control unit connector A (40P), HandsFreeLink control unit 28P connector, and climate control unit 40P connector disconnected	Check for continuity between AcuraLink control unit (XM receiver) connector A (32P) terminal No. 10 and body ground: There should be no continuity.	A short in the AcuraLink control unit (XM receiver)
	AcuraLink control unit (XM receiver) connector A (32P), gauge control module connector B (28P), active headlights control unit 40P connector, combination switch control unit 8P connector, driver's MPCS unit connector A (40P), keyless access control unit connector A (31P), power tilt/ telescopic steering control unit connector A (16P), power seat control unit connector A (40P), HandsFreeLink control unit 28P connector, and climate control unit 40P connector disconnected	Check for continuity between AcuraLink control unit (XM receiver) connector A (32P) terminal No. 10 and body ground: There should be no continuity.	A short in the under-dash fuse/relay box
	AcuraLink control unit (XM receiver) connector A (32P), driver's under-dash fuse/relay box connector J (21P), active headlights control unit 40P connector, combination switch control unit 8P connector, driver's MPCS unit connector A (40P), keyless access control unit connector A (31P), power tilt/ telescopic steering control unit connector A (16P), power seat control unit connector A (40P), HandsFreeLink control unit 28P connector, and climate control unit 40P connector disconnected	Check for continuity between AcuraLink control unit (XM receiver) connector A (32P) terminal No. 10 and body ground: There should be no continuity.	A short in the gauge control module

Device indicated in red	Test condition	Test: Desired result	Possible cause if result is not obtained
B-CAN	AcuraLink control unit (XM receiver) connector A (32P), under-hood fuse/ relay box connector J (10P), gauge control module connector B (28P), combination switch control unit 8P connector, driver's MPCS unit connector A (40P), keyless access control unit connector A (31P), power tilt/telescopic steering control unit connector A (16P), power seat control unit connector A (40P), HandsFreeLink control unit 28P connector, and climate control unit 40P connector disconnected	Check for continuity between AcuraLink control unit (XM receiver) connector A (32P) terminal No. 10 and body ground: There should be no continuity.	A short in the active headlights control unit
	AcuraLink control unit (XM receiver) connector A (32P), under-hood fuse/ relay box connector J (10P), gauge control module connector B (28P), active headlights control unit 40P connector, driver's MPCS unit connector A (40P), keyless access control unit connector A (31P), power tilt/telescopic steering control unit connector A (16P), power seat control unit connector A (40P), HandsFreeLink control unit 28P connector, and climate control unit 40P connector disconnected	Check for continuity between AcuraLink control unit (XM receiver) connector A (32P) terminal No. 10 and body ground: There should be no continuity.	A short in the combination switch control unit
	AcuraLink control unit (XM receiver) connector A (32P), under-hood fuse/ relay box connector J (10P), gauge control module connector B (28P), active headlights control unit 40P connector, combination switch control unit 8P connector, keyless access control unit connector A (31P), power tilt/telescopic steering control unit connector A (16P), power seat control unit connector A (40P), HandsFreeLink control unit 28P connector, and climate control unit 40P connector disconnected	Check for continuity between AcuraLink control unit (XM receiver) connector A (32P) terminal No. 10 and body ground: There should be no continuity.	A short in the driver's MPCS unit

(cont'd)

Self-diagnostic Function (cont'd)

Device indicated in red	Test condition	Test: Desired result	Possible cause if result is not obtained
B-CAN	AcuraLink control unit (XM receiver) connector A (32P), under-hood fuse/relay box connector J (10P), gauge control module connector B (28P), active headlights control unit 40P connector, combination switch control unit 8P connector, driver's MPCS unit connector A (40P), power tilt/telescopic steering control unit connector A (16P), power seat control unit connector A (40P), HandsFreeLink control unit 28P connector, and climate control unit 40P connector disconnected	Check for continuity between AcuraLink control unit (XM receiver) connector A (32P) terminal No. 10 and body ground: There should be no continuity.	A short in the keyless access control unit
	AcuraLink control unit (XM receiver) connector A (32P), under-hood fuse/relay box connector J (10P), gauge control module connector B (28P), active headlights control unit 40P connector, combination switch control unit 8P connector, driver's MPCS unit connector A (40P), keyless access control unit connector A (31P), power seat control unit connector A (40P), HandsFreeLink control unit 28P connector, and climate control unit 40P connector disconnected	Check for continuity between AcuraLink control unit (XM receiver) connector A (32P) terminal No. 10 and body ground: There should be no continuity.	A short in the power tilt/telescopic steering control unit
	AcuraLink control unit (XM receiver) connector A (32P), under-hood fuse/relay box connector J (10P), gauge control module connector B (28P), active headlights control unit 40P connector, combination switch control unit 8P connector, driver's MPCS unit connector A (40P), keyless access control unit connector A (31P), power tilt/telescopic steering control unit connector A (16P), HandsFreeLink control unit 28P connector, and climate control unit 40P connector disconnected	Check for continuity between AcuraLink control unit (XM receiver) connector A (32P) terminal No. 10 and body ground: There should be no continuity.	A short in the power seat control unit

Device indicated in red	Test condition	Test: Desired result	Possible cause if result is not obtained
B-CAN	AcuraLink control unit (XM receiver) connector A (32P), under-hood fuse/ relay box connector J (10P), gauge control module connector B (28P), active headlights control unit 40P connector, combination switch control unit 8P connector, driver's MPCS unit connector A (40P), keyless access control unit connector A (31P), power tilt/ telescopic steering control unit connector A (16P), power seat control unit connector A (40P), and climate control unit 40P connector disconnected	Check for continuity between AcuraLink control unit (XM receiver) connector B (16P) terminal No. 10 and body ground: There should be no continuity.	A short in the HandsFreeLink control unit
	AcuraLink control unit (XM receiver) connector A (32P), under-hood fuse/ relay box connector J (10P), gauge control module connector B (28P), active headlights control unit 40P connector, combination switch control unit 8P connector, driver's MPCS unit connector A (40P), keyless access control unit connector A (31P), power tilt/ telescopic steering control unit connector A (16P), power seat control unit connector A (40P), and HandsFreeLink control unit 28P connector disconnected	Check for continuity between AcuraLink control unit (XM receiver) connector B (16P) terminal No. 10 and body ground: There should be no continuity.	A short in the climate control unit

(cont'd)

Self-diagnostic Function (cont'd)

Device indicated in red	Test condition	Test: Desired result	Possible cause if result is not obtained
SRS	AcuraLink control unit (XM receiver) connector A (32P) and SRS unit connector A (28P) disconnected	Check for continuity between AcuraLink control unit (XM receiver) connector A (32P) terminal No. 5 and SRS unit connector A (28P) terminal No. 13: There should be continuity.	An open in the wire
		Check for continuity between AcuraLink control unit (XM receiver) connector A (32P) terminal No. 5 and body ground: There should be no continuity.	A short in the wire
		Check for continuity between AcuraLink control unit (XM receiver) connector A (32P) terminal No. 5 and AcuraLink control unit (XM receiver) connector A (32P) terminal No. 1: There should be no continuity.	A short in the wire
	SRS unit connector A (28P) disconnected	Check for continuity between AcuraLink control unit (XM receiver) connector A (32P) terminal No. 5 and body ground: There should be no continuity.	A short in the AcuraLink control unit (XM receiver)
	AcuraLink control unit (XM receiver) connector A (32P) disconnected	Check for continuity between AcuraLink control unit (XM receiver) connector A (32P) terminal No. 5 and body ground: There should be no continuity.	A short in the SRS unit
Navi	AcuraLink control unit (XM receiver) connector A (32P) and navigation unit connector D (7P) disconnected	Check for continuity between AcuraLink control unit (XM receiver) connector A (32P) terminal No. 17 and navigation unit connector D (7P) terminal No. 3: There should be continuity.	An open in the wire
		Check for continuity between AcuraLink control unit (XM receiver) connector A (32P) terminal No. 18 and navigation unit connector D (7P) terminal No. 4: There should be continuity.	An open in the wire
		Check for continuity between AcuraLink control unit (XM receiver) connector A (32P) terminal No. 19 and navigation unit connector D (7P) terminal No. 1: There should be continuity.	An open in the wire
		Check for continuity between AcuraLink control unit (XM receiver) connector A (32P) terminal No. 20 and navigation unit connector D (7P) terminal No. 2: There should be continuity.	An open in the wire
		Check for continuity between AcuraLink control unit (XM receiver) connector A (32P) terminal No. 17 and body ground: There should be no continuity.	A short in the wire
		Check for continuity between AcuraLink control unit (XM receiver) connector A (32P) terminals No. 1 and No. 17: There should be no continuity.	A short in the wire
		Check for continuity between AcuraLink control unit (XM receiver) connector A (32P) terminal No. 18 and body ground: There should be no continuity.	A short in the wire
		Check for continuity between AcuraLink control unit (XM receiver) connector A (32P) terminals No. 1 and No. 18: There should be no continuity.	A short in the wire
		Check for continuity between AcuraLink control unit (XM receiver) connector A (32P) terminal No. 19 and body ground: There should be no continuity.	A short in the wire
		Check for continuity between AcuraLink control unit (XM receiver) connector A (32P) terminals No. 1 and No. 19: There should be no continuity.	A short in the wire



Device indicated in red	Test condition	Test: Desired result	Possible cause if result is not obtained
Navi	AcuraLink control unit (XM receiver) connector A (32P) and navigation unit connector D (7P) disconnected	Check for continuity between AcuraLink control unit (XM receiver) connector A (32P) terminal No. 20 and body ground: There should be no continuity.	A short in the wire
		Check for continuity between AcuraLink control unit (XM receiver) connector A (32P) terminals No. 1 and No. 20: There should be no continuity.	A short in the wire
	Navigation unit connector D (7P) disconnected	Check for continuity between AcuraLink control unit (XM receiver) connector A (32P) terminal No. 17 and body ground: There should be no continuity.	A short in the AcuraLink control unit (XM receiver)
		Check for continuity between AcuraLink control unit (XM receiver) connector A (32P) terminal No. 18 and body ground: There should be no continuity.	A short in the AcuraLink control unit (XM receiver)
		Check for continuity between AcuraLink control unit (XM receiver) connector A (32P) terminal No. 19 and body ground: There should be no continuity.	A short in the AcuraLink control unit (XM receiver)
		Check for continuity between AcuraLink control unit (XM receiver) connector A (32P) terminal No. 19 and body ground: There should be no continuity.	A short in the AcuraLink control unit (XM receiver)
	AcuraLink control unit (XM receiver) connector A (32P) disconnected	Check for continuity between AcuraLink control unit (XM receiver) connector A (32P) terminal No. 17 and body ground: There should be no continuity.	A short in the navigation unit
		Check for continuity between AcuraLink control unit (XM receiver) connector A (32P) terminal No. 18 and body ground: There should be no continuity.	A short in the navigation unit
		Check for continuity between AcuraLink control unit (XM receiver) connector A (32P) terminal No. 19 and body ground: There should be no continuity.	A short in the navigation unit
		Check for continuity between AcuraLink control unit (XM receiver) connector A (32P) terminal No. 19 and body ground: There should be no continuity.	A short in the navigation unit
HFL	AcuraLink control unit (XM receiver) connector A (32P) and HandsFreeLink control unit 28P connector disconnected	Check for continuity between AcuraLink control unit (XM receiver) connector A (32P) terminal No. 24 and HandsFreeLink control unit 28P connector terminal No. 20: There should be continuity.	An open in the wire
		Check for continuity between AcuraLink control unit (XM receiver) connector A (32P) terminal No. 25 and HandsFreeLink control unit 28P connector terminal No. 21: There should be continuity.	An open in the wire
		Check for continuity between AcuraLink control unit (XM receiver) connector A (32P) terminal No. 22 and HandsFreeLink control unit 28P connector terminal No. 7: There should be continuity.	An open in the wire
		Check for continuity between AcuraLink control unit (XM receiver) connector A (32P) terminal No. 23 and HandsFreeLink control unit 28P connector terminal No. 6: There should be continuity.	An open in the wire
		Check for continuity between AcuraLink control unit (XM receiver) connector A (32P) terminal No. 24 and body ground: There should be no continuity.	A short in the wire

(cont'd)

Self-diagnostic Function (cont'd)

Device indicated in red	Test condition	Test: Desired result	Possible cause if result is not obtained
HFL	AcuraLink control unit (XM receiver) connector A (32P) and HandsFreeLink control unit 28P connector disconnected	Check for continuity between AcuraLink control unit (XM receiver) connector A (32P) terminals No. 1 and No. 24: There should be no continuity.	A short in the wire
		Check for continuity between AcuraLink control unit (XM receiver) connector A (32P) terminal No. 25 and body ground: There should be no continuity.	A short in the wire
		Check for continuity between AcuraLink control unit (XM receiver) connector A (32P) terminals No. 1 and No. 25: There should be no continuity.	A short in the wire
		Check for continuity between AcuraLink control unit (XM receiver) connector A (32P) terminal No. 22 and body ground: There should be no continuity.	A short in the wire
		Check for continuity between AcuraLink control unit (XM receiver) connector A (32P) terminals No. 1 and No. 22: There should be no continuity.	A short in the wire
		Check for continuity between AcuraLink control unit (XM receiver) connector A (32P) terminal No. 23 and body ground: There should be no continuity.	A short in the wire
		Check for continuity between AcuraLink control unit (XM receiver) connector A (32P) terminals No. 1 and No. 23: There should be no continuity.	A short in the wire
	HandsFreeLink control unit 28P connector disconnected	Check for continuity between AcuraLink control unit (XM receiver) connector A (32P) terminal No. 24 and body ground: There should be no continuity.	A short in the AcuraLink control unit (XM receiver)
		Check for continuity between AcuraLink control unit (XM receiver) connector A (32P) terminal No. 25 and body ground: There should be no continuity.	A short in the AcuraLink control unit (XM receiver)
		Check for continuity between AcuraLink control unit (XM receiver) connector A (32P) terminal No. 22 and body ground: There should be no continuity.	A short in the AcuraLink control unit (XM receiver)
		Check for continuity between AcuraLink control unit (XM receiver) connector A (32P) terminal No. 23 and body ground: There should be no continuity.	A short in the AcuraLink control unit (XM receiver)
	AcuraLink control unit (XM receiver) connector A (32P) disconnected	Check for continuity between AcuraLink control unit (XM receiver) connector A (32P) terminal No. 24 and body ground: There should be no continuity.	A short in the HandsFreeLink control unit
		Check for continuity between AcuraLink control unit (XM receiver) connector A (32P) terminal No. 25 and body ground: There should be no continuity.	A short in the HandsFreeLink control unit
		Check for continuity between AcuraLink control unit (XM receiver) connector A (32P) terminal No. 22 and body ground: There should be no continuity.	A short in the HandsFreeLink control unit
		Check for continuity between AcuraLink control unit (XM receiver) connector A (32P) terminal No. 23 and body ground: There should be no continuity.	A short in the HandsFreeLink control unit

NOTE: If the XM antenna connection condition is faulty, XM ANTENNA is indicated on the audio-HVAC subdisplay.

7. If the indication does not go away, confirm DTCs, and refer to the relevant system troubleshooting and input tests.

Cancelling the Self-diagnostic Function

1. Use the interface dial, select the Exit Diag. Press the interface dial to cancel the self-diagnostic function.

DTC Troubleshooting

DTC B2204: B-CAN Communication Line Error

NOTE: If you are troubleshooting multiple DTCs, be sure to follow the instructions in B-CAN system diagnosis test mode A (see page 22-131).

1. Connect the HDS to the DLC (see page 23-260).
2. Turn the ignition switch to ON (II).
3. Check for DTCs with the HDS and DTC log data in the navigation system diagnostic mode (see page 23-166).

   Is DTC B2204 indicated with HDS and on the navigation display?

   YES—Go to step 4.

   NO—Intermittent failure, the B-CAN communication line is OK at this time. Check for poor connections or loose terminals at the AcuraLink control unit (XM receiver). ■
4. Turn the ignition switch to LOCK (0).
5. Disconnect AcuraLink control unit (XM receiver) connector A (32P) and the gauge control module connector B (28P).
6. Check for continuity between AcuraLink control unit (XM receiver) connector A (32P) terminal No. 10 and gauge control module connector B (28P) terminal No. 17.

ACURALINK CONTROL UNIT (XM RECEIVER) CONNECTOR A (32P)
Wire side of female terminals

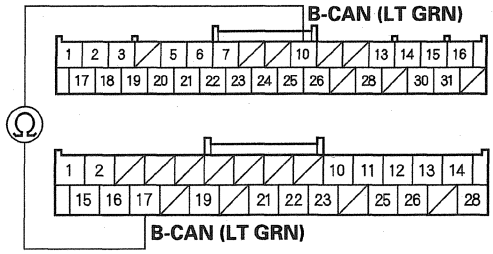

GAUGE CONTROL MODULE CONNECTOR B (28P)
Wire side of female terminals

Is there continuity?

YES—Check for poor connections or loose terminals at the AcuraLink control unit (XM receiver). If all connections are OK, update the AcuraLink control unit if it does not have the latest software, then recheck. If the software is the latest, replace the AcuraLink control unit (see page 23-111). ■

NO—Repair an open in the wire between the AcuraLink control unit (XM receiver) and the gauge control module. ■

DTC Troubleshooting (cont'd)

DTC B2206: SRS Unit Lost Communication with AcuraLink Control Unit (XM receiver)

NOTE: If you are troubleshooting multiple DTCs, be sure to follow the instructions in B-CAN system diagnosis test mode A (see page 22-131).

1. Connect the HDS to the DLC (see page 23-260).
2. Turn the ignition switch to ON (II).
3. Check for DTCs with the HDS and DTC log data in the navigation system diagnostic mode (see page 23-166).

   Is DTC B2206 indicated with HDS and on the navigation display?

   YES—Go to step 4.

   NO—Intermittent failure, the B-CAN communication line is OK at this time. Check for poor connections or loose terminals at the AcuraLink control unit (XM receiver). ■
4. Turn the ignition switch to LOCK (0).
5. Disconnect AcuraLink control unit (XM receiver) connector A (32P) and the SRS unit connector A (28P).
6. Check for continuity between AcuraLink control unit (XM receiver) connector A (32P) terminal No. 5 and SRS unit connector A (28P) terminal No. 13.

ACURALINK CONTROL UNIT (XM RECEIVER) CONNECTOR A (32P)
Wire side of female terminals

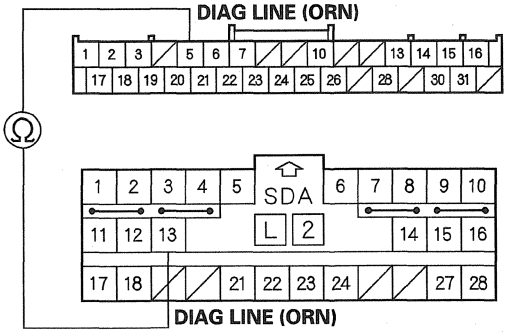

SRS UNIT CONNECTOR A (28P)
Wire side of female terminals

Is there continuity?

YES—Check for poor connections or loose terminals at the AcuraLink control unit (XM receiver). If all connections are OK, update the AcuraLink control unit if it does not have the latest software, then recheck. If the software is the latest, replace the AcuraLink control unit (see page 23-111). ■

NO—Repair an open in the wire between the AcuraLink control unit (XM receiver) and the SRS unit. ■

DTC B2211: F-CAN Communication Line Error with PCM

NOTE: If you are troubleshooting multiple DTCs, be sure to follow the instructions in B-CAN System Diagnosis Test Mode A (see page 22-131).

1. Clear the DTCs with the HDS.
2. Turn the ignition switch to LOCK (0), and then back to ON (II).
3. Start and run the engine for at least 5 seconds, then turn the engine off.
4. Check for DTCs with the HDS.

   Is DTC B2211 indicated?

   YES—Go to step 5.

   NO—Intermittent failure, the F-CAN communication line is OK at this time. Check for DTCs in the PCM with the HDS. If F-CAN DTCs are present, check for loose or poor connections at the gauge control module and the PCM. If the connections are good, check the battery condition and the charging system, then clear all DTCs. ■
5. Check for DTCs in the PCM with the HDS.

   Are any DTCs indicated?

   YES—Go to the PCM indicated DTC's troubleshooting. ■

   NO—Go to step 6.
6. Do the gauge control module input test (see page 22-419).

   Are all inputs OK?

   YES—Go to step 7.

   NO—Repair the faulty input, then recheck the DTCs. ■
7. Substitute a known-good gauge control module.
8. Clear the DTCs with the HDS.
9. Turn the ignition switch to LOCK (0), and then back to ON (II).
10. Start and run the engine for at least 5 seconds, then turn the engine off.
11. Check for DTCs with the HDS.

    Is DTC B2211 indicated?

    YES—Replace the PCM. ■

    NO—The original gauge control module is faulty; replace it. ■

DTC Troubleshooting (cont'd)

DTC B2212: Gauge Control Module Lost F-CAN Communication Line Error with AcuraLink Control Unit (XM receiver)

NOTE: If you are troubleshooting multiple DTCs, be sure to follow the instructions in B-CAN system diagnosis test mode A (see page 22-131).

1. Connect the HDS to the DLC (see page 23-260).
2. Turn the ignition switch to ON (II).
3. Check for DTCs with the HDS and DTC log data in the navigation system diagnostic mode (see page 23-166).

   Is DTC B2212 indicated with HDS and on the navigation display?

   YES—Go to step 4.

   NO—Intermittent failure, the F-CAN communication line is OK at this time. Check for poor connections or loose terminals at the AcuraLink control unit (XM receiver). ■
4. Turn the ignition switch to LOCK (0).
5. Disconnect AcuraLink control unit (XM receiver) connector A (32P) and the gauge control module connector B (28P).
6. Check for continuity between AcuraLink control unit (XM receiver) connector A (32P) and gauge control module connector B (28P) according to the table.

AcuraLink control unit connector	Gauge control module 28P connector	Wire color
A7	B16	WHT
A6	B15	RED

ACURALINK CONTROL UNIT (XM RECEIVER) CONNECTOR A (32P)

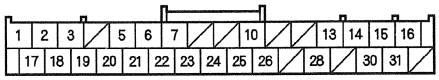

Wire side of female terminals

GAUGE CONTROL MODULE CONNECTOR B (28P)

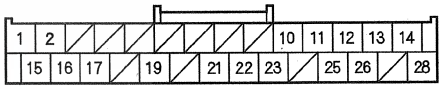

Wire side of female terminals

Is there continuity?

YES—Check for poor connections or loose terminals at the AcuraLink control unit (XM receiver). If all connections are OK, update the AcuraLink control unit if it does not have the latest software, then recheck. If the software is the latest, replace the AcuraLink control unit (see page 23-111). ■

NO—Repair an open in the wire between the AcuraLink control unit (XM receiver) and the gauge control module. ■

DTC B2240: XM Antenna Error

1. Connect the HDS to the DLC (see page 23-260).
2. Clear the DTC with the HDS.
3. Turn the ignition switch to LOCK (0), then turn it to ON (II), and wait 30 seconds or more.
4. Check for DTC with the HDS.

   Is DTC B2240 indicated?

   YES—Go to step 5.

   NO—Intermittent failure, the XM antenna is OK at this time. Check for poor connections or loose terminals at the AcuraLink control unit (XM receiver) and the XM antenna. ■
5. Check the XM antenna lead connection at the AcuraLink control unit (XM receiver) and at the XM antenna.

   Is it connected properly?

   YES—Substitute a known-good XM antenna (see page 23-116), and recheck. If the symptom/indication goes away, replace the original XM antenna (see page 23-116). If the symptom/indication is still present update the AcuraLink control unit if it does not have the latest software, then recheck. If the software is the latest, replace the AcuraLink control unit (see page 23-111). ■

   NO—Reconnect the connector, and recheck the DTC. ■

DTC B2248: HIP Power Supply Abnormal (more than 16 V)

1. Connect the HDS to the DLC (see page 23-260).
2. Clear the DTC with the HDS.
3. Turn the ignition switch to LOCK (0), then turn it to ON (II).
4. Do the alternator and regulator troubleshooting (see page 4-30).

   Is the charging system OK?

   YES—Go to step 5.

   NO—Repair the charging system. ■
5. Check for DTC with the HDS.

   Is DTC B2248 indicated?

   YES—Substitute a known-good AcuraLink control unit and recheck. If the symptom/indication goes away, replace the original AcuraLink control unit (see page 23-111).

   NO—Intermittent failure, HIP is OK at this time. ■

DTC Troubleshooting (cont'd)

DTC B2249: HIP Power Supply Abnormal (less than 9 V)

1. Connect the HDS to the DLC (see page 23-260).
2. Clear the DTCs with the HDS.
3. Turn the ignition switch to LOCK (0), then turn it to ON (II).
4. Check for DTCs with the HDS.

   Is DTC B2249 indicated?

   YES—Go to step 5.

   NO—Intermittent failure, HIP is OK at this time. ■
5. Turn the ignition switch to LOCK (0).
6. Measure the voltage between AcuraLink control unit connector A (32P) terminal No. 1 and No. 28.

ACURALINK CONTROL UNIT (XM RECEIVER) CONNECTOR A (32P)

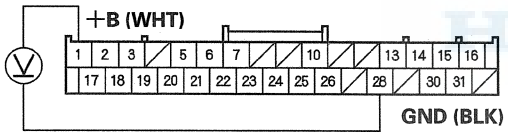

Wire side of female terminals

Is there 9 V or less?

YES—Faulty battery or +B line. ■

NO—Substitute a known-good AcuraLink control unit (see page 23-111), and recheck. If the symptom/indication goes away, replace the original AcuraLink control unit (see page 23-111).

Symptom Troubleshooting

AcuraLink services do not work

NOTE:
- Check the vehicle battery condition first (see page 22-90).
- Check for and resolve all F-CAN and B-CAN DTCs.
- If you can only tune to channel 000, 001, 174, and 247, make sure that the audio unit is set to the channel mode (see owner's manual). If it is set to the channel mode, call XM radio customer support and check the account activation status.

1. Call Acura Client Services and verify the unit status. Request ACS to send an activation signal to the vehicle. Park the vehicle outside, and let the vehicle idle for about an hour.

   Does the AcuraLink service application work?

   YES—The vehicle is OK at this time. ■

   NO—Go to step 2.
2. Check the No. 21 (10 A) fuse and the No. 32 (10 A) fuse in the driver's under-dash fuse/relay box.

   Are the fuses OK?

   YES—Go to step 3.

   NO—Replace the fuse(s), and recheck. ■
3. Turn the ignition switch to ON (II).

4. Measure the voltage between AcuraLink control unit (XM receiver) connector A (32P) terminal No. 3 and body ground.

ACURALINK CONTROL UNIT (XM RECEIVER) CONNECTOR A (32P)

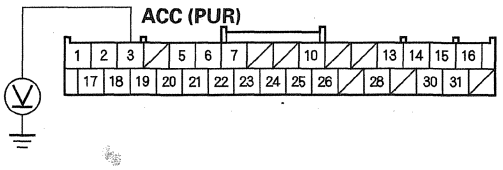

Wire side of female terminals

Is there battery voltage?

YES—Go to step 5.

NO—Repair an open in the wire(s) between the AcuraLink control unit (XM receiver) and the No. 32 (10 A) fuse in the driver's under-dash fuse/relay box. ■

5. Measure the voltage between AcuraLink control unit (XM receiver) connector A (32P) terminal No. 2 and body ground.

ACURALINK CONTROL UNIT (XM RECEIVER) CONNECTOR A (32P)

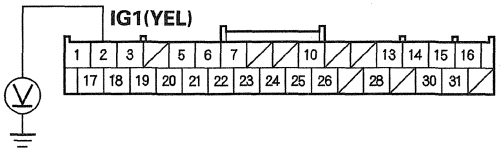

Wire side of female terminals

Is there battery voltage?

YES—Go to step 6.

NO—Repair an open in the wire(s) between the AcuraLink control unit (XM receiver) and the No. 21 (10 A) fuse in the driver's under-dash fuse/relay box. ■

6. Turn the ignition switch to LOCK (0).

7. Measure the voltage between AcuraLink control unit (XM receiver) connector A (32P) terminal No. 28 and body ground.

ACURALINK CONTROL UNIT (XM RECEIVER) CONNECTOR A (32P)

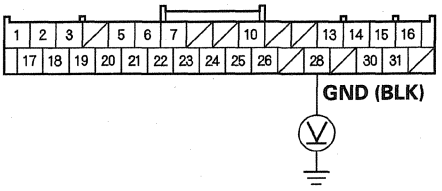

Wire side of female terminals

Is there less than 0.2 V?

YES—Check for loose wires or poor connections at AcuraLink control unit (XM receiver) connector A (32P). If the connections are good, substitute a known-good AcuraLink control unit (XM receiver) (see page 23-111), and recheck. If the symptom/indication goes away, replace the original AcuraLink control unit (XM receiver) (see page 23-111). If the symptom/indication still does not go away, substitute a known-good PCM, rewrite the VIN and recheck. ■

NO—Check for an open or high resistance in the wire between the AcuraLink control unit (XM receiver) and body ground. If the wire is OK, check for poor ground at G602 (see page 22-42). ■

Symptom Troubleshooting (cont'd)

AcuraLink messages cannot be heard or are weak

1. Turn the ignition switch to ON (II).
2. Check that the audio system is operating normally and the speaker sound levels are normal from different audio sources (AM/FM, XM, CD/DVDs, Navigation, etc.).

   Does the audio system work normally and is the audio output from the speaker normal when playing various audio sources?

   YES—Go to step 3.

   NO—Refer to the audio system symptom troubleshooting. ■
3. Check the audio system when AcuraLink messages are played.

   Does the audio system mute when AcuraLink messages are being played?

   YES—If audio system mutes and plays the messages at a normal volume, the system is OK at this time. If the messages are weaker than normal, go to step 4.

   NO—Check for B-CAN codes. Repair any B-CAN codes, then retest. If there are no B-CAN codes, substitute a known-good AcuraLink control unit (XM receiver) (see page 23-111).
4. Turn the ignition switch to LOCK (0).
5. Disconnect AcuraLink control unit (XM receiver) connector A (32P), audio unit connector C (14P), HandsFreeLink control unit 28P connector and USB adapter unit connector A (14P).
6. Check for continuity between AcuraLink control unit (XM receiver) connector A (32P) and audio unit connector C (14P) according to the table.

AcuraLink control unit connector	Audio Unit Connector	Wire color
A13	C5	GRN
A14	C13	BLK
A15	C6	WHT
A16	C14	RED

ACURALINK CONTROL UNIT (XM RECEIVER) CONNECTOR A (32P)

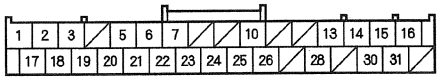

Wire side of female terminals

AUDIO UNIT CONNECTOR C (14P)

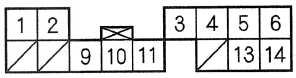

Wire side of female terminals

Is there continuity?

YES—Go to step 7.

NO—There is an open in the wire(s) between the AcuraLink control unit (XM receiver) and the audio unit. Replace the affected shielded harness. ■

7. Check for continuity between AcuraLink control unit (XM receiver) connector A (32P) and body ground according to the table.

	AcuraLink control unit connector	Wire color
AUDIO R+	A13	GRN
AUDIO R−	A14	BLK
AUDIO L+	A15	WHT
AUDIO L−	A16	RED

ACURALINK CONTROL UNIT (XM RECEIVER) CONNECTOR A (32P)

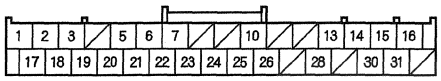

Wire side of female terminals

Is there continuity?

YES—There is a short to body ground in the wire(s) between the AcuraLink control unit (XM receiver) and the audio unit. Replace the affected shielded harness. ■

NO—Go to step 8.

8. Check for continuity between AcuraLink control unit (XM receiver) connector A (32P) and audio unit connector C (14P) according to the table.

From terminal	To terminals
Audio unit connector	AcuraLink control unit connector
C4	A13 (GRN), A14 (BLK), A15 (WHT), A16 (RED)

ACURALINK CONTROL UNIT (XM RECEIVER) CONNECTOR A (32P)

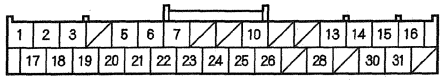

Wire side of female terminals

AUDIO UNIT CONNECTOR C (14P)

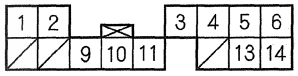

Wire side of female terminals

Is there continuity between any of the terminals?

YES—There is a short in the wire(s) between the AcuraLink control unit (XM receiver) and the audio unit. Replace the affected shielded harness. ■

NO—Go to step 9.

(cont'd)

Symptom Troubleshooting (cont'd)

9. Turn the ignition switch to ON (II).

10. Measure the voltage between AcuraLink control unit (XM receiver) connector A (32P) and body ground according to the table.

	AcuraLink control unit connector	Wire color
AUDIO R+	A13	GRN
AUDIO R−	A14	BLK
AUDIO L+	A15	WHT
AUDIO L−	A16	RED

ACURALINK CONTROL UNIT (XM RECEIVER) CONNECTOR A (32P)

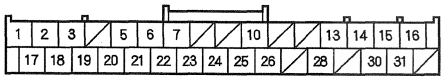

Wire side of female terminals

Is there less than 0.2 V?

YES—Go to step 11.

NO—There is a short to power in the wire(s) between the AcuraLink control unit (XM receiver) and the audio unit. Replace the affected shielded harness. ■

11. Disconnect the stereo amplifier connector C (23P) and the HandsFreeLink control unit 28P connector.

12. Check for continuity between stereo amplifier connector C (23P) and the HandsFreeLink control unit 28P connector according to the table.

Stereo amplifier connector	HandsFreeLink control unit connector	Wire color
C12	No. 11	GRN
C13	No. 25	RED

STEREO AMPLIFIER CONNECTOR C (23P)

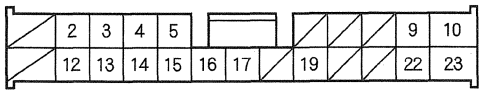

Wire side of female terminals

HANDSFREELINK CONTROL UNIT 28P CONNECTOR

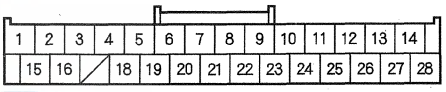

Wire side of female terminals

Is there continuity?

YES—Go to step 13.

NO—There is an open in the wire(s) between the stereo amplifier and the HandsFreeLink control unit. Replace the affected shielded harness. ■

13. Check for continuity between stereo amplifier connector C (23P) and body ground according to the table.

	Stereo amplifier connector	Wire color
TELM SIG+	C12	GRN
TELM SIG−	C13	RED

STEREO AMPLIFIER CONNECTOR C (23P)

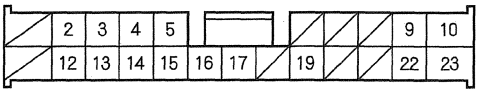

Wire side of female terminals

Is there continuity?

YES—There is a short to body ground in the wire(s) between the stereo amplifier connector and the HandsFreeLink control unit. Replace the affected shielded harness. ■

NO—Go to step 14.

14. Check for continuity between stereo amplifier connector and the HandsFreeLink control unit 28P connector according to the table.

From terminal	To terminals
HandsFreeLink control unit connector	Stereo amplifier connector
No. 26	C12 (GRN), C13 (RED)

STEREO AMPLIFIER CONNECTOR C (23P)

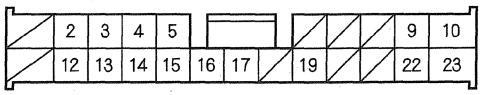

Wire side of female terminals

HANDSFREELINK CONTROL UNIT 22P CONNECTOR

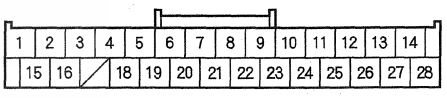

Wire side of female terminals

Is there continuity between the terminals?

YES—There is a short to the wire(s) between the stereo amplifier connector and the HandsFreeLink control unit. Replace the affected shielded harness. ■

NO—Go to step 15.

15. Substitute a known-good AcuraLink control unit (XM receiver) (see page 23-111), and recheck the function.

Does the problem go away?

YES—Update the AcuraLink control unit (XM receiver) if it does not have the latest software, then recheck. If the software is the latest, replace the AcuraLink control unit (XM receiver) (see page 23-111). ■

NO—Substitute a known-good HandsFreeLink control unit (see page 23-339), and recheck. If symptom/indication goes away, replace the original HandsFreeLink control unit (see page 23-339). If symptom/indication is still present, replace the audio unit (see page 23-106). ■

AcuraLink Control Unit Update

Special Tools Required
- GNA600 kit and an iN workstation with AcuraLink update software
- 256MB PCMCIA Memory Card
- AcuraLink Reprogramming Cable

NOTE:
- Whenever you install a new AcuraLink control unit, you must update the control unit with the latest software.
- The GNA600 is the only tool currently available to update the AcuraLink control unit.
- If you are updating a control unit in a new vehicle, make sure all the fuses are installed.
- Make sure the iN workstation has the latest HDS software installed. (The AcuraLink update software is contained in the HDS update CD.)
- The update may take up to 60 minutes.
- You cannot update an AcuraLink control unit with its current or previous software versions. It will only accept a new software version.
- Before you update the AcuraLink control unit, test the vehicle battery (see page 22-90), and only proceed if the results are good. Make sure the battery is connected to a battery booster (not a battery charger) while updating the control unit. If the battery is not in good condition, or it dies during the updating procedure, you may damage the AcuraLink control unit.
- If you encounter errors in the software, follow the on-screen instructions, or if necessary, reboot the iN workstation, and try again.
- There are five process involved in updating the AcuraLink control unit.
  - Setting up the GNA600
  - Capturing the current program ID from the AcuraLink control unit
  - Download the new software to the GNA600
  - Update the software in the vehicle AcuraLink control unit
  - Confirm the AcuraLink self-diagnosis
- Do the update with the ignition switch turned to LOCK (0).
- To prevent damage to the AcuraLink control unit, do not operate anything electrical (brakes, head lights, etc.) during the update.
- Check any official Honda service website for more service information about updating the AcuraLink control unit.
- To update the AcuraLink control unit, you must connect the GNA600 to the AcuraLink connector (A), not the DLC.
- Before you update an AcuraLink control unit, read the procedure. The order of connecting and disconnecting connectors is critical, and some steps must be done within a specified period of time. If the steps are not followed exactly, you may have to repeat the procedure from the start, and in some cases, you may damage the GNA600 or the AcuraLink control unit.

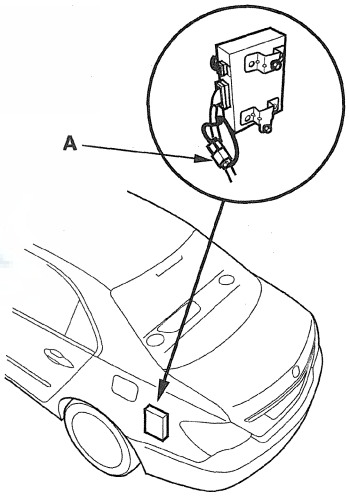

1. Make sure the ignition switch is turned to LOCK (0).
2. Open the trunk lid and remove rear shelf under cover (see page 20-83).
3. Launch the AcuraLink Update program, and follow the on-screen instructions to complete the update.

   NOTE: If the software in the AcuraLink control unit is the latest, disconnect the update tool from the AcuraLink connector. If the update is part of a troubleshooting or a repair procedure, return to that procedure and continue troubleshooting or repairing the vehicle.

Component Location Index

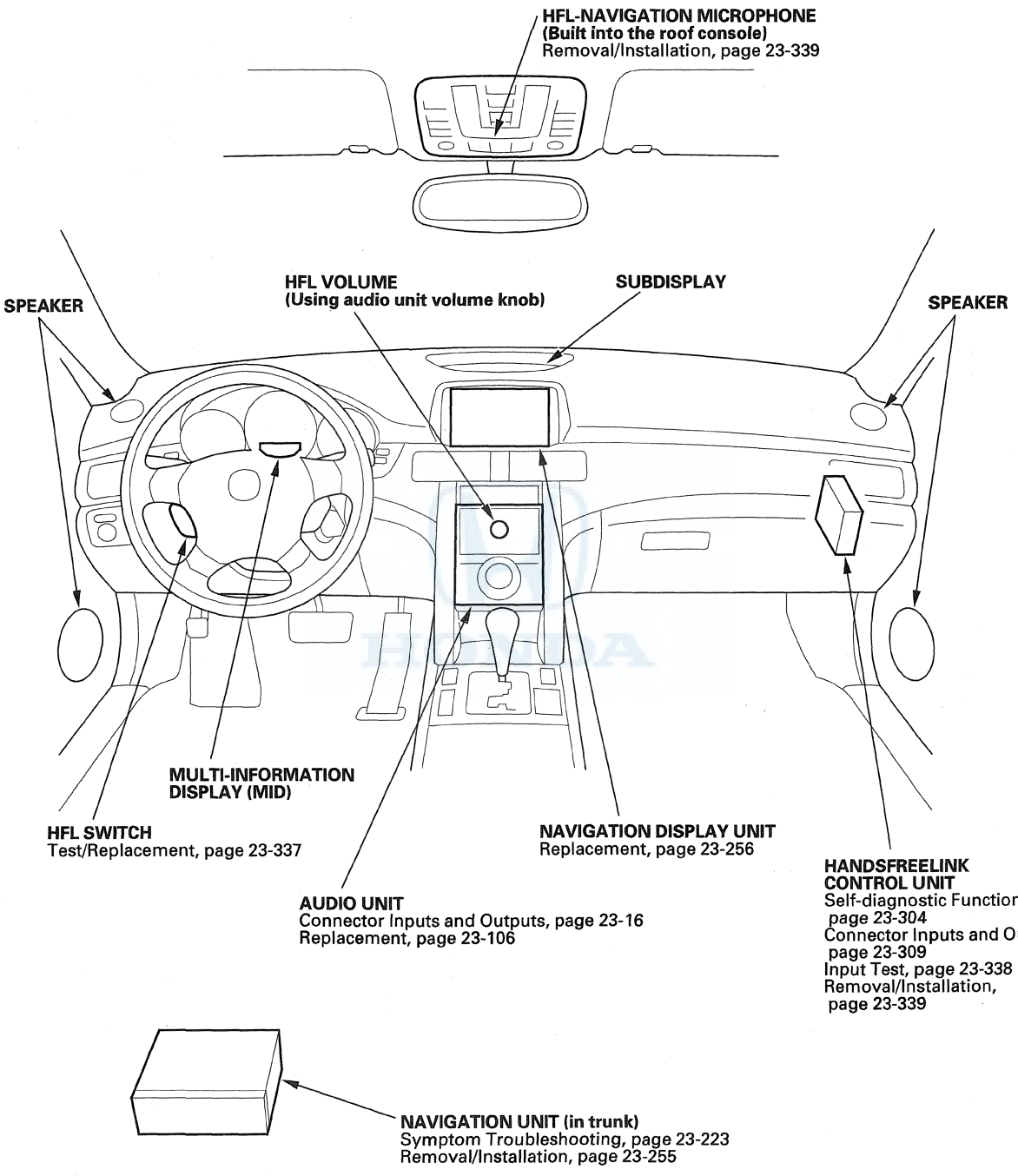

General Troubleshooting Information

How to Check for DTCs with the HDS

1. Make sure the ignition switch is in the LOCK (0) position.
2. Connect the HDS to the data link connector (DLC) (A) located under the driver's side of the dashboard.

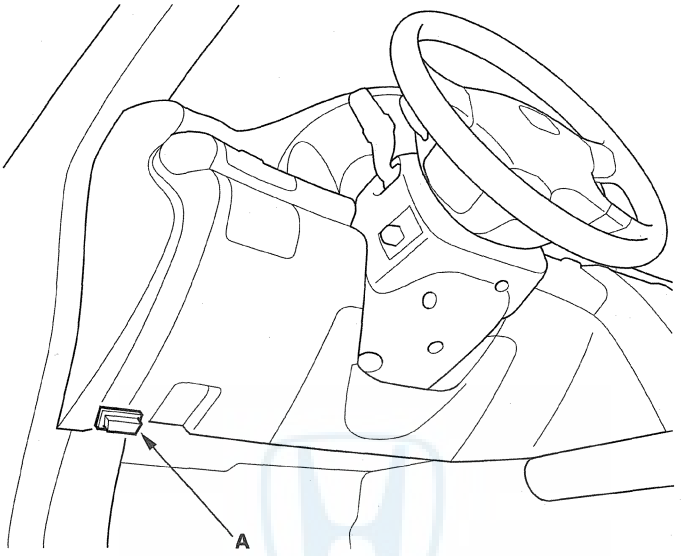

3. Turn the ignition switch to ON (II).
4. Make sure the HDS communicates with the vehicle and the HandsFreeLink control unit. If it doesn't, troubleshoot the DLC circuit (see page 11-211).
5. Select HandsFreeLink in the BODY ELECTRICAL menu.
6. Select DTCs in the HandsFreeLink menu.
7. Check for DTCs. If any DTCs are indicated, write down the DTCs, then go to the indicated DTC troubleshooting. If no DTCs are indicated, refer to symptom troubleshooting.

   NOTE:
   - After troubleshooting, clear the DTCs with the HDS.
   - For specific operations, refer to the user's manual that came with the HDS.

Introduction

The HFL system works only with Acura approved Bluetooth®-enabled cell phones with a hands-free profile. If you are not sure if a particular cell phone is compatible with the HFL system, Acura has a dedicated call center at (888) 528-7876 and website www.acura.com/handsfreelink to answer your questions.

The HFL system allows the user to make and receive hands-free calls. It cannot control the phone's performance (call quality and signal strength). For more information about performance and performance problems, refer to Dropped Calls.

Checking Cell Phone Compatibility

The most important step in troubleshooting HFL issues is to identify the client's phone model, software version, and wireless carrier of the phone in question. Not all phones with the Bluetooth feature and a hands-free profile are compatible with the Acura HFL system.

Go to www.acura.com/handsfreelink or call Acura's dedicated call center at 888-528-7876, and check if the client's phone is approved to work with the Acura HFL system.

NOTE:
- The lists of approved, archived, and currently testing phones are constantly changing, so make sure you view them frequently.
- Phones are added as they are approved.
- Phones can be removed from the approved list if a software bug is discovered that makes the phone incompatible. These phones can be added back to the approved list if the phone manufacturer corrects the bug.
- If the software bug is corrected, a new software version is created and may be listed in the Supported Features section of the phone.
- The software versions that are approved are now being listed in the Software Version field.
- If you cannot access the Acura website, call the HFL call center at (888) 528-7876 for further assistance. The call center is open Monday thru Friday from 6:00 a.m. to 6:00 p.m. CT; Saturday from 7:00 a.m. to 6:00 p.m. CT; and Sunday from 8:00 a.m. to 6:00 p.m. CT.

Voice Control Tips and Improving Voice Recognition

To give a voice command to the HFL system, press and release the HFL TALK button. Always wait for the beep, then give your command in a clear, natural voice. The HFL microphone is on the ceiling by the map lights. If the HFL system doesn't recognize your voice command, you'll hear "Pardon? Press the Talk button and say a command. For a list of commands, say handsfreehelp." If your command isn't recognized a second time, you'll hear "Bluetooth handsfreelink main menu. Available calling options are call, dial, redial, and transfer. Available setup options are phone setup, phone book, and system setup. For more detailed help, say handsfreehelp." If your command isn't recognized a third time, the HFL system sends you to its Help menu.

To hear a list of available options at any time, press the HFL TALK button and say "Hands-free help."

The HFL system may have problems recognizing some voices. To improve voice recognition:

- Close the windows and the moonroof.
- Set the fan speed to low (1 or 2) or off.
- Adjust the airflow from the center vents down, so that it's not blowing against the microphone on the ceiling.
- Speak in a clear and natural voice. If the system cannot recognize your command, try speaking louder, in a deeper tone.
- If the background noise is too loud, you may need to speak louder.
- If you speak with something in your mouth, or your voice is too high, the system may not interpret your command correctly.
- Find out if the problem is with one person or with everyone who uses the system. If the system has a problem with only one person's voice, this is a system limitation.

(cont'd)

General Troubleshooting Information (cont'd)

Many issues result from the client not using the system properly. Make sure the client is using the HFL buttons and not the navigation buttons. When the HFL TALK button is pressed, the client hears one audible tone. When the HFL BACK button is pressed, the client hears two audible tones. Make sure to press the HFL BACK button to exit the HFL main menu after completing a call and before giving any navigation commands.

The HFL system may experience a number recognition issue, such as when a client says a set of numbers in a group unrecognized by the system. The HFL system understands phone numbers in specific blocks of 1, 3, 4, 7, and 10 numbers. For example, the system understands:

1234567890
123-456-7890
1-2-3-4-5-6-7-8-9-0

The system may become confused if numbers are stated in other blocks, like the following:

1234-567-890
12-34-56-78-90
12345-67890
123-4567-890

Navigation Through Menus

To skip a voice prompt, press and release the HFL TALK button while the HFL system is speaking. The system beings listening for your next voice command.

To go back a step in a voice command sequence, press and release the HFL BACK button, or press the HFL TALK button and say "Go back." If you don't say anything while the HFL system is listening for your voice command, it times out and stops voice recognition. The next time you press and release the HFL TALK button, the HFL system begins listening from the point it timed out.

If you've finished or want to stop a voice command sequence at any time, press and release the HFL BACK button, or press and release the HFL TALK button, wait for the beep, and say "Cancel." The next time you press and release the HFL TALK button, the HFL system begins from its main menu. To avoid keeping the audio system muted, press and release the HFL BACK button when you are finished.

NOTE: You can say multiple commands in one sequence, like "Phone setup-pair" after pressing the HFL TALK button.

Pairing a Cell Phone

You must pair an approved Bluetooth-compatible phone to the HFL system before you can make and receive calls. For a current list of approved phones and specific phone pairing instructions for each phone, see Checking Cell Phone Compatibility, go to www.acura.com/handsfreelink, or call (888) 528-7876.

The following procedure works for most phones. If you cannot pair a phone to the HFL system with this procedure, refer to the phone's operating manual, visit www.acura.com/handsfreelink, or call (888) 528-7876.

NOTE:
- You cannot pair a phone while the vehicle is moving.
- Your phone must be in Discovery Mode.
- A maximum of six Bluetooth-compatible phones can be paired to the system.

'09 models

1. With the phone on and the ignition switch in ACCESSORY (I) or ON (II), press and release the HFL TALK button. After the beep, say "Phone setup." The HFL responds, "Phone setup options are status, pair, edit, delete, and list."

2. Press and release the HFL TALK button. After the beep, say "Pair." The HFL responds, "The pairing process requires operation of your mobile phone. For safety, only perform this function while the vehicle is stopped. State a four-digit code for pairing. Note this code. It will be requested by the phone."

3. Press and release the HFL TALK button. After the beep, say the four-digit code you want to use. This can be any four-digit number you want. For example, say "1, 2, 3, 4." The HFL responds, "1, 2, 3, 4. Is this correct?"

4. Press and release the HFL TALK button. After the beep, say "Yes." The HFL responds, "HFL is now searching for a Bluetooth phone. Make sure the phone you are trying to pair is in Discovery mode." If these steps do not work on the phone you are pairing, refer to the phone's operating manual.

5. Follow the prompts on your phone to get it into its Discovery mode. The phone will search for the HFL. When it comes up, select HandsFreeLink from the list of options displayed on your phone.

6. When asked by the phone, enter the four-digit code from step 3 into your phone. The HFL responds, "A new phone has been found. What would you like to name this phone?"

7. Press and release the HFL TALK button. After the beep, say the name you want to use. For example, say "Tom's phone." The HFL responds, "Tom's phone has been successfully paired. Returning to the main menu."

'10 models

1. With the phone on and the ignition switch in ACCESSORY (I) or ON (II), press and release the HFL TALK button. After the beep, say "Phone setup." The HFL responds, "Phone setup options are pair, edit, delete, list, status, next phone, set pairing code."

2. Press and release the HFL TALK button. After the beep, say "Pair." The HFL responds, "The pairing process requires operation of your mobile phone. For safety, only perform this function while the vehicle is stopped. For proper system function a compatible bluetooth phone is required. Please visit acura.com/handsfreelink for a list of approved phones and other system information. Handsfreelink is waiting to pair with a bluetooth phone. From your phone, search for bluetooth devices, and select handsfreelink. When prompted by your mobile phone enter the pairing code 0000."

3. When prompted by your cell phone, enter the pairing code 0000. Refer to your cell phone user guide for more information about searching for a bluetooth device.

4. Once the phone is recognized by the HFL system, it responds, "Handsfreelink has connected to a new phone. A name is needed to identify this phone. Press the TALK button and say a name. For example, Tom's phone."

5. Press and release the HFL TALK button. After the beep, say the name you want to use. For example, say "Tom's phone." The HFL responds, "Tom's phone has been successfully paired. Returning to the main menu."

   NOTE: If no phones have been paired to the system, upon pressing the talk button, the system will ask if you want to pair a phone. Press the Talk button and say "Yes". The system will then proceed to step 2.

(cont'd)

General Troubleshooting Information (cont'd)

Pairing Troubleshooting

Many pairing issues are resolved by altering the client's phone settings.

Bluetooth feature settings must be turned on. Phone manufacturers set the default to disable Bluetooth features to conserve battery life. Cell phones may provide procedures to Temporary Power On Bluetooth, or Power On Bluetooth. Turn the Bluetooth feature on, pair the phone to the vehicle, and confirm the phone is linked. Do this by turning the phone off and back on. Make or receive a call to confirm that the cell phone is successfully paired.

When the phone's Bluetooth feature is on, other handsfree accessories such as earpieces or headsets may automatically reconnect to the phone when you turn on the accessory or move it within range of the cell phone. This results in the phone not connecting to the HFL system when the client enters the vehicle. You must unlink the hands-free accessory from the phone before the HFL system can reconnect.

Some phones have an Auto Answer setting that functions with a headset. This setting must be turned off or the HFL system cannot accept any incoming calls. When this setting is on, it blocks the HFL system from answering the call, and the call goes to voice mail. This can cause the client to think that the cell phone is not paired properly.

If the HFL system has six phones paired, it will not tell you that it has reached its maximum, and will not allow you to pair a new phone. To check how many phones are paired, press and release the HFL TALK button. After the beep, say "Phone setup list." The HFL system lists every assigned phone name paired with it, then finishes by saying "The entire list has been read." Count the number of phones listed. If there are six, you must delete one phone before adding a new one.

Pairing Checks

For more information about pairing, refer to the cell phone owner's manual, or go to www.acura.com/handsfreelink or call Acura's dedicated call center at 888-528-7876.

1. Is the cell phone compatible with the HFL?
2. Is the Bluetooth feature turned on?
3. Is the client using the HFL buttons, not the navigation buttons, when pairing?
4. Is the cell phone battery fully charged, and is there good signal strength when pairing?
5. Do a soft reset on the cell phone.
6. If the client is trying to pair a Blackberry® or Palm Treo™ device, make sure the client uses the shift key when entering the pass code. If the shift key is not pressed, the client may be entering letters. The HFL does not recognize letters.

Dropped Calls

Clients may perceive dropped calls as being an HFL system fault, but most dropped calls are resultant from cell phone and cell phone carrier issues. The HFL system does not directly handle the cell phone signal. It allows the cell phones to transmit the cell phone audio over the vehicle's audio system.
Before troubleshooting for dropped calls, confirm the cell phone settings:

- Disable Audio Answer. If Auto Answer is enabled, incoming calls are routed to voice mail.
- Disable Always Ask/Trust, Authorize Device, or similar setting, If these settings are enabled, each time the HFL system attempts to link to the phone, the phone will ask if you want to connect. If you do not allow the connection, the HFL will not operate. The phone must be set to Never Ask, Authorize Device, etc. (based on the phone manufacturer and carrier) for permission. Refer to the cell phone owner's manual for more information or call Acura's dedicated call center at 888-528-7876.
- Disable Flip Open to a Answer. If this setting is enabled, the phone must remain open in the vehicle. If it is closed, the incoming calls are routed to voice mail.

Always confirm with the client if the number of dropped calls is higher while using the HFL system as opposed to using the cell phone only. Clients often confuse problems with their phone or carrier as a problem with the HFL system. The HFL system cannot control or determine:

- Cellular connection quality.
- Signal strength.
- Cellular coverage.
- Ambient weather conditions that affect cellular signals.

When a client complains about dropped calls, ask questions about when or where the calls are dropped, such as:

- Do you drive the same route on a regular basis?
- Does the call drop in the same location?
- Where do you keep your cell phone?
- Have you compared the number of dropped calls using the HFL versus making calls from the handset?
- Does your phone have an antenna that needs to be extended?

Many reasons for a dropped call are not related to the HFL system. Here are some causes for dropped calls:

- If the quantity of dropped calls is about the same when the client uses the HFL system versus the handset, the issue is likely due to the cellular phone or carrier.
- If the phone is equipped with a retractable antenna, it needs to be extended to maximize signal strength.
- If a client also notices that the calls tend to drop in the same areas, the HFL system may be operating normally, but something about the area diminishes cellular coverage to a point where the call drops.
- Hills or mountains can block or interfere with cellular signals.
- High-rise buildings, bridges, or other large structures may block or interfere with cellular signals.
- Placing the cell phone in a purse, in a metal briefcase, under the seat, in the glove box, or in the trunk can all affect signal reception.
- There are coverage gaps in the cellular service. When driving, a call is typically passed from one tower to another. If the client drives through an area where there is a coverage gap between towers, the call drops.
- Electrical storms, heavy rain, or overcast conditions interfere with signal strength.
- The cell phone battery's state of change can affect signal reception. A low battery may reduce the phone's ability to boost the antenna's power and function properly, especially in low signal strength areas. Some phone manufacturers trade off signal transmission and reception strength for battery life. As the battery weakens, the signal strength may also weaken. Some cell phones may operate more effectively than others in low signal strength areas, especially with a partially charged battery, and depending on whether or not the retractable antenna is fully extended (if applicable). On these models, make sure the antenna is always extended to maximize signal strength and extend battery life.

(cont'd)

General Troubleshooting Information (cont'd)

Phone Will Not Automatically Connect the HFL

If a client complains that their cell phone is not automatically connecting to the HFL system when they enter the vehicle, do this:

1. Make sure the Bluetooth feature is turned on in the cell phone.
2. Make sure the cell phone is properly paired to the HFL system.
3. Do a soft reset to the cell phone.
4. Check if the phone has an Authorized Connection or Trusted option.
5. Check the battery and signal strength on the cell phone. Pairing a phone requires optimal signal strength and a nearly full battery.

Incoming Calls

If a client complains that they cannot receive incoming calls through the HFL system, see if the call is routing to the cell phone instead of the HFL system. An easy way to know if the call is routed to the cell phone is when the client says, "I can't hear the caller, but they can hear me."

1. Make sure the Bluetooth feature is turned on in the cell phone.
2. Make sure the cell phone is paired to the HFL system and linked.
3. Make sure the answer settings in the cell phone are set to multi-key or any-key answer. If the phone is set to flip open to answer, recommend changing the setting to Any Key or leaving the phone flipped open when using the HFL system.
4. Make sure the Auto Answer feature is turned off in the cell phone.
5. Do a soft reset to the phone.
6. Make sure the battery is fully charged and there is adequate signal strength.
7. Ask the client if they have set specific ring tones or ringer IDs to specific contacts. If they have, recommend using one standard ring tone for all calls.
8. Make sure the client is pressing the HFL TALK button and not the HFL BACK button or the navigation buttons.

Outgoing Calls

If a client says that they cannot place a call using the HFL system, ask if the call was initiated through the HFL system or the cell phone itself.

If the call is placed by the HFL system:

1. Make sure the Bluetooth feature is turned on in the cell phone.
2. Make sure the cell phone is paired to the HFL system and linked.
3. Make sure the client is pressing the HFL TALK button before each command and going through the calling process correctly.
4. Make sure the client is pressing the HFL TALK button and not the HFL BACK button or the navigation buttons.
5. Check if the cell phone has an Authorized Connections or Trusted option.
6. Do a soft reset to the cell phone.

If the call is placed by the cell phone:

By default, the call will automatically transfer to HFL. This setting can be changed using the "Auto Transfer" command under the "System Setup" menu. If it is preferred to have a call placed by the cell phone remain on the cell phone, then the Auto Transfer featured should be set to Disabled. the "Transfer" command can be used to transfer calls between the HFL and handset.

Clearing the HFL System

NOTE:
- This operation clears the HFL system of all passcode(s), any paired phones, and all names in the HFL phonebook.
- Clearing the HFL system is recommend before selling the vehicle.
- If the system is locked and the pass code is lost or forgotten, see the symptom troubleshooting.

1. Press and release the HFL TALK button. After the beep, say "System Setup Clear" and the HFL system responds, "This process will clear all paired phones, clear all entries in the phonebook, clear the security passcode and restore all defaults in the system setup. Is this what you would like to do"?
2. Press and release the HFL TALK button. After the beep, say "Yes" and the HFL system responds, "Preparing to clear all paired phone, the system, which may take up to 2 minutes to complete". To proceed, press the talk button, and say "continue". Otherwise say "go back" or "cancel".
3. Press and release the HFL TALK button. After the beep, say "Continue" to proceed, or say "Go back" or "Cancel".
4. If you said "Continue", the HFL responds, "Please want unitl the system is cleared". After a short period of time (up to 2 minutes) the HFL responds, "The system has been cleared."

(cont'd)

General Troubleshooting Information (cont'd)

Self-diagnostic Function

NOTE: This procedure should be used only if HDS is unavailable.

To run the self-diagnostic function, do the following:

1. Turn the ignition switch to ON (II).
2. Press and hold the HFL BACK button for more than 5 seconds.
3. When the HandsFreeLink system enters the self-diagnostic function, the following will occur.
   - If the system has not completed testing for DTCs, the HandsFreeLink system says "The hands free system test is in progress".
   - If there is no DTC, the HandsFreeLink system says "The hands free system is OK".
   - If there is any DTC, the HandsFreeLink system says "The hands free system needs to be serviced".

NOTE: The self-diagnostic function can only be initiated while the HFL is in its idle state.

Glossary of Terms

Auto Answer

This cell phone setting forces incoming calls to automatically be answered by the handset. Disable this feature on the phone when using the HFL system, as it may interfere with the HFL system answering incoming calls. Set the phone setting to:

- Send Only
- Any Key
- Multi-Key answer

Answer Options

These cell phone settings allow you to select how you would like to answer an incoming call on the handset. The answer option in the phone can affect inbound calls on the HFL system.

Authorized Connection

This cell phone setting allows the phone to connect automatically with the HFL system without prompting the client for permission to connect. In some instances, it can affect the ability of the phone to properly route sound to the HFL system.

Bluetooth Power

This cell phone function enables or disables the Bluetooth application. When using a hands-free device such as HFL, the Bluetooth application needs to be enabled.

Discovery Mode

You need to have the cell phone in Discovery Mode to allow other devices with Bluetooth capabilities (such as the HFL system) to find the phone during the pairing process.

Downloaded Ringtones

A client gets these ringtones from an outside source, such as the internet or a mobile phone store.

HFL BACK button

Use this button on the steering wheel to end a call or return to a previous prompt in the HFL menu. Pressing the button twice or holding it down returns you to the HFL main menu.

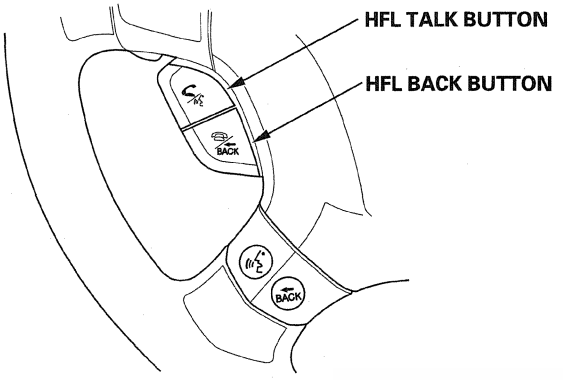

HFL TALK button

Use this button on the steering wheel to give commands. Press the button before a voice command is given.

Hard Reset

Hard resets clear the saved settings in the cell phone and restores it to the factory defaults. A hard reset should be done only as a last resort (See the cell phone owner's manual for more information).

Linking

This is when your paired phone is actively ready to use the HFL system. You can pair up to six phones to the HFL system, but only one phone can be linked at a time. If two paired phones are in the vehicle, only the phone that is linked can use the HFL system and functions. The second phone must be used as a normal handset.

Pairing

A description for linking two Bluetooth devices together. In this case, you are linking a cell phone with the HFL system. After the pairing process is complete, the devices are able to recognize each other and communicate wirelessly via Bluetooth.

Soft Reset

This helps to restore the basic functions of the phone. To do a soft reset, turn the phone power off, remove and reinsert the cell phone battery, then turn the phone back on.

Software Version

This refers to the software version loaded in the cell phone. The software version that was tested and determined to be compatible with the HFL system may be listed on the HFL web site. Not all software versions are compatible with the HFL system.

Standard Ringtone

These ringtones come factory-installed on the cell phone.

HONDA

DTC Troubleshooting Index

HandsFreeLink Control Unit

DTC	Description	DTC type	Page
B1750	Communication bus line error (BUS-OFF)	Loss of communication	(see page 22-148)
B1775	Microphone input/output short to power/open	Signal error	(see page 23-314)
B1776	Microphone input/output short to ground/open	Signal error	(see page 23-315)
B1779	HFL switch or voice control switch (HFL TALK/HFL BACK buttons) circuit open/short	Signal error	(see page 23-318)
B1780	HFL switch (HFL TALK/HFL BACK buttons) circuit short	Signal error	(see page 23-320)
B1792	HandsFreeLink control unit internal error	Internal error	(see page 23-321)

Symptom Troubleshooting Index

NOTE: Most HFL problems with pairing and HFL function are usually caused by the cell phone and its configuration. Call the HFL support desk at 888-528-7876 for help before replacing any HFL components.

Symptom	Diagnostic procedure	Also check for
The HFL digits do not go away from the MID display after pressing the HFL BACK button	Symptom Troubleshooting (see page 23-321)	Check and repair all CAN related DTCs.
The phone icon in the navigation route to screen is grayed-out	• There is no HFL-compatible phone paired to the vehicle. Pair an approved HFL-compatible phone to the vehicle • If the problem dose not go away, see Navigation does not call using the HFL troubleshooting (see page 23-313)	The phone must be on the Honda list of approved Bluetooth phones and configured correctly. For a current list of approved phones, go to handsfreelink.com, or call the HFL support desk at 888-528-7876 for further assistance.
The Acura approved Bluetooth phone is having problems pairing to the vehicle	HFL Self-diagnostic Function (see page 23-304) to see HFL System Troubleshooting (see page 23-313)	The phone must be on the list of Acura approved Bluetooth phones and configured correctly. For a current list of approved phones, go to www.acura.com/handsfreelink, or call the HFL support desk at 888-528-7876 for further assistance.
The Acura approved Bluetooth phone cannot use all its functions	HFL Self-diagnostic Function (see page 23-304) to see HFL System Troubleshooting (see page 23-313)	The phone must be on the list of Acura approved Bluetooth phones and configured correctly. For a current list of approved phones, go to www.acura.com/handsfreelink, or call the HFL support desk at 888-528-7876 for further assistance.
The Acura approved Bluetooth phone does not place or receive calls using the HFL system	HFL Self-diagnostic Function (see page 23-304) to see HFL System Troubleshooting (see page 23-313)	The phone must be on the list of Acura approved Bluetooth phones and configured correctly. For a current list of approved phones, go to www.acura.com/handsfreelink, or call the HFL support desk at 888-528-7876 for further assistance.
The client wants the HFL system reset (all phones and address information cleared from the HFL system)	Clearing the system (see page 23-303)	See the Owner's Manual for additional information.
The HFL system is locked and the pass code has been lost or forgotten	Symptom Troubleshooting (see page 23-322)	
The HFL system does not recognize all voice prompts	HFL Self-diagnostic Function (see page 23-304) to see HFL System Troubleshooting (see page 23-313)	Also see Voice control tips (see page 23-297).
The HFL system speaks in French or Spanish	See the HFL section in the Owner's Manual for Changing Language	

(cont'd)

Symptom Troubleshooting Index (cont'd)

Symptom	Diagnostic procedure	Also check for
The address book does not transfer from Honda approved Bluetooth phone to HFL system	There is no HFL-compatible phone paired to the vehicle or the approved phone does not support the function. Pair an approved HFL-compatible phone to the vehicle	The phone must be on the list of Acura approved Bluetooth phones and configured correctly. For a list of approved phones, go to www.acura.com/handsfreelink, or call the HFL support desk at 888-528-7876 for further assistance.
The HFL messages cannot be heard or are weak	Symptom troubleshooting (see page 23-322)	
No sound when Bluetooth audio is used	Symptom Troubleshooting (see page 23-325)	• Bluetooth phone or audio device • GA-NET line open/short • HandsFreeLink control unit • Audio unit
Bluetooth audio does not work	Symptom Troubleshooting (see page 23-330)	• Bluetooth phone or audio device • GA-NET line open/short • HandsFreeLink control unit
Bluetooth cell phone cannot be paired	Symptom Troubleshooting (see page 23-332)	• Bluetooth phone or audio device • HandsFreeLink control unit • Audio unit
The communication with cell phone is interrupted or changes	Symptom Troubleshooting (see page 23-333)	• Electric wave interference • HandsFreeLink control unit • Audio unit • Bluetooth phone or audio device • Harness/connector
Pairing instructions are not displayed on the screen	Symptom Troubleshooting (see page 23-335)	• Navigation display unit • Bluetooth phone or audio device • HandsFreeLink control unit • The Bluetooth phone or audio device may not be compatible (Some mobile phones do not support this function.)
Bluetooth cell phone audio function SKIP and PAUSE/RESUME do not work	Symptom Troubleshooting (see page 23-336)	Bluetooth phone (For further information, please contact to the phone company.)

System Description

HandsFreeLink Control Unit Inputs and Outputs

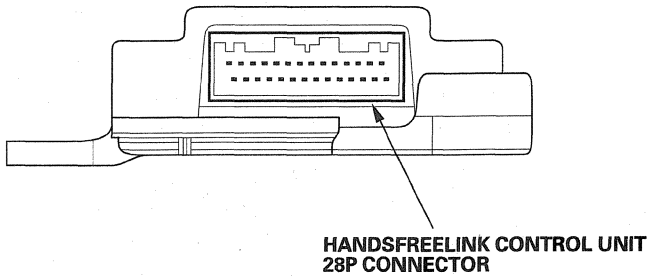

HandsFreeLink Control Unit 28P Connector

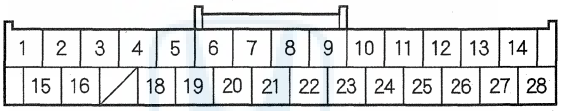

Wire side of female terminals

Cavity	Wire Color	Terminal Name	Connects to
1	BLK	GND	Body Ground to G651
2	PUR	HFL STRG SW	HFL switch
3	LT GRN	HFL MUTE	Audio unit
4	GRN	GA-NET BUS+	Navigation unit, AcuraLink control unit (XM receiver)*1, XM receiver*2, navigation display unit, USB adapter unit
5	RED	GA-NET BUS−	Navigation unit, AcuraLink control unit (XM receiver)*1, XM receiver*2, navigation display unit, USB adapter unit
6	BLK	HIP/NAVI COMM 4	AcuraLink control unit (XM receiver)*1, Navigation unit*2

* 1: With AcuraLink
* 2: Without AcuraLink

(cont'd)

System Description (cont'd)

Cavity	Wire Color	Terminal Name	Connects to
7	GRN	HIP/NAVI COMM 3	AcuraLink control unit (XM receiver)*1, Navigation unit*2
8	GRY	HIP/NAVI COMM SH	Shield for terminals No. 6, No. 7, No. 20, and No. 21
9	GRN	AUDIO R+	AcuraLink control unit (XM receiver)*1, XM receiver*2, Audio unit, USB adapter unit
10	WHT	AUDIO L+	AcuraLink control unit (XM receiver)*1, XM receiver*2, Audio unit, USB adapter unit
11	GRN	TELM SIG+	Stereo amplifier
12	GRY*4	MIC SH	Shield for terminals No. 13 and No. 14
13	GRN	MIC+	HFL-navigation microphone
14	RED	MIC−	HFL-navigation microphone
15	WHT	+B	No. 5 (7.5 A) fuse in the driver's under-dash fuse/relay box
16	PUR	ACC	No. 32 (10 A) fuse in the driver's under-dash fuse/relay box
18	LT GRN	B-CAN	B-CAN communication bus line
19	GRY*4	GA-NET BUS SH	Shield terminal No. 4 and No. 5
20	RED	HIP/NAVI COMM 1	AcuraLink control unit (XM receiver)*1, Navigation unit*2
21	WHT	HIP/NAVI COMM 2	AcuraLink control unit (XM receiver)*1, Navigation unit*2
22	GRY*4	AUDIO SH	Shield for terminals No. 9, No. 10, No. 23, and No. 24
23	BLK	AUDIO R−	AcuraLink control unit (XM receiver)*1, XM receiver*2, Audio unit, USB adapter unit
24	RED	AUDIO L−	AcuraLink control unit (XM receiver)*1, XM receiver*2, Audio unit, USB adapter unit
25	RED	TELM SIG−	Stereo amplifier
26	GRY*4	TELM SIG SH	Shield for terminals No. 11 and No. 25
27	GRN	HFL-NAVI MIC+	Navigation unit
28	RED	HFL-NAVI MIC−	Navigation unit

* 1: With AcuraLink
* 2: Without AcuraLink
* 3: With XM receiver
* 4: The shielded wires have a heat-shrink tube insulating the outside of the wire. The color of the insulating tube, typically black or dark gray, may not match the color of the wire shown on the circuit diagram.

Circuit Diagram

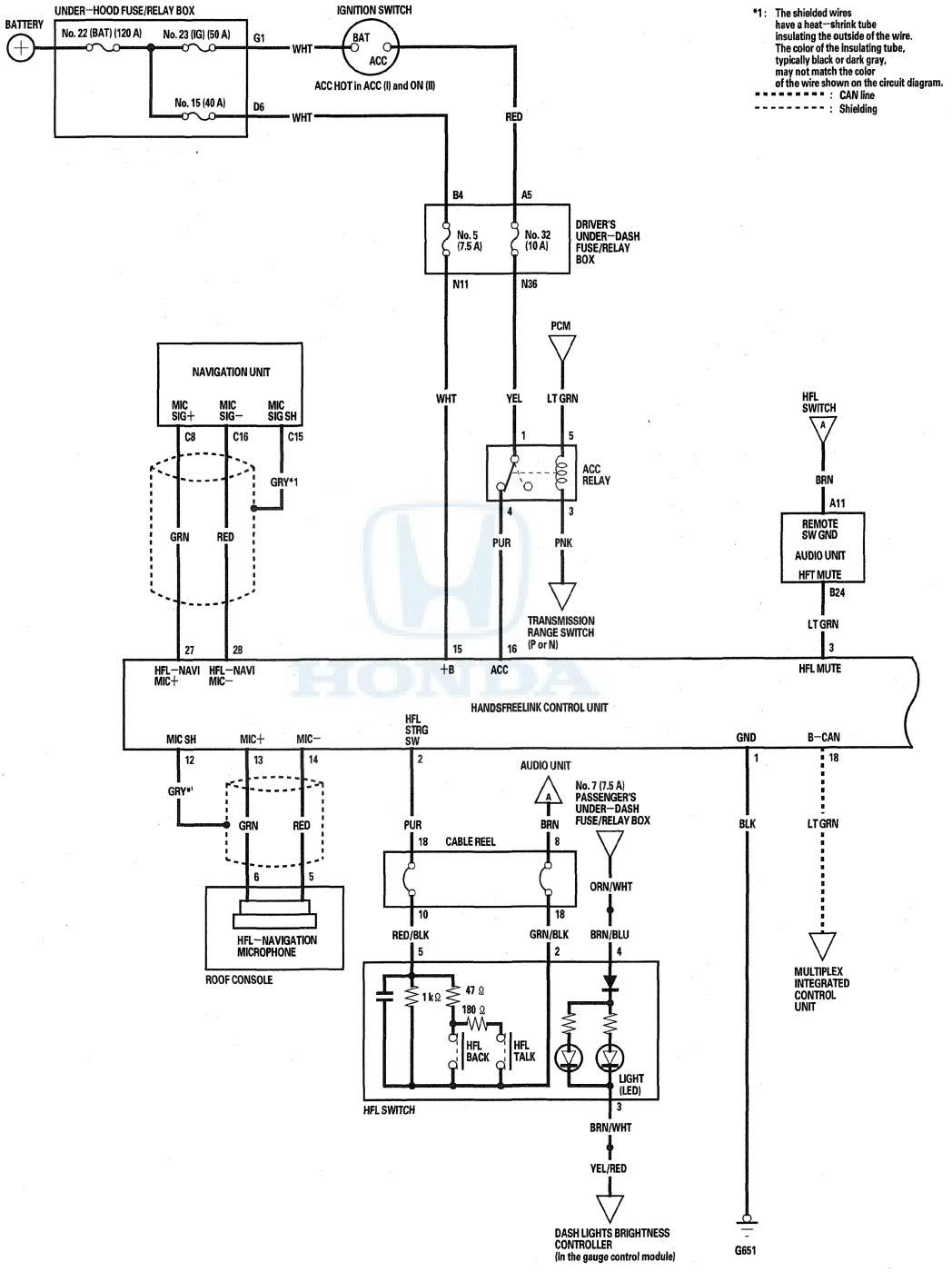

(cont'd)

Circuit Diagram (cont'd)

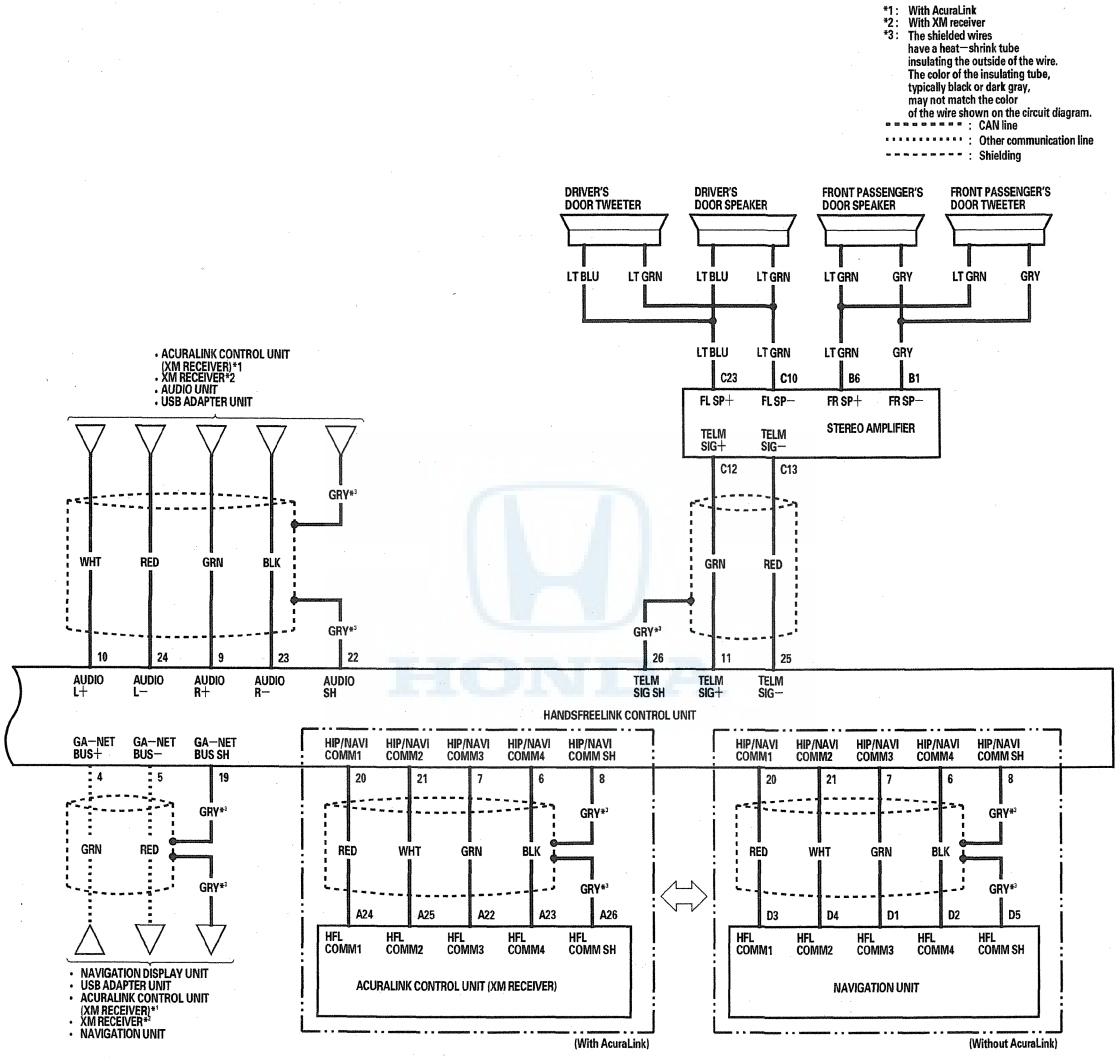

HFL System Troubleshooting

NOTE:
- Make sure the phone is Honda approved and configured correctly.
- One line, go to www.acura.com/handsfreelink or call the HFL support desk at 888-528-7876.
- Before doing this troubleshooting, refer to General Troubleshooting (see page 23-296) to make sure the phone is compatible and configured correctly.
- You must be able to duplicate the client's concern to successfully diagnose and the problem.
- Always use the client's phone.

1. Connect the HDS to the DLC (see page 23-296).

2. Turn the ignition switch to ON (II).

3. Check for DTCs.

   Are any DTCs indicated?

   YES—Repair the indicated DTCs, and recheck. ■

   NO—Go to step 4.

4. Try to duplicate the problem or have the client demonstrate the problem.

   Can you duplicate the problem?

   YES—Go to step 5.

   NO—The system is OK at this time. ■

5. Pair the phone to a known-good vehicle (same model, year, and trim), and try to duplicate the problem.

   Does the phone have the same problem on the known-good vehicle?

   YES—Call the HFL support desk at 888-528-7876 to make sure the phone is configured correctly and has the correct software. If the phone is configured correctly, it is either a characteristic of the HFL system, or a characteristic of the particular approved phone being used. Explain to your client that this is a system characteristic. Another phone from the approved phone list may give more favorable results. ■

   NO—Substitute a known-good HandsFreeLink control unit and recheck. If the problem goes away, replace the original HandsFreeLink control unit (see page 23-339). ■

DTC Troubleshooting

DTC B1775: Microphone Input/Output Short to Power/Open

NOTE: If you are troubleshooting multiple DTCs, be sure to follow the instructions in B-CAN system diagnosis test mode A (see page 22-131).

1. Connect the HDS to the DLC (see page 23-296).
2. Clear the DTCs with the HDS.
3. Turn the ignition switch to LOCK (0), and then back ON (II).
4. Check for DTCs with the HDS.

   Is DTC B1775 indicated?

   YES—Go to step 5.

   NO—Intermittent failure, the system is OK at this time.■
5. Turn the ignition switch to LOCK (0).
6. Remove the roof console (see page 22-307) and the glove box (see page 20-103).
7. Disconnect the roof console 28P connector and the HandsFreeLink control unit 28P connector.
8. Turn the ignition switch ON (II).
9. Measure the voltage between the HandsFreeLink control unit 28P connector terminal No. 13 and body ground.

HANDSFREELINK CONTROL UNIT 28P CONNECTOR

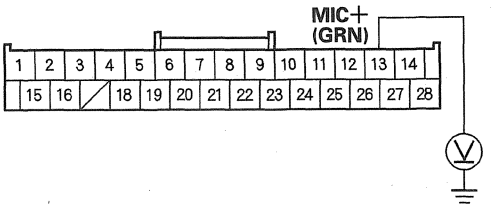

Wire side of female terminals

Is there battery voltage?

YES—There is a short in the wire between the HandsFreeLink control unit and the roof console. Replace the affected shielded harness.■

NO—Go to step 10.

10. Turn the ignition switch to LOCK (0).

11. Check for continuity between the HandsFreeLink control unit 28P connector terminal No. 13 and the roof console 28P connector terminal No. 6.

HANDSFREELINK CONTROL UNIT 28P CONNECTOR
Wire side of female terminals

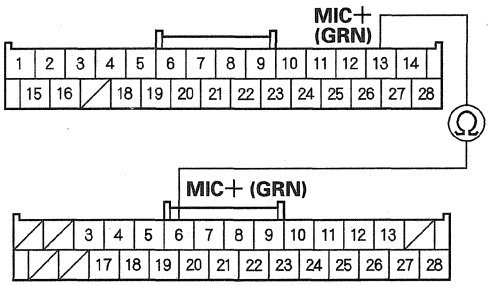

ROOF CONSOLE 28P CONNECTOR
Wire side of female terminals

Is there continuity?

YES—Substitute a known-good HandsFreeLink control unit (see page 23-339), and recheck. If the symptom/indication goes away, replace the original HandsFreeLink control unit (see page 23-339). If the symptom/indication does not go away, replace the HFL-navigation microphone (see page 23-339). ■

NO—There is an open in the wire between the HandsFreeLink control unit and the roof console. Replace the affected shielded harness. ■

DTC B1776: Microphone Input/Output Short to Ground/Open

NOTE: If you are troubleshooting multiple DTCs, be sure to follow the instructions in B-CAN system diagnosis test mode A (see page 22-131).

1. Connect the HDS to the DLC (see page 23-296).
2. Clear the DTCs with the HDS.
3. Turn the ignition switch to LOCK (0), and then back ON (II).
4. Check for DTCs with the HDS.

   Is DTC B1776 indicated?

   YES—Go to step 5.

   NO—Intermittent failure, the system is OK at this time. ■

5. Turn the ignition switch to LOCK (0).
6. Remove the roof console (see page 22-307) and the glove box (see page 20-103).
7. Disconnect the roof console 28P connector and the HandsFreeLink control unit 28P connector.

(cont'd)

DTC Troubleshooting (cont'd)

8. Check for continuity between body ground and HandsFreeLink control unit 28P connector the terminals No. 13 and No. 14 individually, then between terminals No. 12 and No. 13.

HANDSFREELINK CONTROL UNIT 28P CONNECTOR

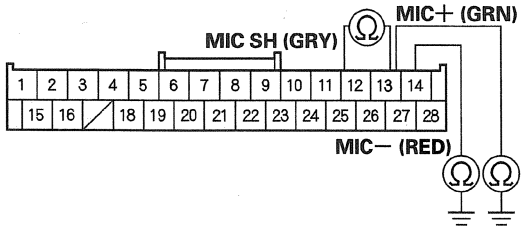

Wire side of female terminals

Is there continuity?

YES—There is a short in the wires between the HandsFreeLinks control unit and the roof console. Replace the affected shielded harness. ■

NO—Go to step 9.

9. Check for continuity between the HandsFreeLink control unit 28P connector the roof console 28P connector according to the table.

HandsFreeLink control unit connector	Roof console connector	Wire color
No. 13	No. 6	GRN
No. 14	No. 5	RED

HANDSFREELINK CONTROL UNIT 28P CONNECTOR

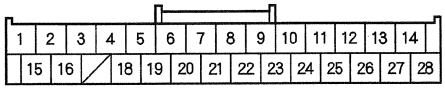

Wire side of female terminals

ROOF CONSOLE 28P CONNECTOR

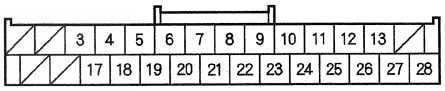

Wire side of female terminals

Is there continuity?

YES—Go to step 10.

NO—There is an open in the wires between the HandsFreeLinks control unit and the roof console. Replace the affected shielded harness. ■

10. Disconnect the navigation unit connector C (16P).

11. Check for continuity between body ground and HandsFreeLink control unit 28P connector terminals No. 27 and No. 28 individually.

HANDSFREELINK CONTROL UNIT 28P CONNECTOR

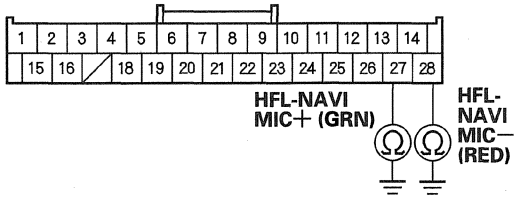

Wire side of female terminals

Is there continuity?

YES—There is an short in the wires between the HandsFreeLink control unit and the navigation unit. Replace the affected shielded harness. ■

NO—Go to step 12.

12. Check for continuity between the HandsFreeLink control unit 28P connector and navigation unit connector C (16P) according to the table.

HandsFreeLink control unit connector	Navigation unit connector	Wire color
No. 27	C8	GRN
No. 28	C16	RED

HANDSFREELINK CONTROL UNIT 28P CONNECTOR

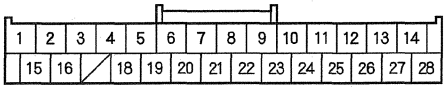

Wire side of female terminals

NAVIGATION UNIT CONNECTOR C (16P)

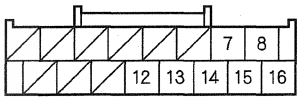

Wire side of female terminals

Is there continuity?

YES—Substitute a known-good HandsFreeLink control unit (see page 23-339), and recheck. If the symptom/indication goes away, replace the original HandsFreeLink control unit (see page 23-339). If the symptom/indication does not go away, replace the faulty navigation unit (see page 23-255). ■

NO—There is an open in the wires between the HandsFreeLink control unit and the navigation unit. Replace the affected shielded harness. ■

DTC Troubleshooting (cont'd)

DTC B1779: HFL Switch or Voice Control Switch (HFL TALK/HFL BACK Buttons) Circuit Open/Short

NOTE: If you are troubleshooting multiple DTCs, be sure to follow the instructions in B-CAN system diagnosis test mode A (see page 22-131).

1. Connect the HDS to the DLC (see page 23-296).
2. Clear the DTCs with the HDS.
3. Turn the ignition switch to LOCK (0), then start the vehicle and turn the steering wheel back and forth several times.
4. Check for DTCs with the HDS.

   Is DTC B1779 indicated?

   YES—Go to step 5.

   NO—Intermittent failure, the system is OK at this time. ■
5. Turn the ignition switch to LOCK (0).
6. Do the HFL switch test (see page 23-337).

   Is the switch OK?

   YES—Go to step 7.

   NO—Replace the HFL switch (see page 23-337). ■
7. Remove the glove box (see page 20-103).
8. Disconnect the HandsFreeLink control unit 28P connector.
9. Disconnect the HFL switch 6P connector.
10. Turn the ignition switch ON (II).
11. Measure the voltage between the HFL switch connector terminal No. 5 and body ground.

HFL SWITCH 6P CONNECTOR

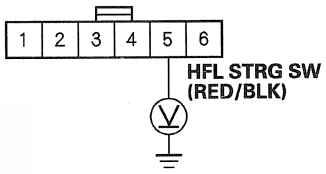

Wire side of female terminals

Is there voltage?

YES—Repair short to power on the PUR wire.

NO—Go to step 12.

12. Check for continuity between the HandsFreeLink control unit 28P connector terminal No. 2 and the HFL switch 6P connector terminal No. 5.

HANDSFREELINK CONTROL UNIT 28P CONNECTOR
Wire side of female terminals

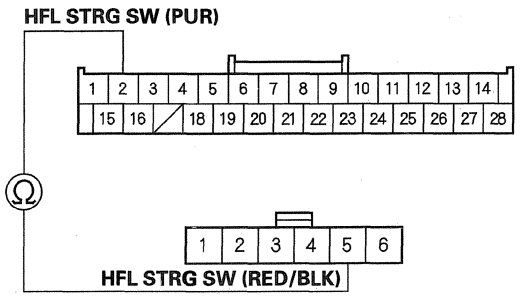

HFL SWITCH CONNECTOR (6P)
Wire side of female terminals

Is there continuity?

YES—Go to step 13.

NO—Repair open in the RED/BLK wire between the HFL switch, cable reel, and the HandsFreeLink control unit. ■

13. Check for continuity between the HFL switch 6P connector terminal No. 2 and audio unit connector A (20P) terminal No. 11.

AUDIO UNIT CONNECTOR A (20P)
Wire side of female terminals

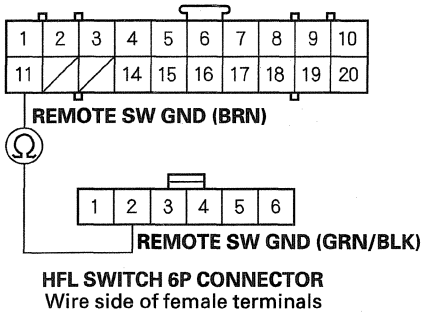

HFL SWITCH 6P CONNECTOR
Wire side of female terminals

Is there continuity?

YES—Check for loose or poor connections at the audio unit, HandsFreeLink control unit, and the HFL switch. If the connections are OK, substitute a known-good HandsFreeLink control unit. If the problem is gone, replace the original HandsFreeLink control unit (see page 23-339). ■

NO—Repair open in the wire between the HFL switch, the cable reel, and the audio unit. ■

DTC Troubleshooting (cont'd)

DTC B1780: HFL Switch (HFL TALK/HFL BACK Buttons) Circuit Short

NOTE: If you are troubleshooting multiple DTCs, be sure to follow the instructions in B-CAN system diagnosis test mode A (see page 22-131).

1. Connect the HDS to the DLC (see page 23-296).
2. Clear the DTCs with the HDS.
3. Turn the ignition switch to LOCK (0), then start the vehicle and turn the steering wheel back and forth, from lock to lock, several times.
4. Check for DTCs with the HDS.

   Is DTC B1780 indicated?

   YES—Go to step 5.

   NO—Intermittent failure, the system is OK at this time. ■
5. Turn the ignition switch to LOCK (0).
6. Do the HFL switch test (see page 23-337).

   Is the switch OK?

   YES—Go to step 7.

   NO—Replace the HFL switch (see page 23-337). ■
7. Remove the glove box (see page 20-103).
8. Disconnect the HandsFreeLink control unit 28P connector.
9. Disconnect the HFL switch 6P connector.
10. Turn the ignition switch to LOCK (0).
11. Check for continuity between the HandsFreeLink control unit 28P connector terminal No. 2 and body ground.

HANDSFREELINK CONTROL UNIT 28P CONNECTOR

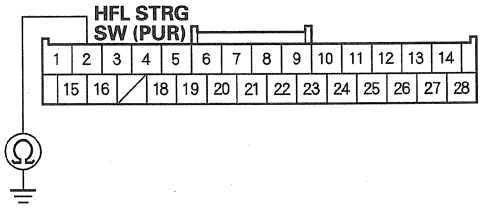

Wire side of female terminals

Is there continuity?

YES—Repair short in the wire. ■

NO—Substitute a known-good HandsFreeLink control unit (see page 23-339), and recheck. If the symptom/indication goes away, replace the original HandsFreeLink control unit (see page 23-339). ■

DTC B1792: HandsFreeLink Control Unit Internal Error

1. Connect the HDS to the DLC (see page 23-296).
2. Clear the DTCs with the HDS.
3. Turn the ignition switch to LOCK (0), and then back ON (II).
4. Check for DTCs with the HDS.

   Is DTC B1792 indicated?

   YES—Substitute a known-good HandsFreeLink control unit (see page 23-339), and recheck. If the symptom/indication goes away, replace the original HandsFreeLink control unit (see page 23-339). ■

   NO—Intermittent failure, the system is OK at this time. ■

The HFL digits do not go away from the MID display after pressing the HFL BACK button

1. Connect the HDS to the DLC (see page 23-296).
2. Clear the DTCs with the HDS.
3. Turn the ignition switch to LOCK (0), and then to ON (II).
4. Check for DTCs.

   Are there any DTCs indicated?

   YES—Repair the indicated DTCs, and recheck. ■

   NO—Go to step 5.

5. Turn the ignition switch to LOCK (0).
6. Substitute a known-good HandsFreeLink control unit, then turn the ignition switch ON (II), and recheck the MID.

   Are the messages cleared?

   YES—Substitute a known-good HandsFreeLink control unit (see page 23-339), and recheck. If the symptom/indication goes away, replace the original HandsFreeLink control unit (see page 23-339). ■

   NO—Replace the gauge control module (see page 22-419). ■

Symptom Troubleshooting (cont'd)

The HFL system is locked and the pass code has been lost or forgotten

1. Connect the HDS to the DLC (see page 23-296).
2. Turn the ignition switch ON (II).
3. From the Body Electrical menu, select HandsFreeLink.
4. Select Miscellaneous Tests, then select Pass code reset.
5. Follow the HDS system prompts to reset the pass code.

The HFL message cannot be heard or are weak

NOTE: Vehicles equipped with AcuraLink, go to AcuraLink messages cannot be heard or are weak.

1. Turn the ignition switch ON (II).
2. Check that the audio system is operating normally and the speaker sound levels from different audio sources (AM/FM, XM, CD/DVDs, Navigation, etc.).

   Does the audio system work normally and is the audio output from the speaker normal when playing various audio sources?

   YES—Go to step 3.

   NO—Refer to the audio system symptom troubleshooting. ■
3. Check for DTCs.

   Are there any DTCs?

   YES—Repair the indicated DTCs.

   NO—Go to step 4.
4. Press the HFL TALK button.

   Does the audio system mute when HFL messages are being played?

   YES—Go to step 5.

   NO—Go to step 10.
5. Turn the ignition switch to LOCK (0).
6. Disconnect stereo amplifier connector C (23P) and the HandsFreeLink control unit 28P connector.

7. Check for continuity between the HandsFreeLink control unit 28P connector terminals No. 11 and No. 25 and stereo amplifier connector C (23P) terminals No. 12 and No. 13 according to the table.

HandsFreeLink control unit connector	Stereo amplifier connector	Wire color
No. 11	C12	GRN
No. 25	C13	RED

HANDSFREELINK CONTROL UNIT 28P CONNECTOR

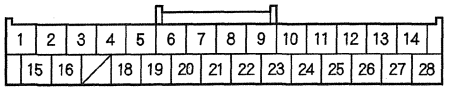

Wire side of female terminals

STEREO AMPLIFIER CONNECTOR C (23P)

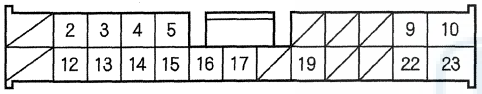

Wire side of female terminals

Is there continuity?

YES—Go to step 8.

NO—There is an open in the wire(s) between the HandsFreeLink control unit and the stereo amplifier. Replace the affected shielded harness. ■

8. Check for continuity between body ground and stereo amplifier connector C (23P) terminals No. 12 and No. 13 individually.

STEREO AMPLIFIER CONNECTOR C (23P)

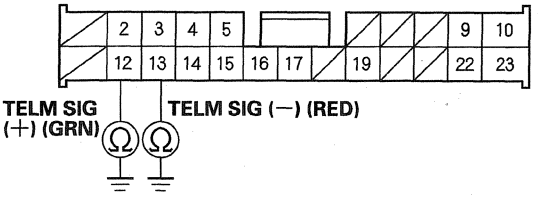

Wire side of female terminals

Is there continuity?

YES—There is a short to body ground in the wire(s) between the HandsFreeLink control unit and the stereo amplifier. Replace the affected shielded harness. ■

NO—Go to step 8.

(cont'd)

Symptom Troubleshooting (cont'd)

9. Check for continuity between the terminals of stereo amplifier connector C (23P) according to the table.

From terminal	To terminals
HandsFreeLink control unit connector	Stereo amplifier connector
No. 26 (GRY)	C12 (GRN)
	C13 (RED)

HANDSFREELINK CONTROL UNIT 28P CONNECTOR

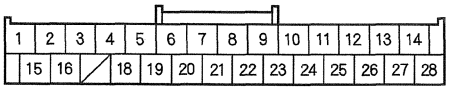

Wire side of female terminals

STEREO AMPLIFIER CONNECTOR C (23P)

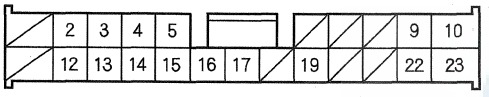

Wire side of female terminals

Is there continuity between any of the terminals?

YES—There is a short in the wire(s) between the HandsFreeLink control unit and the stereo amplifier. Replace the affected shielded harness. ■

NO—Substitute a known-good HandsFreeLink control unit (see page 23-339), and recheck. If the symptom/indication goes away, replace the original HandsFreeLink control unit (see page 23-339). If the symptom/indication is still present, replace the stereo amplifier (see page 23-111). ■

10. Turn the ignition switch to LOCK (0).

11. Disconnect the HandsFreeLink control unit 28P connector and stereo amplifier connector C (23P).

12. Check for continuity between the HandsFreeLink control unit 28P connector terminal No. 3 and audio unit connector B (32P) terminal No. 24.

HANDSFREELINK CONTROL UNIT 28P CONNECTOR
Wire side of female terminals

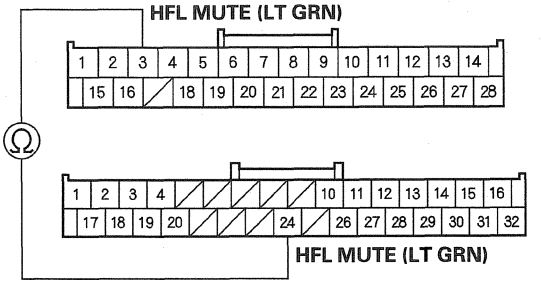

AUDIO UNIT CONNECTOR B (32P)
Wire side of female terminals

Is there continuity?

YES—Go to step 13.

NO—Repair open in the wire between the HandsFreeLink control unit and the audio unit. ■

13. Check for continuity between HandsFreeLink control unit 28P connector terminal No. 3 and body ground.

HANDSFREELINK CONTROL UNIT 28P CONNECTOR

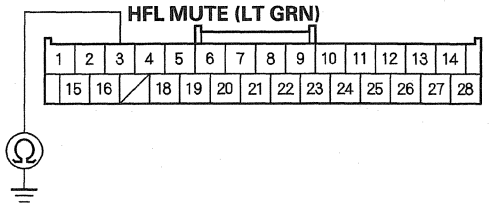

Wire side of female terminals

Is there continuity?

YES—Repair short to body ground in the wire between the HandsFreeLink control unit and the audio unit. ■

NO—Substitute a known-good HandsFreeLink control unit (see page 23-339), and recheck. If the symptom/indication goes away, replace the original HandsFreeLink control unit (see page 23-339). If the symptom/indication is still present, replace the audio unit (see page 23-106). ■

No sound when Bluetooth audio is used

NOTE:
- Check the vehicle battery condition first (see page 22-90).
- Check the connectors for poor connections or loose terminals.
- Set the fader and balance positions to the center.
- Check if the audio device functions normally.
- Make sure the Bluetooth phone is properly paired.

1. Turn the ignition switch to ON (II).

2. Turn on the audio unit, and check for sound in each mode (AM, FM, XM, and CD).

   Is the sound is normal?

   YES—Go to step 3.

   NO—Go to Sound Quality Diagnosis (see page 23-100) or no sound is heard from speaker(s) (see page 23-49). ■

3. Press the DISC/AUX button, and check if the screen changes to Bluetooth Audio source.

   Does it change to Bluetooth Audio source?

   YES—Go to step 4.

   NO—Substitute a known-good audio unit (see page 23-106), and recheck. If the symptom/indication goes away, replace the original audio unit (see page 23-106).

(cont'd)

Symptom Troubleshooting (cont'd)

4. Check if the Bluetooth phone is connected when switching to Bluetooth Audio screen by pressing the DISC/AUX button.

   Is NO CONNECTION displayed?

   YES—Go to symptom troubleshooting for the Bluetooth audio device cannot be connected.

   NO—Go to step 5.

5. Check if the Bluetooth audio device can be played.

   Does the Bluetooth audio play?

   YES—Intermittent failure, the audio unit is OK at this time. ■

   NO—Go to step 6.

6. Connect the HDS to the DLC. Check for HFL DTCs.

   Is there any DTCs indicated?

   YES—Go to HFL DTC troubleshooting. ■

   NO—
   - With AcuraLink, XM receiver: Go to step 7.
   - Without XM receiver: Go to step 23.

7. Turn on the audio unit, and check for sound in each mode (XM and USB).

   Is the sound normal?

   YES—Go to step 8.

   NO—Go to step 11.

8. Turn the ignition switch to LOCK (0).

9. Disconnect audio unit connector C (14P) and the HandsFreeLink control unit 28P connector.

10. Check for continuity between audio unit connector C (14P) and the HandsFreeLink control unit 28P connector according to the table.

	Audio unit connector	HandsFreeLink control unit connector	Wire color
AUDIO R+	C5	No. 9	GRN
AUDIO R−	C13	No. 23	BLK
AUDIO L+	C6	No. 10	WHT
AUDIO L−	C14	No. 24	RED

AUDIO UNIT CONNECTOR C (14P)

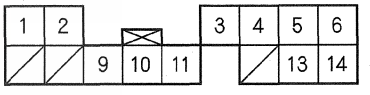

Wire side of female terminals

HANDSFREELINK CONTROL UNIT 28P CONNECTOR

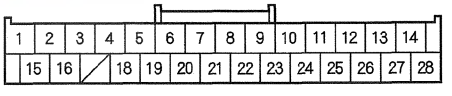

Wire side of female terminals

Is there continuity?

YES—Substitute a known-good HandsFreeLink control unit (see page 23-339), and recheck. If the symptom/indication goes away, replace the original HandsFreeLink control unit (see page 23-339). ■

NO—There is an open in the wire(s) between the audio unit and the HandsFreeLink control unit. ■

11. Turn the ignition switch to LOCK (0).

12. Disconnect audio unit connector C (14P), AcuraLink control unit (XM receiver) connector A (32P)/XM receiver A (14P), USB adapter unit connector A (14P) and the HandsFreeLink control unit 28P connector.

13. Check for continuity between the HandsFreeLink control unit 28P connector and body ground according to the table.

	HandsFreeLink control unit connector	Wire color
AUDIO R+	No. 9	GRN
AUDIO R−	No. 23	BLK
AUDIO L+	No. 10	WHT
AUDIO L−	No. 24	RED

HANDSFREELINK CONTROL UNIT 28P CONNECTOR

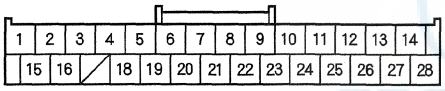

Wire side of female terminals

Is there continuity?

YES—There is a short in the wire(s) between the HandsFreeLink control unit 28P connector and body ground. Replace the affected shielded harness. ■

NO—Go to step 14.

14. Check for continuity between audio unit connector C (14P) and the HandsFreeLink control unit 28P connector according to the table.

	Audio unit connector	HandsFreeLink control unit connector	Wire color
AUDIO R+	C5	No. 9	GRN
AUDIO R−	C13	No. 23	BLK
AUDIO L+	C6	No. 10	WHT
AUDIO L−	C14	No. 24	RED

AUDIO UNIT CONNECTOR C (14P)

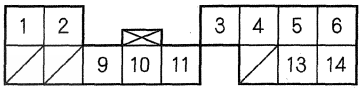

Wire side of female terminals

HANDSFREELINK CONTROL UNIT 28P CONNECTOR

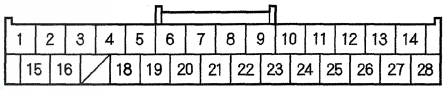

Wire side of female terminals

Is there continuity?

YES—Go to step 15.

NO—There is an open in the wire between the audio unit and the HandsFreeLink control unit. Replace the affected shielded harness. ■

(cont'd)

Symptom Troubleshooting (cont'd)

15. Check for continuity between the terminals of the HandsFreeLink control unit 28P connector according to the table.

From terminal	To terminals
No. 22 (GRY)	No. 9 (GRN), No. 23 (BLK), No. 10 (WHT), No. 24 (RED)

HANDSFREELINK CONTROL UNIT 28P CONNECTOR

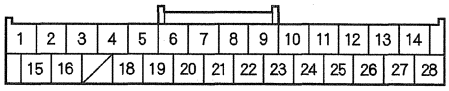

Wire side of female terminals

Is there continuity?

YES—There is a short in the wire(s) between the HandsFreeLink control unit and the audio unit connector. Replace the affected shield harness. ■

NO—Go to step 16.

16. Reconnect audio unit connector C (14P) and the HandsFreeLink control unit 28P connector.

17. Turn the ignition switch to ON (II).

18. Check if the Bluetooth audio device can be played.

Does the Bluetooth audio play?

YES—Internal malfunction in unit where a connector for either the AcuraLink control unit (XM receiver) (with AcuraLink), the XM receiver (with XM receiver), or the USB adapter unit is connected.

NO—Go to step 19.

19. Turn the ignition switch to LOCK (0).

20. Disconnect the HandsFreeLink control unit 28P connector.

21. Reconnect AcuraLink control unit connector A (32P) (with AcuraLink), XM receiver connector A (14P) (with XM receiver), or USB adapter unit connector A (14P).

22. Turn the ignition switch to ON (II).

23. Check the operation of the reconnected unit.

Is the system normal?

YES—Substitute a known-good HandsFreeLink control unit (see page 23-339), and recheck. If the symptom/indication goes away, replace the original HandsFreeLink control unit (see page 23-339). ■

NO—Substitute a known-good audio unit (see page 23-106), and recheck. If the symptom/indication goes away, replace the original audio unit (see page 23-106). ■

24. Turn the ignition switch to LOCK (0).

25. Disconnect the HandsFreeLink control unit 28P connector and audio unit connector C (14P).

26. Check for continuity between the HandsFreeLink control unit 28P connector and body ground according to the table.

	HandsFreeLink control unit connector	Wire color
AUDIO R+	No. 9	GRN
AUDIO R−	No. 23	BLK
AUDIO L+	No. 10	WHT
AUDIO L−	No. 24	RED

HANDSFREELINK CONTROL UNIT 28P CONNECTOR

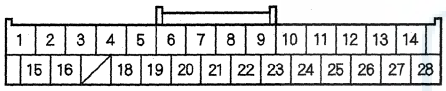

Wire side of female terminals

Is there continuity?

YES—There is a short in the wire(s) between the HandsFreeLink control unit 28P connector and body ground. Replace the affected shielded harness. ■

NO—Go to step 27.

27. Check for continuity between audio unit connector C (14P) and the HandsFreeLink control unit 28P connector according to the table.

	Audio unit connector	HandsFreeLink control unit connector	Wire color
AUDIO R+	C5	No. 9	GRN
AUDIO R−	C13	No. 23	BLK
AUDIO L+	C6	No. 10	WHT
AUDIO L−	C14	No. 24	RED

AUDIO UNIT CONNECTOR C (14P)

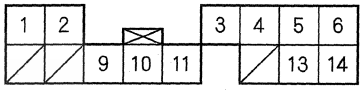

Wire side of female terminals

HANDSFREELINK CONTROL UNIT 28P CONNECTOR

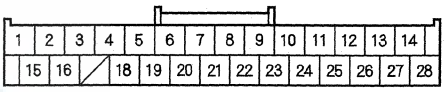

Wire side of female terminals

Is there continuity?

YES—Go to step 28.

NO—There is an open in the wire between the audio unit and the HandsFreeLink control unit. Replace the affected shielded harness. ■

(cont'd)

Symptom Troubleshooting (cont'd)

28. Check for continuity between the terminals of the HandsFreeLink control unit 28P connector according to the table.

From terminal	To terminals
No. 22 (GRY)	No. 9 (GRN), No. 23 (BLK), No. 10 (WHT), No. 24 (RED)

HANDSFREELINK CONTROL UNIT 28P CONNECTOR

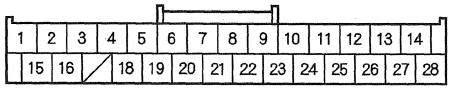

Wire side of female terminals

Is there continuity?

YES—There is a short in the wire(s) between the audio unit and the HandsFreeLink control unit. Replace the affected shielded harness. ■

NO—Substitute a known-good HandsFreeLink control unit (see page 23-339), and recheck. If the symptom/indication goes away, replace the original HandsFreeLink control unit (see page 23-339). ■

Bluetooth audio does not work

NOTE:
- Check the vehicle battery condition first (see page 22-90).
- Check the connectors for poor connections or loose terminals.
- Check if the audio device functions normally.
- Make sure the audio device is registered before troubleshooting. If the audio device can not be registered, see Bluetooth audio device can not be registered troubleshooting.

1. Turn the ignition switch to ON (II).

2. Turn on the audio unit, and press AUX button to select Bluetooth audio source.

   Does it change to Bluetooth Audio source?

   YES—Go to step 3.

   NO—Substitute a known-good audio unit (see page 23-106), and recheck. If the symptom/indication goes away, replace the original audio unit (see page 23-106).

3. Check if the Bluetooth audio device can be played.

   Does the Bluetooth audio play?

   YES—Intermittent failure. The audio unit is OK at this time. ■

   NO—Go to step 4.

4. Check online at www.acura.com/handsfreelink or call the HFL support desk at 888-528-7876 to make sure the cell phone is compatible with the HFL system and that there are no known issues.

5. If you have the client's phone, go to step **6**. Otherwise, pair a known-good cell phone to the client's vehicle.

   Can you pair the Bluetooth phone?

   YES—The client's Bluetooth phone is defective or not compatible. ■

   NO—Go to step 7.

6. Pair the client's phone to a known-good vehicle.

   Can you pair the Bluetooth phone?

   YES—Go to step 7.

   NO—The client's Bluetooth phone is defective or not compatible. ■

7. Connect the HDS to the DLC, and check for HFL DTCs.

   Are there any DTCs indicated?

   YES—Go to HFL DTC troubleshooting (see page 23-314). ■

   NO—Go to step 8.

8. Go into the Diagnostic mode, and use the System Links diagnosis (see page 23-164).

   Is the Display icon or Audio icon red?

   YES—Check for error code to the Error History (see page 23-126). ■

   NO—Go to step 9.

9. Turn the ignition switch to ON (II).

10. Disconnect the navigation display unit 20P connector and HandsFreeLink control unit 28P connector.

11. Check for continuity between the navigation display unit 20P connector and the HandsFreeLink control unit 28P connector according to the table.

HandsFreeLink control unit connector	Navigation display unit connector	Wire color
No. 4	No. 5	GRN
No. 5	No. 15	RED

HANDSFREELINK CONTROL UNIT 28P CONNECTOR

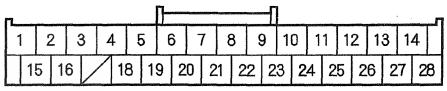

Wire side of female terminals

NAVIGATION DISPLAY UNIT 20P CONNECTOR

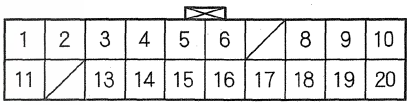

Wire side of female terminals

Is there continuity?

YES—Substitute a known-good HandsFreeLink control unit (see page 23-339), and recheck. If the symptom/indication goes away, replace the original HandsFreeLink control unit (see page 23-339). ■

NO—Repair short in the wire(s) between the HandsFreeLink control unit 28P connector and the navigation display unit. Replace the affected shield harness. ■

Symptom Troubleshooting (cont'd)

Bluetooth cell phone cannot be paired

NOTE:
- Check the vehicle battery condition first (see page 22-90).
- Check the connectors for poor connections or loose terminals.
- When six Bluetooth phones are paired, you must delete one phone before you can add another.

1. Turn the ignition switch to ON (II).
2. Press the HFL TALK button.

   Does the beep sound?

   YES—Go to step 3.

   NO—Go to step 5.
3. Check online at www.acura.com/handsfreelink or call the HFL support desk at 888-528-7876 to make sure the cell phone is compatible with the HFL system and that there are no known issues.
4. If you have the client's phone, go to step 5. Otherwise, pair a known-good cell phone to the client's vehicle.

   Can you pair the Bluetooth phone?

   YES—The client's Bluetooth phone is defective or not compatible. ■

   NO—Go to step 6.
5. Pair the client's phone to a known-good vehicle.

   Can you pair the Bluetooth phone?

   YES—Go to step 6.

   NO—The client's Bluetooth phone is defective or not compatible. ■
6. Connect the HDS to the DLC. Check for HFL DTCs.

   Is there any DTCs indicate?

   YES—Go to HFL DTC troubleshooting. ■

   NO—Go to symptom troubleshooting Voice control does not work/respond (see page 23-231) or HFL switch test (see page 23-337). ■

The communication with cell phone is interrupted or changes

NOTE:
- Check the vehicle battery condition first (see page 22-90).
- Check the connectors for poor connections or loose terminals.
- Check if the audio system functions normally.
- Do not put the Bluetooth phone in the trunk or in a metal briefcase as it may not function properly.
- Check online at www.acura.com/handsfreelink or call the HFL support desk at 888-528-7876 to make sure the cell phone is compatible with the HFL system and that there are no known issues.

1. Turn on the audio unit, and check for sound in each mode (AM, FM, XM, and CD).

   Does the symptom occur?

   YES—Substitute a known-good audio unit (see page 23-106), and recheck. If the symptom/indication goes away, replace the original audio unit (see page 23-106). ■

   NO—Go to step 2.

2. Duplicate the symptom with the Bluetooth phone.

   Does the symptom occur in a specific place or under an specific condition?

   YES—Operation is normal: Bluetooth audio is OK at this time. Influence or electric wave interference. ■

   NO—Go to step 3.

3. If you have the client's phone, go to step 4. Otherwise, pair a known-good cell phone to the client's vehicle.

   Can you pair the Bluetooth phone?

   YES—The client's Bluetooth phone is defective or not compatible. ■

   NO—Go to step 5.

4. Pair the client's phone to a known-good vehicle.

   Can you pair the Bluetooth phone?

   YES—Go to step 5.

   NO—The client's Bluetooth phone is defective or not compatible. ■

5. Check the connections at the HandsFreeLink control unit 28P connector terminals.

   Are the connections and terminals connected properly?

   YES—Go to step 6.

   NO—Repair the connection, and recheck. ■

(cont'd)

Symptom Troubleshooting (cont'd)

6. Turn the ignition switch to LOCK (0).

7. Disconnect the HandsFreeLink control unit 28P connector and audio unit connector C (14P).

8. Check for continuity between the HandsFreeLink control unit 28P connector and body ground according to the table.

	HandsFreeLink control unit connector	Wire color
AUDIO R+	No. 9	GRN
AUDIO R−	No. 23	BLK
AUDIO L+	No. 10	WHT
AUDIO L−	No. 24	RED

HANDSFREELINK CONTROL UNIT 28P CONNECTOR

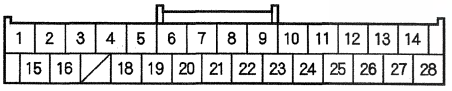

Wire side of female terminals

Is there continuity?

YES—There is a short in the wire(s) between the HandsFreeLink control unit 28P connector and body ground. Replace the affected shielded harness. ■

NO—Go to step 8.

9. Check for continuity between audio unit connector C (14P) and the HandsFreeLink control unit 28P connector according to the table.

	Audio unit connector	HandsFreeLink control unit connector	Wire color
AUDIO R+	C5	No. 9	GRN
AUDIO R−	C13	No. 23	BLK
AUDIO L+	C6	No. 10	WHT
AUDIO L−	C14	No. 24	RED

AUDIO UNIT CONNECTOR C (14P)

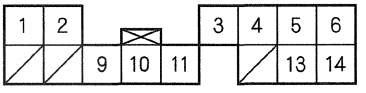

Wire side of female terminals

HANDSFREELINK CONTROL UNIT 28P CONNECTOR

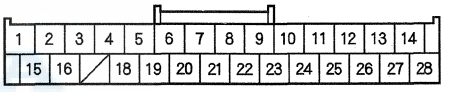

Wire side of female terminals

Is there continuity?

YES—Go to step 9.

NO—There is an open in the wire between the audio unit and the HandsFreeLink control unit. Replace the affected shielded harness. ■

10. Check for continuity between the terminals of the HandsFreeLink control unit 28P connector according to the table.

From terminal	To terminals
No. 22 (GRY)	No. 9 (GRN), No. 23 (BLK), No. 10 (WHT), No. 24 (RED)

HANDSFREELINK CONTROL UNIT 28P CONNECTOR

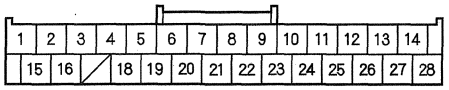

Wire side of female terminals

Is there continuity?

YES—There is a short in the wire(s) between the audio unit and the HandsFreeLink control unit. Replace the affected shield harness. ■

NO—Substitute a known-good HandsFreeLink control unit (see page 23-339), and recheck. If the symptom/indication goes away, replace the original HandsFreeLink control unit (see page 23-339). ■

Pairing instructions are not displayed on the screen

NOTE:
- Check the vehicle battery condition first (see page 22-90).
- Check the connectors for poor connections or loose terminals.
- Some mobile phones do not support the function.
- On sone phones, the connection guidance appears only when you pair the phone.
- Check online at www.acura.com/handsfreelink or call the HFL support desk at 888-528-7876 to make sure the cell phone is compatible with the HFL system and that there are no known issues.

1. Turn the ignition switch to ON (II).

2. Check if any modes (AM, FM, CD) other than Bluetooth audio is displayed.

   Do the other modes display normally?

   YES—Go to step 3.

   NO—Substitute a known-good audio unit (see page 23-106), and recheck. If the symptom/indication goes away, replace the original audio unit (see page 23-106). ■

3. Press DISC/AUX button to select Bluetooth Audio source.

   Does it change to Bluetooth Audio source?

   YES—Go to step 4.

   NO—Go to symptom troubleshooting for Bluetooth audio does not work (see page 23-330). ■

(cont'd)

Symptom Troubleshooting (cont'd)

4. Check if the audio system functions normally.

   Does the system function normally?

   YES—Go to step 5.

   NO—Go to symptom troubleshooting for No sound when Bluetooth audio does not work (see page 23-330). ■

5. If you have the client's phone, go to step 6. Otherwise, pair a known-good cell phone to the client's vehicle.

   Can you pair the Bluetooth phone?

   YES—The client's Bluetooth phone is defective or not compatible. ■

   NO—Substitute a known-good HandsFreeLink control unit (see page 23-339), and recheck. If the symptom/indication goes away, replace the original HandsFreeLink control unit (see page 23-339). ■

6. Pair the client's phone to a known-good vehicle.

   Can you pair the Bluetooth phone?

   YES—Substitute a known-good HandsFreeLink control unit (see page 23-339), and recheck. If the symptom/indication goes away, replace the original HandsFreeLink control unit (see page 23-339). ■

   NO—The client's Bluetooth phone is defective or not compatible. ■

Bluetooth cell phone audio function SKIP and PAUSE/RESUME do not work

NOTE:
- Check the vehicle battery condition first (see page 22-90).
- Check the connectors for poor connections or loose terminals.
- Check if the audio system functions normally.
- Check if the Bluetooth phone functioned normally when the Bluetooth phone was initially paired registration.
- Some mobile phones do not support the function.
- Check online at www.acura.com/handsfreelink or call the HFL support desk at 888-528-7876 to make sure the cell phone is compatible with the HFL system and that there are no known issues.

1. Turn the ignition switch to ON (II).

2. Turn on the audio unit, and check that MENU, SEEK/SKIP CATEGORY and DISP MODE button function normally with the audio unit.

   Is the audio unit operation OK?

   YES—Go to step 3.

   NO—Substitute a known-good audio unit (see page 23-106), and recheck. If the symptom/indication goes away, replace the original audio unit (see page 23-106). ■

3. Check that music plays with the Bluetooth phone.

   Is the system normal?

   YES—Go to step 4.

   NO—Go to symptom troubleshooting for No sound when Bluetooth audio does not work (see page 23-325). ■

4. If you have the client's phone, go to step 5. Otherwise, pair a known-good cell phone to the client's vehicle.

   Can you pair the Bluetooth phone?

   YES—The client's Bluetooth phone is defective or not compatible. ■

   NO—Substitute a known-good HandsFreeLink control unit (see page 23-339), and recheck. If the symptom/indication goes away, replace the original HandsFreeLink control unit (see page 23-339). ■

5. Pair the client's phone to a known-good vehicle.

   Can you pair the Bluetooth phone?

   YES—Substitute a known-good HandsFreeLink control unit (see page 23-339), and recheck. If the symptom/indication goes away, replace the original HandsFreeLink control unit (see page 23-339). ■

   NO—The client's Bluetooth phone is defective or not compatible. ■

HFL Switch Test/Replacement

1. Remove the driver's airbag (see page 24-197).
2. Disconnect the 6P connector (A).

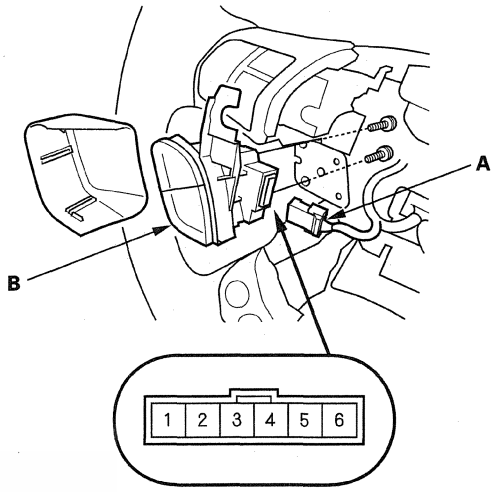

3. Remove the two screws and HFL switch (B).
4. Measure the resistance between the No. 2 and No. 5 terminals in each switch position according to the table.

HFL Switch

Position	Resistance
No button pressed	About 1 kΩ
HFL TALK button pressed	About 185 Ω
HFL BACK button pressed	About 45 Ω

5. Use a diode tester between the terminals in each switch position according to the table.

Terminal	3		4
	○	⊣◁	○

6. If the resistance is not as specified, replace the switch.

Control Unit Input Test

1. Remove the throttle actuator control module, adaptive cruise control (ACC) unit (see page 25-86) and the HandsFreeLink control unit (see page 23-339).
2. Disconnect the 28P connector (A) from the HandsFreeLink control unit (B).

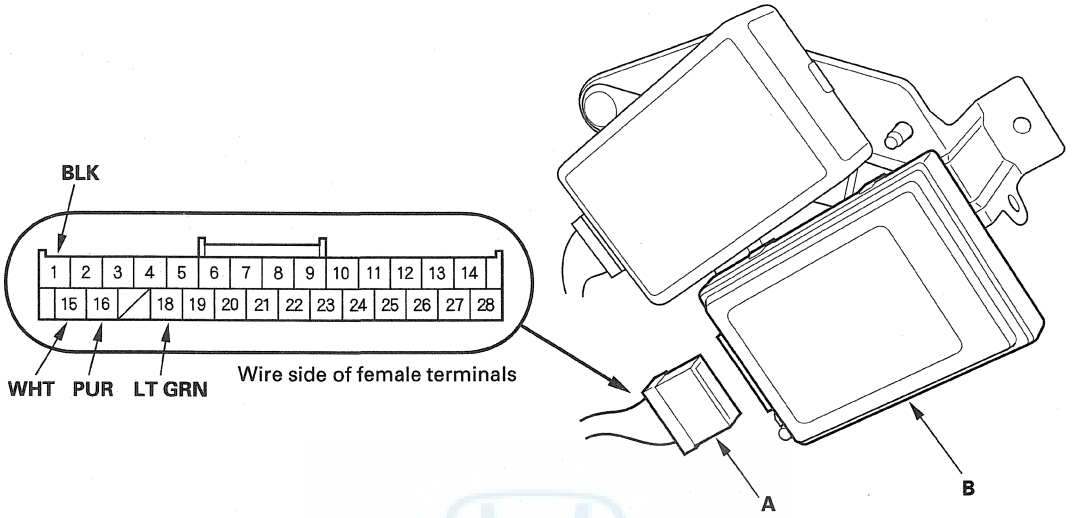

3. Inspect the connector and socket terminals for a good pinfit to be sure they are all making good contact.
   - If the terminals are bent, loose or corroded, repair them as necessary, and recheck the system.
   - If the terminals look OK, go to step 4.
4. Reconnect the connector, and make these input tests at the connector.
   - If any test indicates a problem, find and correct the cause, then recheck the system.
   - If all the input tests prove OK, go to step 5.

Cavity	Wire	Test condition	Test: Desired result	Possible cause if result is not obtained
1	BLK	Under all conditions	Measure the voltage to ground: There should be less than 0.1 V.	• Poor ground (G651) • An open in the wire
15	WHT	Under all conditions	Measure the voltage to ground: There should be battery voltage.	• Blown No. 5 (7.5 A) fuse in the driver's under-dash fuse/relay box • An open in the wire
16	PUR	Ignition switch ACC (I) or ON (II)	Measure the voltage to ground: There should be battery voltage.	• Blown No. 32 (10 A) fuse in the driver's under-dash fuse/relay box • An open in the wire

5. Disconnect the 28P connector again, and make this input test at the connector.
   - If the test indicates a problem, find and correct the cause, then recheck the system.
   - If the input test proves OK, the HandsFreeLink control unit must be faulty, replace it.

Cavity	Wire	Test condition	Test: Desired result	Possible cause if result is not obtained
18	LT GRN	Under all conditions	Check for continuity between terminal No. 18 and the driver's under-dash fuse/relay box connector X (39P) terminal No. 27: There should be continuity.	An open in the wire
		Driver's under-dash fuse/relay box connector X (39P) disconnected	Check for continuity to ground: There should be no continuity.	Short to ground

HFL-Navigation Microphone Removal/Installation

NOTE:
- Put on gloves to protect your hands.
- Take care not to scratch the dashboard and related parts.
- Lay a workshop towel under the parts when working on them to protect the face panel from scratches or other damage.

1. Remove the roof console (see page 22-307).

2. Disconnect the connector (A) from the HFL-navigation microphone (B). Remove the mounting screws from the roof console (C).

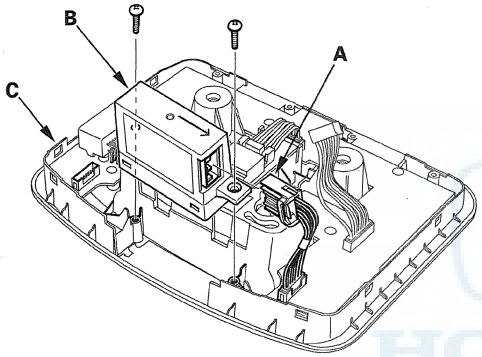

3. Install the microphone in the reverse order of removal.

HandsFreeLink Control Unit Removal/Installation

NOTE: Tell the client they need to write down all phone numbers as there is no way to transfer the information in the original HandsFreeLink control unit to a new HandsFreeLink control unit.

1. Remove the glove box (see page 20-103).

2. Remove the passenger's under-dash fuse/relay box (see page 22-89).

3. Remove the bolts (A) from the bracket that holds the HandsFreeLink control unit (B), the throttle actuator control module, and the ACC unit.

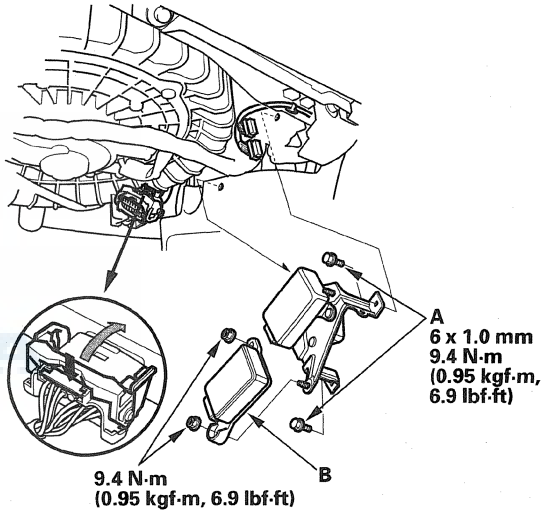

4. Disconnect the connectors from the HandsFreeLink control unit.

5. Remove the HandsFreeLink control unit from the bracket.

6. Install the HandsFreeLink control unit in the reverse order of removal.

Restraints

Restraints
Special Tools 24-2

Seat Belts
Component Location Index 24-3
Front Seat Belt Replacement 24-4
Rear Seat Belt Replacement 24-8
Inspection 24-10

SRS (Supplemental Restraint System)
Component Location Index 24-12
Precautions and Procedures 24-14
General Troubleshooting Information 24-23
ODS Unit Initialization 24-26
ODS Unit Operation Check 24-28
Front Passenger's Weight Sensor Output Check After a Vehicle Collision 24-29
Driver's Seat Position Sensor Operation Check 24-30
E-Pretensioner Operation Check 24-31
DTC Troubleshooting Index 24-32
Symptom Troubleshooting Index 24-36
System Description 24-37
Circuit Diagram 24-46
DTC Troubleshooting 24-50
Symptom Troubleshooting 24-189
Component Replacement/Inspection After Deployment 24-194
Driver's Airbag Replacement 24-197
Front Passenger's Airbag Replacement 24-198
Side Airbag Replacement 24-202
Side Curtain Airbag Replacement 24-204
Airbag and Tensioner Disposal 24-208
Cable Reel Replacement 24-212
SRS Unit Replacement 24-215
Side Impact Sensor (First) Replacement 24-216
Side Impact Sensor (Second) Replacement 24-217
Rear Safing Sensor Replacement 24-218
Front Passenger's Weight Sensor Replacement 24-219
ODS Unit Replacement 24-220
E-pretensioner Unit Replacement 24-221
Front Impact Sensor Replacement 24-222
Driver's Seat Position Sensor Replacement 24-223
Passenger's Airbag Cutoff Indicator Illumination Bulb Test 24-224



Special Tools

Ref. No.	Tool Number	Description	Qty
①	07HAZ-SG00500	Deployment Tool	1
②	07PAZ-001010A	SCS Service Connector	1
③	07SAZ-TB4011A	SRS Inflator Simulator	1
④	07TAZ-001020A	Backprobe Adapter, 17 mm	2
⑤	07XAZ-S1A0200	SRS Simulator Lead E	1
⑥	07XAZ-SZ30100	SRS Simulator Lead F	1
⑦	07YAZ-S3AA100	SRS Simulator Lead H	1
⑧	070AZ-SNAA300	SRS Simulator Lead L	1
⑨	070AZ-SAA0100	SRS Short Canceller	2

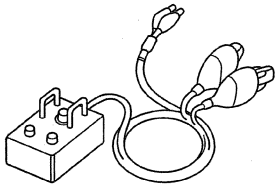

①

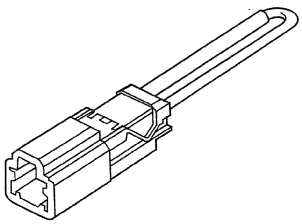

②

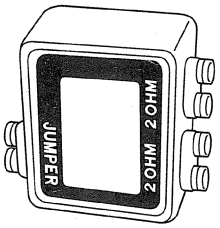

③

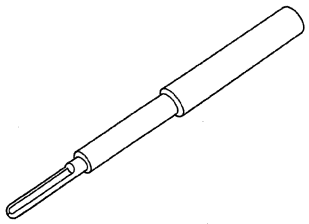

④

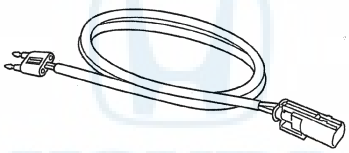

⑤

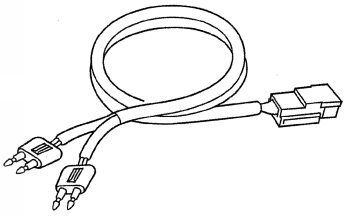

⑥

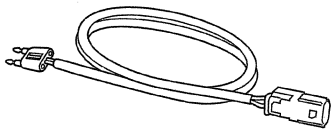

⑦

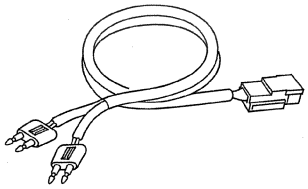

⑧



⑨

Component Location Index

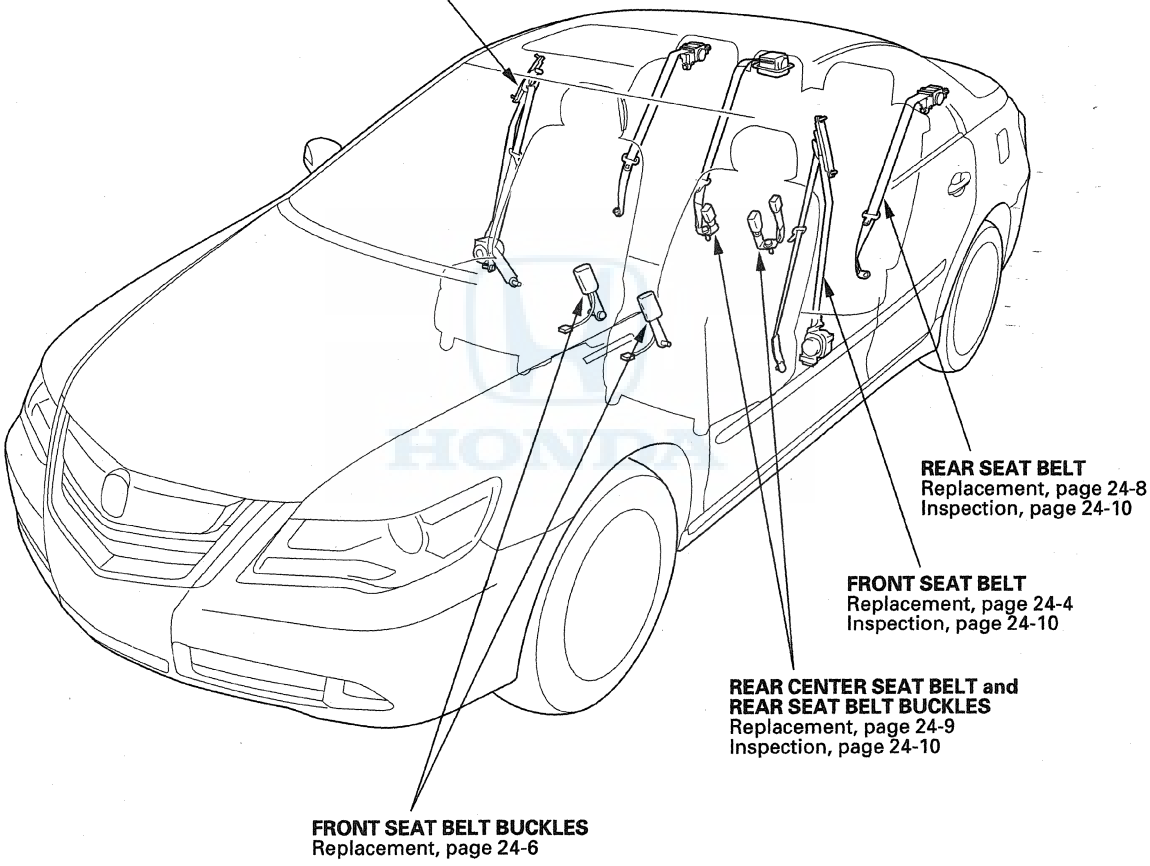

Front Seat Belt Replacement

SRS components are located in this area. Review the SRS component locations (see page 24-12), and the precautions and procedures (see page 24-14) before doing repairs or service.

NOTE:
- Check the front seat belts for damage (see page 24-10), and replace them if necessary.
- If replaceing the front seat belt after deployment, refer to Component Replacement/Inspection After Deployment (see page 24-194) for a complete list of other parts that must also be replaced.

Front Seat Belt

1. Slide the front seat forward fully, and remove the anchor cover (A).

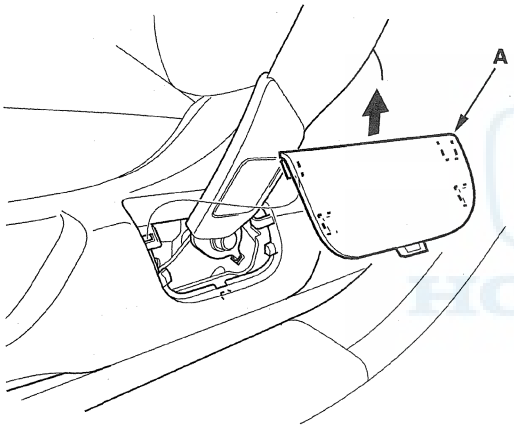

2. Remove the lower anchor bolt (A).

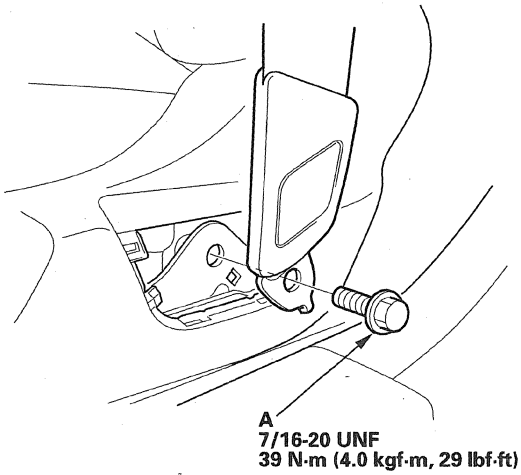

3. Do the battery terminal disconnection procedure (see page 22-91), and wait at least 3 minutes before beginning work.

4. Remove the B-pillar lower trim (see page 20-72).

5. Remove the B-pillar upper trim and slider (see page 20-74).

6. Remove the upper anchor bolt (A).



7. Disconnect the seat belt tensioner connector (A), seat belt tensioner reducer connector (B), and E-pretensioner motor connector (C) (some models). Remove the upper retractor mounting bolt (D) and the lower retractor bolt (E), then remove the front seat belt (F) and retractor (G).

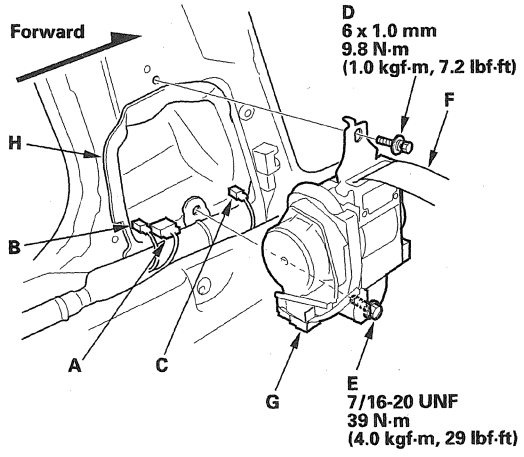

8. If necessary, remove the front seat belt protector (H).

9. Remove the shoulder anchor adjuster (A).

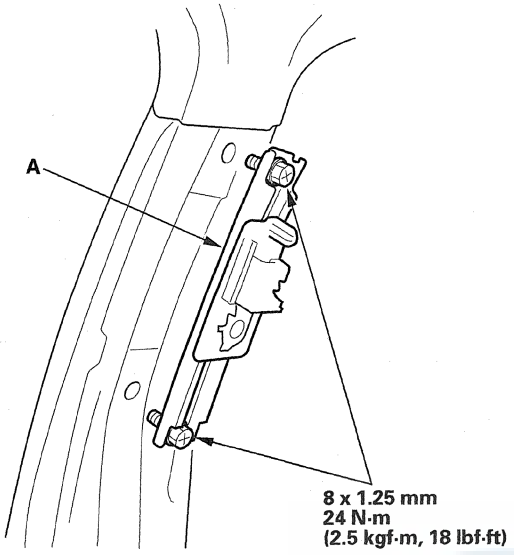

10. Install the seat belt in the reverse order of removal, and note these items:

- Apply liquid thread lock to the upper anchor bolt before reinstallation.
- Tighten the bolts by hand first, then tighten to specification with a torque wrench.
- Check that the retractor locking mechanism functions as described (see page 24-10).
- Assemble the washer and bushing on the upper anchor bolt as shown.
- If the seat belt tensioner has been deployed, replace the front seat belt protector with a new one.
- Before installing the anchor bolts, make sure there are no twists or kinks in the seat belt.
- Make sure the seat belt tensioner and tension reducer connectors are properly plugged in.
- Do the battery terminal reconnection procedure (see page 22-91).
- Check for any DTCs that may have been set during repair and clear them.

Upper anchor bolt installation

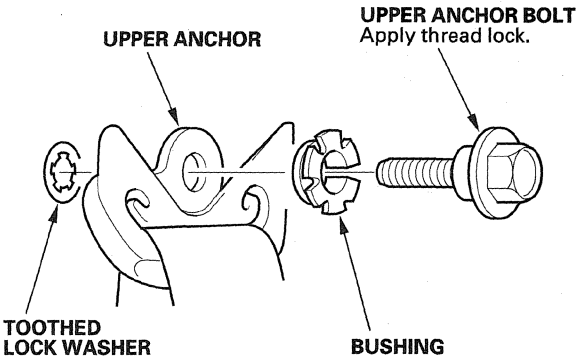

(cont'd)

Front Seat Belt Replacement (cont'd)

Seat Belt Buckle

1. Do the battery terminal disconnection procedure (see page 22-91), and wait at least 3 minutes before beginning work.
2. Remove the front seat (see page 20-114).
3. Remove the center cover (see page 20-133).
4. Detach the cloth (A) of the seat cushion cover from the connecting rod (B), then detach the harness clips (C).

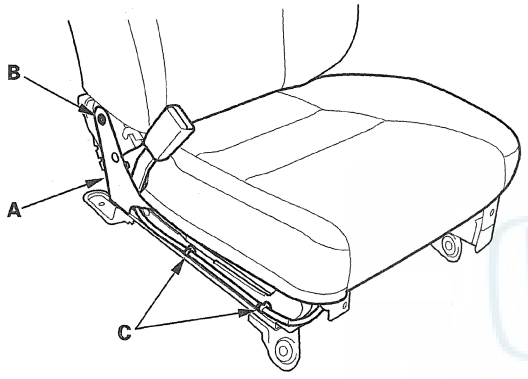

5. Disconnect the seat belt buckle switch connector (A).

Driver's seat

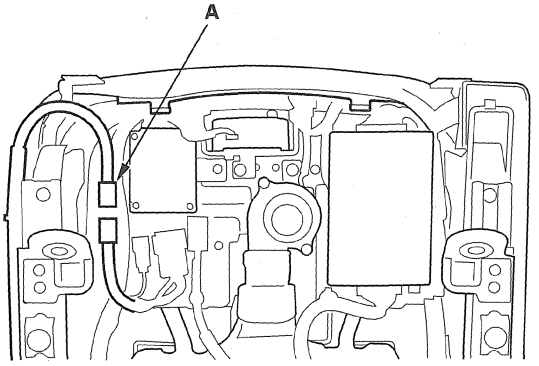

Passenger's seat

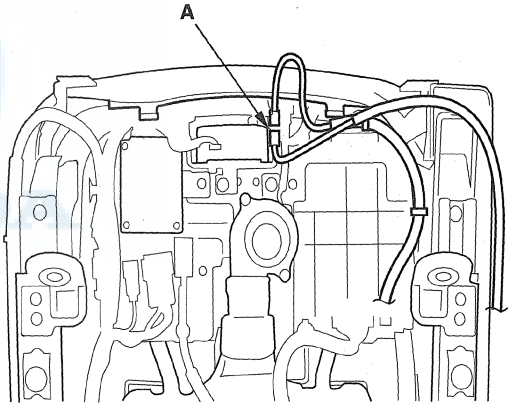

6. Remove the seat cushion cover (A).

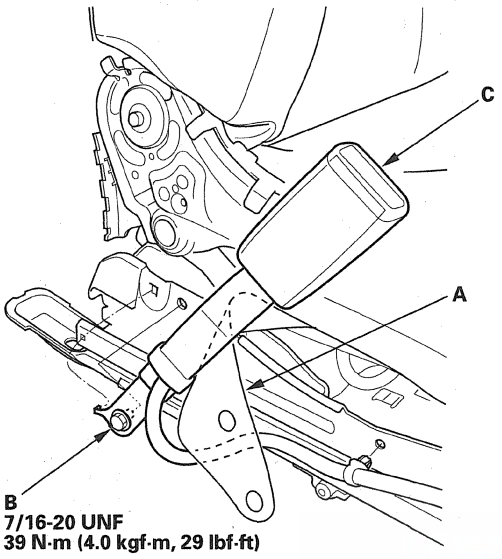

7. Remove the center anchor bolt (B), then remove the seat belt buckle (C).

8. Install the buckle in the reverse order of removal, and note these items:

- Assemble the washers on the center anchor bolt as shown.
- Apply liquid thread lock to the center anchor bolt before reinstallation.
- Tighten the bolts by hand first, then tighten to specification with a torque wrench.
- Make sure the seat belt buckle switch connector is plugged in properly.
- Do the battery terminal reconnection procedure (see page 22-91).
- Check for any DTCs that may have been set during repairs, and clear them.

Center anchor bolt installation

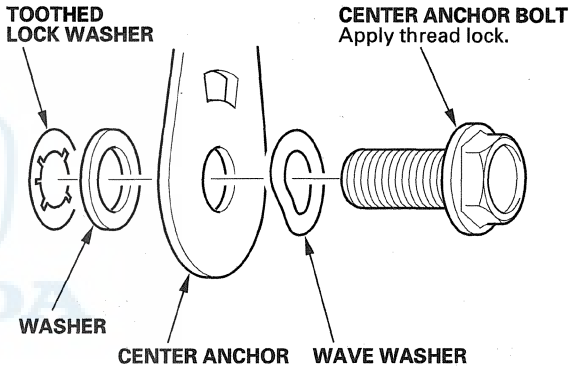

Rear Seat Belt Replacement

NOTE: Check the rear seat belts for damage, and replace them if necessary.

Rear Seat Belt

1. Remove the rear seat cushion (see page 20-140).
2. Remove the lower anchor bolt (A).

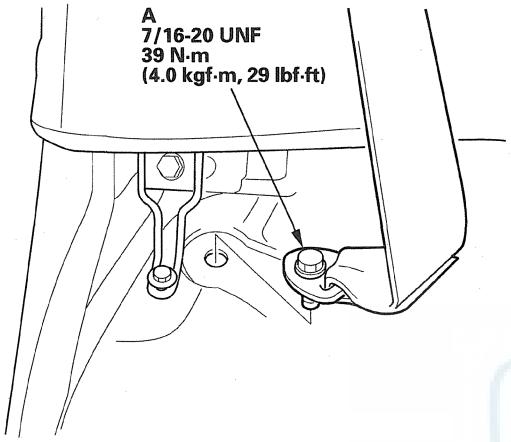

3. Remove the rear seat-back (see page 20-140).
4. Remove the C-pillar trim from both sides (see page 20-76).
5. Remove the rear shelf (see page 20-80).
6. Remove the retractor mounting ET screw (A) and the retractor bolt (B), then remove the rear seat belt (C) and retractor (D).

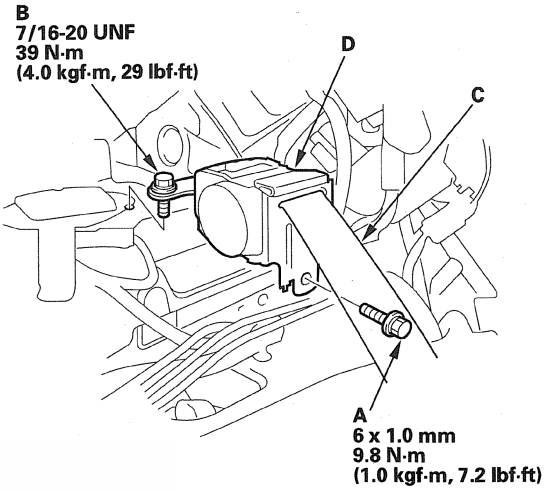

7. Install the seat belt in the reverse order of removal, and note these items:
   - Apply liquid thread lock to the anchor bolts before reinstallation.
   - Check that the retractor locking mechanism functions as described (see page 24-10).
   - Before installing the anchor bolt, make sure there are no twists or kinks in the seat belt.

Center Seat Belt and Seat Belt Buckles

1. Remove the rear seat cushion (see page 20-140).

2. Remove the center anchor bolts (A), then remove the seat belt buckles (B) and center seat belt buckle (C).

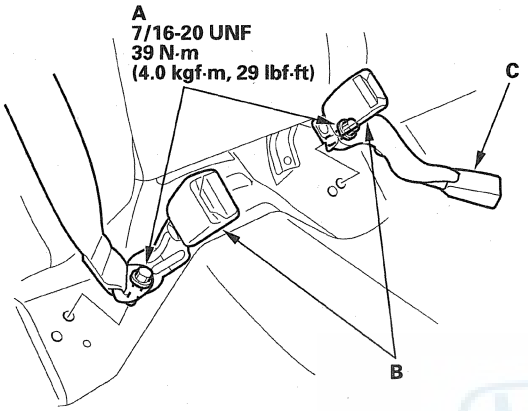

3. Release the lock washer (A), then remove the anchor bolt (B), spring washer (C), center seat belt (retractor anchor) (D), or center seat belt buckle (buckle anchor), and seat belt buckle (E).

   NOTE: The retractor anchor is shown; the center seat belt buckle anchor is similar.

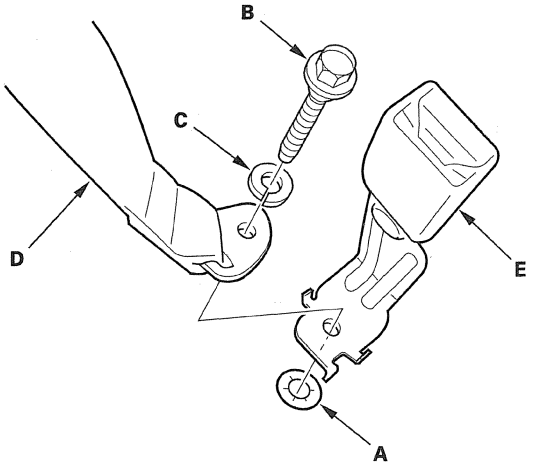

4. Remove the rear seat-back (see page 20-140).

5. Remove the C-pillar trim from both sides (see page 20-76).

6. Remove the rear shelf (see page 20-80).

7. Remove the retractor mounting ET screw (A) and the retractor bolt (B), then remove the rear seat belt (C) and retractor (D).

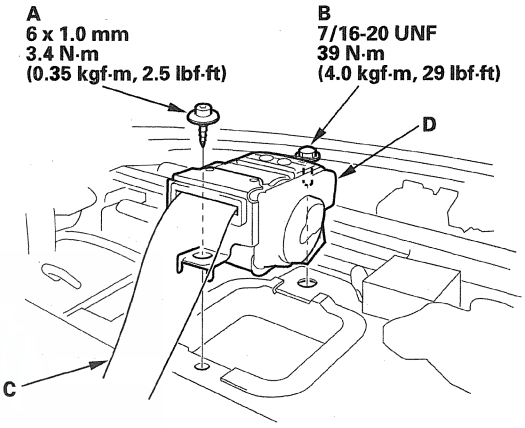

(cont'd)

Rear Seat Belt Replacement (cont'd)

8. Remove the rear center seat belt protector (A).

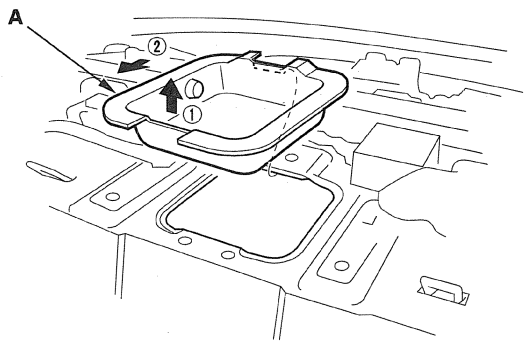

9. Install the seat belt and buckles in the reverse order of removal, and note these items:

- Apply liquid thread lock to the anchor bolts before reinstallation.
- Tighten the bolts by hand first, then tighten to specification with a torque wrench.
- Check that the retractor locking mechanism functions as described (see page 24-10).
- Assemble the washers on the retractor bolt as shown.
- Before installing the center anchor bolt, make sure there are no twists or kinks in the center seat belt.
- Make sure the rear center emergency locking retractor (ELR) is pointing straight forward.

Retractor bolt installation

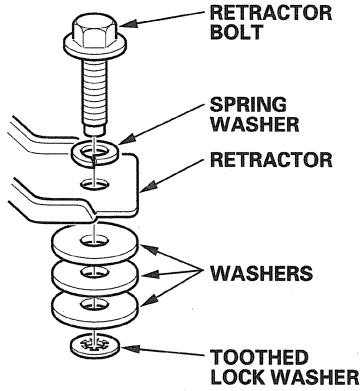

Inspection

Out of Vehicle

For front seat belt retractor with seat belt tensioner, review the SRS component locations (see page 24-12), and the precautions and procedures (see page 24-14) before doing repairs or service.

Retractor

1. Before installing the retractor, check that the seat belt can be pulled out freely.

2. Make sure that the seat belt does not lock when the retractor (A) is leaned slowly up to 15 ° from the mounted position. The seat belt should lock when the retractor is leaned over 40 °. Do not attempt to disassemble the retractor.

Front

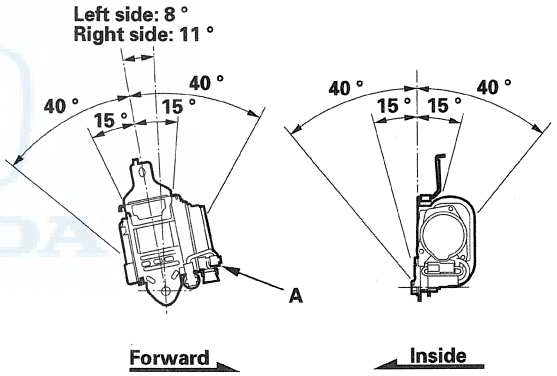

Rear

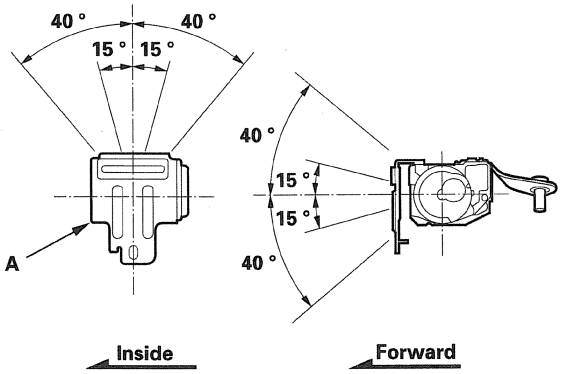

Rear center

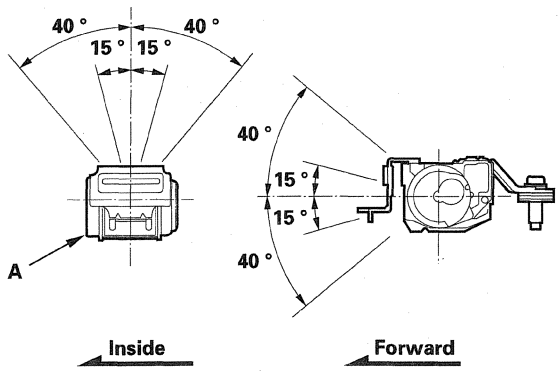

3. Replace the seat belt with a new assembly if it does not function properly. Do not disassemble any part of the seat belt for any reason.

In-vehicle

1. Check that the seat belt is not twisted or caught on anything.

2. After installing the anchors, check for free movement on the anchor bolts. If necessary, remove the anchor bolts and check that the washers and other parts are not damaged or improperly installed.

3. Check the seat belts for damage or discoloration. Clean with a shop towel if necessary. Use only soap and water to clean the seat belt.

   NOTE: Dirt buildup in the metal loops of the upper anchors can cause the seat belts to retract slowly. Wipe the inside of the loops with a clean cloth dampened in isopropyl alcohol.

4. Check that the seat belt does not lock when pulled out slowly. The seat belt is designed to lock only during a sudden stop or impact.

5. Make sure that the seat belt will retract automatically when released.

6. For front passenger's seat belt and all rear seat belts, check the seat belt retractor locking mechanism automatic locking retractor (ALR). This function is for securing child seats.

   -1 Pull the seat belt all the way out to engage the ALR. The seat belt should retract with a soft, ratcheting sound, but not extend. This is normal.
   -2 To disengage the ALR, release the seat belt and allow it to fully retract, then pull the seat belt out part-way. The seat belt should retract and extend normally.

7. Replace the seat belt with a new assembly if it does not function properly. Do not disassemble any part of the seat belt for any reason.

Component Location Index

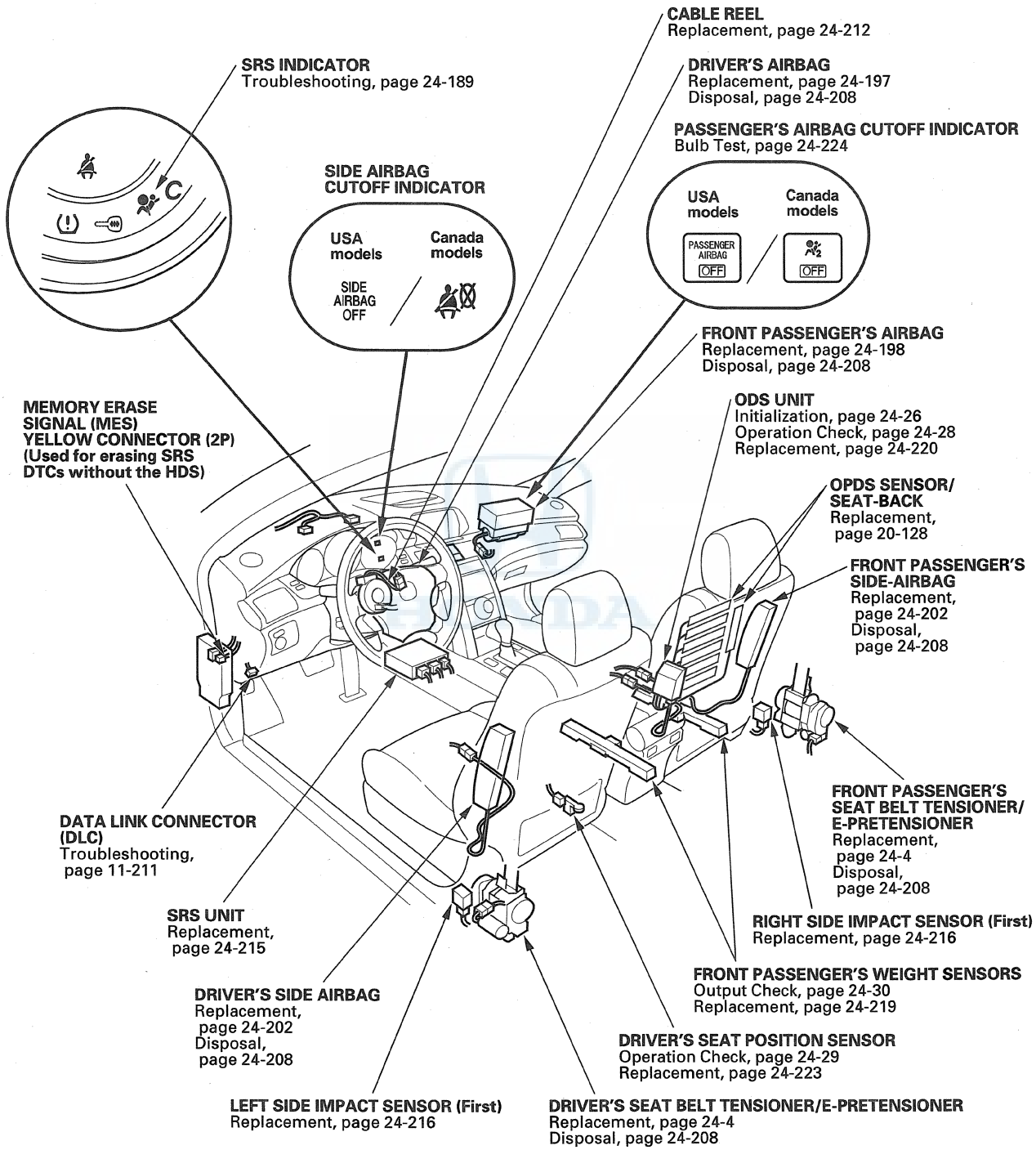

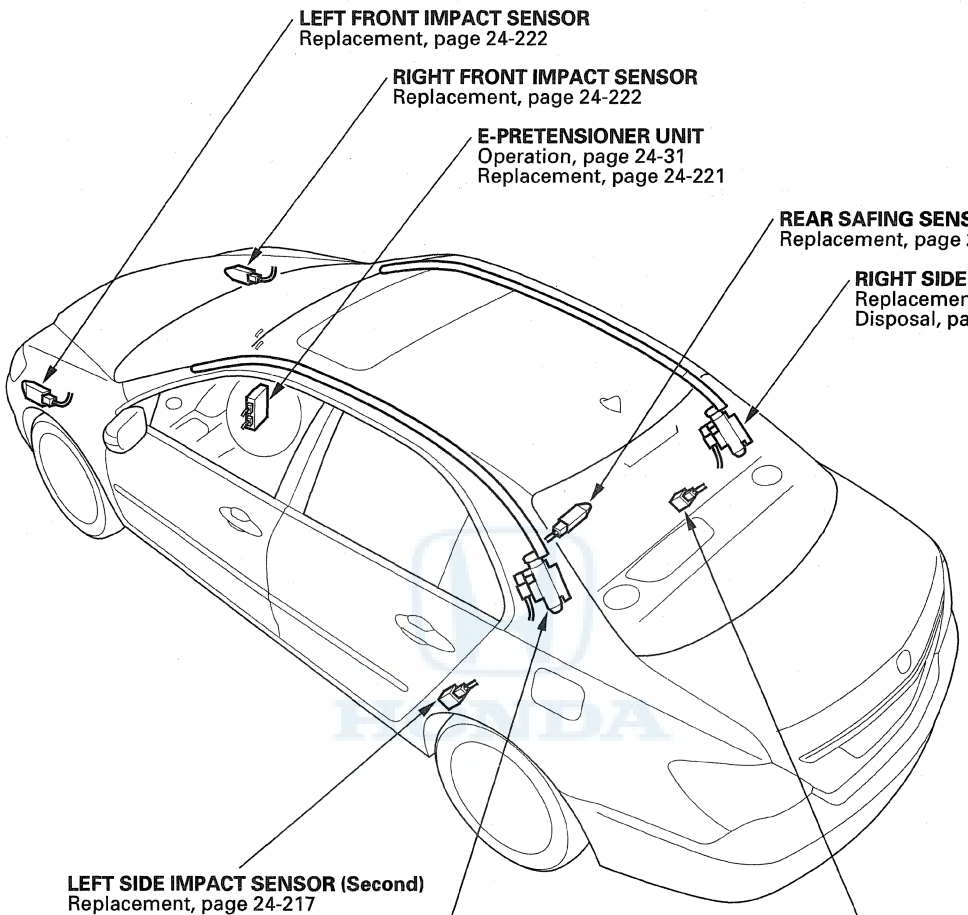
LEFT FRONT IMPACT SENSOR
Replacement, page 24-222
RIGHT FRONT IMPACT SENSOR
Replacement, page 24-222
E-PRETENSIONER UNIT
Operation, page 24-31
Replacement, page 24-221
REAR SAFING SENSOR
Replacement, page 24-218
RIGHT SIDE CURTAIN AIRBAG
Replacement, page 24-204
Disposal, page 24-208
LEFT SIDE IMPACT SENSOR (Second)
Replacement, page 24-217
LEFT SIDE CURTAIN AIRBAG
Replacement, page 24-204
Disposal, page 24-208
RIGHT SIDE IMPACT SENSOR (Second)
Replacement, page 24-217

Precautions and Procedures

General Precautions

NOTE: Some systems store data in memory that is lost when the battery is disconnected. Before disconnecting the battery, refer to Battery Terminal Disconnection and Reconnection (see page 22-91).

Please read the following precautions carefully before servicing the airbag system. Observe the instructions described in this manual, or the airbags could accidentally deploy and cause damage or injuries.

- Except when doing electrical inspections, always turn the ignition switch to LOCK (0), ground the SCS line with the HDS to take the PCM out of active status, disconnect the negative cable from the battery, then wait for 3 minutes before starting work.

  NOTE: The SRS memory is not cleared even if the ignition switch is turned to LOCK (0) or the battery cables are disconnected from the battery.

- Use replacement parts which are manufactured to the same standards and quality as the original parts. Do not install used SRS parts. Use only new parts when making SRS repairs.

- Carefully inspect any SRS part before you install it. Do not install any part that shows signs of being dropped or improperly handled, such as dents, cracks or deformation.

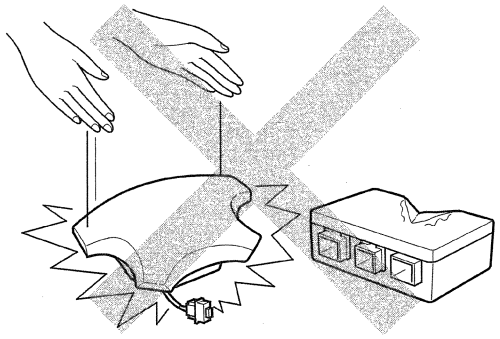

- Before disconnecting the SRS unit connectors, always disconnect the appropriate SRS parts connectors.

- Use only a digital multimeter to check the system. If it is not a Honda multimeter, make sure its output is 10 mA (0.01 A) or less when switched to the lowest value in the ohmmeter range. A tester with a higher output could cause accidental deployment and possible injury.

- Do not put objects on the front passenger's airbag.

Steering-related Precautions

Cable Reel Alignment

- Misalignment of the cable reel could cause an open in the wiring, making the SRS system, remote steering wheel controls, and the horn inoperative. Center the cable reel whenever you do the following (see step 6 on page 24-214).
  – Installation of the steering wheel
  – Installation of the cable reel
  – Installation of the steering column
  – Other steering-related adjustment or installation

- Do not disassemble the cable reel.

- Do not apply grease to the cable reel.

- If the cable reel shows any signs of damage, replace it with a new one. For example, if the cable reel does not rotate smoothly, replace it.

Airbag Handling and Storage

Do not disassemble an airbag. It has no serviceable parts. Once an airbag has been deployed, it cannot be repaired or reused.
For temporary storage of the airbag during service, please observe the following precautions.

- Store the removed airbag with the pad surface up. Never put anything on the airbag.

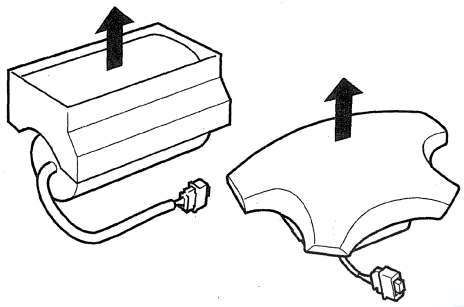

- To prevent damage to the airbag, keep it away from any oil, grease, detergent, or water.

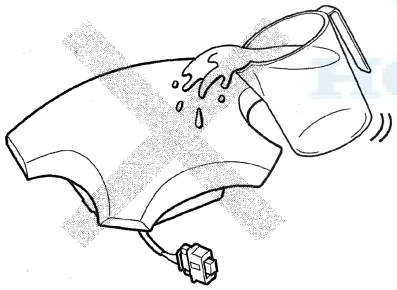

- Store the removed airbag on a secure, flat surface away from any high heat source (exceeding 200 °F/ 93 °C).

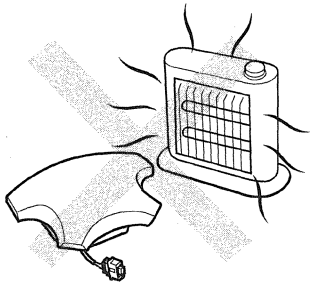

- Never do electrical tests on the airbags, such as measuring resistance.

- Do not position yourself in front of the airbag during removal, inspection, or replacement.

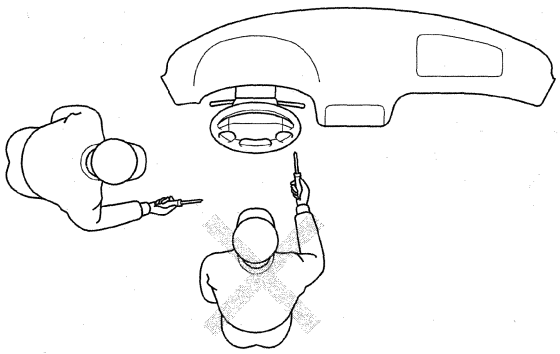

- For proper disposal of a damaged airbag, refer to airbag disposal (see page 24-208).

- The side curtain airbag module assembly is a long, jointed part containing an inflator (A), a flexible bag (B), an adapter pipe (C), and a center bracket (D). When removing or installing the side curtain airbag assembly, never:
  - Handle the flexible bag.
  - Drop the airbag assembly.
  - Cut, tear, or unwrap the tape strips.

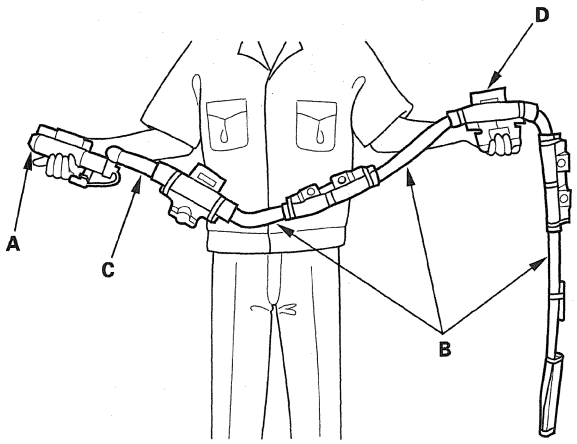

(cont'd)

Precautions and Procedures (cont'd)

SRS Unit, Front and Side Impact Sensors, Driver's Seat Position Sensor, Front Passenger's Weight Sensors, and Rear Safing Sensor

NOTE: Some systems store data in memory that is lost when the battery is disconnected. Before disconnecting the battery, refer to Battery Terminal Disconnection and Reconnection (see page 22-91).

- Turn the ignition switch to LOCK (0), disconnect the negative cable from the battery, and wait at least 3 minutes before starting installation or replacement of the SRS unit or disconnecting the connectors from the SRS unit.
- Be careful not to bump or impact the SRS unit, the front impact sensors, the rear safing sensor, or the side impact sensors when the ignition switch is in ON (II), or for at least 3 minutes after the ignition switch is turned to LOCK (0).
- During installation or replacement, be careful not to bump (by impact wrench, hammer, etc.) the area around the SRS unit, the front impact sensors, the rear safing sensor, or the side impact sensors. The airbags could accidentally deploy and cause damage or injury.

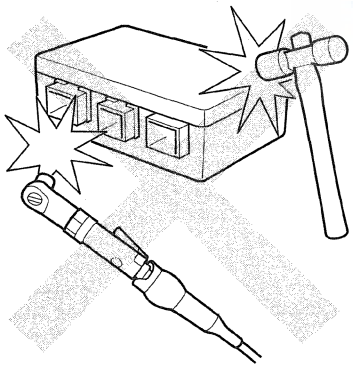

- After a collision where the front airbag, the side airbag, the side curtain airbag, or the seat belt tensioner deployed, go to Component Replacement/ Inspection after Deployment (see page 24-194). After a collision where airbags did not deploy, inspect for any damage or any deformation on the SRS unit, the front impact sensors, the rear safing sensor, and the side impact sensors. Also, do the front seat active head restraint inspection (see page 20-113). Replace all damaged parts.

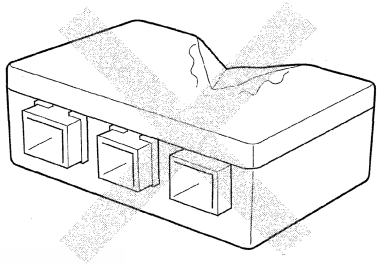

- Do not disassemble the SRS unit, the front impact sensors, the side impact sensors, the driver's seat position sensor, the rear safing sensor, and the front passenger's weight sensors.
- Alway install the SRS unit, front impact sensors, the rear safing sensor, and the side impact sensors with new TORX bolts torqued to 9.8 N·m (1.0 kgf·m, 7.2 lbf·ft).
- Do not spill water or oil on the SRS unit or any of the sensors.

Wiring Precautions

Some of the SRS wiring can be identified by special yellow outer covering, and the SRS connectors can be identified by their yellow color. Observe the following instructions.

- Never attempt to modify, splice, or repair SRS wiring. If there is an open or damage in SRS wiring or terminals, replace the harness.

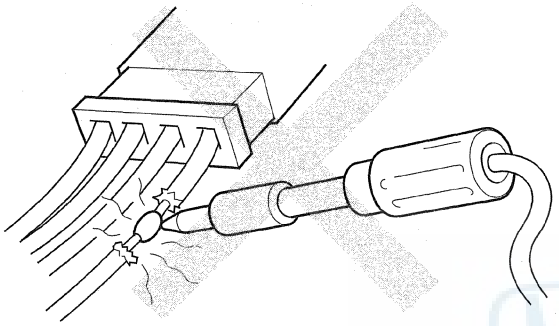

- Be sure to install the harness wires so they do not get pinched or interfere with other parts.

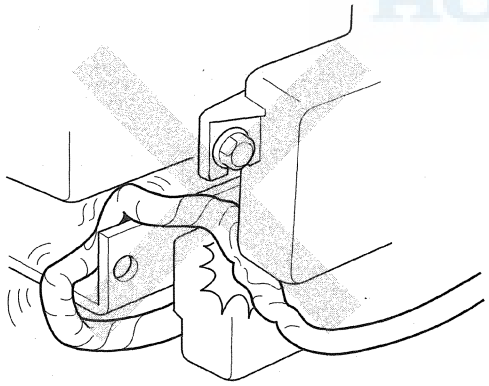

- Make sure all SRS ground locations are clean and grounds are securely fastened for optimum metal-to-metal contact. Poor grounds can cause intermittent problems that are difficult to diagnose.

- Do not use any silicone based cleaners or lubricants on any SRS connectors or terminals.

Precautions for Electrical Inspections

- Make sure the battery is fully charged when doing electrical test. If the battery is not fully charged, the results of the tests may not be accurate.
- When using electrical test equipment, insert the probe of the tester into the wire side of the connector (except water proof connector). Do not insert the probe of the tester into the terminal side of the connector, and do not tamper with the connector.

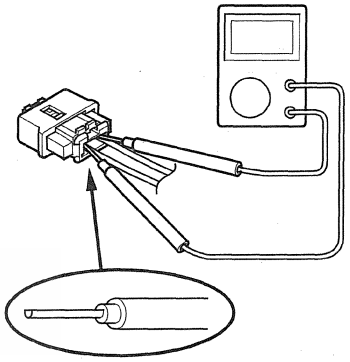

- Use back probe adapter 07TAZ-001020A. Do not insert the probe forcibly.

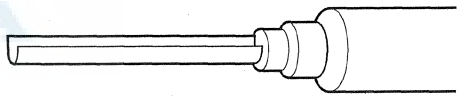

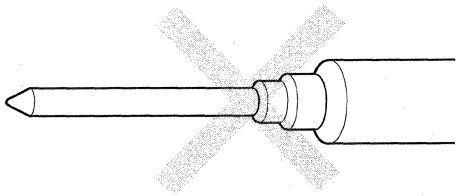

- Use specified service connectors in troubleshooting. Using improper tools could cause a diagnostic error due to poor metal-to-metal contact.

(cont'd)

Precautions and Procedures (cont'd)

Spring-loaded Lock Connector

Some SRS connectors have a spring-loaded lock.

Front Airbag Connectors

Disconnecting
To release the lock, pull the spring-loaded sleeve (A) toward the stop (B) while holding the opposite half of the connector. Then pull the connector halves apart. Be sure to pull on the sleeve and not on the connector.

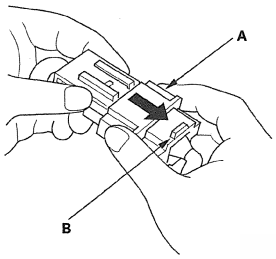

Connecting

1. To reconnect, hold the pawl-side connector, and press on the back of the sleeve-side connector in the direction shown. As the two connector halves are pressed together, the sleeve (A) is pushed back by the pawl (B). Do not touch the sleeve.

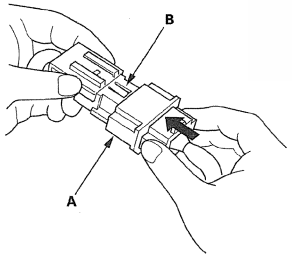

2. When the connector halves are completely connected, the pawl is released, and the spring-loaded sleeve locks the connector.

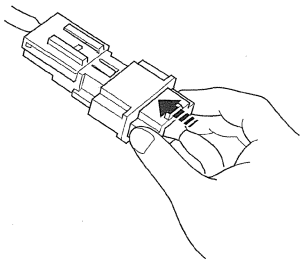

Side Airbag Connector

Disconnecting
To release the lock, pull the spring-loaded sleeve (A) toward the stop (B) while holding the opposite half of the connector. Then pull the connector halves apart. Be sure to pull on the sleeve and not on the connector half.

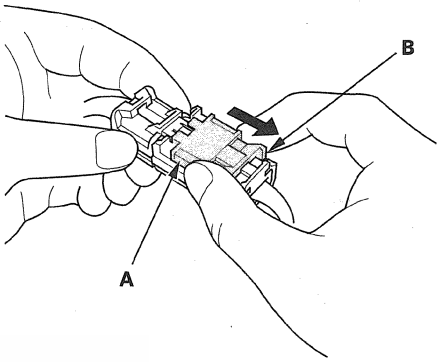

Connecting
Hold both connector halves and press them firmly together until the projection (C) of the sleeve-side connector clicks.

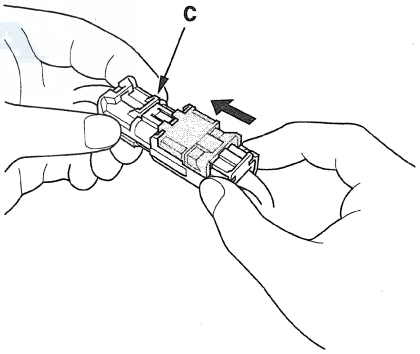

Opening the SRS Unit Shorting Connectors For Diagnosis

Special Tools Required
SRS Short Canceller 070AZ-SAA0100

NOTE:
- To prevent damage to the connector cavity, insert the SRS short canceller straight into the cavity from the terminal side.
- Before installing the short canceller, wash it with electrical contact cleaner, then dry it with compressed air.
- Do not use the short canceller if it is damaged.
- Make sure to remove the short canceller before reconnecting the SRS unit connector.
- Some systems store data in memory that is lost when the battery is disconnected. Before disconnecting the battery, refer to Battery Terminal Disconnection and Reconnection (see page 22-91).

When SRS unit connectors A (28P) or C (28P) are disconnected, a short circuit is automatically created in the connector to prevent accidental deployment of the airbag. The circuit may need to be opened when diagnosis is done on the circuit. Insert a short canceller (No. 070AZ-SAA0100) in the specified cavities when necessary to keep the circuit open for diagnosis.

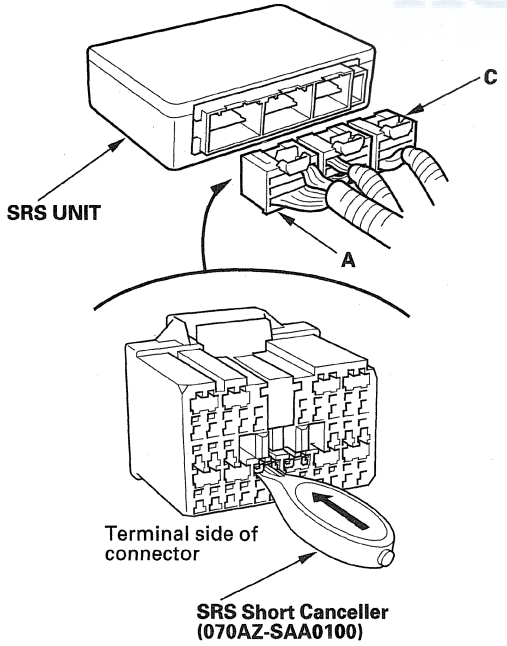

Terminal numbers are shown from the wire side of the female terminals. Insert the short canceller(s) into the cavities on the terminal side of the connector.

SRS UNIT CONNECTOR A (28P)

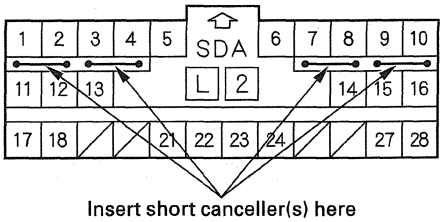

Insert short canceller(s) here

Wire side of female terminals

SRS UNIT CONNECTOR C (28P)

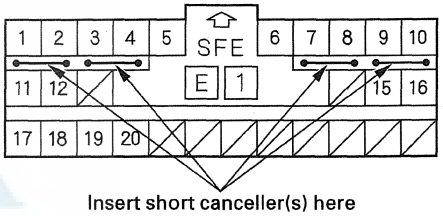

Insert short canceller(s) here

Wire side of female terminals

(cont'd)

Precautions and Procedures (cont'd)

Backprobing Spring-loaded Lock Connectors

When checking voltage or resistance on this type of connector the first time, you must remove the retainer (A) to insert the tester probe from the wire side.

NOTE: It is not necessary to reinstall the removed retainer; the terminals will stay locked in the connector housing.

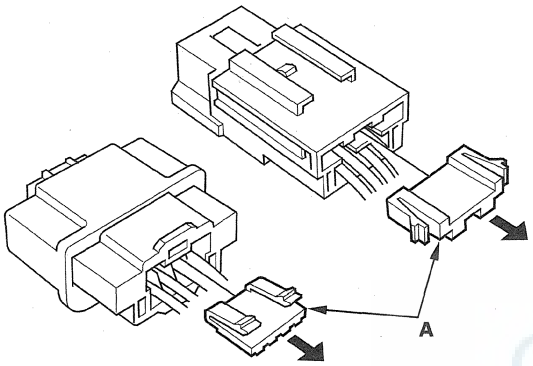

To remove the retainer (A), insert a flat-tip screwdriver (B) between the connector body and the retainer, then carefully pry out the retainer. Take care not to break the connector.

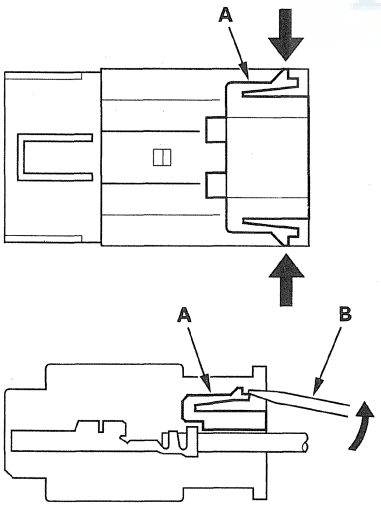

Seats with Side Airbags

Seats with side airbags have a "SIDE AIRBAG" label on the seat-back.



- Clean the seats with a damp cloth. Do not soak the seat with liquid. Do not spray steam on the seat.
- Do not repair a torn or frayed seat-back cover. Replace the seat-back cover if it is damaged.
- After a collision where the side airbag was deployed, replace the seat-back cover and side airbag with new parts. If the seat-back cushion is split, it must be replaced. If the seat-back frame is deformed, it must be replaced.
- Never put aftermarket accessories on the seat (covers, pads, seat heaters, lights, etc.).

Disconnecting System Connectors

1. Turn the ignition switch to LOCK (0).

2. Disconnect the negative cable from the battery, then wait at least 3 minutes.

Driver's Airbag

3. Remove the access panel (A) from the steering wheel, then disconnect the driver's airbag 4P connector (B) from the cable reel.

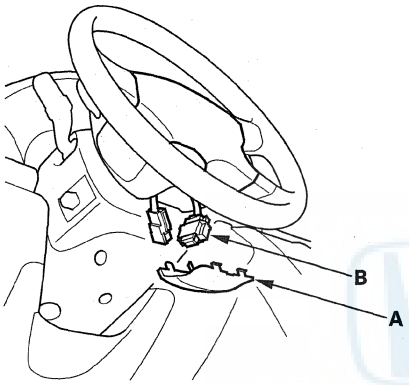

Front Passenger's Airbag

4. Remove the glove box (see page 20-103), then disconnect the front passenger's airbag 4P connector (A) from dashboard wire harness.

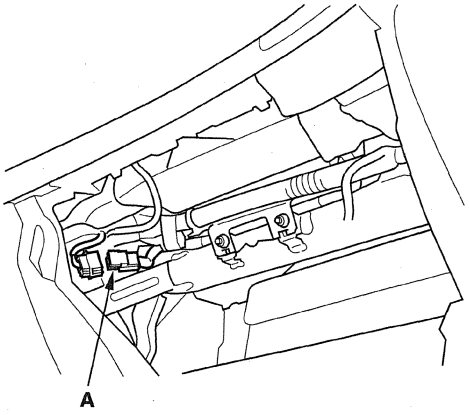

Side Airbag

5. Disconnect driver's and front passenger's side airbag 2P connectors (A) from the left or right side wire harness.

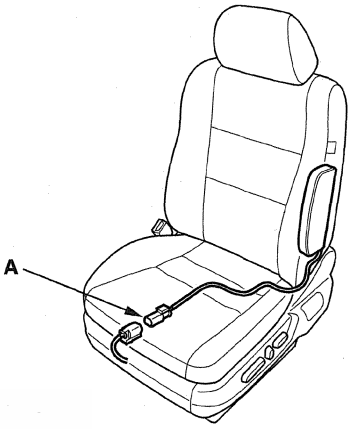

Side Curtain Airbag

6. Remove the C-pillar trim (see page 20-76).

7. Disconnect left or right side wire harness 2P connectors (A) from the side curtain airbags.

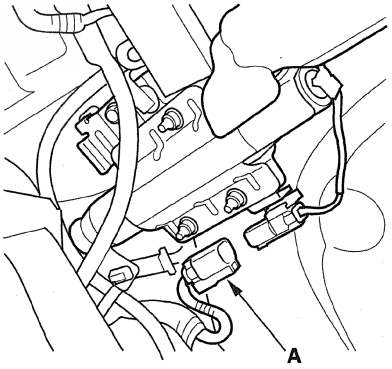

(cont'd)

Precautions and Procedures (cont'd)

Seat Belt Tensioner

8. Remove the B-pillar lower trim (see page 20-72).
9. Disconnect both floor wire harness 4P connector (A) from the seat belt tensioners.

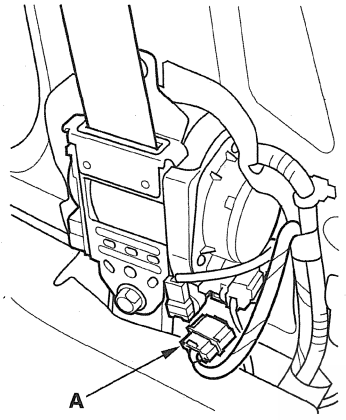

SRS Unit

10. Remove the center console (see page 20-92), then remove the rear vent duct A (see step 5 on page 20-110). Disconnect SRS unit connector A (28P), SRS unit connector B (28P), and/or SRS unit connector C (28P) from the SRS unit.

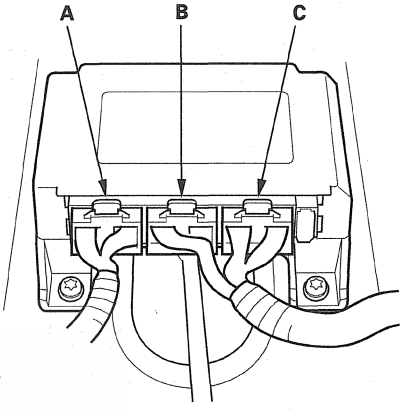

General Troubleshooting Information

DTC (Diagnostic Trouble Codes)

The self-diagnostic function of the SRS system allows it to locate the causes of system problems and store this information in memory. For easier troubleshooting, this data can be retrieved with the HDS via the data link circuit.

- When you turn the ignition switch to ON (II), the SRS indicator should come on. If it goes off after 6 seconds, the system is normal, and is not currently detecting any abnormality.
- If there is a problem, the system locates and defines the problem, stores this information in memory, and turns the SRS indicator on. The data remains in memory even if the ignition switch is turned to LOCK (0) or the battery is disconnected.
- The data is stored in memory as a diagnostic trouble code (DTC).
- DTCs are either latching or resetting depending on the malfunction. With resetting DTCs, the SRS indicator goes off the next time the ignition switch is turned to ON (II) and the system is normal, but the DTC is still stored. With latching DTCs, the SRS indicator does not turn OFF until the malfunction is repaired and the DTC is cleared.
- When you connect the HDS to the data link connector (DLC), you can retrieve a more detailed DTC in the HDS "SRS" menu.
- After reading and recording the DTC, proceed with the troubleshooting procedure for that code.

Precautions

- Use only a digital multimeter to check the system. If it's not a Honda multimeter, make sure its output is 10 mA (0.01 A) or less when switched to the smallest value in the ohmmeter range. A tester with a higher output could damage the airbag circuit or cause accidental airbag deployment and possible injury.
- Whenever the ignition switch is in ON (II), or has been turned to LOCK (0) for less than 3 minutes, be careful not to bump the SRS unit; the airbags could accidentally deploy and cause damage or injuries.
- Before you remove the dashboard wire harness or the right side wire harness, disconnect the driver's airbag connector, the front passenger's airbag connector, both side airbag connectors, both side curtain airbag connectors, and both seat belt tensioner connectors.
- Make sure the battery is fully charged. If the battery is dead or low, measured values may not be correct.
- Do not touch a tester probe to the terminals in the SRS unit or harness connectors, and do not connect the SRS unit terminals or the sensor terminals with a jumper wire. Use only the backprobe set and the multimeter. Backprobe spring-loaded lock type connectors correctly.

Reading the DTC

1. Make sure the ignition switch is in LOCK (0).
2. Connect the HDS to the data link connector (DLC) (A).

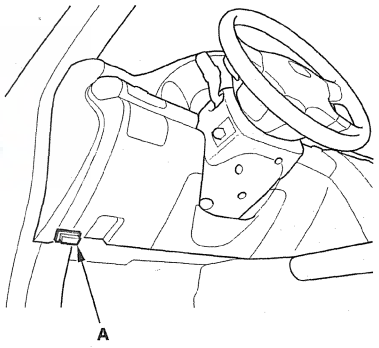

3. Turn the ignition switch to ON (II).
4. Make sure the HDS communicates with the vehicle and the SRS unit. If it does not communicate, troubleshoot the DLC circuit (see page 11-211).
5. Use the HDS to check for DTCs.
6. Read and record the DTC.
7. Turn the ignition switch to LOCK (0), then wait for 10 seconds.
8. Disconnect the HDS from the DLC.
9. Do the troubleshooting procedure for the DTC.

(cont'd)

General Troubleshooting Information (cont'd)

Clear the DTC Memory with the HDS

NOTE: Make sure the battery is fully charged before you begin.

1. Make sure the ignition switch is in LOCK (0).
2. Connect the HDS to the data link connector (DLC) (A).

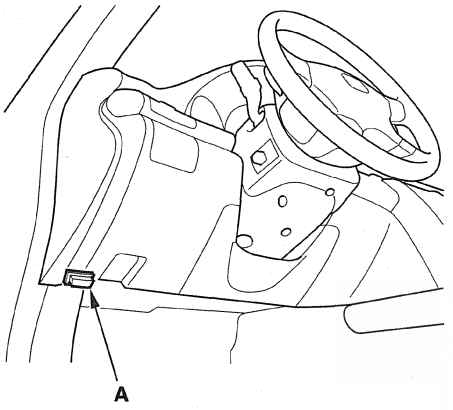

3. Turn the ignition switch to ON (II).
4. Make sure the HDS communicates with the vehicle and the SRS unit. If it does not communicate, troubleshoot the DLC circuit (see page 11-211).
5. In the SRS MENU of the HDS, select SRS, then DTC to clear the DTC(s).
6. Turn the ignition switch to LOCK (0), then wait for 10 seconds.
7. Disconnect the HDS from the DLC.

Clear the DTC Memory Using MES Connector without the HDS

Special Tools Required
SCS Service Connector 07PAZ-001010A

NOTE: Make sure the battery is fully charged before you begin.

To clear the DTC(s) from the SRS unit, use the HDS or the following procedure.

1. Make sure the ignition switch is in LOCK (0).
2. Connect the SCS service connector (A) to the yellow MES 2P connector (B). Do not use a jumper wire.

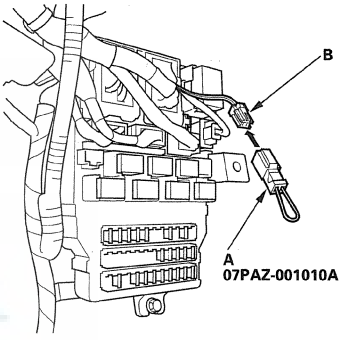

3. Turn the ignition to switch to ON (II).
4. The SRS indicator will come on for about 6 seconds, and then go off. Remove the SCS service connector from the MES connector (2P) within 4 seconds after the indicator goes off.
5. The SRS indicator will come on again. Reconnect the SCS service connector to the MES connector (2P) within 4 seconds after the indicator comes on.
6. When the SRS indicator goes off, remove the SCS service connector from the MES connector (2P) within 4 seconds.
7. The SRS indicator blinks two times, indicating that the memory has been cleared.
8. Turn the ignition switch to LOCK (0), and wait for 10 seconds.
9. Turn the ignition switch to ON (II) again. If the SRS indicator comes on for about 6 seconds, and then goes off, the system is OK.

Troubleshooting Intermittent Failures

If there was a malfunction that sets a DTC, but it does not recur, it will be stored in the memory as a DTC, and the SRS indicator may come on depending on the malfunction detected.

NOTE:
- Check the condition of the battery (see page 22-90), and the charging system (see page 4-28). Low battery voltage may cause some intermittent failures.
- A faulty or damaged cable reel can cause intermittent problems related to the driver's airbag inflator DTCs.

After checking the DTC, troubleshoot as follows:

1. Read the DTC (see Reading the DTC).
2. Clear the DTC memory (see Clear the DTC Memory).
3. Set the parking brake, then start the engine, and let it idle.
4. The SRS indicator comes on for about 6 seconds and then goes off.
5. Shake the related wire harnesses and the connectors, and look for loose connections, poor pinfits, and poor grounds.
6. Take a test-drive (quick acceleration, quick braking, and cornering), turn the steering wheel fully left and right, and hold it there for 5 to 10 seconds. If the problem recurs, the SRS indicator will come on.
7. If you cannot duplicate the concern, ask the client about the conditions when it occurred, or ask the client to demonstrate the concern.
8. If you cannot duplicate the intermittent failure, the system is OK at this time.

HONDA

ODS Unit Initialization

NOTE:
- After ODS unit is replaced, do this procedure to initialize the ODS unit.
- ODS unit initialization will initialize both OPDS sensor and seat weight sensor.

OPDS Sensor Initialization

After a seat-back cover, seat-back cushion, and/or ODS unit is replaced, do this procedure to initialize the OPDS sensor with the HDS unit.

NOTE:
- A new (uninitialized) ODS unit installed with a faulty OPDS sensor can cause DTC 85-71 and DTC 85-78.
- Before initializing the ODS unit, make sure the battery is fully charged.

1. Clear the DTC memory (see page 24-24).
2. Make sure the front passenger's seat is dry. Set the seat-back in a normal position, and make sure there is nothing on the seat.
3. Make sure the ignition switch is in LOCK (0) and the MES connector is not shorted.
4. Connect the HDS to the data link connector (DLC) (A).

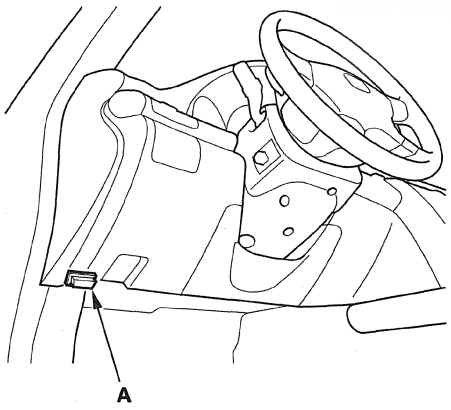

5. Turn the ignition switch to ON (II).
6. Make sure the HDS communicates with the vehicle and the SRS unit. If it does not communicate, troubleshoot the DLC circuit (see page 11-211).
7. From the HDS Main Menu, select SRS, then SRS, then Calibration. In the Calibration Menu, select ODS UNIT INITIALIZATION. Follow the screen prompts to initialize the ODS unit.
8. Turn the ignition switch to LOCK (0).
9. Disconnect the HDS from the DLC.

NOTE: If the ODS unit fails to initialize after several attempts, replace the OPDS sensor/seat-back cover /pad (see page 20-128) and retry. If the ODS unit continues to fail to initialize, replace the ODS unit (see page 24-220).

Front Passenger's Weight Sensor Initialization

When you replace the SRS unit, the front passenger's seat assembly, or the ODS unit, calibrate the seat weight sensor with the HDS unit.

While calibrating the ODS unit, observe these precautions:

- Make sure all components of the front passenger's seat are correctly installed.
- Make sure nothing is on or under the front passenger's seat.
- Make sure there is nothing in the front passenger's seat-back pocket.
- Keep the windows and the moonroof closed.
- Do all calibration procedures, except test-driving, in the service bay.
- Make sure the vehicle is on level ground.
- Keep the A/C and the heater off.
- Do not touch the front passenger's seat during calibration, until you are prompted to or when you have completed the calibration.
- Do not expose the front passenger's seat to sudden temperature changes.

1. Position the front passenger's seat to the rearmost position, adjust the seat height to the lowest position, and adjust the recliner to the forwardmost position. Do not move the seat form this position.
2. Connect the HDS to the data link connector (DLC) (A).

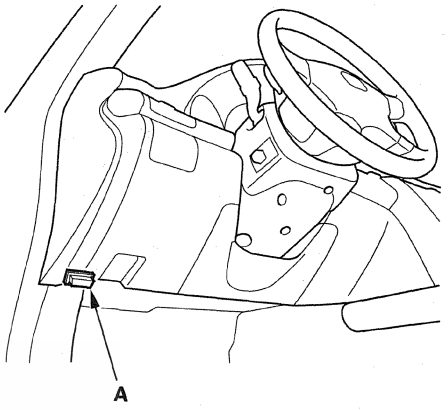

3. Turn the ignition switch to ON (II).
4. Make sure the HDS communicates with the vehicle and the SRS unit. If it does not communicate, troubleshoot the DLC circuit (see page 11-211).
5. Drive the vehicle, and accelerate to 20 mph (36 km/h), then stop on level ground.
6. From the Main Menu, select SRS, then SRS, then Calibration, then select SWS INITIALIZATION, and follow the prompts until the calibration is complete.

HONDA

ODS Unit Operation Check

Check the ODS operation after any of these actions:
- Replacement of front passenger's seat component(s) (except ODS unit and/or weight sensors)
- After a vehicle collision
- SRS unit replacement

Pre-Operation Check Set-up
- Before doing the ODS unit operation check, make sure the battery is fully charged.
- Make sure all the components of the front passenger's seat are correctly installed.
- Position the front passenger's seat all the way rearward. Adjust the seat-back all the way forward. Do not move the seat from this position.
- Make sure nothing is on or under the front passenger's seat.
- Make sure there is nothing in the front passenger's seat-back pocket.
- Keep the windows and the moonroof closed.
- Do all calibration procedures, except test-driving, in the service bay.
- Make sure the vehicle is on level ground.
- Turn the heater and the A/C off.
- Do not touch the passenger's seat during the operation check.
- Do not expose the front passenger's seat to sudden temperature changes.
- Make sure all aftermarket devices such as amplifiers, fluorescent light, air purifiers, CB or HAM radios, etc. are turned off.

After Replacing Front Passenger's Seat Component(s)

1. Connect the HDS to the data link connector (DLC) (A).

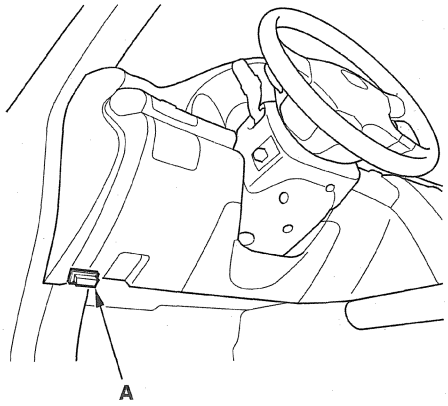

2. Turn the ignition switch to ON (II).
3. Make sure the HDS communicates with the vehicle and the SRS unit. If it does not communicate, troubleshoot the DLC circuit (see page 11-211).
4. Drive the vehicle, accelerate to 20 mph (36 km/h), then stop on level ground.
5. From the HDS Main Menu, select SRS, then Inspection. In the HDS Inspection Menu, select SEAT OUTPUT CHK and follow the prompts until the ODS operation check is complete.

Front Passenger's Weight Sensor Output Check After a Vehicle Collision

1. Position the front passenger's seat to the rear most position, and adjust the seat-back to the forward most position. Do not move the seat from this position.
2. Drive the vehicle, accelerate to 20 mph (36 km/h), then stop on level ground.
3. Make sure the ignition switch is in LOCK (0).
4. Connect the HDS to the data link connector (DLC) (A).

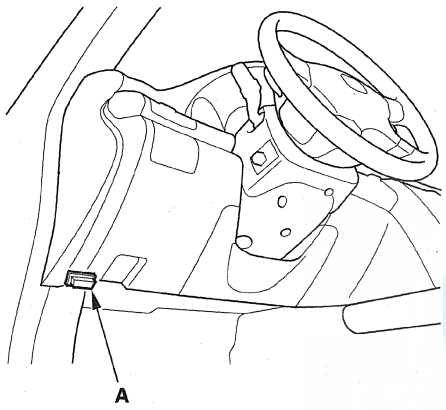

5. Turn the ignition switch to ON (II).
6. Make sure the HDS communicates with the vehicle and the SRS unit. If it does not communicate, troubleshoot the DLC circuit (see page 11-211).
7. From the SRS inspection menu, select Seat Weight Sensor, then Misc test, then SEAT OUTPUT CHK and follow the prompts until the ODS operation check has been completed.

HONDA

Driver's Seat Position Sensor Operation Check

Check the driver's seat position sensor after any of these actions:
- Driver's seat position sensor replacement
- Cover plate (front side of driver's seat slide rail) replacement

1. Make sure the driver's seat is all the way forward.
2. Make sure the ignition switch is in LOCK (0).
3. Connect the HDS to the data link connector (DLC) (A).

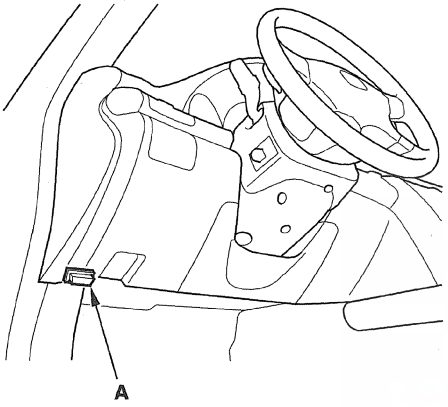

4. Turn the ignition switch to ON (II).
5. Make sure the HDS communicates with the vehicle and the SRS unit. If it does not communicate, troubleshoot the DLC circuit (see page 11-211).
6. From the HDS Main Menu, select SRS, then Parameter Information then Buckle Switch, Seat Position Sensor.
7. Using a piece of tape (A), mark a line on the seat's outer cover (B) where the front riser cover meets the seat riser (C). The driver's seat position sensor should read NEAR.

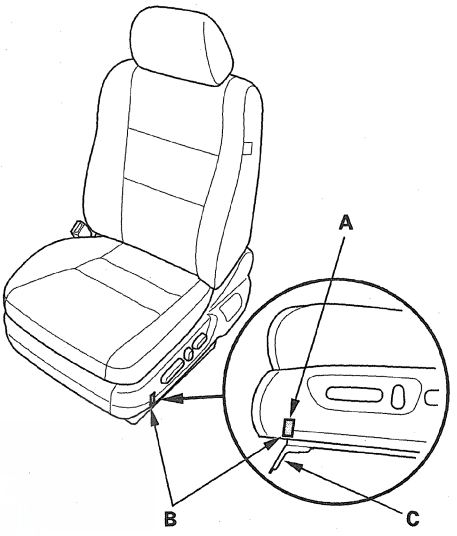

8. Move the seat-back in small increments (about 0.2 in, 5 mm) until the driver's seat position sensor reads NOT NEAR. The seat should be about 1 in (25 mm) from the front.

   NOTE: It takes a few seconds for the HDS to display changes, so wait about 5 seconds between each movement.

   If the driver's seat position sensor data does not work as described above, check the driver's seat position sensor or the cover plate for damage, and replace parts as needed.
9. Turn the ignition switch to LOCK (0), and disconnect the HDS from the DLC.

E-pretensioner Operation Check

1. Shift the transmission to the P position, and release the parking brake.
2. Connect the HDS to the data link connector (DLC) (A).

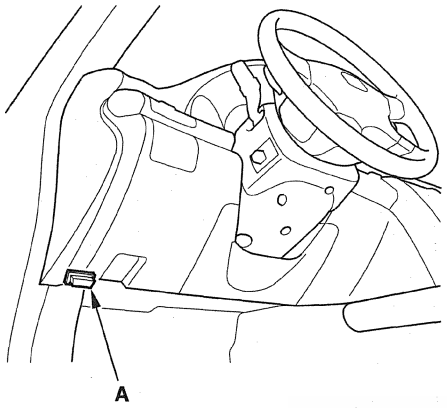

3. Sit in the driver's and front passenger's seat, and fasten the seat belts.
4. Make sure the SRS indicator comes on for about 6 seconds after turning the ignition switch to ON (II), then goes off. If the SRS indicator does not come on, check for DTCs with the HDS.

   NOTE: If any DTC is indicated, do the indicated DTCs troubleshooting, then go to step 5.

5. Start the engine.
6. Make sure the HDS communicates with the vehicle and the SRS unit, If it does not communicate, troubleshoot the DLC circuit (see page 11-211).
7. Select the E-PRETENSIONER with the HDS, and do the E-PRETENSIONER OPERATION CHECK. Make sure the E-pretensioners retract both driver's and front passenger's seat belts several times.
8. Turn the ignition switch to LOCK (0) and make sure the SRS indicator goes off.

DTC Troubleshooting Index

DTC	Latch *1	Reset *2	Detection Item	Notes
11-1x		○	Open in the driver's airbag first inflator	(see page 24-50)
11-2x			Increased resistance in the driver's airbag first inflator	
11-3x			Short to another wire or decreased resistance in the driver's airbag first inflator	(see page 24-52)
11-4x			Open in the driver's airbag second inflator	(see page 24-50)
11-5x			Increased resistance in the driver's airbag second inflator	
11-6x			Short to another wire or decreased resistance in the driver's airbag second inflator	(see page 24-52)
11-8x	○		Short to power in the driver's airbag first inflator	(see page 24-54)
11-9x			Short to ground in the driver's airbag first inflator	(see page 24-55)
11-Ax			Short to power in the driver's airbag second inflator	(see page 24-54)
11-Bx			Short to ground in the driver's airbag second inflator	(see page 24-55)
12-1x		○	Open in the front passenger's airbag first inflator	(see page 24-57)
12-2x			Increased resistance in the front passenger's airbag first inflator	
12-3x			Short to another wire or decreased resistance in the front passenger's airbag first inflator	(see page 24-59)
12-4x			Open in the front passenger's airbag second inflator	(see page 24-57)
12-5x			Increased resistance in the front passenger's airbag second inflator	
12-6x			Short to another wire or decreased resistance in the front passenger's airbag second inflator	(see page 24-59)
12-8x	○		Short to power in the front passenger's airbag first inflator	(see page 24-60)
12-9x			Short to ground in the front passenger's airbag first inflator	(see page 24-62)
12-Ax			Short to power in the front passenger's airbag second inflator	(see page 24-60)
12-Bx			Short to ground in the front passenger's airbag second inflator	(see page 24-62)
21-1x		○	Open in the driver's seat belt tensioner	(see page 24-63)
21-2x			Increased resistance in the driver's seat belt tensioner	
21-3x			Short to another wire or decreased resistance in the driver's seat belt tensioner	(see page 24-65)
21-8x	○		Short to power in the driver's seat belt tensioner	(see page 24-68)
21-9x			Short to ground in the driver's seat belt tensioner	(see page 24-70)
22-1x		○	Open in the front passenger's seat belt tensioner	(see page 24-73)
22-2x			Increased resistance in the front passenger's seat belt tensioner	
22-3x			Short to another wire or decreased resistance in the front passenger's seat belt tensioner	(see page 24-74)
22-8x	○		Short to power in the front passenger's seat belt tensioner	(see page 24-76)
22-9x			Short to ground in the front passenger's seat belt tensioner	(see page 24-77)
31-1x		○	Open in the driver's side airbag inflator	(see page 24-80)
31-2x			Increased resistance in the driver's side airbag inflator	
31-3x			Short to another wire or decreased resistance in the driver's side airbag inflator	(see page 24-82)
31-8x	○		Short to power in the driver's side airbag inflator	(see page 24-84)
31-9x			Short to ground in the driver's side airbag inflator	(see page 24-86)
32-1x		○	Open in the front passenger's side airbag inflator	(see page 24-88)
32-2x			Increased resistance in the front passenger's side airbag inflator	
32-3x			Short to another wire or decreased resistance in the front passenger's side airbag inflator	(see page 24-90)
32-8x	○		Short to power in the front passenger's side airbag inflator	(see page 24-91)
32-9x			Short to ground in the front passenger's side airbag inflator	(see page 24-93)

DTC	Latch *1	Reset *2	Detection Item	Notes
33-1x		○	Open in the left side curtain airbag inflator	(see page 24-95)
33-2x			Increased resistance in the left side curtain airbag inflator	
33-3x			Short to another wire or decreased resistance in the left side curtain airbag inflator	(see page 24-97)
33-8x	○		Short to power in the left side curtain airbag inflator	(see page 24-99)
33-9x			Short to ground in the left side curtain airbag inflator	(see page 24-101)
34-1x		○	Open in the right side curtain airbag inflator	(see page 24-103)
34-2x			Increased resistance in the right side curtain airbag inflator	
34-3x			Short to another wire or decreased resistance in the right side curtain airbag inflator	(see page 24-105)
34-8x	○		Short to power in the right side curtain airbag inflator	(see page 24-108)
34-9x			Short to ground in the right side curtain airbag inflator	(see page 24-110)
41-1x		○	No signal from the left front impact sensor	(see page 24-113)
41-2x			Internal failure of the left front impact sensor	(see page 24-120)
41-8x	○			
41-9x				
41-Bx				
41-Cx			Faulty power supply to the left front impact sensor	(see page 24-115)
42-1x		○	No signal from the right front impact sensor	(see page 24-116)
42-2x			Internal failure of the right front impact sensor	(see page 24-120)
42-8x	○			
42-9x				
42-Bx				
42-Cx			Faulty power supply to the right front impact sensor	(see page 24-119)
43-1x		○	No signal from the left side impact sensor (first)	(see page 24-121)
43-2x			Internal failure of the left side impact sensor (first)	(see page 24-130)
43-8x	○			
43-9x				
43-Bx				
43-Cx			Faulty power supply to the left side impact sensor (first)	(see page 24-123)
44-1x		○	No signal from the right side impact sensor (first)	(see page 24-125)
44-2x			Internal failure of the right side impact sensor (first)	(see page 24-130)
44-8x	○			
44-9x				
44-Bx				
44-Cx			Faulty power supply to the right side impact sensor (first)	(see page 24-128)
45-1x		○	No signal from the left side impact sensor (second)	(see page 24-131)
45-2x			Internal failure of the left side impact sensor (second)	(see page 24-139)
45-8x				
45-9x				
45-Bx	○			
45-Cx			Faulty power supply to the left side impact sensor (second)	(see page 24-133)
46-1x		○	No signal from the right side impact sensor (second)	(see page 24-135)
46-2x			Internal failure of the right side impact sensor (second)	(see page 24-139)
46-8x				
46-9x				
46-Bx	○			
46-Cx			Faulty power supply to the right side impact sensor (second)	(see page 24-137)

NOTE: The "x" at the end of each DTC denotes a numeric character (0 thru 9) or an alpha character (A thru F) that you will see on the HDS display. The character is unrelated to your troubleshooting; it designates the SRS unit manufacturer and other details used for product analysis.

* 1: The SRS indicator turns on and stays on whenever the ignition switch is in the ON (II) position, or until the code is cleared.
* 2: The SRS indicator turns on when the DTC is set. The SRS indicator will not turn on after the ignition switch is turned from ON (II) to LOCK (0), but the DTC will be stored in the SRS unit.

(cont'd)

DTC Troubleshooting Index (cont'd)

DTC	Latch *1	Reset *2	Detection Item	Notes
51-xx		○	Internal failure of the SRS unit	(see page 24-140)
52-xx	○			
53-xx		○		
54-xx				
55-xx				
61-1x			Open in the driver's seat belt buckle switch	(see page 24-141)
61-2x			Short in the driver's seat belt buckle switch	(see page 24-144)
62-1x			Open in the front passenger's seat belt buckle switch	(see page 24-147)
62-2x			Short in the front passenger's seat belt buckle switch	(see page 24-150)
71-11			Open in the driver's seat position sensor	(see page 24-153)
71-21			Short in the driver's seat position sensor	(see page 24-154)
71-22			Short to power in the driver's seat position sensor	(see page 24-156)
73-1x			Open in the driver's E-pretensioner motor	(see page 24-157)
74-2x			Open in the front passenger's E-pretensioner motor	(see page 24-158)
76-3x			Faulty F-can communication or internal failure of the E-pretensioner unit	(see page 24-159)
76-4x			Internal failure of the E-pretensioner unit	(see page 24-160)
76-5x				
76-61			No signal from the E-pretensioner unit	
76-63			Internal failure of the E-pretensioner unit	
81-4x			Internal the failure of the ODS unit	(see page 24-163)
81-5x				
81-63				
81-64				
81-61			No signal from the ODS unit	(see page 24-164)
81-62			Non-stipulated data from the ODS unit	
81-71			ODS unit does not calibrate	(see page 24-167)
81-78				
81-79			Front passenger's weight sensors initial check failure	
82-1x			No signal from the inner side front passenger's weight sensor	(see page 24-168)
83-2x			No signal from the outer side front passenger's weight sensor	
85-4x			Internal failure of the ODS unit	(see page 24-169)
85-5x				
85-63				
85-64				
85-61			No signal from the ODS unit	(see page 24-170)
85-62			Non-stipulated data from the ODS unit	
85-71			ODS unit not initialized	(see page 24-169)
85-78				
85-79			OPDS sensor initial check failure	(see page 24-173)
86-1x			Faulty OPDS seat-back sensor	(see page 24-174)
86-2x			Faulty OPDS seat support sensor	
87-3x			Side airbag cutoff indicator stays on/off	(see page 24-175)
91-1x			Internal failure of the SRS unit	(see page 24-176)
91-2x			Short to ground in the SRS indicator circuit	(see page 24-177)
92-1x			Short to power in the front passenger's airbag cutoff indicator	(see page 24-179)
92-2x			Open or short to ground in the passenger's airbag cutoff indicator	(see page 24-180)

DTC	Latch *1	Reset *2	Detection Item	Notes
A1-1x		○	Faulty power supply (VA line)	(see page 24-182)
A2-1x			Faulty power supply (VB line)	(see page 24-183)
B2-1x			No signal from the rear safing sensor	(see page 24-184)
B2-2x			Internal failure of the rear safing sensor	(see page 24-188)
B2-8x	○			
B2-9x				
B2-Bx				
B2-Cx			Faulty power supply to the rear safing sensor	(see page 24-186)
Ex-11			Control operation recorded	(see page 24-140)
Fx-11			Airbags and/or tensioners deployment recorded	(see page 24-188)

NOTE: The "x" at the end of each DTC denotes a numeric character (0 thru 9) or an alpha character (A thru F) that you will see on the HDS display. The character is unrelated to your troubleshooting; it designates the SRS unit manufacturer and other details used for product analysis.

* 1: The SRS indicator comes on and stays on whenever the ignition switch is in the ON (II) position, or until the code is cleared.
* 2: The SRS indicator comes on when the DTC is set. The SRS indicator will not come on after the ignition switch is turned from ON (II) to LOCK (0), but the DTC will be stored in the SRS unit.

HONDA

Symptom Troubleshooting Index

Symptom	Diagnostic procedure	Also check for
SRS indicator does not come on	Symptom Troubleshooting (see page 24-189)	Communication with HDS
SRS indicator stays on, but no DTCs are stored, or cannot be read	Symptom Troubleshooting (see page 24-191)	• Charging system for under or overcharging • Communication with the HDS
Side airbag cutoff indicator stays on after bulb check, and no DTCs are stored, or side airbag cutoff indicator is flashing	• Make sure nothing is on the front passenger's seat. • If the side airbag cutoff indicator stays on after the ignition switch is turned ON (II), initialize the ODS unit (see page 24-26). – If the side airbag cutoff indicator operates normally, the system is OK. – If the side airbag cutoff indicator stays on, replace the OPDS sensor (see page 20-128). The sensor is part of the seat-back pad.	• DTC 87-3x troubleshooting (see page 24-175) • Communication with the HDS
Passenger's airbag cutoff indicator flashes	Check for DTCs. If any DTC is indicated, go to the DTC troubleshooting	• Communication with the HDS • Initialization ODS unit
Passenger's airbag cutoff indicator stays on or comes on suddenly	Symptom Troubleshooting (see page 24-193)	Communication with the HDS
Passenger's airbag cutoff indicator does not come on	Check for DTCs. If any DTC is indicated, go to the DTC troubleshooting	Communication with the HDS
HDS does not communicate with the SRS unit or the vehicle	Troubleshoot the DLC circuit (see page 11-211)	Communication with the HDS

System Description

SRS Components

Airbags

The SRS is a safety device which, when used with the seat belt, is designed to help protect the driver and front passenger in a frontal impact exceeding a certain set limit. The system consists of the SRS unit, including safing sensor and impact sensor (A), the cable reel (B), the driver's airbag (C), the front passenger's airbag (E), side airbags (F), side curtain airbags (L), seat belt tensioners (I), front impact sensors (J), side impact sensors (first) (G), and side impact sensors (second) (K).

Since the driver's and front passenger's airbags use the same sensors, both normally inflate at the same time. However, it is possible for only one airbag to inflate. This can occur when collision severity is near the threshold for airbag deployment. In such case, the SRS will only deploy airbags when the protection provided by the seat belt is insufficient.

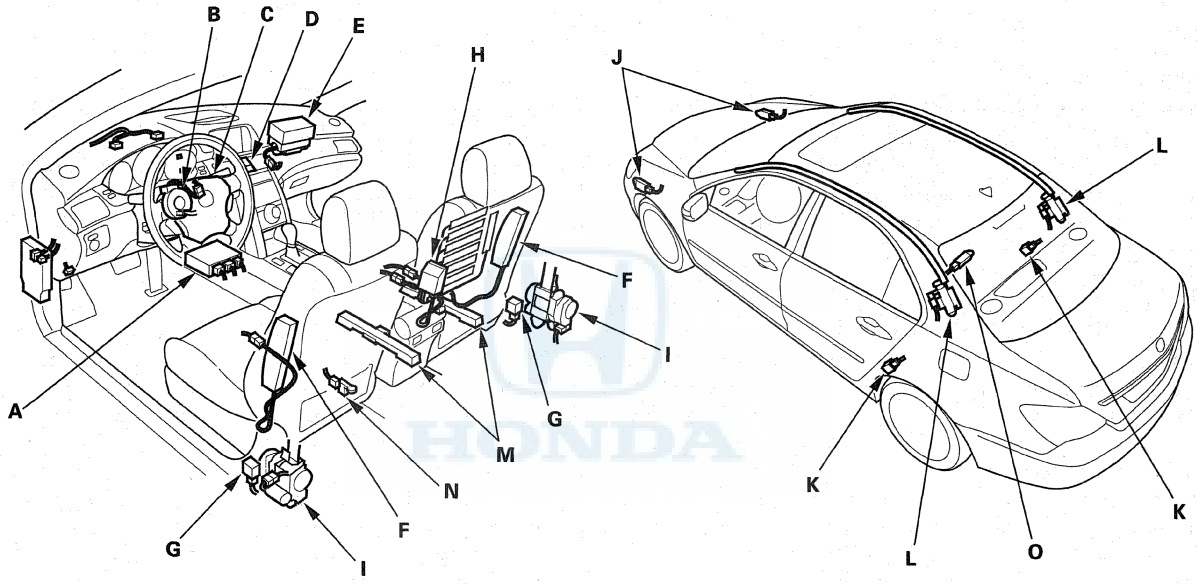

(cont'd)

System Description (cont'd)

Front Passenger's Weight Sensors
The front passenger's weight sensors (M) are part of the front passenger's seat. The front passenger's weight sensors detect the weight on the seat, and send the information to the ODS unit (H). If the total weight is about 65 lbs (30 kg) or less, the ODS unit sends a signal to the SRS unit to prevent the passenger's airbag from deploying. When the passenger's airbag is disabled, the passenger airbag cutoff indicator (D) on the center panel comes on to alert the driver that the front passenger's airbag will not deploy in a front-end collision.

NOTE: The sensors only detect the weight on the seat. The sensors do not detect the weight of the passenger's legs or arms that may be resting on the floor or armrests.

Driver's Seat Position Sensor
The driver's seat position sensor (N) is under the driver's seat on the left side. When the driver's seat is moved all the way forward, the deployment of the driver's airbag is moderated to decrease its force of impact during a front-end collision.

Rear Safing Sensor
The rear safing sensor (O) is located under the middle of the rear seat. The rear safing sensor performs the same basic function as the safing sensor in the SRS unit. It measures sideways G force, such as the force the vehicle would receive in a side collision in the rear, and sends that information to the SRS unit. The SRS unit uses that information, and the information from the second side impact sensors to determine the side that is impacted and the force. If the threshold is met, the SRS unit deploys the side airbag, the side curtain airbag and the seat belt tensioner on that side.

Side Airbags
The side airbags (F) are in each front seat-back. They help protect the upper torso of the driver or front seat passenger during a moderate to severe side impact. Side impact sensors (first) (G) in each door sill, side impact sensors (second) (K) in each rear door sill, rear safing sensor under the rear seat (O), and the SRS unit safing sensor detect such an impact and instantly inflate the driver's or the passenger's side airbag. Only one side airbag will deploy during a side impact. If the impact is on the passenger's side, the passenger's side airbag will deploy even if there is no passenger.

Side Curtain Airbags
The side curtain airbags (L) are in each side of the roof. They help protect the head of the driver, front passenger, and passengers in the rear outer seats during a moderate to severe side impact. Side impact sensors (first) (G) in each front door sill, side impact sensors (second) (K) in each rear door sill, rear safing sensor (O) under the rear seat, and the SRS unit detect such an impact and instantly inflate the driver's or the passenger's side curtain airbag. A side impact causes the side curtain airbag and the side airbag on the impacted side to deploy at the same time.

Seat Belt Tensioners
The seat belt tensioners are linked with the SRS airbags to further increase the effectiveness of the seat belt. In a front-end collision, the tensioners instantly retract the belt firmly to secure the driver and front passenger in their seats.

Side Airbag Cutoff Indicator/ODS Operation

The indicator comes on if the front passenger's seat is occupied by a small adult or child who is leaning into the deployment path, or an object (grocery bag, briefcase, purse, etc.) is in the seat. This indicates the passenger's side airbag is off and will not deploy; there is no problem with the side airbag. If the passenger sits upright or moves to another seat, or you remove the object from the seat, the light should go off. There will be some delay between the occupant's repositioning, and when the indicator will turn on or off.

Passenger's Airbag Cutoff Indicator/Seat Weight Sensor Operation

The indicator comes on if the weight on the front passenger's seat is about 65 lbs (30 kg) or less. This indicates the passenger's front airbag is off and will not deploy. The front airbag is shut off to reduce the chance of airbag-caused injuries.

SRS Operation

The main circuit in the SRS unit senses and judges the force of impact and, if necessary, ignites the inflator charges. If battery voltage is too low or power is disconnected due to the impact, the voltage regulator and the back-up power circuit will keep voltage at a constant level.

For the SRS to operate

Seat Belt Tensioners

(1) A front impact sensor, side impact sensor, or the rear safing sensor must activate and send electric signals to the microprocessor.
(2) The microprocessor must compute the signals and trigger the tensioners.
(3) The charges must ignite and deploy the tensioners.

Driver's and Front Passenger's Airbag(s)

(1) A front impact sensor must activate and send electric signals to the microprocessor.
(2) The microprocessor must compute the signals and trigger the airbag inflator(s).
(3) The triggered inflators that receives signals must ignite and deploy the airbags.

Side Airbag(s)

(1) A side impact sensor must activate and send electric signals to the microprocessor.
(2) The microprocessor must compute the signals and trigger the side airbag inflator(s). However, the microprocessor does not trigger the front passenger's side airbag if the SRS unit determines that the front passenger's head is in the deployment path of the side airbag.
(3) The triggered inflators the signal must ignite and deploy the side airbags.

Side Curtain Airbag(s)

(1) A side impact sensor or the rear safing sensor must activate and send electrical signals to the microprocessor.
(2) The microprocessor must compute the signals and trigger the side curtain airbag and side airbag inflator(s).
(3) The triggered inflators that must ignite and deploy the side curtain airbag and side airbag at the same time.

(cont'd)

System Description (cont'd)

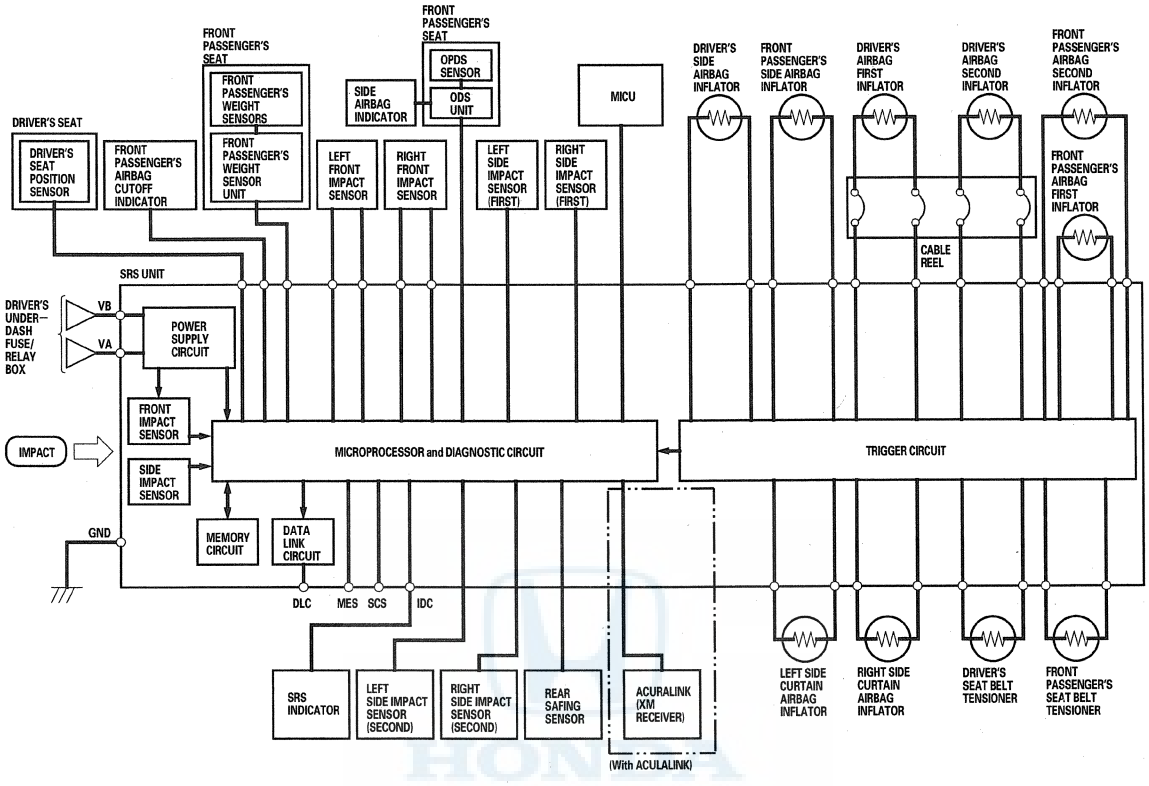

Self-Diagnosis System

A self-diagnosis circuit is built into the SRS unit; when the ignition switch is turned to ON (II), the SRS indicator comes on and goes off after about 6 seconds if the system is operating normally.

If the indicator does not come on, or does not go off after 6 seconds, or comes on while driving, it indicates a problem in the system. The system must be inspected and repaired as soon as possible.

For better serviceability, the SRS unit memory stores a DTC that relates to the cause of the malfunction, and the unit is connected to the data link connector (DLC). This information can be read with the HDS when it is connected to the DLC (see page 24-23).

NOTE: Before you disconnect the negative cable from the battery for troubleshooting, review Battery Terminal Disconnection and Reconnection (see page 22-91).

E-pretensioner

When at a risk of a collision, the E-pretensioner system, working with the collision mitigation braking system (CMBS), retracts the driver's and front passenger's seat belt several times slightly to provide a tactile warning to the driver. And when a collision is imminent, the E-pretensioner system retracts the seat belt tightly to help reduce injury from the impact. The E-pretensioner system also works when the driver brakes hard and the brake assist system is turned on.

CMBS and E-pretensioner Operation

Approaching a vehicle ahead: When driving, the millimeter wave radar detects a vehicle ahead, and the system provides audible and visual warnings if it detects a risk of collision.

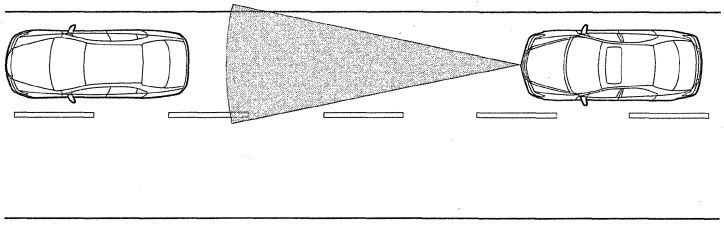

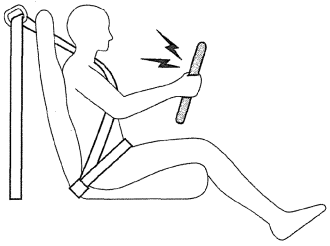

Closing on a vehicle ahead: The system applies light braking, and increases seat belt tension slightly to provide a tactile warning to the driver. The front passenger does not feel the tactile warning.

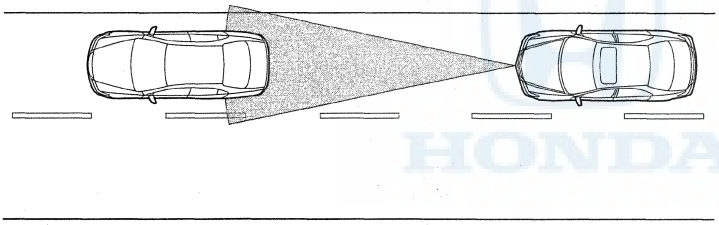

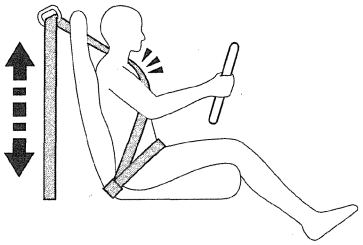

Collision unavoidable: The system activates strong braking, and securely tightens both the driver's and front passenger's seat belts to help reduce injury caused by the impact.

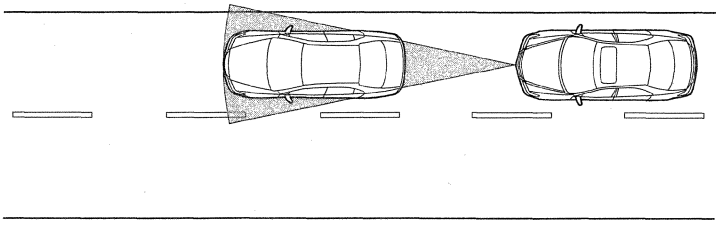

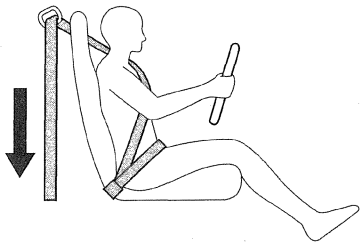

(cont'd)

System Description (cont'd)

E-pretensioner

The mechanical portion of the E-pretensioner consists of the motor and the gear sections. When the collision mitigation brake or the brake assist system signals are input, the motor in the retractor section is driven to rewind or retract. If the system judges that the driving situation is safe, the tension on the seat belts is released. The E-pretensioners used in conjunction with the conventional tensioners.

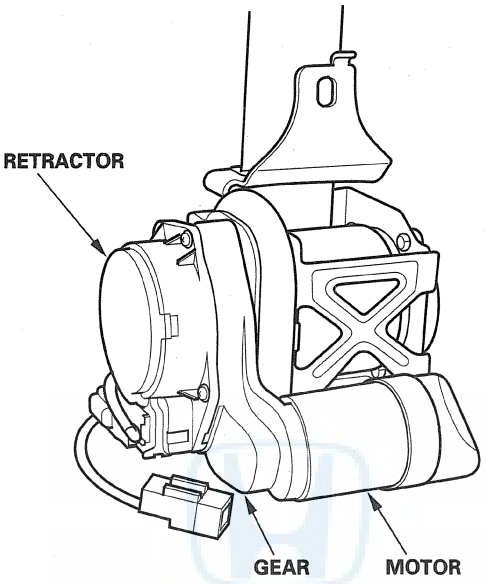

E-pretensioner Unit

The E-pretensioner unit operates the motor-driving controls based on F-CAN data it receives from the adaptive cruise control unit, VSA modulator-control unit, and the PCM. Also the E-pretensioner unit receives seat belt buckle switch signals from the SRS unit by an interactive communication function. The E-pretensioner unit has a self-diagnostic function, and if it detects a malfunction, it sends its information to the SRS unit. The SRS indicator is then turned on by the SRS unit.

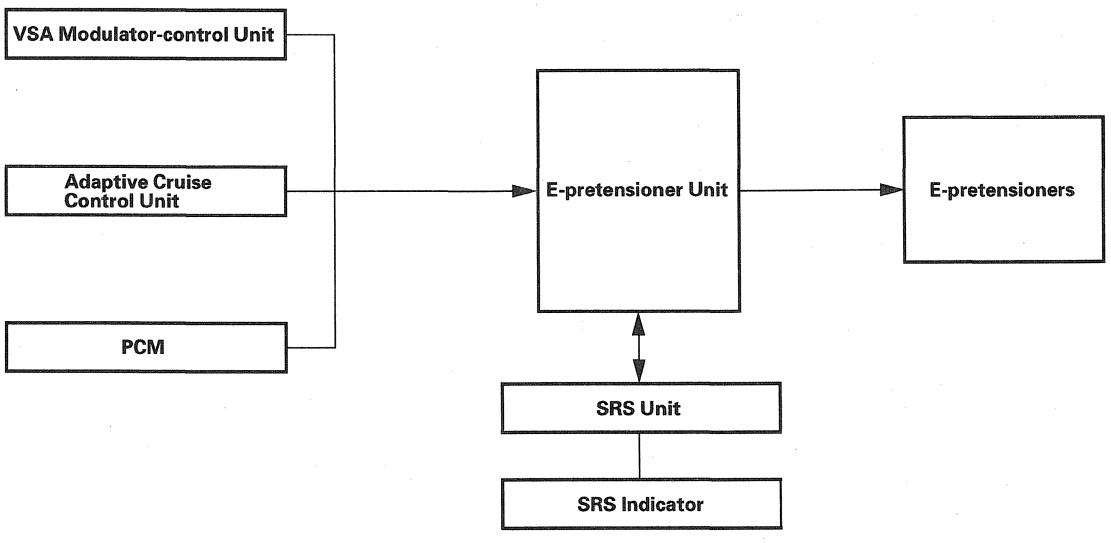

SRS Unit Inputs and Outputs at Connector A (28P)

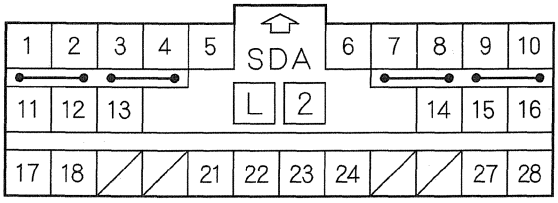

Wire side of female terminals

Terminal Number	Wire Color	Terminal Name	Description
1	GRN*	LA2+	Power source for the driver's airbag second inflator
2	PUR*	LA2−	Ground for the driver's airbag second inflator
3	LT GRN*	RA2+	Power source for the front passenger's airbag second inflator
4	LT BLU*	RA2−	Ground for the front passenger's airbag second inflator
5	LT GRN*	MES	Memory delete signal input
6	BRN*	SCS	Service check signal input
7	LT BLU*	LA1+	Power source for the driver's airbag first inflator
8	BRN*	LA1−	Ground for the driver's airbag first inflator
9	YEL*	RA1+	Power source for the front passenger's airbag first inflator
10	BLU*	RA1−	Ground for the front passenger's airbag first inflator
11	LT BLU*	WARN	Gauge control module
12	ORN*	PTT	Passenger's airbag cutoff indicator output line
13	ORN*	DIAG-LINE	Acuralink control unit (XM receiver)
14	GRN*	ODS	Sends and receives communication signal with the ODS unit
15	BRN*	LFS−	Ground for the left front impact sensor
16	LT BLU*	RFS−	Ground for the right front impact sensor
17	GRN*	VA	SRS system sub power (common with ODS)
18	RED*	VB	SRS dedicated power (dedicated booster circuit)
21	YEL*	CDS	Multiplex integrated control unit (MICU)
22	BLK*	SRS GND (1)	Ground circuit for the SRS (G505)
23	BLK*	SRS GND (2)	Ground circuit for the SRS (G505)
24	RED*	K-LINE	Sends and receives scan tool signal (serial data)
27	RED*	LFS+	Power source for the left front impact sensor
28	GRN*	RFS+	Power source for the right front impact sensor

* : Wire colors may be substituted in this table.

(cont'd)

System Description (cont'd)

SRS Unit Inputs and Outputs at Connector B (28P)

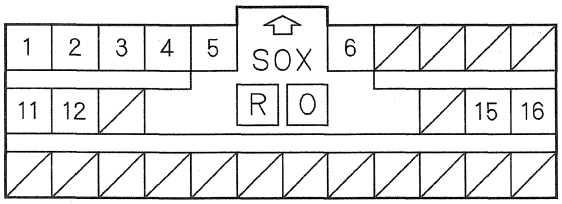

Wire side of female terminals

Terminal Number	Wire Color	Terminal Name	Description
1	RED*	LRP+	Power source for the driver's seat belt tensioner
2	BRN*	LRP−	Ground for the driver's seat belt tensioner
3	GRN*	RRP+	Power source for the front passenger's seat belt tensioner
4	LT BLU*	RRP−	Ground for the front passenger's seat belt tensioner
5	GRY*	SS−	Ground for the driver's seat position sensor
6	LT GRN*	SS+	Power source for the driver's seat position sensor
11	YEL*	LBSC	Driver's seat belt buckle switch unbuckled signal
12	LT GRN*	LBSO	Driver's seat belt buckle switch buckled signal
15	BLU*	RBSC	Front passenger's seat belt buckle switch unbuckled signal
16	ORN*	RBSO	Front passenger's seat belt buckle switch buckled signal

*: Wire colors may be substituted in this table.

SRS Unit Inputs and Outputs at Connector C (28P)

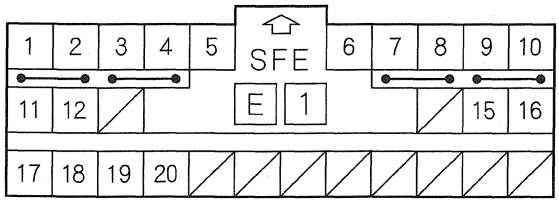

Wire side of female terminals

Terminal Number	Wire Color	Terminal Name	Description
1	GRN*	LSA+	Power source for the driver's side airbag inflator
2	RED*	LSA−	Ground for the driver's side airbag inflator
3	WHT*	RSA+	Power source for the front passenger's side airbag inflator
4	BLU*	RSA−	Ground for the front passenger's side airbag inflator
5	GRN*	SSS+	Power source for the rear safing sensor
6	LT BLU*	SSS−	Ground for the rear safing sensor
7	BRN*	LCA+	Power source for the left side curtain airbag inflator
8	BLU*	LCA−	Ground for the left side curtain airbag inflator
9	GRY*	RCA+	Power source for the right side curtain airbag inflator
10	RED*	RCA−	Ground for the right side curtain airbag inflator
11	PNK*	LBS1+	Power source for the left side impact sensor (first)
12	GRY*	LBS1−	Ground for the left side impact sensor (first)
15	BRN*	RBS1+	Power source for the right side impact sensor (first)
16	LT GRN*	RBS1−	Ground for the right side impact sensor (first)
17	GRN*	LCS1+	Power source for the left side impact sensor (second)
18	ORN*	LCS1−	Ground for the left side impact sensor (second)
19	LT GRN*	RCS1+	Power source for the right side impact sensor (second)
20	YEL*	RCS1−	Ground for the right side impact sensor (second)

* : Wire colors may be substituted in this table.

Circuit Diagram

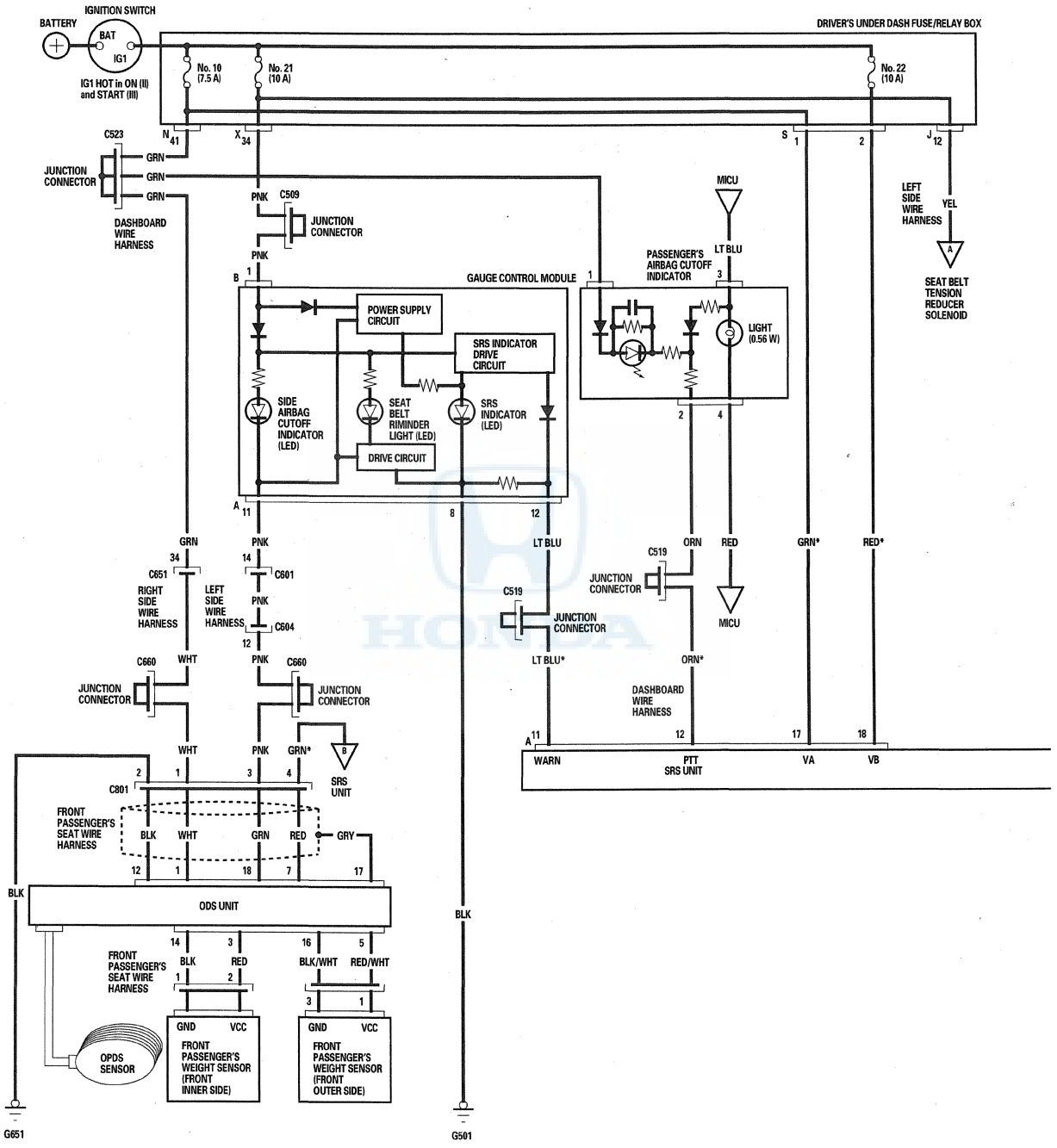

* : Wire colors may be substituted for SRS circuits

: Other communication line

: Shielding

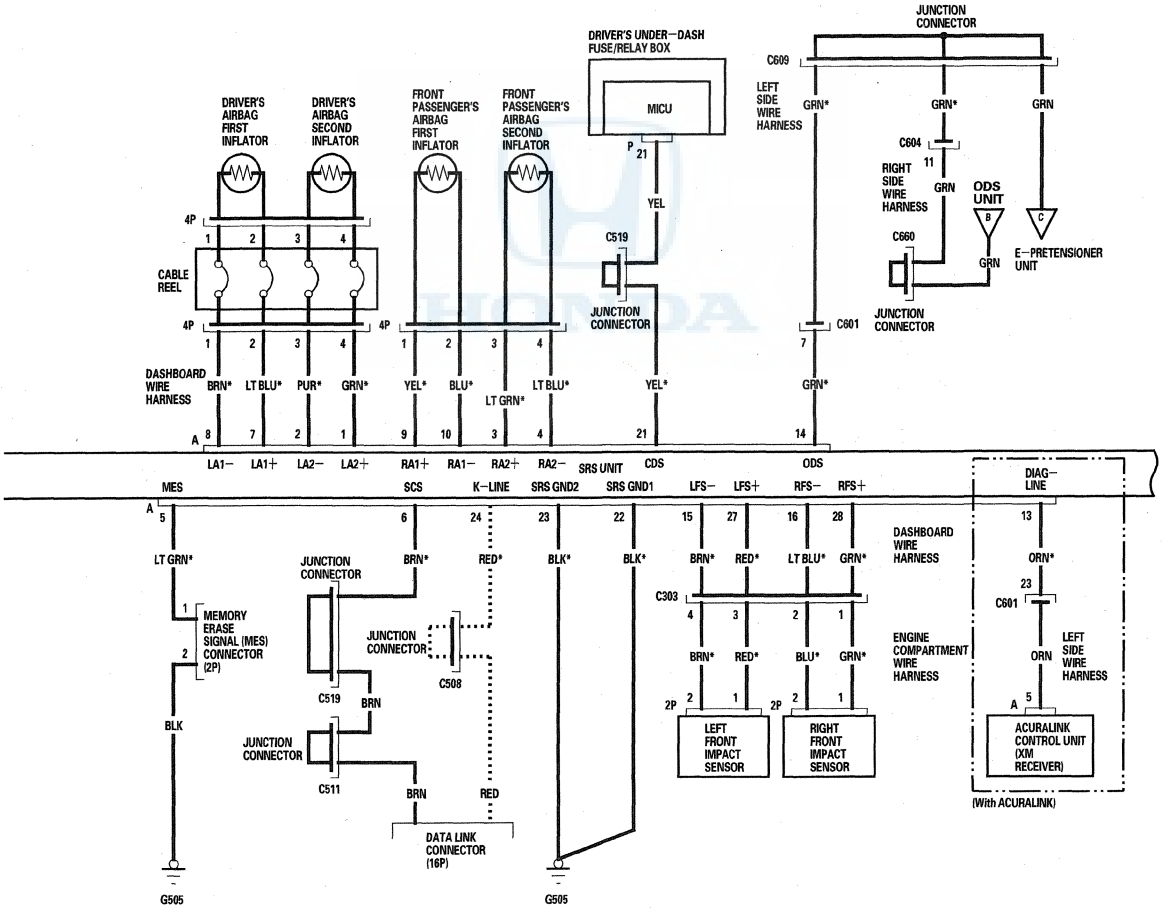

(cont'd)

Circuit Diagram (cont'd)

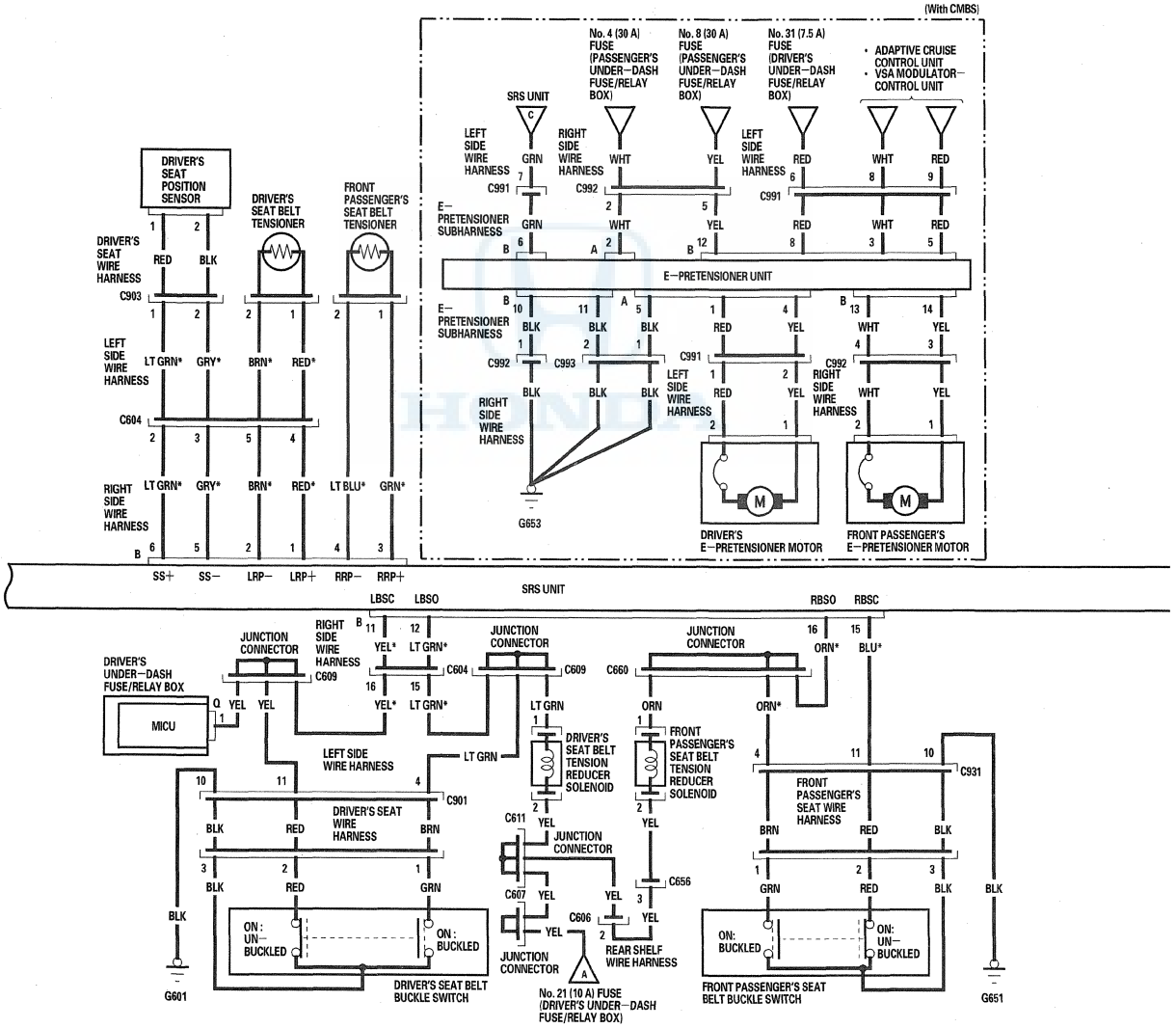

* : Wire colors may be substituted for SRS circuits

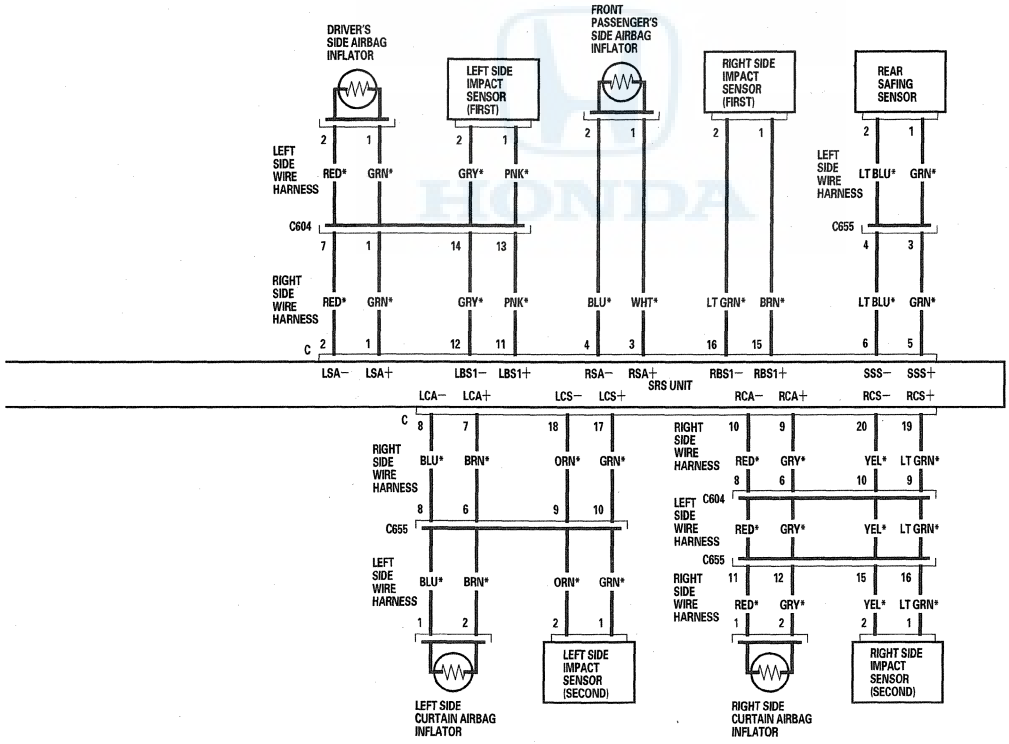

DTC Troubleshooting

DTC 11-1x ("x" can be 0 thru 9 or A thru F):
Open in the Driver's Airbag First Inflator

DTC 11-2x ("x" can be 0 thru 9 or A thru F):
Increased Resistance in the Driver's Airbag First Inflator

DTC 11-4x ("x" can be 0 thru 9 or A thru F):
Open in the Driver's Airbag Second Inflator

DTC 11-5x ("x" can be 0 thru 9 or A thru F):
Increased Resistance in the Driver's Airbag Second Inflator

Special Tools Required
- SRS inflator simulator 07SAZ-TB4011A
- SRS simulator lead F 07XAZ-SZ30100

NOTE: Before doing this troubleshooting procedure, review SRS Precautions and Procedures (see page 24-14), General Troubleshooting Information (see page 24-23), and Battery Terminal Disconnection and Reconnection (see page 22-91).

1. Clear the DTC memory (see page 24-24).
2. Turn the ignition switch to ON (II), and check that the SRS indicator comes on for about 6 seconds and then goes off.

   Does the SRS indicator stay on, and is DTC 11-1x, 11-2x, 11-4x, or 11-5x indicated?

   YES—Go to step 3.

   NO—Intermittent failure, the system is OK at this time. Go to Troubleshooting Intermittent Failures (see page 24-25). If another DTC is indicated, troubleshoot the DTC. ■
3. Turn the ignition switch to LOCK (0).
4. Disconnect the negative cable from the battery, then wait at least 3 minutes.
5. Remove the access panel, then disconnect the driver's airbag 4P connector (A) from the cable reel.

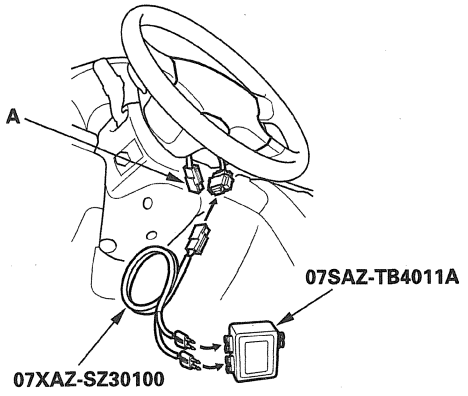

6. Connect the SRS inflator simulator (2 Ω connectors) and simulator lead F to the cable reel.
7. Reconnect the negative cable to the battery.
8. Clear the DTC memory.
9. Read the DTC (see page 24-23).

   Is DTC 11-1x, 11-2x, 11-4x, or 11-5x indicated?

   YES—Go to step 10.

   NO—Open in the driver's airbag first or second inflator; replace the driver's airbag (see page 24-197), then clear the DTC. ■
10. Turn the ignition switch to LOCK (0).
11. Disconnect the negative cable from the battery, then wait at least 3 minutes.

12. Remove the column cover (see page 17-25), then disconnect the dashboard wire harness 4P connector (A) from the cable reel.

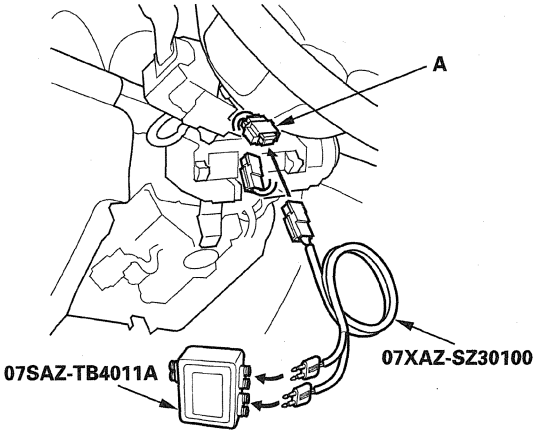

13. Connect the SRS inflator simulator (2 Ω connectors) and simulator lead F to dashboard wire harness.

14. Reconnect the negative cable to the battery.

15. Clear the DTC memory.

16. Read the DTC.

    Is DTC 11-1x, 11-2x, 11-4x, or 11-5x indicated?

    YES—Go to step 17.

    NO—Open in the cable reel; replace the cable reel (see page 24-212), then clear the DTC. ■

17. Turn the ignition switch to LOCK (0).

18. Disconnect the negative cable from the battery, then wait at least 3 minutes.

19. Disconnect SRS unit connector A (28P) from the SRS unit (see step 10 on page 24-22).

20. Disconnect the SRS inflator simulator from the SRS simulator lead. Do not disconnect the simulator lead from the dashboard wire harness 4P connector.

21. Measure the resistance between the terminals of both SRS simulator lead. There should be less than 1.0 Ω.

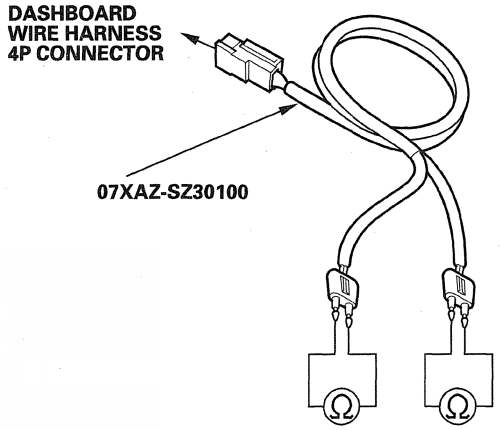

Is the resistance as specified?

YES—Faulty SRS unit or poor connection at SRS unit connector A (28P) and the SRS unit. Check the connection between the connector and the SRS unit. If the connection is OK, replace the SRS unit (see page 24-215). ■

NO—Open in the dashboard wire harness; replace the dashboard wire harness , then clear the DTC. ■

HONDA

DTC Troubleshooting (cont'd)

DTC 11-3x ("x" can be 0 thru 9 or A thru F): Short to Another Wire or Decreased Resistance in the Driver's Airbag First Inflator

DTC 11-6x ("x" can be 0 thru 9 or A thru F): Short to Another Wire or Decreased Resistance in the Driver's Airbag Second Inflator

Special Tools Required
- SRS inflator simulator 07SAZ-TB4011A
- SRS simulator lead F 07XAZ-SZ30100
- SRS short canceller 070AZ-SAA0100

NOTE: Before doing this troubleshooting procedure, review SRS Precautions and Procedures (see page 24-14), General Troubleshooting Information (see page 24-23), and Battery Terminal Disconnection and Reconnection (see page 22-91).

1. Clear the DTC memory (see page 24-24).
2. Turn the ignition switch to ON (II), and check that the SRS indicator comes on for about 6 seconds and then goes off.

   Does the SRS indicator stay on, and is DTC 11-3x or 11-6x indicated?

   YES—Go to step 3.

   NO—Intermittent failure, the system is OK at this time. Go to Troubleshooting Intermittent Failures (see page 24-25). If another DTC is indicated, troubleshoot the DTC. ■
3. Turn the ignition switch to LOCK (0).
4. Disconnect the negative cable from the battery, then wait at least 3 minutes.
5. Remove the access panel, then disconnect the driver's airbag 4P connector (A) from the cable reel.

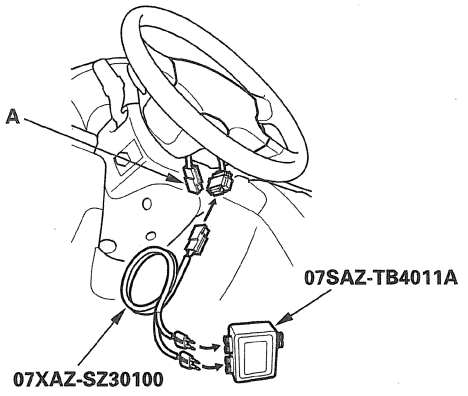

6. Connect the SRS inflator simulator (2 Ω connectors) and simulator lead F to the cable reel.
7. Reconnect the negative cable to the battery.
8. Clear the DTC memory.
9. Read the DTC (see page 24-23).

   Is DTC 11-3x or 11-6x indicated?

   YES—Go to step 10.

   NO—Short in the driver's airbag first or second inflator; replace the driver's airbag (see page 24-197), then clear the DTC. ■

10. Turn the ignition switch to LOCK (0).

11. Disconnect the negative cable from the battery, then wait at least 3 minutes.

12. Remove the column cover (see page 17-25), then disconnect dashboard wire harness 4P connector (A) from the cable reel.

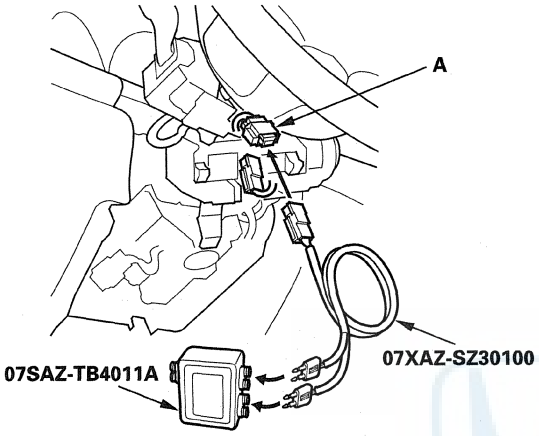

13. Connect the SRS inflator simulator (2 Ω connectors) and simulator lead F to dashboard wire harness.

14. Reconnect the negative cable to the battery.

15. Clear the DTC memory.

16. Read the DTC.

    Is DTC 11-3x or 11-6x indicated?

    YES—Go to step 17.

    NO—Short in the cable reel; replace the cable reel (see page 24-212), then clear the DTC. ■

17. Turn the ignition switch to LOCK (0).

18. Disconnect the negative cable from the battery, then wait at least 3 minutes.

19. Disconnect SRS unit connector A (28P) from the SRS unit (see step 10 on page 24-22).

20. Disconnect the SRS inflator simulator from the SRS simulator lead. Do not disconnect the simulator lead from the dashboard wire harness 4P connector.

21. Connect a SRS short canceller (070AZ-SAA0100) to SRS unit connector A (28P) terminals No. 7 and No. 8 and to terminals No. 1 and No. 2 (see page 24-19).

22. Measure the resistance between the terminals of both SRS simulator leads. There should be an open circuit or at least 1 MΩ.

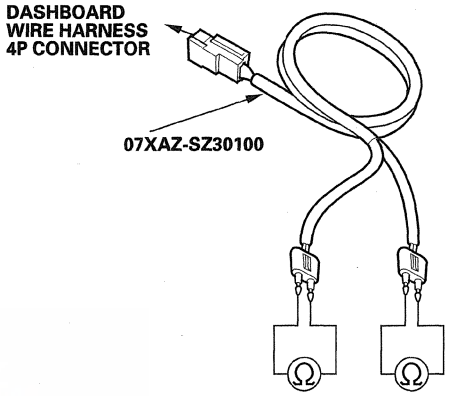

Is the resistance as specified?

YES—Faulty SRS unit or poor connection at SRS unit connector A (28P) and the SRS unit. Check the connection between the connector and the SRS unit. If the connection is OK, replace the SRS unit (see page 24-215). ■

NO—Short to another wire in the dashboard wire harness; replace the dashboard wire harness, then clear the DTC. ■

DTC Troubleshooting (cont'd)

DTC 11-8x ("x" can be 0 thru 9 or A thru F): Short to Power in the Driver's Airbag First Inflator

DTC 11-Ax ("x" can be 0 thru 9 or A thru F): Short to Power in the Driver's Airbag Second Inflator

Special Tools Required
- SRS inflator simulator 07SAZ-TB4011A
- SRS simulator lead F 07XAZ-SZ30100

NOTE: Before doing this troubleshooting procedure, review SRS Precautions and Procedures (see page 24-14), General Troubleshooting Information (see page 24-23), and Battery Terminal Disconnection and Reconnection (see page 22-91).

1. Clear the DTC memory (see page 24-24).
2. Turn the ignition switch to ON (II), and check that the SRS indicator comes on for about 6 seconds and then goes off.

   Does the SRS indicator stay on, and is DTC 11-8x or 11-Ax indicated?

   YES—Go to step 3.

   NO—Intermittent failure, the system is OK at this time. Go to Troubleshooting Intermittent Failures (see page 24-25). If another DTC is indicated, troubleshoot the DTC. ■
3. Turn the ignition switch to LOCK (0).
4. Disconnect the negative cable from the battery, then wait at least 3 minutes.
5. Remove the access panel, then disconnect the driver's airbag 4P connector (A) from the cable reel.

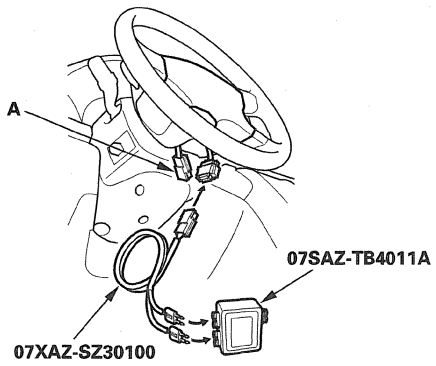

6. Connect the SRS inflator simulator (2 Ω connectors) and simulator lead F to the cable reel.
7. Reconnect the negative cable to the battery.
8. Clear the DTC memory.
9. Read the DTC (see page 24-23).

   Is DTC 11-8x or 11-Ax indicated?

   YES—Go to step 10.

   NO—Short to power in the driver's airbag first or second inflator; replace the driver's airbag (see page 24-197), then clear the DTC. ■
10. Turn the ignition switch to LOCK (0).
11. Disconnect the negative cable from the battery, then wait at least 3 minutes.
12. Remove the column cover (see page 17-25), then disconnect the dashboard wire harness 4P connector (A) from the cable reel.

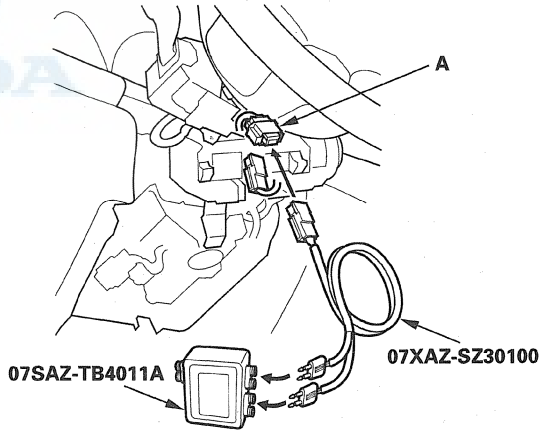

13. Connect the SRS inflator simulator (2 Ω connectors) and simulator lead F to dashboard wire harness.
14. Reconnect the negative cable to the battery.
15. Clear the DTC memory.

16. Read the DTC.

    Is DTC 11-8x or 11-Ax indicated?

    YES—Go to step 17.

    NO—Short to power in the cable reel; replace the cable reel (see page 24-212), then clear the DTC. ■

17. Turn the ignition switch to LOCK (0).

18. Disconnect the negative cable from the battery, then wait at least 3 minutes.

19. Disconnect SRS unit connector A (28P) from the SRS unit (see step 10 on page 24-22).

20. Disconnect the SRS inflator simulator from the SRS simulator lead. Do not disconnect the simulator lead from the dashboard wire harness 4P connector.

21. Reconnect the negative cable to the battery.

22. Turn the ignition switch to ON (II).

23. Measure the voltage between each terminal of both SRS simulator lead and body ground. There should be less than 0.2 V.

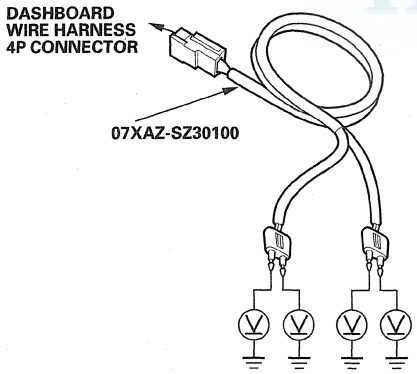

    Is the voltage as specified?

    YES—Faulty SRS unit or poor connection at SRS unit connector A (28P) and the SRS unit. Check the connection between the connector and the SRS unit. If the connection is OK, replace the SRS unit (see page 24-215). ■

    NO—Short to power in the dashboard wire harness; replace the dashboard wire harness, then clear the DTC. ■

DTC 11-9x ("x" can be 0 thru 9 or A thru F): Short to Ground in the Driver's Airbag First Inflator

DTC 11-Bx ("x" can be 0 thru 9 or A thru F): Short to Ground in the Driver's Airbag Second Inflator

Special Tools Required
- SRS inflator simulator 07SAZ-TB4011A
- SRS simulator lead F 07XAZ-SZ30100

NOTE: Before doing this troubleshooting procedure, review SRS Precautions and Procedures (see page 24-14), General Troubleshooting Information (see page 24-23), and Battery Terminal Disconnection and Reconnection (see page 22-91).

1. Clear the DTC memory (see page 24-24).

2. Turn the ignition switch to ON (II), and check that the SRS indicator comes on for about 6 seconds and then goes off.

    Does the SRS indicator stay on, and is DTC 11-9x or 11-Bx indicated?

    YES—Go to step 3.

    NO—Intermittent failure, the system is OK at this time. Go to Troubleshooting Intermittent Failures (see page 24-25). If another DTC is indicated, troubleshoot the DTC. ■

3. Turn the ignition switch to LOCK (0).

4. Disconnect the negative cable from the battery, then wait at least 3 minutes.

(cont'd)

DTC Troubleshooting (cont'd)

5. Remove the access panel, then disconnect the driver's airbag 4P connector (A) from the cable reel.

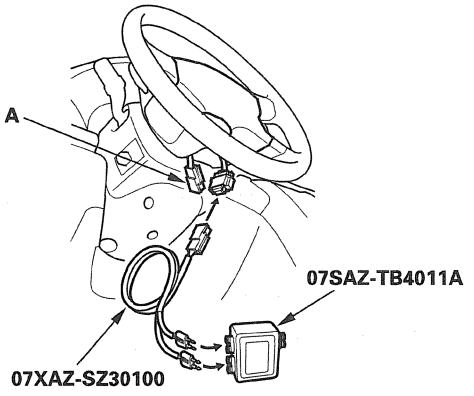

6. Connect the SRS inflator simulator (2 Ω connectors) and simulator lead F to the cable reel.
7. Reconnect the negative cable to the battery.
8. Clear the DTC memory.
9. Read the DTC (see page 24-23).

   Is DTC 11-9x or 11-Bx indicated?

   YES—Go to step 10.

   NO—Short to ground in the driver's airbag first or second inflator; replace the driver's airbag (see page 24-197), then clear the DTC. ■
10. Turn the ignition switch to LOCK (0).
11. Disconnect the negative cable from the battery, then wait at least 3 minutes.
12. Remove the column cover (see page 17-25), then disconnect the dashboard wire harness 4P connector (A) from the cable reel.

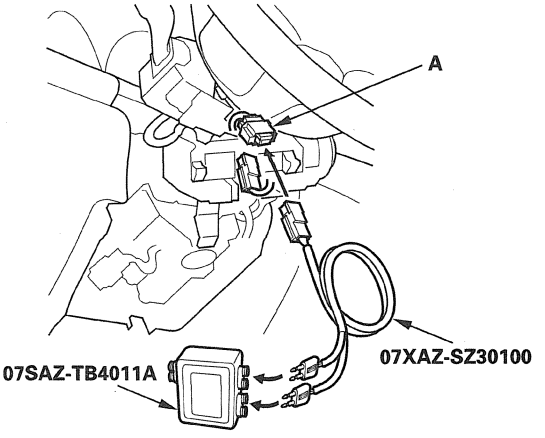

13. Connect the SRS inflator simulator (2 Ω connectors) and simulator lead F to dashboard wire harness.
14. Reconnect the negative cable to the battery.
15. Clear the DTC memory.
16. Read the DTC.

    Is DTC 11-9x or 11-Bx indicated?

    YES—Go to step 17.

    NO—Short to ground in the cable reel; replace the cable reel (see page 24-212), then clear the DTC. ■

17. Turn the ignition switch to LOCK (0).

18. Disconnect the negative cable from the battery, then wait at least 3 minutes.

19. Disconnect SRS unit connector A (28P) from the SRS unit (see step 10 on page 24-22).

20. Disconnect the SRS inflator simulator from the SRS simulator lead. Do not disconnect the simulator lead from the dashboard wire harness 4P connector.

21. Measure the resistance between each terminal of both SRS simulator lead and body ground. There should be an open circuit or at least 1 MΩ.

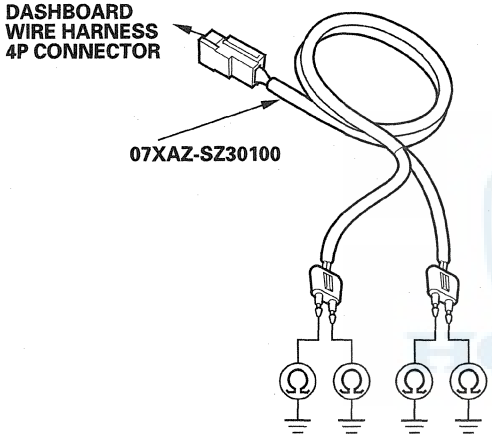

Is the resistance as specified?

YES—Faulty SRS unit or poor connection at SRS unit connector A (28P) and the SRS unit. Check the connection between the connector and the SRS unit. If the connection is OK, replace the SRS unit (see page 24-215). ■

NO—Short to ground in the dashboard wire harness; replace the dashboard wire harness, then clear the DTC. ■

DTC 12-1x ("x" can be 0 thru 9 or A thru F): Open in the Front Passenger's Airbag First Inflator

DTC 12-2x ("x" can be 0 thru 9 or A thru F): Increased Resistance in the Front Passenger's Airbag First Inflator

DTC 12-4x ("x" can be 0 thru 9 or A thru F): Open in the Front Passenger's Airbag Second Inflator

DTC 12-5x ("x" can be 0 thru 9 or A thru F): Increased Resistance in the Front Passenger's Airbag Second Inflator

Special Tools Required
- SRS inflator simulator 07SAZ-TB4011A
- SRS simulator lead F 07XAZ-SZ30100

NOTE: Before doing this troubleshooting procedure, review SRS Precautions and Procedures (see page 24-14), General Troubleshooting Information (see page 24-23), and Battery Terminal Disconnection and Reconnection (see page 22-91).

1. Clear the DTC memory (see page 24-24).

2. Turn the ignition switch to ON (II), and check that the SRS indicator comes on for about 6 seconds and then goes off.

   Does the SRS indicator stay on, and is DTC 12-1x, 12-2x, 12-4x, or 12-5x indicated?

   YES—Go to step 3.

   NO—Intermittent failure, the system is OK at this time. Go to Troubleshooting Intermittent Failures (see page 24-25). If another DTC is indicated, troubleshoot the DTC. ■

3. Turn the ignition switch to LOCK (0).

4. Disconnect the negative cable from the battery, then wait at least 3 minutes.

(cont'd)

DTC Troubleshooting (cont'd)

5. Remove the glove box (see page 20-103), then disconnect the front passenger's airbag 4P connector (A) from the dashboard wire harness 4P connector.

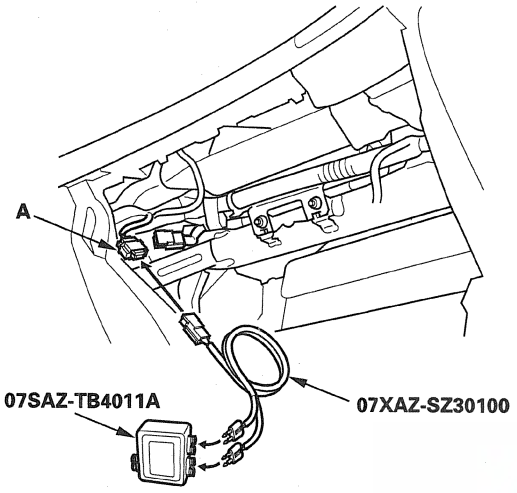

6. Connect the SRS inflator simulator (2 Ω connectors) and simulator lead F to dashboard wire harness.

7. Reconnect the negative cable to the battery.

8. Clear the DTC memory.

9. Read the DTC (see page 24-23).

   Is DTC 12-1x, 12-2x, 12-4x, or 12-5x indicated?

   YES—Go to step 10.

   NO—Open or increased resistance in the front passenger's airbag first or second inflator; replace the front passenger's airbag (see page 24-198), then clear the DTC. ■

10. Turn the ignition switch to LOCK (0).

11. Disconnect the negative cable from the battery, then wait at least 3 minutes.

12. Disconnect SRS unit connector A (28P) from the SRS unit (see step 10 on page 24-22).

13. Disconnect the SRS inflator simulator from the SRS simulator lead. Do not disconnect the simulator lead from the dashboard wire harness 4P connector.

14. Measure the resistance between the terminals of both SRS simulator lead. There should be less than 1.0 Ω.

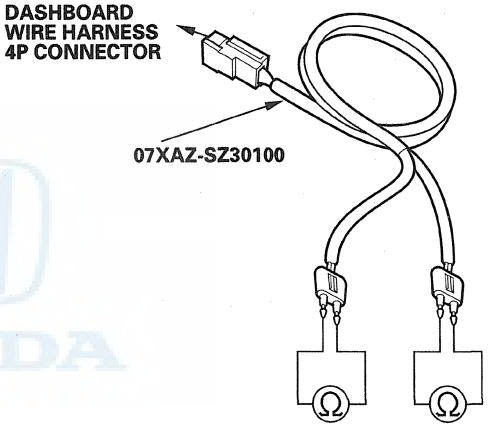

Is the resistance as specified?

YES—Faulty SRS unit or poor connection at SRS unit connector A (28P). Check the connection; if the connection is OK, replace the SRS unit (see page 24-215). ■

NO—Open or increased resistance in the dashboard wire harness; replace the dashboard wire harness, then clear the DTC. ■

DTC 12-3x ("x" can be 0 thru 9 or A thru F): Short to Another Wire or Decreased Resistance in the Front Passenger's Airbag First Inflator

DTC 12-6x ("x" can be 0 thru 9 or A thru F): Short to Another Wire or Decreased Resistance in the Front Passenger's Airbag Second Inflator

Special Tools Required
- SRS inflator simulator 07SAZ-TB4011A
- SRS simulator lead F 07XAZ-SZ30100
- SRS short canceller 070AZ-SAA0100

NOTE: Before doing this troubleshooting procedure, review SRS Precautions and Procedures (see page 24-14), General Troubleshooting Information (see page 24-23), and Battery Terminal Disconnection and Reconnection (see page 22-91).

1. Clear the DTC memory (see page 24-24).
2. Turn the ignition switch to ON (II), and check that the SRS indicator comes on for about 6 seconds and then goes off.

   Does the SRS indicator stay on, and is DTC 12-3x or 12-6x indicated?

   YES—Go to step 3.

   NO—Intermittent failure, the system is OK at this time. Go to Troubleshooting Intermittent Failures (see page 24-25). If another DTC is indicated, troubleshoot the DTC. ■
3. Turn the ignition switch to LOCK (0).
4. Disconnect the negative cable from the battery, then wait at least 3 minutes.
5. Remove the glove box (see page 20-103), then disconnect the front passenger's airbag 4P connector (A) from dashboard wire harness 4P connector.

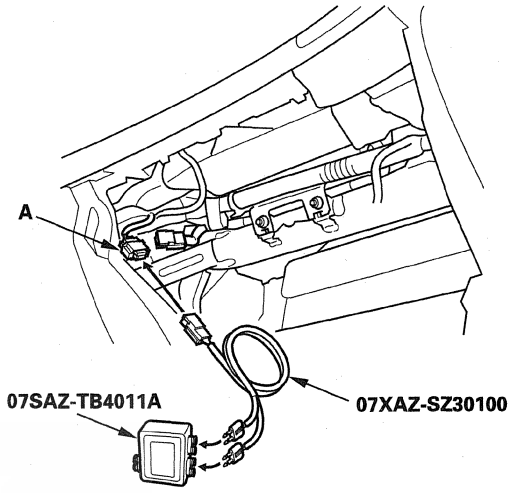

6. Connect the SRS inflator simulator (2 Ω connectors) and simulator lead F to dashboard wire harness.
7. Reconnect the negative cable to the battery.
8. Clear the DTC memory.
9. Read the DTC (see page 24-23).

   Is DTC 12-3x or 12-6x indicated?

   YES—Go to step 10.

   NO—Short in the front passenger's airbag first or second inflator; replace the front passenger's airbag (see page 24-198), then clear the DTC. ■

(cont'd)

DTC Troubleshooting (cont'd)

10. Turn the ignition switch to LOCK (0).

11. Disconnect the negative cable from the battery, then wait at least 3 minutes.

12. Disconnect SRS unit connector A (28P) from the SRS unit (see step 10 on page 24-22).

13. Disconnect the SRS inflator simulator from the SRS simulator lead. Do not disconnect the simulator lead from the dashboard wire harness 4P connector.

14. Connect a SRS short canceller (070AZ-SAA0100) to SRS unit connector A (28P) terminals No. 9 and No. 10 and to terminals No. 3 and No. 4 (see page 24-19).

15. Measure the resistance between the terminals of both SRS simulator lead. There should be an open circuit or at least 1 MΩ.

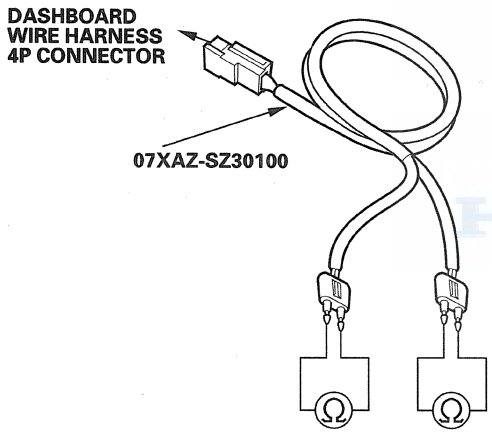

Is the resistance as specified?

YES—Faulty SRS unit or poor connection at SRS unit connection A (28P) and the SRS unit. Check the connection between the connector and the SRS unit. If the connection is OK, replace the SRS unit (see page 24-215). ■

NO—Short to another wire in the dashboard wire harness; replace the dashboard wire harness, then clear the DTC. ■

DTC 12-8x ("x" can be 0 thru 9 or A thru F): Short to Power in the Front Passenger's Airbag First Inflator

DTC 12-Ax ("x" can be 0 thru 9 or A thru F): Short to Power in the Front Passenger's Airbag Second Inflator

Special Tools Required
- SRS inflator simulator 07SAZ-TB4011A
- SRS simulator lead F 07XAZ-SZ30100

NOTE: Before doing this troubleshooting procedure, review SRS Precautions and Procedures (see page 24-14), General Troubleshooting Information (see page 24-23), and Battery Terminal Disconnection and Reconnection (see page 22-91).

1. Clear the DTC memory (see page 24-24).

2. Turn the ignition switch to ON (II), and check that the SRS indicator comes on for about 6 seconds and then goes off.

Does the SRS indicator stay on, and is DTC 12-8x or 12-Ax indicated?

YES—Go to step 3.

NO—Intermittent failure, the system is OK at this time. Go to Troubleshooting Intermittent Failures (see page 24-25). If another DTC is indicated, troubleshoot the DTC. ■

3. Turn the ignition switch to LOCK (0).

4. Disconnect the negative cable from the battery, then wait at least 3 minutes.

5. Remove the glove box (see page 20-103), then disconnect the front passenger's airbag 4P connector (A) from dashboard wire harness 4P connector.

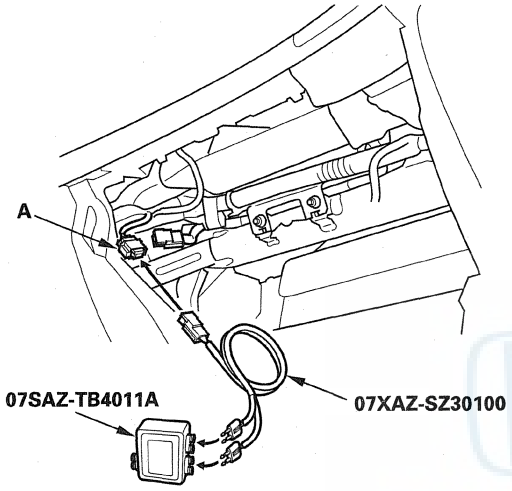

6. Connect the SRS inflator simulator (2 Ω connectors) and simulator lead F to the dashboard wire harness.

7. Reconnect the negative cable to the battery.

8. Clear the DTC memory.

9. Read the DTC (see page 24-23).

Is DTC 12-8x or 12-Ax indicated?

YES—Go to step 10.

NO—Short to power in the front passenger's airbag first or second inflator; replace the front passenger's airbag (see page 24-198), then clear the DTC. ■

10. Turn the ignition switch to LOCK (0).

11. Disconnect the negative cable from the battery, then wait at least 3 minutes.

12. Disconnect SRS unit connector A (28P) from the SRS unit (see step 10 on page 24-22).

13. Disconnect the SRS inflator simulator from the SRS simulator lead. Do not disconnect the simulator lead from the dashboard wire harness 4P connector.

14. Reconnect the negative cable to the battery.

15. Turn the ignition switch to ON (II).

16. Measure the voltage between each terminal of both SRS simulator lead and body ground. There should be less than 0.2 V.

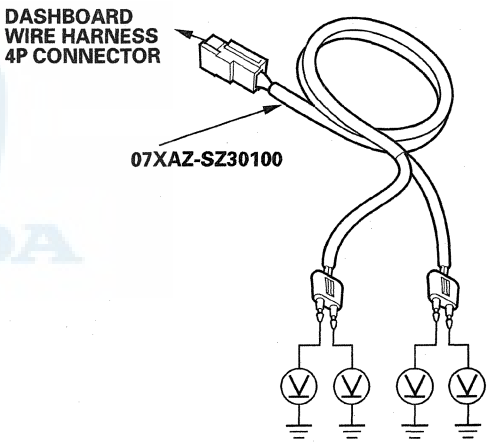

Is the voltage as specified?

YES—Faulty SRS unit or poor connection at SRS unit connection A (28P) and the SRS unit. Check the connection between the connector and the SRS unit. If the connection is OK, replace the SRS unit (see page 24-215). ■

NO—Short to power in the dashboard wire harness; replace the dashboard wire harness, then clear the DTC. ■

DTC Troubleshooting (cont'd)

DTC 12-9x ("x" can be 0 thru 9 or A thru F): Short to Ground in the Front Passenger's Airbag First Inflator

DTC 12-Bx ("x" can be 0 thru 9 or A thru F): Short to Ground in the Front Passenger's Airbag Second Inflator

Special Tools Required
- SRS inflator simulator 07SAZ-TB4011A
- SRS simulator lead F 07XAZ-SZ30100

NOTE: Before doing this troubleshooting procedure, review SRS Precautions and Procedures (see page 24-14), General Troubleshooting Information (see page 24-23), and Battery Terminal Disconnection and Reconnection (see page 22-91).

1. Clear the DTC memory (see page 24-24).
2. Turn the ignition switch to ON (II), and check that the SRS indicator comes on for about 6 seconds and then goes off.

   Does the SRS indicator stay on, and is DTC 12-9x or 12-Bx indicated?

   YES—Go to step 3.

   NO—Intermittent failure, the system is OK at this time. Go to Troubleshooting Intermittent Failures (see page 24-25). If another DTC is indicated, troubleshoot the DTC. ■
3. Turn the ignition switch to LOCK (0).
4. Disconnect the negative cable from the battery, then wait at least 3 minutes.
5. Remove the glove box (see page 20-103), then disconnect the front passenger's airbag 4P connector (A) from dashboard wire harness 4P connector.

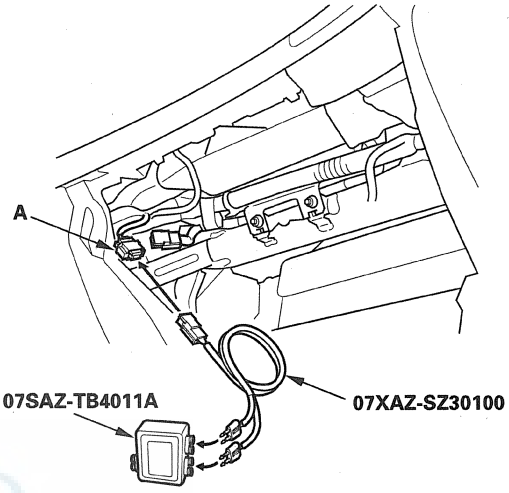

6. Connect the SRS inflator simulator (2 Ω connectors) and simulator lead F to dashboard wire harness.
7. Reconnect the negative cable to the battery.
8. Clear the DTC memory.
9. Read the DTC (see page 24-23).

   Is DTC 12-9x or 12-Bx indicated?

   YES—Go to step 10.

   NO—Short to ground in the front passenger's airbag first or second inflator; replace the front passenger's airbag (see page 24-198), then clear the DTC. ■
10. Turn the ignition switch to LOCK (0).
11. Disconnect the negative cable from the battery, then wait at least 3 minutes.

12. Disconnect SRS unit connector A (28P) from the SRS unit (see step 10 on page 24-22).

13. Disconnect the SRS inflator simulator from the SRS simulator lead. Do not disconnect the simulator lead from the dashboard wire harness 4P connector.

14. Measure the resistance between each terminal of both SRS simulator lead and body ground. There should be an open circuit or at least 1 MΩ.

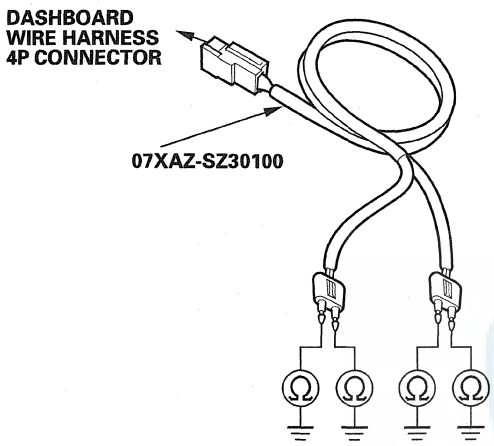

Is the resistance as specified?

YES—Faulty SRS unit or poor connection at SRS unit connection A (28P) and the SRS unit. Check the connection between the connector and the SRS unit. If the connection is OK, replace the SRS unit (see page 24-215). ■

NO—Short to ground in the dashboard wire harness; replace the dashboard wire harness, then clear the DTC. ■

DTC 21-1x ("x" can be 0 thru 9 or A thru F): Open in the Driver's Seat Belt Tensioner

DTC 21-2x ("x" can be 0 thru 9 or A thru F): Increased Resistance in the Driver's Seat Belt Tensioner

Special Tools Required
- SRS inflator simulator 07SAZ-TB4011A
- SRS simulator lead F 07XAZ-SZ30100

NOTE: Before doing this troubleshooting procedure, review SRS Precautions and Procedures (see page 24-14), General Troubleshooting Information (see page 24-23), and Battery Terminal Disconnection and Reconnection (see page 22-91).

1. Clear the DTC memory (see page 24-24).

2. Turn the ignition switch to ON (II), and check that the SRS indicator comes on for about 6 seconds and then goes off.

   Does the SRS indicator stay on, and is DTC 21-1x or 21-2x indicated?

   YES—Go to step 3.

   NO—Intermittent failure, the system is OK at this time. Go to Troubleshooting Intermittent Failures (see page 24-25). If another DTC is indicated, troubleshoot the DTC. ■

3. Turn the ignition switch to LOCK (0).

4. Disconnect the negative cable from the battery, then wait at least 3 minutes.

(cont'd)

DTC Troubleshooting (cont'd)

5. Remove the B-pillar lower trim (see page 20-72), then disconnect the left side wire harness 4P connector (A) from the driver's seat belt tensioner.

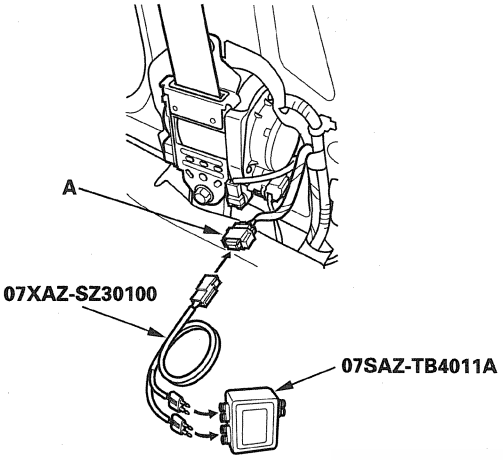

6. Connect the SRS inflator simulator (2 Ω connectors) and simulator lead F to the left side wire harness.

7. Reconnect the negative cable to the battery.

8. Clear the DTC memory.

9. Read the DTC (see page 24-23).

   Is DTC 21-1x or 21-2x indicated?

   YES—Go to step 10.

   NO—Open or increased resistance in the driver's seat belt tensioner; replace the driver's seat belt (see page 24-4), then clear the DTC. ■

10. Turn the ignition switch to LOCK (0).

11. Disconnect the negative cable from the battery, then wait at least 3 minutes.

12. Disconnect SRS unit connector B (28P) from the SRS unit (see step 10 on page 24-22).

13. Measure the resistance between SRS unit connector B (28P) terminals No. 1 and No. 2. There should be 2.0—3.0 Ω.

SRS UNIT CONNECTOR B (28P)

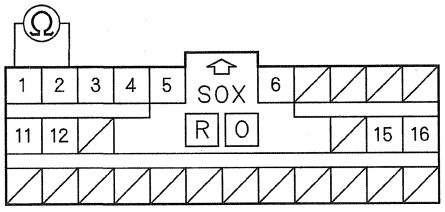

Wire side of female terminals

Is the resistance as specified?

YES—Faulty SRS unit or poor connection at SRS unit connector B (28P) and the SRS unit. Check the connection; if the connection is OK, replace the SRS unit (see page 24-215). ■

NO—Go to step 14.

14. Disconnect right side wire harness 16P connector C604 (A) from left side wire harness connector C604 (B).

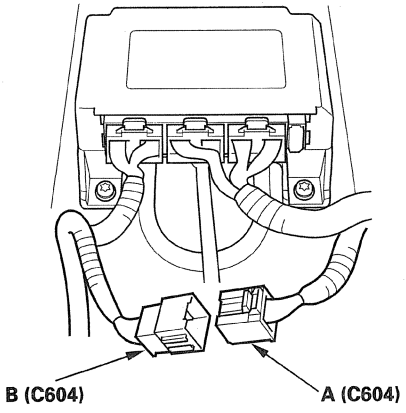

15. Measure the resistance between left side wire harness 16P connector C604 terminals No. 4 and No. 5. There should be 2.0—3.0 Ω.

LEFT SIDE WIRE HARNESS 16P CONNECTOR C604

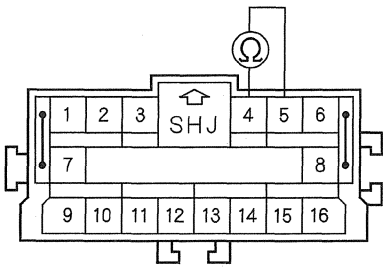

Terminal side of male terminals

Is the resistance as specified?

YES—Open or increased resistance in the right side wire harness; replace the right side wire harness, then clear the DTC. ■

NO—Open or increased resistance in the left side wire harness; replace the left side wire harness, then clear the DTC. ■

DTC 21-3x ("x" can be 0 thru 9 or A thru F): Short to Another Wire or Decreased Resistance in the Driver's Seat Belt Tensioner

Special Tools Required
- SRS inflator simulator 07SAZ-TB4011A
- SRS simulator lead F 07XAZ-SZ30100

NOTE: Before doing this troubleshooting procedure, review SRS Precautions and Procedures (see page 24-14), General Troubleshooting Information (see page 24-23), and Battery Terminal Disconnection and Reconnection (see page 22-91).

1. Clear the DTC memory (see page 24-24).

2. Turn the ignition switch to ON (II), and check that the SRS indicator comes on for about 6 seconds and then goes off.

   Does the SRS indicator stay on, and is DTC 21-3x indicated?

   YES—Go to step 3.

   NO—Intermittent failure, the system is OK at this time. Go to Troubleshooting Intermittent Failures (see page 24-25). If another DTC is indicated, troubleshoot the DTC. ■

3. Turn the ignition switch to LOCK (0).

4. Disconnect the negative cable from the battery, then wait at least 3 minutes.

(cont'd)

DTC Troubleshooting (cont'd)

5. Remove the B-pillar lower trim (see page 20-72), then disconnect the left side wire harness 4P connector (A) from the driver's seat belt tensioner.

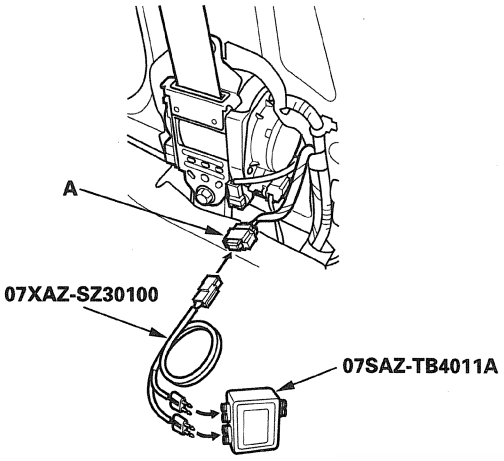

6. Connect the SRS inflator simulator (2 Ω connectors) and simulator lead F to the left side wire harness.

7. Reconnect the negative cable to the battery.

8. Clear the DTC memory.

9. Read the DTC (see page 24-23).

   Is DTC 21-3x indicated?

   YES—Go to step 10.

   NO—Short in the driver's seat belt tensioner; replace the driver's seat belt (see page 24-4), then clear the DTC. ■

10. Turn the ignition switch to LOCK (0).

11. Disconnect the negative cable from the battery, then wait at least 3 minutes.

12. Disconnect SRS unit connector B (28P) from the SRS unit (see step 10 on page 24-22).

13. Disconnect the simulator lead from the left side wire harness.

14. Measure the resistance between SRS unit connector B (28P) terminals No. 1 and No.2. There should be an open circuit or at least 1 MΩ.

SRS UNIT CONNECTOR B (28P)

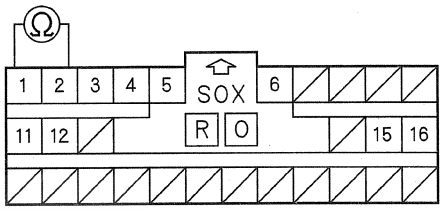

Wire side of female terminals

Is the resistance as specified?

YES—Faulty SRS unit or poor connection at SRS unit connector B (28P) and the SRS unit. Check the connection; if the connection is OK, replace the SRS unit (see page 24-215). ■

NO—Go to step 15.

15. Disconnect right side wire harness 16P connector C604 (A) from the left side wire harness connector C604 (B).

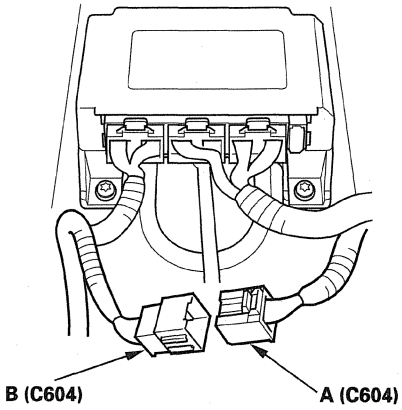

16. Measure the resistance between right side wire harness 16P connector C604 terminals No. 4 and No. 5. There should be an open circuit or at least 1 MΩ.

RIGHT SIDE WIRE HARNESS 16P CONNECTOR C604

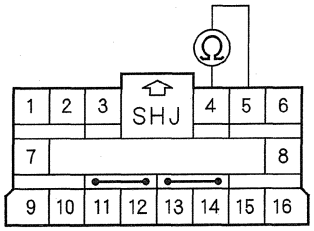

Wire side of female terminals

Is the resistance as specified?

YES—Short in the left side wire harness; replace the left side wire harness, then clear the DTC. ■

NO—Short in the right side wire harness; replace the right side wire harness, then clear the DTC. ■

HONDA

DTC Troubleshooting (cont'd)

DTC 21-8x ("x" can be 0 thru 9 or A thru F): Short to Power in the Driver's Seat Belt Tensioner

Special Tools Required
- SRS inflator simulator 07SAZ-TB4011A
- SRS simulator lead F 07XAZ-SZ30100

NOTE: Before doing this troubleshooting procedure, review SRS Precautions and Procedures (see page 24-14), General Troubleshooting Information (see page 24-23), and Battery Terminal Disconnection and Reconnection (see page 22-91).

1. Clear the DTC memory (see page 24-24).
2. Turn the ignition switch to ON (II), and check that the SRS indicator comes on for about 6 seconds and then goes off.

   Does the SRS indicator stay on, and is DTC 21-8x indicated?

   YES—Go to step 3.

   NO—Intermittent failure, the system is OK at this time. Go to Troubleshooting Intermittent Failures (see page 24-25). If another DTC is indicated, troubleshoot the DTC. ■
3. Turn the ignition switch to LOCK (0).
4. Disconnect the negative cable from the battery, then wait at least 3 minutes.
5. Remove the B-pillar lower trim (see page 20-72), then disconnect the left side wire harness 4P connector (A) from the driver's seat belt tensioner.

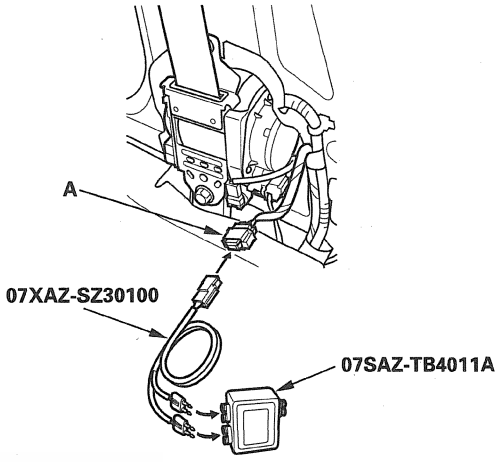

6. Connect the SRS inflator simulator (2 Ω connectors) and simulator lead F to the left side wire harness.
7. Reconnect the negative cable to the battery.
8. Clear the DTC memory.
9. Read the DTC (see page 24-23).

   Is DTC 21-8x indicated?

   YES—Go to step 10.

   NO—Short to power in the driver's seat belt tensioner; replace the driver's seat belt (see page 24-4), then clear the DTC. ■
10. Turn the ignition switch to LOCK (0).
11. Disconnect the negative cable from the battery, then wait at least 3 minutes.

12. Disconnect SRS unit connector B (28P) from the SRS unit (see step 10 on page 24-22).

13. Disconnect the simulator lead from the left side wire harness.

14. Reconnect the negative cable to the battery.

15. Turn the ignition switch to ON (II).

16. Measure the voltage between SRS unit connector B (28P) terminal No. 1 and body ground, and between terminal No. 2 and body ground. There should be less than 0.2 V.

SRS UNIT CONNECTOR B (28P)

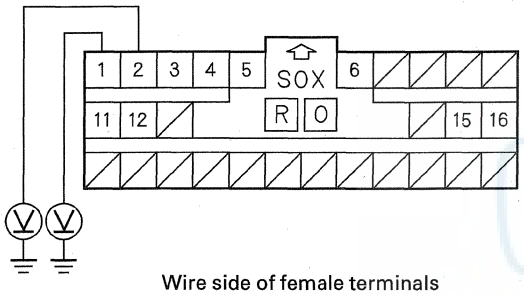

Wire side of female terminals

Is the voltage as specified?

YES—Faulty SRS unit or poor connection at SRS unit connector B (28P) and the SRS unit. Check the connection; if the connection is OK, replace the SRS unit (see page 24-215). ■

NO—Go to step 17.

17. Disconnect right side wire harness 16P connector C604 (A) from the left side wire harness connector C604 (B).

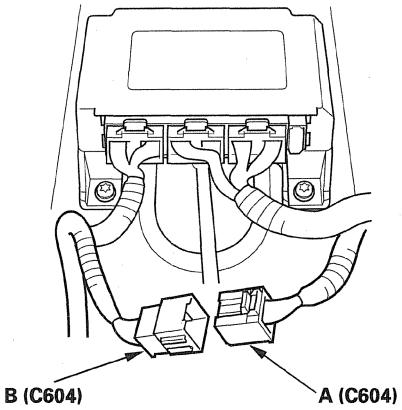

(cont'd)

DTC Troubleshooting (cont'd)

18. Measure the voltage between right side wire harness 16P connector C604 terminal No. 4 and body ground, and between terminal No. 5 and body ground. There should be less than 0.2 V.

RIGHT SIDE WIRE HARNESS 16P CONNECTOR C604

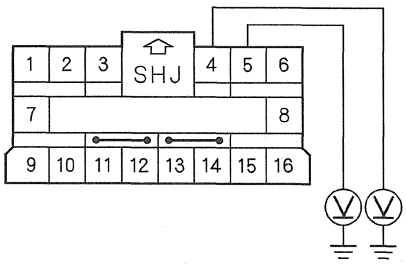

Wire side of female terminals

Is the voltage as specified?

YES—Short to power in the left side wire harness; replace the left side wire harness, then clear the DTC. ■

NO—Short to power in the right side wire harness; replace the right side wire harness, then clear the DTC. ■

DTC 21-9x ("x" can be 0 thru 9 or A thru F): Short to Ground in the Driver's Seat Belt Tensioner

Special Tools Required
- SRS inflator simulator 07SAZ-TB4011A
- SRS simulator lead F 07XAZ-SZ30100

NOTE: Before doing this troubleshooting procedure, review SRS Precautions and Procedures (see page 24-14), General Troubleshooting Information (see page 24-23), and Battery Terminal Disconnection and Reconnection (see page 22-91).

1. Clear the DTC memory (see page 24-24).

2. Turn the ignition switch to ON (II), and check that the SRS indicator comes on for about 6 seconds and then goes off.

   Does the SRS indicator stay on, and is DTC 21-9x indicated?

   YES—Go to step 3.

   NO—Intermittent failure, the system is OK at this time. Go to Troubleshooting Intermittent Failures (see page 24-25). If another DTC is indicated, troubleshoot the DTC. ■

3. Turn the ignition switch to LOCK (0).

4. Disconnect the negative cable from the battery, then wait at least 3 minutes.

5. Remove the B-pillar lower trim (see page 20-72), then disconnect the left side wire harness 4P connector (A) from the driver's seat belt tensioner.

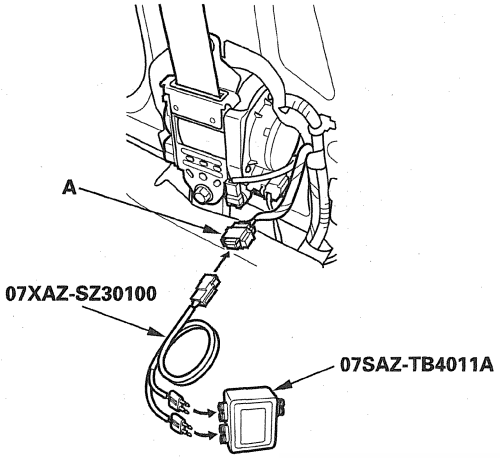

6. Connect the SRS inflator simulator (2 Ω connectors) and simulator lead F to the left side wire harness.

7. Reconnect the negative cable to the battery.

8. Clear the DTC memory.

9. Read the DTC (see page 24-23).

   Is DTC 21-9x indicated?

   YES—Go to step 10.

   NO—Short to ground in the driver's seat belt tensioner; replace the driver's seat belt (see page 24-4), then clear the DTC. ■

10. Turn the ignition switch to LOCK (0).

11. Disconnect the negative cable from the battery, then wait at least 3 minutes.

12. Disconnect SRS unit connector B (28P) from the SRS unit (see step 10 on page 24-22).

13. Disconnect the simulator lead from the left side wire harness.

14. Measure the resistance between SRS unit connector B (28P) terminal No. 1 and body ground, and between terminal No. 2 and body ground. There should be an open circuit or at least 1 MΩ.

SRS UNIT CONNECTOR B (28P)

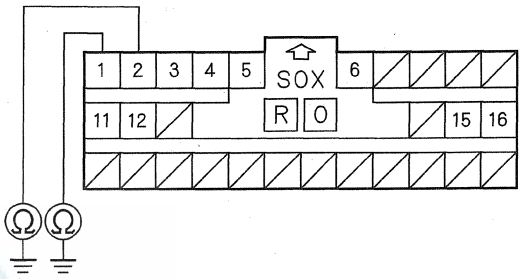

Wire side of female terminals

Is the resistance as specified?

YES—Faulty SRS unit or poor connection at SRS unit connector B (28P) and the SRS unit. Check the connection; if the connection is OK, replace the SRS unit (see page 24-215). ■

NO—Go to step 15.

(cont'd)

DTC Troubleshooting (cont'd)

15. Disconnect right side wire harness 16P connector C604 (A) from the left side wire harness connector C604 (B).

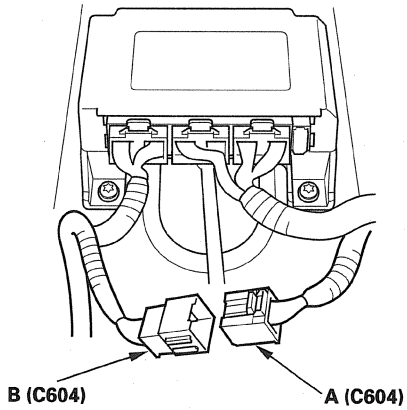

16. Measure the resistance between right side wire harness 16P connector C604 terminal No. 4 and body ground, and between terminal No. 5 and body ground. There should be an open circuit or at least 1 MΩ.

RIGHT SIDE WIRE HARNESS 16P CONNECTOR C604

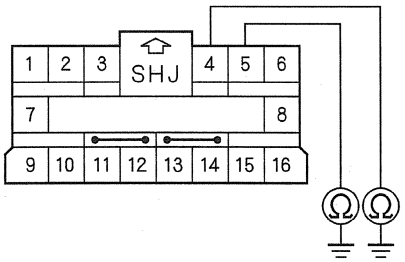

Wire side of female terminals

Is the resistance as specified?

YES—Short to ground in the left side wire harness; replace the left side wire harness, then clear the DTC.■

NO—Short to ground in the right side wire harness; replace the right side wire harness, then clear the DTC.■

DTC 22-1x ("x" can be 0 thru 9 or A thru F): Open in the Front Passenger's Seat Belt Tensioner
DTC 22-2x ("x" can be 0 thru 9 or A thru F): Increased Resistance in the Front Passenger's Seat Belt Tensioner

Special Tools Required
- SRS inflator simulator 07SAZ-TB4011A
- SRS simulator lead F 07XAZ-SZ30100

NOTE: Before doing this troubleshooting procedure, review SRS Precautions and Procedures (see page 24-14), General Troubleshooting Information (see page 24-23), and Battery Terminal Disconnection and Reconnection (see page 22-91).

1. Clear the DTC memory (see page 24-24).
2. Turn the ignition switch to ON (II), and check that the SRS indicator comes on for about 6 seconds and then goes off.

   Does the SRS indicator stay on, and is DTC 22-1x or 22-2x indicated?

   YES—Go to step 3.

   NO—Intermittent failure, the system is OK at this time. Go to Troubleshooting Intermittent Failures (see page 24-25). If another DTC is indicated, troubleshoot the DTC. ■
3. Turn the ignition switch to LOCK (0).
4. Disconnect the negative cable from the battery, then wait at least 3 minutes.
5. Remove the B-pillar lower trim (see page 20-72), then disconnect the right side wire harness 4P connector (A) from the front passenger's seat belt tensioner.

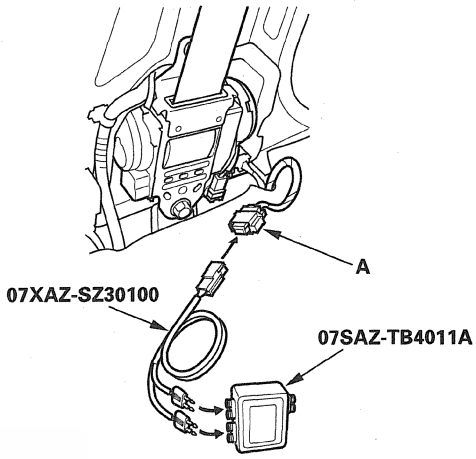

6. Connect the SRS inflator simulator (2 Ω connectors) and simulator lead F to the right side wire harness.
7. Reconnect the negative cable to the battery.
8. Clear the DTC memory.
9. Read the DTC (see page 24-23).

   Is DTC 22-1x or 22-2x indicated?

   YES—Go to step 10.

   NO—Open or increased resistance in the front passenger's seat belt tensioner; replace the front passenger's seat belt (see page 24-4), then clear the DTC. ■
10. Turn the ignition switch to LOCK (0).
11. Disconnect the negative cable from the battery, then wait at least 3 minutes.
12. Disconnect SRS unit connector B (28P) from the SRS unit (see step 10 on page 24-22).

(cont'd)

DTC Troubleshooting (cont'd)

13. Measure the resistance between SRS unit connector B (28P) terminals No. 3 and No. 4. There should be 2.0—3.0 Ω.

SRS UNIT CONNECTOR B (28P)

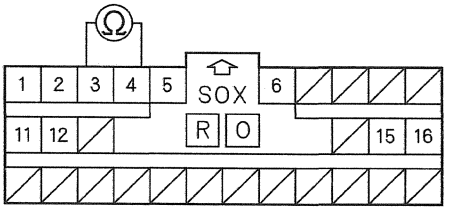

Wire side of female terminals

Is the resistance as specified?

YES—Faulty SRS unit or poor connection at SRS unit connector B (28P) and the SRS unit. Check the connection; if the connection is OK, replace the SRS unit (see page 24-215). ■

NO—Open or increased resistance in the right side wire harness; replace the right side wire harness, then clear the DTC. ■

DTC 22-3x ("x" can be 0 thru 9 or A thru F): Short to Another Wire or Decreased Resistance in the Front Passenger's Seat Belt Tensioner

Special Tools Required
- SRS inflator simulator 07SAZ-TB4011A
- SRS simulator lead F 07XAZ-SZ30100

NOTE: Before doing this troubleshooting procedure, review SRS Precautions and Procedures (see page 24-14), General Troubleshooting Information (see page 24-23), and Battery Terminal Disconnection and Reconnection (see page 22-91).

1. Clear the DTC memory (see page 24-24).

2. Turn the ignition switch to ON (II), and check that the SRS indicator comes on for about 6 seconds and then goes off.

   Does the SRS indicator stay on, and is DTC 22-3x indicated?

   YES—Go to step 3.

   NO—Intermittent failure, the system is OK at this time. Go to Troubleshooting Intermittent Failures (see page 24-25). If another DTC is indicated, troubleshoot the DTC. ■

3. Turn the ignition switch to LOCK (0).

4. Disconnect the negative cable from the battery, then wait at least 3 minutes.

5. Remove the B-pillar lower trim (see page 20-72), then disconnect the right side wire harness 4P connector (A) from the front passenger's seat belt tensioner.

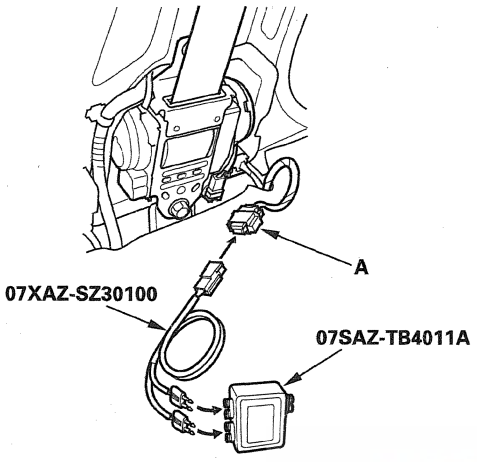

6. Connect the SRS inflator simulator (2 Ω connectors) and simulator lead F to the right side wire harness.

7. Reconnect the negative cable to the battery.

8. Clear the DTC memory.

9. Read the DTC (see page 24-23).

   Is DTC 22-3x indicated?

   YES—Go to step 10.

   NO—Short in the front passenger's seat belt tensioner; replace the front passenger's seat belt (see page 24-4), then clear the DTC. ■

10. Turn the ignition switch to LOCK (0).

11. Disconnect the negative cable from the battery, then wait at least 3 minutes.

12. Disconnect SRS unit connector B (28P) from the SRS unit (see step 10 on page 24-22).

13. Disconnect the simulator lead from the right side wire harness.

14. Measure the resistance between SRS unit connector B (28P) terminals No. 3 and No. 4. There should be an open circuit or at least 1 MΩ.

SRS UNIT CONNECTOR B (28P)

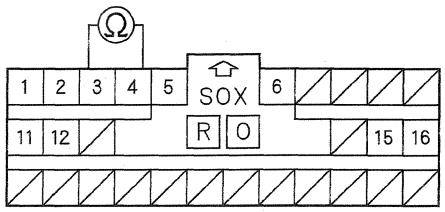

Wire side of female terminals

Is the resistance as specified?

YES—Faulty SRS unit or poor connection at SRS unit connector B (28P) and the SRS unit. Check the connection; if the connection is OK, replace the SRS unit (see page 24-215). ■

NO—Short to another wire in the right side wire harness; replace the right side wire harness, then clear the DTC. ■

HONDA

DTC Troubleshooting (cont'd)

DTC 22-8x ("x" can be 0 thru 9 or A thru F): Short to Power in the Front Passenger's Seat Belt Tensioner

Special Tools Required
- SRS inflator simulator 07SAZ-TB4011A
- SRS simulator lead F 07XAZ-SZ30100

NOTE: Before doing this troubleshooting procedure, review SRS Precautions and Procedures (see page 24-14), General Troubleshooting Information (see page 24-23), and Battery Terminal Disconnection and Reconnection (see page 22-91).

1. Clear the DTC memory (see page 24-24).
2. Turn the ignition switch to ON (II), and check that the SRS indicator comes on for about 6 seconds and then goes off.

   Does the SRS indicator stay on, and is DTC 22-8x indicated?

   YES—Go to step 3.

   NO—Intermittent failure, the system is OK at this time. Go to Troubleshooting Intermittent Failures (see page 24-25). If another DTC is indicated, troubleshoot the DTC. ■
3. Turn the ignition switch to LOCK (0).
4. Disconnect the negative cable from the battery, then wait at least 3 minutes.
5. Remove the B-pillar lower trim (see page 20-72), then disconnect the right side wire harness 4P connector (A) from the front passenger's seat belt tensioner.

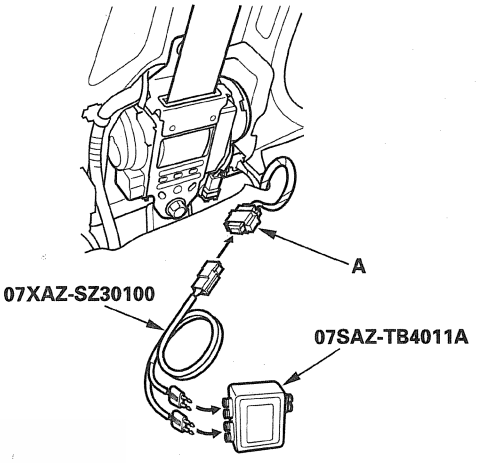

6. Connect the SRS inflator simulator (2 Ω connectors) and simulator lead F to the right side wire harness.
7. Reconnect the negative cable to the battery.
8. Clear the DTC memory.
9. Read the DTC (see page 24-23).

   Is DTC 22-8x indicated?

   YES—Go to step 10.

   NO—Short to power in the front passenger's seat belt tensioner; replace the front passenger's seat belt (see page 24-4), then clear the DTC. ■

10. Turn the ignition switch to LOCK (0).

11. Disconnect the negative cable from the battery, then wait at least 3 minutes.

12. Disconnect SRS unit connector B (28P) from the SRS unit (see step 10 on page 24-22).

13. Disconnect the simulator lead from the right side wire harness.

14. Reconnect the negative cable to the battery.

15. Turn the ignition switch to ON (II).

16. Measure the voltage between SRS unit connector B (28P) terminal No. 3 and body ground, and between terminal No. 4 and body ground. There should be less than 0.2 V.

SRS UNIT CONNECTOR B (28P)

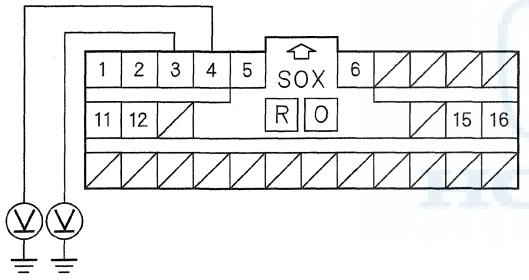

Wire side of female terminals

Is the voltage as specified?

YES—Faulty SRS unit or poor connection at SRS unit connector B (28P) and the SRS unit. Check the connection; if the connection is OK, replace the SRS unit (see page 24-215). ■

NO—Short to power in the right side wire harness; replace the right side wire harness, then clear the DTC. ■

DTC 22-9x ("x" can be 0 thru 9 or A thru F): Short to Ground in the Front Passenger's Seat Belt Tensioner

Special Tools Required
- SRS inflator simulator 07SAZ-TB4011A
- SRS simulator lead F 07XAZ-SZ30100

NOTE: Before doing this troubleshooting procedure, review SRS Precautions and Procedures (see page 24-14), General Troubleshooting Information (see page 24-23), and Battery Terminal Disconnection and Reconnection (see page 22-91).

1. Clear the DTC memory (see page 24-24).

2. Turn the ignition switch to ON (II), and check that the SRS indicator comes on for about 6 seconds and then goes off.

Does the SRS indicator stay on, and is DTC 22-9x indicated?

YES—Go to step 3.

NO—Intermittent failure, the system is OK at this time. Go to Troubleshooting Intermittent Failures (see page 24-25). If another DTC is indicated, troubleshoot the DTC. ■

(cont'd)

DTC Troubleshooting (cont'd)

3. Turn the ignition switch to LOCK (0).
4. Disconnect the negative cable from the battery, then wait at least 3 minutes.
5. Remove the B-pillar lower trim (see page 20-72), then disconnect the right side wire harness 4P connector (A) from the front passenger's seat belt tensioner.

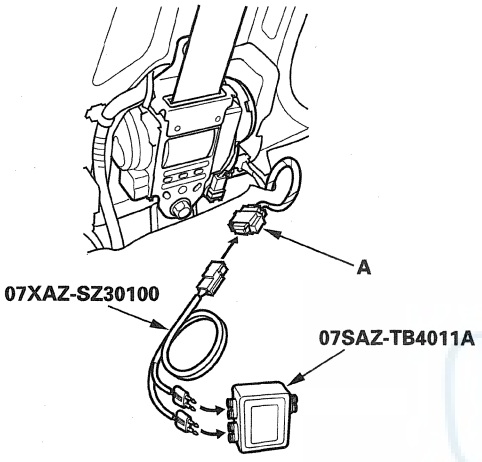

6. Connect the SRS inflator simulator (2 Ω connectors) and simulator lead F to the right side wire harness.
7. Reconnect the negative cable to the battery.
8. Clear the DTC memory.

9. Read the DTC (see page 24-23).

   Is DTC 22-9x indicated?

   YES—Go to step 10.

   NO—Short to ground in the front passenger's seat belt tensioner; replace the front passenger's seat belt (see page 24-4), then clear the DTC. ■

10. Turn the ignition switch to LOCK (0).

11. Disconnect the negative cable from the battery, then wait at least 3 minutes.

12. Disconnect SRS unit connector B (28P) from the SRS unit (see step 10 on page 24-22).

13. Disconnect the simulator lead from the right side wire harness.

14. Measure the resistance between SRS unit connector B (28P) terminal No. 3 and body ground, and between terminal No. 4 and body ground. There should be an open circuit or at least 1 MΩ.

SRS UNIT CONNECTOR B (28P)

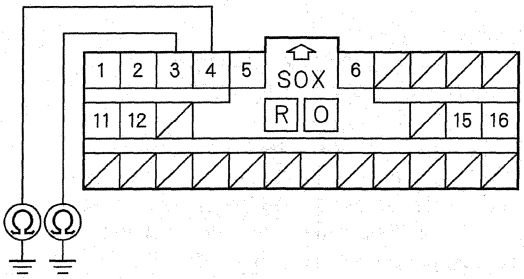

Wire side of female terminals

Is the resistance as specified?

YES—Faulty SRS unit or poor connection at SRS unit connector B (28P) and the SRS unit. Check the connection; if the connection is OK, replace the SRS unit (see page 24-215). ■

NO—Short to ground in the right side wire harness; replace the right side wire harness, then clear the DTC. ■

DTC Troubleshooting (cont'd)

DTC 31-1x ("x" can be 0 thru 9 or A thru F): Open in the Driver's Side Airbag Inflator

DTC 31-2x ("x" can be 0 thru 9 or A thru F): Increased Resistance in the Driver's Side Airbag Inflator

Special Tools Required
- SRS inflator simulator 07SAZ-TB4011A
- SRS simulator lead L 070AZ-SNAA300

NOTE: Before doing this troubleshooting procedure, review SRS Precautions and Procedures (see page 24-14), General Troubleshooting Information (see page 24-23), and Battery Terminal Disconnection and Reconnection (see page 22-91).

1. Clear the DTC memory (see page 24-24).
2. Turn the ignition switch to ON (II), and check that the SRS indicator comes on for about 6 seconds and then goes off.

   Does the SRS indicator stay on, and is DTC 31-1x or 31-2x indicated?

   YES—Go to step 3.

   NO—Intermittent failure, the system is OK at this time. Go to Troubleshooting Intermittent Failures (see page 24-25). If another DTC is indicated, troubleshoot the DTC. ■
3. Turn the ignition switch to LOCK (0).
4. Disconnect the negative cable from the battery, then wait at least 3 minutes.
5. Disconnect the left side wire harness 2P connector (A) from the driver's side airbag connector (B).

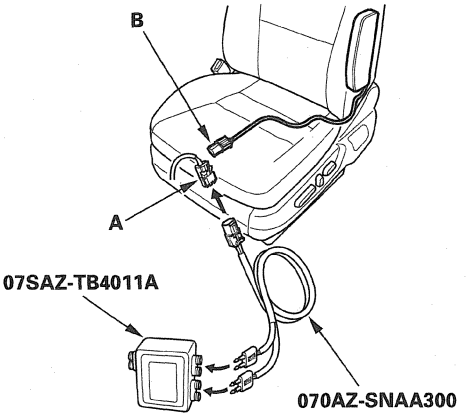

6. Connect the SRS inflator simulator (2 Ω connectors) and simulator lead L to the left side wire harness.

7. Reconnect the negative cable to the battery.

8. Clear the DTC memory.

9. Read the DTC (see page 24-23).

   Is DTC 31-1x or 31-2x indicated?

   YES—Go to step 10.

   NO—Open or increased resistance in the driver's side airbag inflator; replace the driver's side airbag (see page 24-202), then clear the DTC. ■

10. Turn the ignition switch to LOCK (0).

11. Disconnect the negative cable from the battery, then wait at least 3 minutes.

12. Disconnect SRS unit connector C (28P) from the SRS unit (see step 10 on page 24-22).

13. Disconnect the SRS inflator simulator from the SRS simulator lead. Do not disconnect the simulator lead from the left side wire harness 2P connector.

14. Measure the resistance between the terminals of the black SRS simulator lead (A). There should be less than 1.0 Ω.

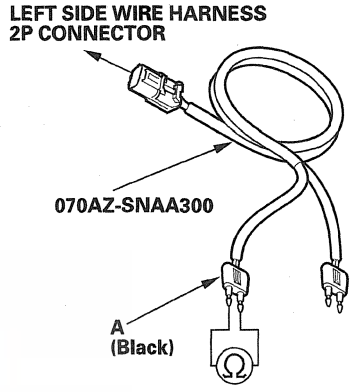

Is the resistance as specified?

YES—Faulty SRS unit or poor connection at SRS unit connector C (28P) and the SRS unit. Check the connection; if the connection is OK, replace the SRS unit (see page 24-215). ■

NO—Go to step 15.

(cont'd)

DTC Troubleshooting (cont'd)

15. Disconnect right side wire harness 16P connector C604 (A) from the left side wire harness connector C604 (B).

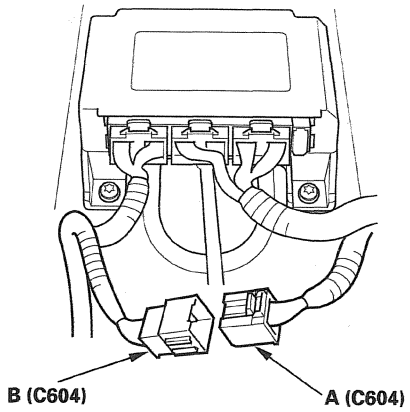

16. Measure the resistance between right side wire harness 16P connector C604 terminals No. 1 and No. 7. There should be less than 1.0 Ω.

RIGHT SIDE WIRE HARNESS 16P CONNECTOR C604

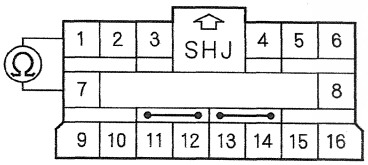

Wire side of female terminals

Is the resistance as specified?

YES—Open or increased resistance in the left side wire harness; replace left side wire harness, then clear the DTC. ■

NO—Open or increased resistance in the right side wire harness; replace the right side wire harness, then clear the DTC. ■

DTC 31-3x ("x" can be 0 thru 9 or A thru F): Short to Another Wire or Decreased Resistance in the Driver's Side Airbag Inflator

Special Tools Required
- SRS inflator simulator 07SAZ-TB4011A
- SRS simulator lead L 070AZ-SNAA300
- SRS short canceller 070AZ-SAA0100

NOTE: Before doing this troubleshooting procedure, review SRS Precautions and Procedures (see page 24-14), General Troubleshooting Information (see page 24-23), and Battery Terminal Disconnection and Reconnection (see page 22-91).

1. Clear the DTC memory (see page 24-24).

2. Turn the ignition switch to ON (II), and check that the SRS indicator comes on for about 6 seconds and then goes off.

   Does the SRS indicator stay on, and is DTC 31-3x indicated?

   YES—Go to step 3.

   NO—Intermittent failure, the system is OK at this time. Go to Troubleshooting Intermittent Failures (see page 24-25). If another DTC is indicated, troubleshoot the DTC. ■

3. Turn the ignition switch to LOCK (0).

4. Disconnect the negative cable from the battery, then wait at least 3 minutes.

5. Disconnect the left side wire harness 2P connector (A) from the driver's side airbag connector (B).

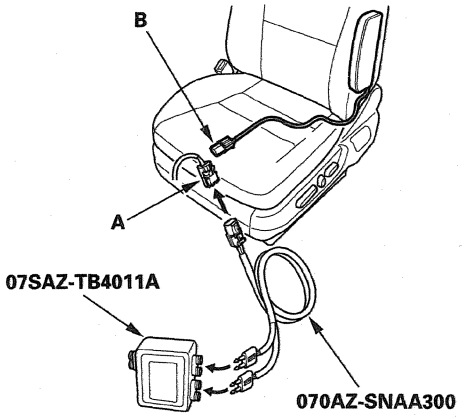

6. Connect the SRS inflator simulator (2 Ω connectors) and simulator lead L to the left side wire harness.

7. Reconnect the negative cable to the battery.

8. Clear the DTC memory.

9. Read the DTC (see page 24-23).

   Is DTC 31-3x indicated?

   YES—Go to step 10.

   NO—Short to another wire in the driver's side airbag inflator; replace the driver's side airbag (see page 24-202), then clear the DTC. ■

10. Turn the ignition switch to LOCK (0).

11. Disconnect the negative cable from the battery, then wait at least 3 minutes.

12. Disconnect SRS unit connector C (28P) from the SRS unit (see step 10 on page 24-22).

13. Disconnect the SRS inflator simulator from the SRS simulator lead. Do not disconnect the simulator lead from the left side wire harness 2P connector.

14. Connect the SRS short canceller (070AZ-SAA0100) to SRS unit connector C (28P) terminals No. 1 and No. 2 (see page 24-19).

15. Measure the resistance between the terminals of the black SRS simulator lead (A). There should be an open circuit or at least 1 MΩ.

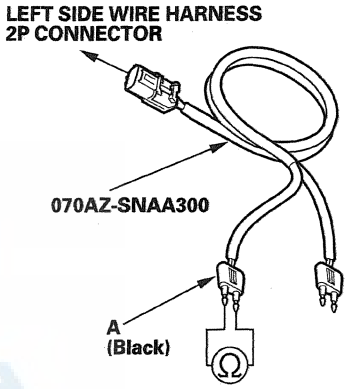

   Is the resistance as specified?

   YES—Faulty SRS unit or poor connection at SRS unit connector C (28P) and the SRS unit. Check the connection; if the connection is OK, replace the SRS unit (see page 24-215). ■

   NO—Go to step 16.

(cont'd)

DTC Troubleshooting (cont'd)

16. Disconnect right side wire harness 16P connector C604 (A) from the left side wire harness connector C604 (B).

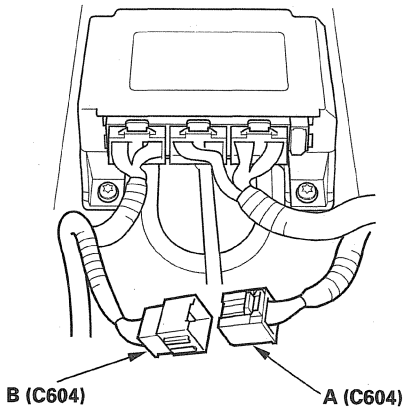

17. Measure the resistance between right side wire harness 16P connector C604 terminal No. 1 and body ground, and between terminal No. 7 and body ground. There should be an open circuit or at least 1 MΩ.

RIGHT SIDE WIRE HARNESS 16P CONNECTOR C604

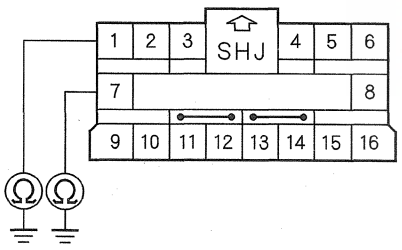

Wire side of female terminals

Is the resistance as specified?

YES—Short to ground in the left side wire harness; replace the left side wire harness, then clear the DTC. ■

NO—Short to ground in the right side wire harness; replace the right side wire harness, then clear the DTC. ■

DTC 31-8x ("x" can be 0 thru 9 or A thru F): Short to Power in the Driver's Side Airbag Inflator

Special Tools Required
- SRS inflator simulator 07SAZ-TB4011A
- SRS simulator lead L 070AZ-SNAA300

NOTE: Before doing this troubleshooting procedure, review SRS Precautions and Procedures (see page 24-14), General Troubleshooting Information (see page 24-23), and Battery Terminal Disconnection and Reconnection (see page 22-91).

1. Clear the DTC memory (see page 24-24).

2. Turn the ignition switch to ON (II), and check that the SRS indicator comes on for about 6 seconds and then goes off.

   Does the SRS indicator stay on, and is DTC 31-8x indicated?

   YES—Go to step 3.

   NO—Intermittent failure, the system is OK at this time. Go to Troubleshooting Intermittent Failures (see page 24-25). If another DTC is indicated, troubleshoot the DTC. ■

3. Turn the ignition switch to LOCK (0).

4. Disconnect the negative cable from the battery, then wait at least 3 minutes.

5. Disconnect the left side wire harness 2P connector (A) from the driver's side airbag connector (B).

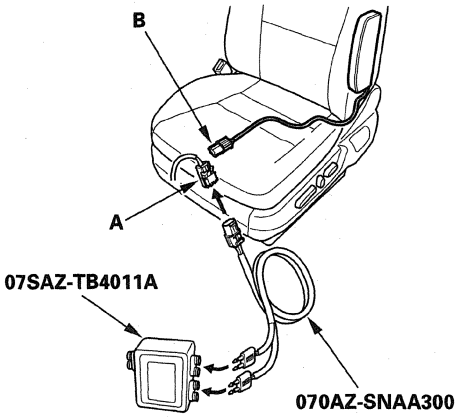

6. Connect the SRS inflator simulator (2 Ω connectors) and simulator lead L to the left side wire harness.

7. Reconnect the negative cable to the battery.

8. Clear the DTC memory.

9. Read the DTC (see page 24-23).

   Is DTC 31-8x indicated?

   YES—Go to step 10.

   NO—Short to power in the driver's side airbag inflator; replace the driver's side airbag (see page 24-202), then clear the DTC. ■

10. Turn the ignition switch to LOCK (0).

11. Disconnect the negative cable from the battery, then wait at least 3 minutes.

12. Disconnect SRS unit connector C (28P) from the SRS unit (see step 10 on page 24-22).

13. Disconnect the SRS inflator simulator from the SRS simulator lead. Do not disconnect the simulator lead from the left side wire harness 2P connector.

14. Reconnect the negative cable to the battery.

15. Turn the ignition switch to ON (II).

16. Measure the voltage between each terminal of the black SRS simulator lead (A) and body ground. There should be less than 0.2 V.

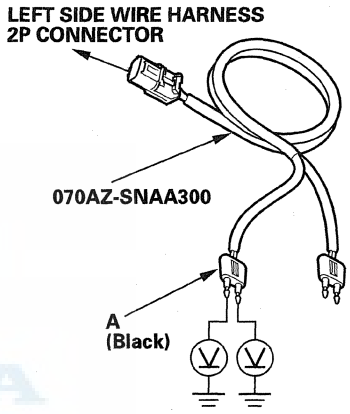

Is the voltage as specified?

YES—Faulty SRS unit or poor connection at SRS unit connector C (28P) and the SRS unit. Check the connection; if the connection is OK, replace the SRS unit (see page 24-215). ■

NO—Go to step 17.

(cont'd)

DTC Troubleshooting (cont'd)

17. Disconnect right side wire harness 16P connector C604 (A) from the left side wire harness connector C604 (B).

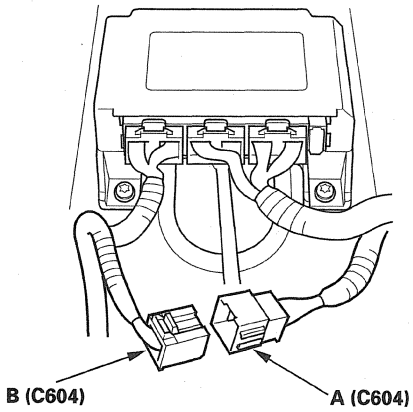

18. Measure the voltage between right side wire harness 16P connector C604 terminal No. 1 and body ground, and between terminal No. 7 and body ground. There should be less than 0.2 V.

RIGHT SIDE WIRE HARNESS 16P CONNECTOR C604

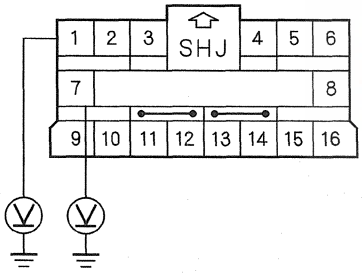

Wire side of female terminals

Is the voltage as specified?

YES—Short to power in the left side wire harness; replace the left side wire harness, then clear the DTC. ■

NO—Short to power in the right side wire harness; replace the right side wire harness, then clear the DTC. ■

DTC 31-9x ("x" can be 0 thru 9 or A thru F): Short to Ground in the Driver's Side Airbag Inflator

Special Tools Required
- SRS inflator simulator 07SAZ-TB4011A
- SRS simulator lead L 070AZ-SNAA300

NOTE: Before doing this troubleshooting procedure, review SRS Precautions and Procedures (see page 24-14), General Troubleshooting Information (see page 24-23), and Battery Terminal Disconnection and Reconnection (see page 22-91).

1. Clear the DTC memory (see page 24-24).

2. Turn the ignition switch to ON (II), and check that the SRS indicator comes on for about 6 seconds and then goes off.

   Does the SRS indicator stay on, and is DTC 31-9x indicated?

   YES—Go to step 3.

   NO—Intermittent failure, the system is OK at this time. Go to Troubleshooting Intermittent Failures (see page 24-25). If another DTC is indicated, troubleshoot the DTC. ■

3. Turn the ignition switch to LOCK (0).

4. Disconnect the negative cable from the battery, then wait at least 3 minutes.

5. Disconnect the left side wire harness 2P connector (A) from the driver's side airbag connector (B).

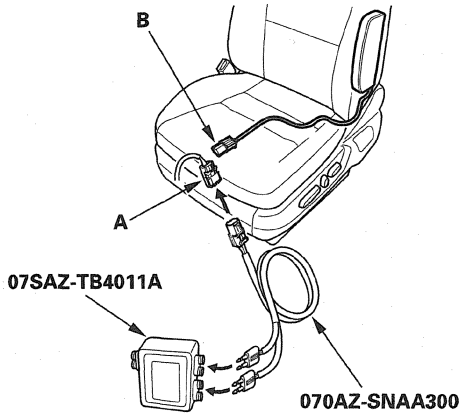

6. Connect the SRS inflator simulator (2 Ω connectors) and simulator lead L to the left side wire harness.

7. Reconnect the negative cable to the battery.

8. Clear the DTC memory.

9. Read the DTC (see page 24-23).

   Is DTC 31-9x indicated?

   YES—Go to step 10.

   NO—Short to ground in the driver's side airbag inflator; replace the driver's side airbag (see page 24-202), then clear the DTC. ■

10. Turn the ignition switch to LOCK (0).

11. Disconnect the negative cable from the battery, then wait at least 3 minutes.

12. Disconnect SRS unit connector C (28P) from the SRS unit (see step 10 on page 24-22).

13. Disconnect the SRS inflator simulator from the SRS simulator lead. Do not disconnect the simulator lead from the left side wire harness 2P connector.

14. Measure the resistance between each terminal of the black SRS simulator lead (A) and body ground. There should be an open circuit or at least 1 MΩ.

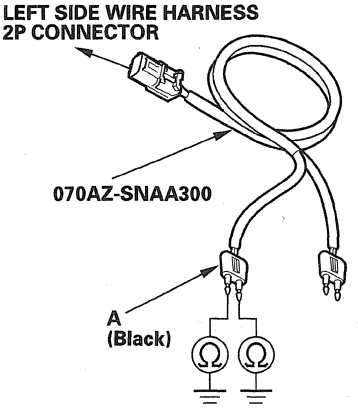

Is the resistance as specified?

YES—Faulty SRS unit or poor connection at SRS unit connector C (28P) and the SRS unit. Check the connection; if the connection is OK, replace the SRS unit (see page 24-215). ■

NO—Go to step 15.

(cont'd)

DTC Troubleshooting (cont'd)

15. Disconnect right side wire harness 16P connector C604 (A) from the left side wire harness connector C604 (B).

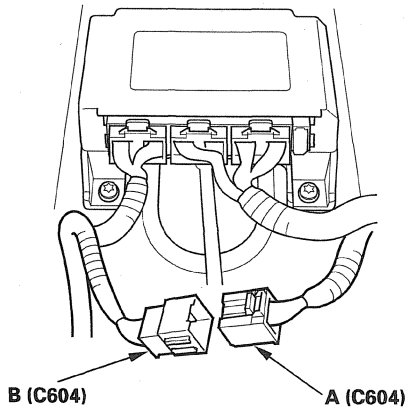

16. Measure the resistance between right side wire harness 16P connector C604 terminal No. 1 and body ground, and between terminal No. 7 and body ground. There should be an open circuit or at least 1 MΩ.

RIGHT SIDE WIRE HARNESS 16P CONNECTOR C604

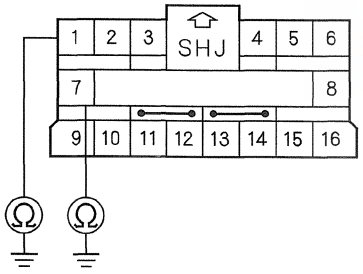

Wire side of female terminals

Is the resistance as specified?

YES—Short to ground in the left side wire harness; replace the left side wire harness, then clear the DTC. ■

NO—Short to ground in the right side wire harness; replace the right side wire harness, then clear the DTC. ■

DTC 32-1x ("x" can be 0 thru 9 or A thru F): Open in the Front Passenger's Side Airbag Inflator
DTC 32-2x ("x" can be 0 thru 9 or A thru F): Increased Resistance in the Front Passenger's Side Airbag Inflator

Special Tools Required
- SRS inflator simulator 07SAZ-TB4011A
- SRS simulator lead L 070AZ-SNAA300

NOTE: Before doing this troubleshooting procedure, review SRS Precautions and Procedures (see page 24-14), General Troubleshooting Information (see page 24-23), and Battery Terminal Disconnection and Reconnection (see page 22-91).

1. Clear the DTC memory (see page 24-24).

2. Turn the ignition switch to ON (II), and check that the SRS indicator comes on for about 6 seconds and then goes off.

   Does the SRS indicator stay on, and is DTC 32-1x or 32-2x indicated?

   YES—Go to step 3.

   NO—Intermittent failure, the system is OK at this time. Go to Troubleshooting Intermittent Failures (see page 24-25). If another DTC is indicated, troubleshoot the DTC. ■

3. Turn the ignition switch to LOCK (0).

4. Disconnect the negative cable from the battery, then wait at least 3 minutes.

5. Disconnect the right side wire harness 2P connector (A) from the front passenger's side airbag connector (B).

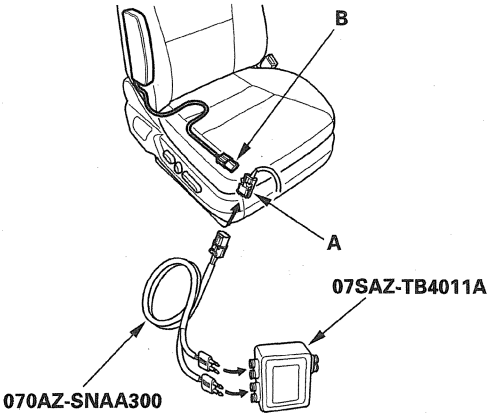

6. Connect the SRS inflator simulator (2 Ω connectors) and simulator lead L to the right side wire harness.

7. Reconnect the negative cable to the battery.

8. Clear the DTC memory.

9. Read the DTC (see page 24-23).

   Is DTC 32-1x or 32-2x indicated?

   YES—Go to step 10.

   NO—Open or increased resistance in the front passenger's side airbag inflator; replace the front passenger's side airbag (see page 24-202), then clear the DTC. ■

10. Turn the ignition switch to LOCK (0).

11. Disconnect the negative cable from the battery, then wait at least 3 minutes.

12. Disconnect SRS unit connector C (28P) from the SRS unit (see step 10 on page 24-22).

13. Disconnect the SRS inflator simulator from the SRS simulator lead. Do not disconnect the simulator lead from the right side wire harness 2P connector.

14. Measure the resistance between the terminals of the black SRS simulator lead (A). There should be less than 1.0 Ω.

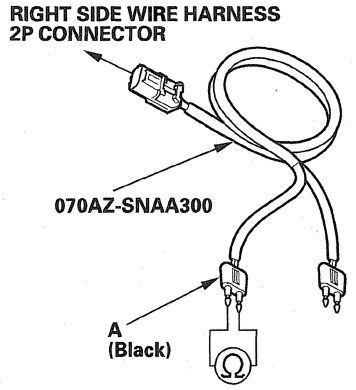

Is the resistance as specified?

YES—Faulty SRS unit or poor connection at SRS unit connector C (28P) and the SRS unit. Check the connection; if the connection is OK, replace the SRS unit (see page 24-215). ■

NO—Open or increased resistance in the right side wire harness; replace the right side wire harness, then clear the DTC. ■

DTC Troubleshooting (cont'd)

DTC 32-3x ("x" can be 0 thru 9 or A thru F): Short to Another Wire or Decreased Resistance in the Front Passenger's Side Airbag Inflator

Special Tools Required
- SRS inflator simulator 07SAZ-TB4011A
- SRS simulator lead L 070AZ-SNAA300
- SRS short canceller 070AZ-SAA0100

NOTE: Before doing this troubleshooting procedure, review SRS Precautions and Procedures (see page 24-14), General Troubleshooting Information (see page 24-23), and Battery Terminal Disconnection and Reconnection (see page 22-91).

1. Clear the DTC memory (see page 24-24).
2. Turn the ignition switch to ON (II), and check that the SRS indicator comes on for about 6 seconds and then goes off.

   Does the SRS indicator stay on, and is DTC 32-3x indicated?

   YES—Go to step 3.

   NO—Intermittent failure, the system is OK at this time. Go to Troubleshooting Intermittent Failures (see page 24-25). If another DTC is indicated, troubleshoot the DTC. ■
3. Turn the ignition switch to LOCK (0).
4. Disconnect the negative cable from the battery, then wait at least 3 minutes.
5. Disconnect the right side wire harness 2P connector (A) from the front passenger's side airbag connector (B).

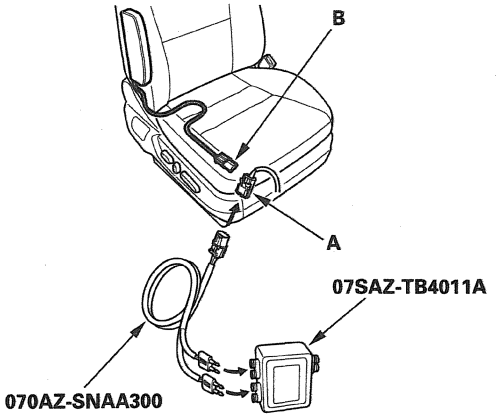

6. Connect the SRS inflator simulator (2 Ω connectors) and simulator lead L to the right side wire harness.
7. Reconnect the negative cable to the battery.
8. Clear the DTC memory.
9. Read the DTC (see page 24-23).

   Is DTC 32-3x indicated?

   YES—Go to step 10.

   NO—Short to another wire in the front passenger's side airbag inflator; replace the front passenger's side airbag (see page 24-202), then clear the DTC. ■
10. Turn the ignition switch to LOCK (0).
11. Disconnect the negative cable from the battery, then wait at least 3 minutes.
12. Disconnect SRS unit connector C (28P) from the SRS unit (see step 10 on page 24-22).
13. Disconnect the SRS inflator simulator from the SRS simulator lead. Do not disconnect the simulator lead from the right side wire harness 2P connector.
14. Connect the SRS short canceller (070AZ-SAA0100) to the SRS unit connector C (28P) terminals No. 3 and No. 4 (see page 24-19).

15. Measure the resistance between the terminals of the black SRS simulator lead (A). There should be an open circuit or at least 1 MΩ.

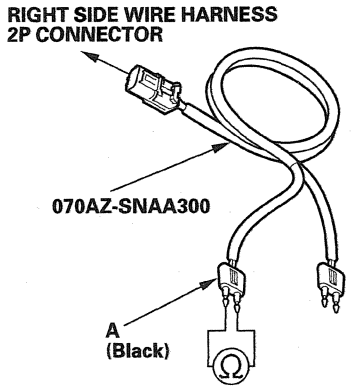

Is the resistance as specified?

YES—Faulty SRS unit or poor connection at SRS unit connector C (28P) and the SRS unit. Check the connection; if the connection is OK, replace the SRS unit (see page 24-215). ■

NO—Short to another wire in the right side wire harness; replace the right side wire harness, then clear the DTC. ■

DTC 32-8x ("x" can be 0 thru 9 or A thru F): Short to Power in the Front Passenger's Side Airbag Inflator

Special Tools Required
- SRS inflator simulator 07SAZ-TB4011A
- SRS simulator lead L 070AZ-SNAA300

NOTE: Before doing this troubleshooting procedure, review SRS Precautions and Procedures (see page 24-14), General Troubleshooting Information (see page 24-23), and Battery Terminal Disconnection and Reconnection (see page 22-91).

1. Clear the DTC memory (see page 24-24).
2. Turn the ignition switch to ON (II), and check that the SRS indicator comes on for about 6 seconds and then goes off.

   Does the SRS indicator stay on, and is DTC 32-8x indicated?

   YES—Go to step 3.

   NO—Intermittent failure, the system is OK at this time. Go to Troubleshooting Intermittent Failures (see page 24-25). If another DTC is indicated, troubleshoot the DTC. ■
3. Turn the ignition switch to LOCK (0).
4. Disconnect the negative cable from the battery, then wait at least 3 minutes.

(cont'd)

DTC Troubleshooting (cont'd)

5. Disconnect the right side wire harness 2P connector (A) from the front passenger's side airbag connector (B).

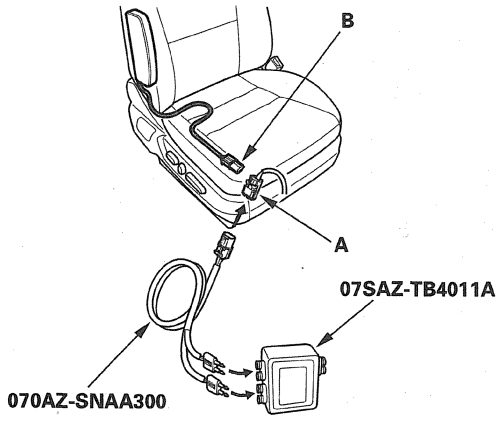

6. Connect the SRS inflator simulator (2 Ω connectors) and simulator lead L to the right side wire harness.
7. Reconnect the negative cable to the battery.
8. Clear the DTC memory.
9. Read the DTC (see page 24-23).

   Is DTC 32-8x indicated?

   YES—Go to step 10.

   NO—Short to power in the front passenger's side airbag inflator; replace the front passenger's side airbag (see page 24-202), then clear the DTC. ■
10. Turn the ignition switch to LOCK (0).
11. Disconnect the negative cable from the battery, then wait at least 3 minutes.
12. Disconnect SRS unit connector C (28P) from the SRS unit (see step 10 on page 24-22).
13. Disconnect the SRS inflator simulator from the SRS simulator lead. Do not disconnect the simulator lead from the right side wire harness 2P connector.
14. Reconnect the negative cable to the battery.
15. Turn the ignition switch to ON (II).

16. Measure the voltage between each terminal of the black SRS simulator lead (A) and body ground. There should be less than 0.2 V.

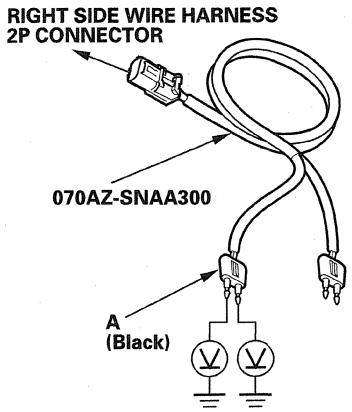

Is the voltage as specified?

YES—Faulty SRS unit or poor connection at SRS unit connector C (28P) and the SRS unit. Check the connection; if the connection is OK, replace the SRS unit (see page 24-215). ■

NO—Short to power in the right side wire harness; replace the right side wire harness, then clear the DTC. ■

DTC 32-9x ("x" can be 0 thru 9 or A thru F): Short to Ground in the Front Passenger's Side Airbag Inflator

Special Tools Required
- SRS inflator simulator 07SAZ-TB4011A
- SRS simulator lead L 070AZ-SNAA300

NOTE: Before doing this troubleshooting procedure, review SRS Precautions and Procedures (see page 24-14), General Troubleshooting Information (see page 24-23), and Battery Terminal Disconnection and Reconnection (see page 22-91).

1. Clear the DTC memory (see page 24-24).

2. Turn the ignition switch to ON (II), and check that the SRS indicator comes on for about 6 seconds and then goes off.

   Does the SRS indicator stay on, and is DTC 32-9x indicated?

   YES—Go to step 3.

   NO—Intermittent failure, the system is OK at this time. Go to Troubleshooting Intermittent Failures (see page 24-25). If another DTC is indicated, troubleshoot the DTC. ■

3. Turn the ignition switch to LOCK (0).

4. Disconnect the negative cable from the battery, then wait at least 3 minutes.

(cont'd)

DTC Troubleshooting (cont'd)

5. Disconnect the right side wire harness 2P connector (A) from the front passenger's side airbag connector (B).

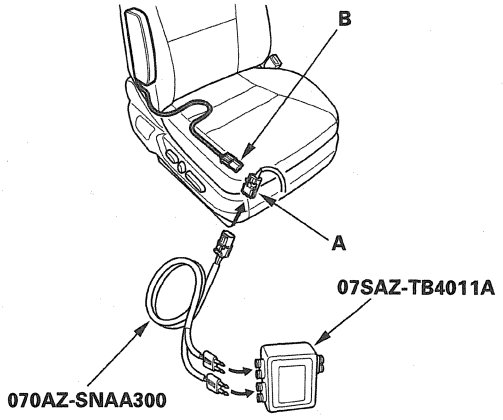

6. Connect the SRS inflator simulator (2 Ω connectors) and simulator lead L to the right side wire harness.

7. Reconnect the negative cable to the battery.

8. Clear the DTC memory.

9. Read the DTC (see page 24-23).

   Is DTC 32-9x indicated?

   YES—Go to step 10.

   NO—Short to ground in the front passenger's side airbag inflator; replace the front passenger's side airbag (see page 24-202), then clear the DTC. ■

10. Turn the ignition switch to LOCK (0).

11. Disconnect the negative cable from the battery, then wait at least 3 minutes.

12. Disconnect SRS unit connector C (28P) from the SRS unit (see step 10 on page 24-22).

13. Disconnect the SRS inflator simulator from the SRS simulator lead. Do not disconnect the simulator lead from the right side wire harness 2P connector.

14. Measure the resistance between each terminal of the black SRS simulator lead (A) and body ground. There should be an open circuit or at least 1 MΩ.

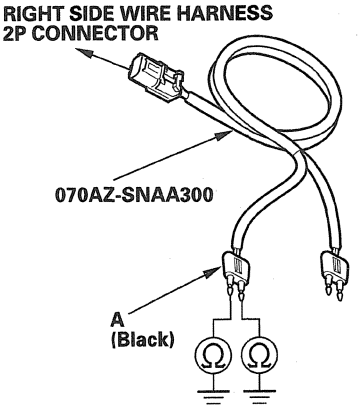

Is the resistance as specified?

YES—Faulty SRS unit or poor connection at SRS unit connector C (28P) and the SRS unit. Check the connection; if the connection is OK, replace the SRS unit (see page 24-215). ■

NO—Short to ground in the right side wire harness; replace the right side wire harness, then clear the DTC. ■

DTC 33-1x ("x" can be 0 thru 9 or A thru F): Open in the Left Side Curtain Airbag Inflator

DTC 33-2x ("x" can be 0 thru 9 or A thru F): Increased Resistance in the Left Side Curtain Airbag Inflator

Special Tools Required
- SRS inflator simulator 07SAZ-TB4011A
- SRS simulator lead E 07XAZ-S1A0200

NOTE: Before doing this troubleshooting procedure, review SRS Precautions and Procedures (see page 24-14), General Troubleshooting Information (see page 24-23), and Battery Terminal Disconnection and Reconnection (see page 22-91).

1. Clear the DTC memory (see page 24-24).
2. Turn the ignition switch to ON (II), and check that the SRS indicator comes on for about 6 seconds and then goes off.

   Does the SRS indicator stay on, and is DTC 33-1x or 33-2x indicated?

   YES—Go to step 3.

   NO—Intermittent failure, the system is OK at this time. Go to Troubleshooting Intermittent Failures (see page 24-25). If another DTC is indicated, troubleshoot the DTC. ■
3. Turn the ignition switch to LOCK (0).
4. Disconnect the negative cable from the battery, then wait at least 3 minutes.
5. Remove the C-pillar trim (see page 20-76), then disconnect the left side wire harness 2P connector (A) from the left side curtain airbag connector (B).

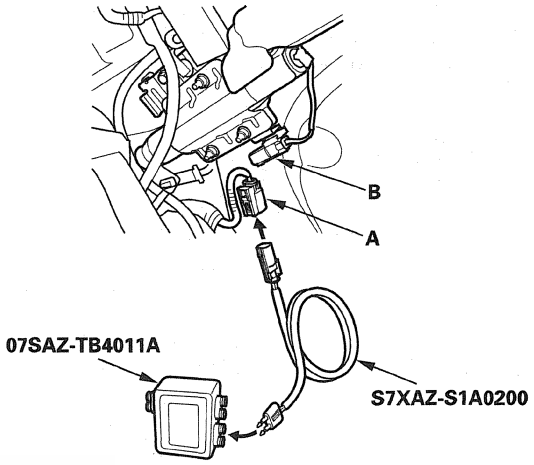

6. Connect the SRS inflator simulator (2 Ω connector) and simulator lead E to the left side wire harness.
7. Reconnect the negative cable to the battery.
8. Clear the DTC memory.
9. Read the DTC (see page 24-23).

   Is DTC 33-1x or 33-2x indicated?

   YES—Go to step 10.

   NO—Open or increased resistance in the left side curtain airbag inflator; replace the left side curtain airbag (see page 24-204), then clear the DTC. ■
10. Turn the ignition switch to LOCK (0).
11. Disconnect the negative cable from the battery, then wait at least 3 minutes.
12. Disconnect SRS unit connector C (28P) from the SRS unit (see step 10 on page 24-22).

(cont'd)

DTC Troubleshooting (cont'd)

13. Disconnect the SRS inflator simulator from the SRS simulator lead. Do not disconnect the simulator lead from the left side wire harness 2P connector.

14. Measure the resistance between the terminals of the SRS simulator lead. There should be less than 1.0 Ω.

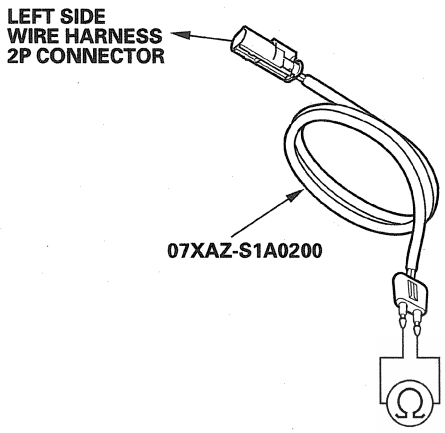

Is the resistance as specified?

YES—Faulty SRS unit or poor connection at the SRS unit connector C (28P) and the SRS unit. Check the connection; if the connection is OK, replace the SRS unit (see page 24-215).■

NO—Go to step 15.

15. Disconnect right side wire harness 16P connector C655 (A) from left side wire harness connector C655 (B).

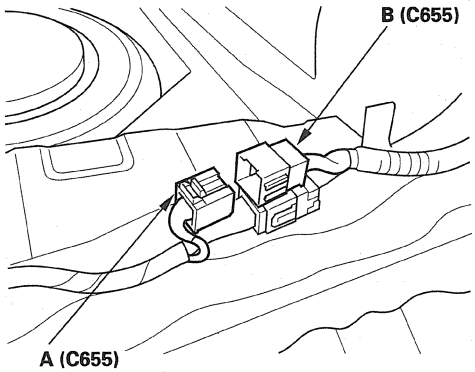

16. Measure the resistance between right side wire harness 16P connector C655 terminals No. 6 and No. 8. There should be less than 1.0 Ω.

RIGHT SIDE WIRE HARNESS 16P CONNECTOR C655

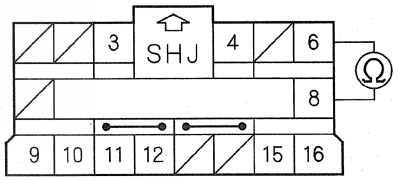

Wire side of female terminals

Is the resistance as specified?

YES—Open or increased resistance in left side wire harness; replace left side wire harness, then clear the DTC.■

NO—Open or increased resistance in the right side wire harness; replace the right side wire harness, then clear the DTC.■

DTC 33-3x ("x" can be 0 thru 9 or A thru F): Short to Another Wire or Decreased Resistance in the Left Side Curtain Airbag Inflator

Special Tools Required
- SRS inflator simulator 07SAZ-TB4011A
- SRS simulator lead E 07XAZ-S1A0200
- SRS short canceller 070AZ-SAA0100

NOTE: Before doing this troubleshooting procedure, review SRS Precautions and Procedures (see page 24-14), General Troubleshooting Information (see page 24-23), and Battery Terminal Disconnection and Reconnection (see page 22-91).

1. Clear the DTC memory (see page 24-24).
2. Turn the ignition switch to ON (II), and check that the SRS indicator comes on for about 6 seconds and then goes off.

   Does the SRS indicator stay on, and is DTC 33-3x indicated?

   YES—Go to step 3.

   NO—Intermittent failure, the system is OK at this time. Go to Troubleshooting Intermittent Failures (see page 24-25). If another DTC is indicated, troubleshoot the DTC. ■
3. Turn the ignition switch to LOCK (0).
4. Disconnect the negative cable from the battery, then wait at least 3 minutes.
5. Remove the C-pillar trim (see page 20-76), then disconnect the left side wire harness 2P connector (A) from the left side curtain airbag connector (B).

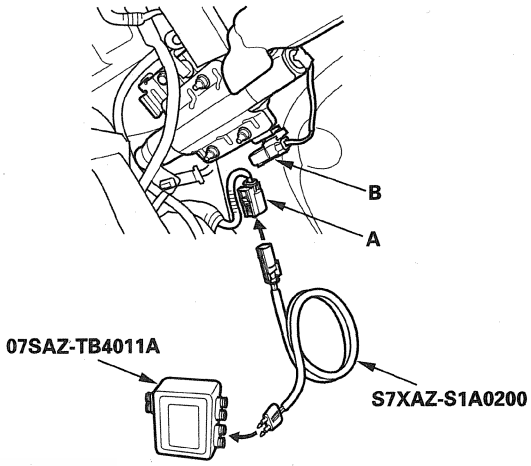

6. Connect the SRS inflator simulator (2 Ω connector) and simulator lead E to the left side wire harness.
7. Reconnect the negative cable to the battery.
8. Clear the DTC memory.
9. Read the DTC (see page 24-23).

   Is DTC 33-3x indicated?

   YES—Go to step 10.

   NO—Short to another wire in the left side curtain airbag inflator; replace the left side curtain airbag (see page 24-204), then clear the DTC. ■
10. Turn the ignition switch to LOCK (0).
11. Disconnect the negative cable from the battery, then wait at least 3 minutes.
12. Disconnect the SRS unit connector C (28P) from the SRS unit (see step 10 on page 24-22).
13. Disconnect the SRS inflator simulator from the SRS simulator lead. Do not disconnect the simulator lead from the left side wire harness 2P connector.
14. Connect the SRS short canceller (070AZ-SAA0100) to SRS unit connector C (28P) terminals No. 7 and No. 8 (see page 24-19).

(cont'd)

DTC Troubleshooting (cont'd)

15. Measure the resistance between the terminals of the SRS simulator lead. There should be an open circuit or at least 1 MΩ.

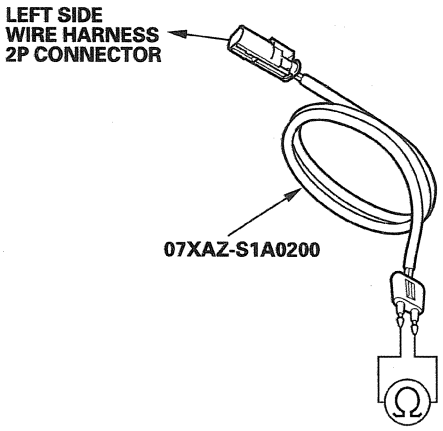

Is the resistance as specified?

YES—Faulty SRS unit or poor connection at SRS unit connector C (28P) and the SRS unit. Check the connection; if the connection is OK, replace the SRS unit (see page 24-215). ■

NO—Go to step 16.

16. Disconnect right side wire harness 16P connector C655 (A) from left side wire harness connector C655 (B).

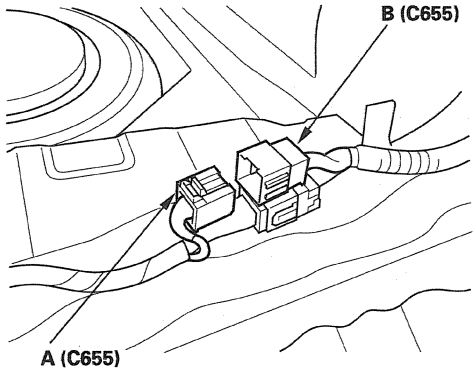

17. Measure the resistance between right side wire harness 16P connector C655 terminals No. 6 and No. 8. There should be an open circuit or at least 1 MΩ.

RIGHT SIDE WIRE HARNESS 16P CONNECTOR C655

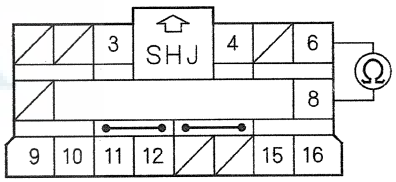

Wire side of female terminals

Is the resistance as specified?

YES—Short to another wire in the left side wire harness; replace the left side wire harness, then clear the DTC. ■

NO—Short to another wire in the right side wire harness; replace the right side wire harness, then clear the DTC. ■

DTC 33-8x ("x" can be 0 thru 9 or A thru F): Short to Power in the Left Side Curtain Airbag Inflator

Special Tools Required
- SRS inflator simulator 07SAZ-TB4011A
- SRS simulator lead E 07XAZ-S1A0200

NOTE: Before doing this troubleshooting procedure, review SRS Precautions and Procedures (see page 24-14), General Troubleshooting Information (see page 24-23), and Battery Terminal Disconnection and Reconnection (see page 22-91).

1. Clear the DTC memory (see page 24-24).
2. Turn the ignition switch to ON (II), and check that the SRS indicator comes on for about 6 seconds and then goes off.

   Does the SRS indicator stay on and is DTC 33-8x indicated?

   YES—Go to step 3.

   NO—Intermittent failure, the system is OK at this time. Go to Troubleshooting Intermittent Failures (see page 24-25). If another DTC is indicated, troubleshoot the DTC. ■
3. Turn the ignition switch to LOCK (0).
4. Disconnect the negative cable from the battery, then wait at least 3 minutes.
5. Remove the C-pillar trim (see page 20-76), then disconnect the left side wire harness 2P connector (A) from the left side curtain airbag connector (B).

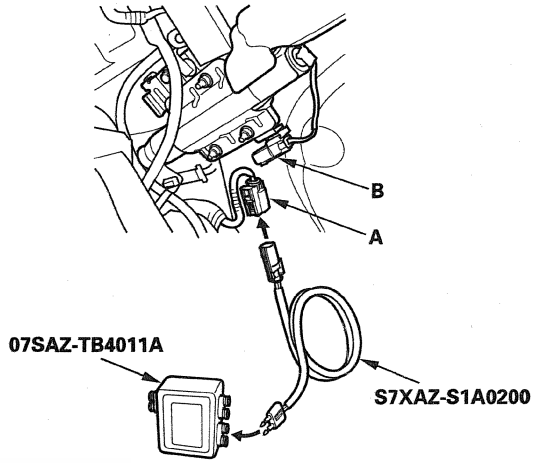

6. Connect the SRS inflator simulator (2 Ω connector) and simulator lead E to the left side wire harness.
7. Reconnect the negative cable to the battery.
8. Clear the DTC memory.
9. Read the DTC (see page 24-23).

   Is DTC 33-8x indicated?

   YES—Go to step 10.

   NO—Short to power in the left side curtain airbag inflator; replace the left side curtain airbag (see page 24-204), then clear the DTC. ■
10. Turn the ignition switch to LOCK (0).
11. Disconnect the negative cable from the battery, then wait at least 3 minutes.

(cont'd)

DTC Troubleshooting (cont'd)

12. Disconnect the SRS unit connector C (28P) from the SRS unit (see step 10 on page 24-22). Do not disconnect the simulator lead from the left side wire harness.

13. Reconnect the negative cable to the battery.

14. Turn the ignition switch to ON (II).

15. Disconnect the SRS inflator simulator from the SRS simulator lead.

16. Measure the voltage between each terminal of the SRS simulator lead and body ground. There should be less than 0.2 V.

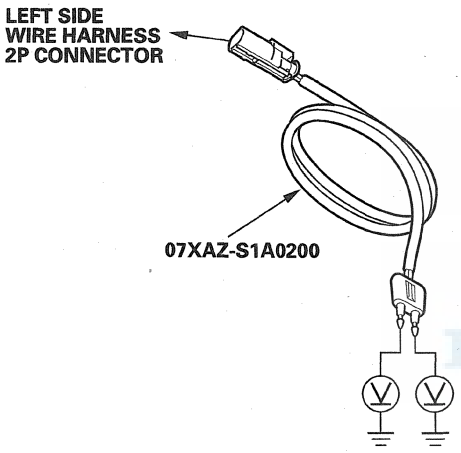

Is the voltage as specified?

YES—Faulty SRS unit or poor connection at SRS unit connector C (28P) and the SRS unit. Check the connection; if the connection is OK, replace the SRS unit (see page 24-215). ■

NO—Go to step 17.

17. Turn the ignition switch to LOCK (0).

18. Disconnect right side wire harness 16P connector C655 (A) from left side wire harness connector C655 (B).

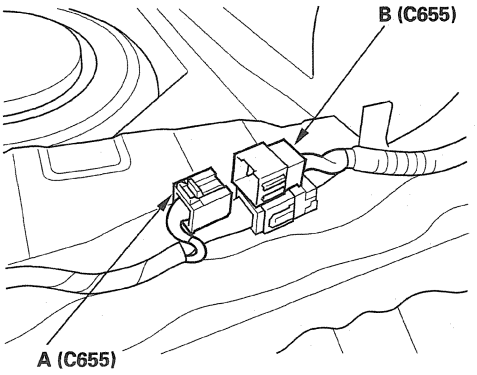

19. Measure the voltage between right side wire harness 16P connector C655 terminal No. 6 and body ground, and between the terminal No. 8 and body ground. There should be less than 0.2 V.

RIGHT SIDE WIRE HARNESS 16P CONNECTOR C655

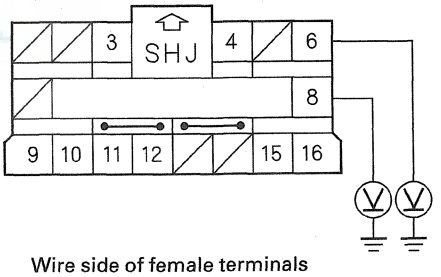

Wire side of female terminals

Is the voltage as specified?

YES—Short to power in the left side wire harness; replace the left side wire harness, then clear the DTC. ■

NO—Short to power in the right side wire harness; replace the right side wire harness, then clear the DTC. ■

DTC 33-9x ("x" can be 0 thru 9 or A thru F): Short to Ground in the Left Side Curtain Airbag Inflator

Special Tools Required
- SRS inflator simulator 07SAZ-TB4011A
- SRS simulator lead E 07XAZ-S1A0200

NOTE: Before doing this troubleshooting procedure, review SRS Precautions and Procedures (see page 24-14), General Troubleshooting Information (see page 24-23), and Battery Terminal Disconnection and Reconnection (see page 22-91).

1. Clear the DTC memory (see page 24-24).
2. Turn the ignition switch to ON (II), and check that the SRS indicator comes on for about 6 seconds and then goes off.

   Does the SRS indicator stay on, and is DTC 33-9x indicated?

   YES—Go to step 3.

   NO—Intermittent failure, the system is OK at this time. Go to Troubleshooting Intermittent Failures (see page 24-25). If another DTC is indicated, troubleshoot the DTC. ■
3. Turn the ignition switch to LOCK (0).
4. Disconnect the negative cable from the battery, then wait at least 3 minutes.
5. Remove the C-pillar trim (see page 20-76), then disconnect the left side wire harness 2P connector (A) from the left side curtain airbag connector (B).

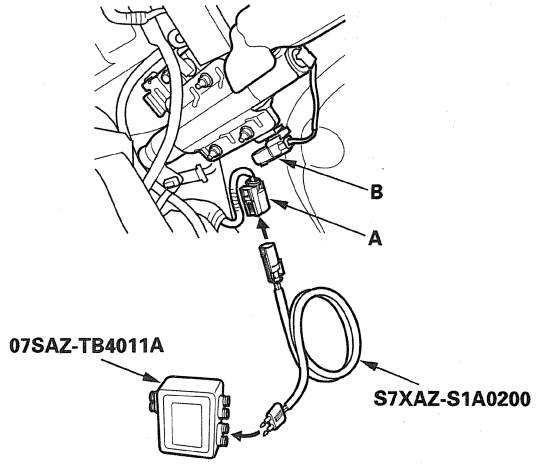

6. Connect the SRS inflator simulator (2 Ω connector) and simulator lead E to the left side wire harness.
7. Reconnect the negative cable to the battery.
8. Clear the DTC memory.
9. Read the DTC (see page 24-23).

   Is DTC 33-9x indicated?

   YES—Go to step 10.

   NO—Short to ground in the left side curtain airbag inflator; replace the left side curtain airbag (see page 24-204), then clear the DTC. ■
10. Turn the ignition switch to LOCK (0).
11. Disconnect the negative cable from the battery, then wait at least 3 minutes.

(cont'd)

DTC Troubleshooting (cont'd)

12. Disconnect the SRS unit connector C (28P) from the SRS unit (see step 10 on page 24-22).

13. Disconnect the SRS inflator simulator from the SRS simulator lead. Do not disconnect the simulator lead from the left side wire harness 2P connector.

14. Measure the resistance between each terminal of the SRS simulator lead and body ground. There should be an open circuit or at least 1 MΩ.

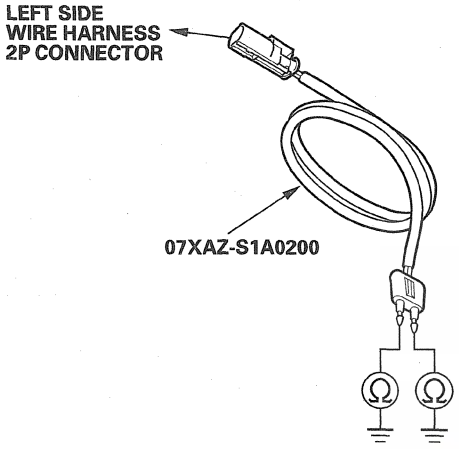

Is the resistance as specified?

YES—Faulty SRS unit or poor connection at SRS unit connector C (28P) and the SRS unit. Check the connection; if the connection is OK, replace the SRS unit (see page 24-215).■

NO—Go to step 15.

15. Disconnect right side wire harness 16P connector C655 (A) from left side wire harness connector C655 (B).

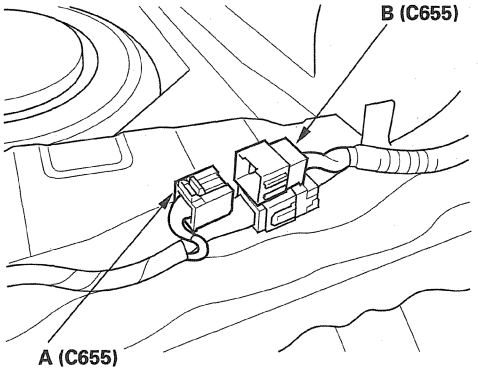

16. Measure the resistance between right side wire harness 16P connector C655 terminal No. 6 and body ground, and between terminal No. 8 and body ground. There should be an open circuit or at least 1 MΩ.

RIGHT SIDE WIRE HARNESS 16P CONNECTOR C655

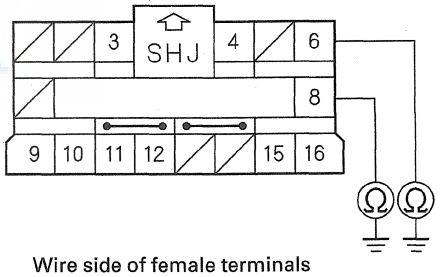

Wire side of female terminals

Is the resistance as specified?

YES—Short to ground in the left side wire harness; replace the left side wire harness, then clear the DTC.■

NO—Short to ground in the right side wire harness; replace the right side wire harness, then clear the DTC.■

DTC 34-1x ("x" can be 0 thru 9 or A thru F): Open in the Right Side Curtain Airbag Inflator

DTC 34-2x ("x" can be 0 thru 9 or A thru F): Increased Resistance in the Right Side Curtain Airbag Inflator

Special Tools Required
- SRS inflator simulator 07SAZ-TB4011A
- SRS simulator lead E 07XAZ-S1A0200

NOTE: Before doing this troubleshooting procedure, review SRS Precautions and Procedures (see page 24-14), General Troubleshooting Information (see page 24-23), and Battery Terminal Disconnection and Reconnection (see page 22-91).

1. Clear the DTC memory (see page 24-24).
2. Turn the ignition switch to ON (II), and check that the SRS indicator comes on for about 6 seconds and then goes off.

   Does the SRS indicator stay on, and is DTC 34-1x or 34-2x indicated?

   YES—Go to step 3.

   NO—Intermittent failure, the system is OK at this time. Go to Troubleshooting Intermittent Failures (see page 24-25). If another DTC is indicated, troubleshoot the DTC. ■
3. Turn the ignition switch to LOCK (0).
4. Disconnect the negative cable from the battery, then wait at least 3 minutes.
5. Remove the C-pillar trim (see page 20-76), then disconnect the right side wire harness 2P connector (A) from the right side curtain airbag connector (B).

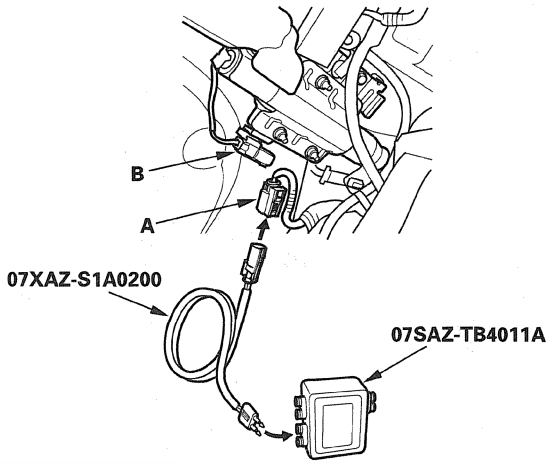

6. Connect the SRS inflator simulator (2 Ω connector) and simulator lead E to the right side wire harness.
7. Reconnect the negative cable to the battery.
8. Clear the DTC memory.
9. Read the DTC (see page 24-23).

   Is DTC 34-1x or 34-2x indicated?

   YES—Go to step 10.

   NO—Open or increased resistance in the right side curtain airbag inflator, replace the right side curtain airbag (see page 24-204), then clear the DTC. ■
10. Turn the ignition switch to LOCK (0).
11. Disconnect the negative cable from the battery, then wait at least 3 minutes.
12. Disconnect SRS unit connector C (28P) from the SRS unit (see step 10 on page 24-22).
13. Disconnect the SRS inflator simulator from the SRS simulator lead. Do not disconnect the simulator lead from the right side wire harness 2P connector.

(cont'd)

DTC Troubleshooting (cont'd)

14. Measure the resistance between the terminals of the SRS simulator lead. There should be less than 1.0 Ω.

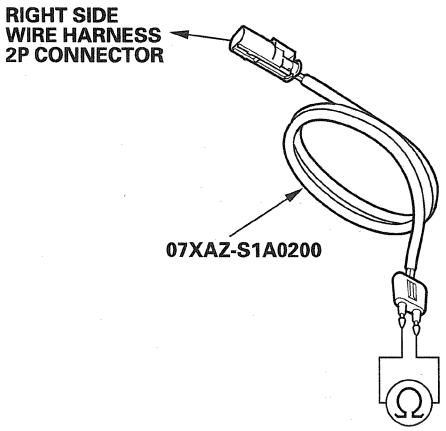

Is the resistance as specified?

YES—Faulty SRS unit or poor connection at SRS unit connector C (28P) and SRS unit. Check the connection; if the connection is OK, replace the SRS unit (see page 24-215). ■

NO—Go to step 15.

15. Disconnect right side wire harness 16P connector C655 (A) from left side wire harness connector C655 (B).

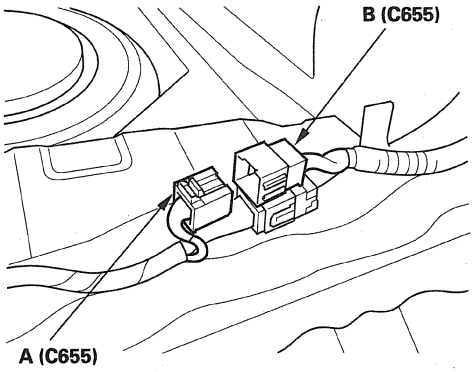

16. Measure the resistance between left side wire harness 16P connector C655 terminals No. 11 and No. 12. There should be less than 1.0 Ω.

LEFT SIDE WIRE HARNESS 16P CONNECTOR C655

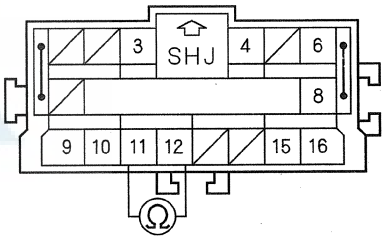

Terminal side of male terminals

Is the resistance as specified?

YES—Open or increased resistance in the right side wire harness; replace the right side wire harness, then clear the DTC. ■

NO—Go to step 17.

17. Disconnect right side wire harness 16P connector C604 (A) from left side wire harness connector C604 (B).

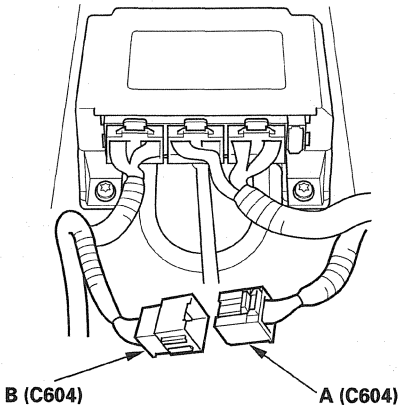

18. Measure the resistance between right side wire harness 16P connector C604 terminals No. 6 and No. 8. There should be 1.0 Ω or less.

RIGHT SIDE WIRE HARNESS 16P CONNECTOR C604

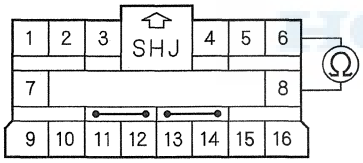

Wire side of female terminals

Is the resistance as specified?

YES—Open or increased resistance in the left side wire harness; replace the left side wire harness, then clear the DTC. ■

NO—Open or increased resistance in the right side wire harness; replace the right side wire harness, then clear the DTC. ■

DTC 34-3x ("x" can be 0 thru 9 or A thru F): Short to Another Wire or Decreased Resistance in the Right Side Curtain Airbag Inflator

Special Tools Required
- SRS inflator simulator 07SAZ-TB4011A
- SRS simulator lead E 07XAZ-S1A0200
- SRS short canceller 070AZ-SAA0100

NOTE: Before doing this troubleshooting procedure, review SRS Precautions and Procedures (see page 24-14), General Troubleshooting Information (see page 24-23), and Battery Terminal Disconnection and Reconnection (see page 22-91).

1. Clear the DTC memory (see page 24-24).

2. Turn the ignition switch to ON (II), and check that the SRS indicator comes on for about 6 seconds and then goes off.

   Does the SRS indicator stay on and is DTC 34-3x indicated?

   YES—Go to step 3.

   NO—Intermittent failure, the system is OK at this time. Go to Troubleshooting Intermittent Failures (see page 24-25). If another DTC is indicated, troubleshoot the DTC. ■

3. Turn the ignition switch to LOCK (0).

4. Disconnect the negative cable from the battery, then wait at least 3 minutes.

(cont'd)

DTC Troubleshooting (cont'd)

5. Remove the C-pillar trim (see page 20-76), then disconnect the right side wire harness 2P connector (A) from the right side curtain airbag connector (B).

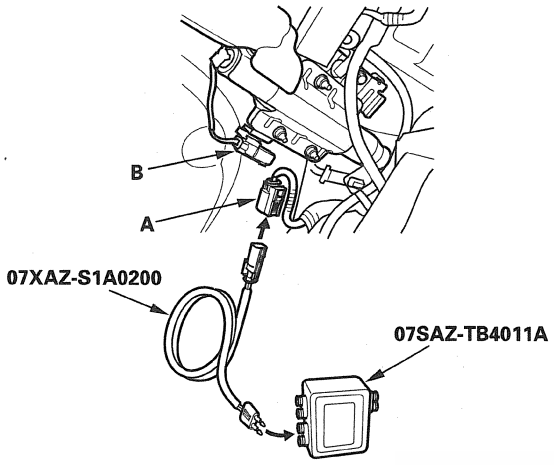

6. Connect the SRS inflator simulator (2 Ω connector) and simulator lead E to the right side wire harness.
7. Reconnect the negative cable to the battery.
8. Clear the DTC memory.
9. Read the DTC (see page 24-23).

   Is DTC 34-3x indicated?

   YES—Go to step 10.

   NO—Short to another wire in the right side curtain airbag inflator; replace the right side curtain airbag (see page 24-204), then clear the DTC. ■
10. Turn the ignition switch to LOCK (0).
11. Disconnect the negative cable from the battery, then wait at least 3 minutes.
12. Disconnect SRS unit connector C (28P) from the SRS unit (see step 10 on page 24-22).
13. Disconnect the SRS inflator simulator from the SRS simulator lead. Do not disconnect the simulator lead from the right side wire harness 2P connector.
14. Connect the SRS short canceller (070AZ-SAA0100) to SRS unit connector C (28P) terminals No. 9 and No. 10 (see page 24-19).
15. Measure the resistance between the terminals of the SRS simulator lead. There should be an open circuit or at least 1 MΩ.

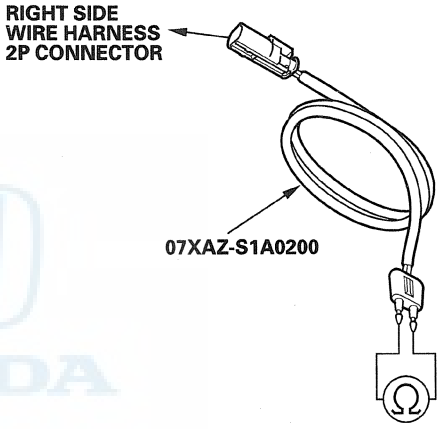

Is the resistance as specified?

YES—Faulty SRS unit or poor connection at SRS unit connector C (28P) and the SRS unit. Check the connection; if the connection is OK, replace the SRS unit (see page 24-215). ■

NO—Go to step 16.

16. Disconnect right side wire harness 16P connector (A) C655 from left side wire harness connector (B) C655.

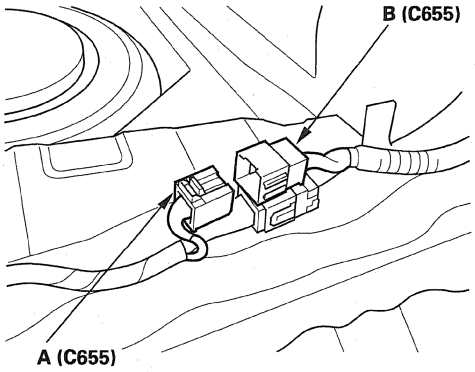

17. Measure the resistance between left side wire harness 16P connector C655 terminals No. 11 and No. 12. There should be an open circuit or at least 1 MΩ.

LEFT SIDE WIRE HARNESS 16P CONNECTOR C655

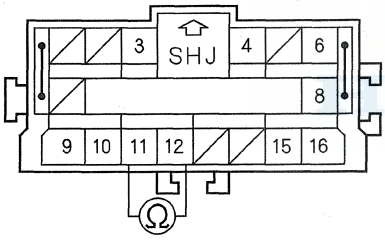

Terminal side of male terminals

Is the resistance as specified?

YES—Short to another wire in the right side wire harness; replace the right side wire harness, then clear the DTC. ■

NO—Go to step 18.

18. Disconnect right side wire harness 16P connector C604 (A) from left side wire harness connector C604 (B).

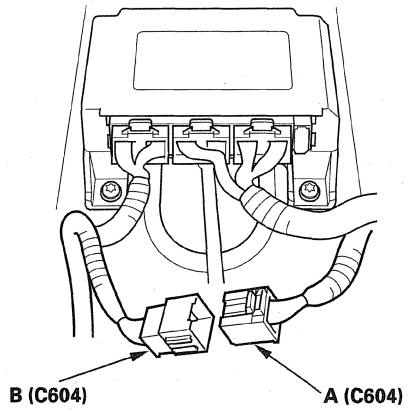

19. Measure the resistance between right side wire harness 16P connector C604 terminals No. 6 and No. 8. There should be an open circuit or at least 1 MΩ.

RIGHT SIDE WIRE HARNESS 16P CONNECTOR C604

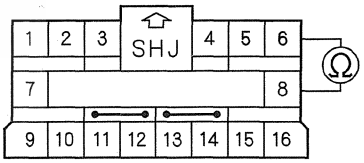

Wire side of female terminals

Is the resistance as specified?

YES—Short to another wire in the left side wire harness; replace the left side wire harness, then clear the DTC. ■

NO—Short to another wire in the right side wire harness; replace the right side wire harness, then clear the DTC. ■

DTC Troubleshooting (cont'd)

DTC 34-8x ("x" can be 0 thru 9 or A thru F): Short to Power in the Right Side Curtain Airbag Inflator

Special Tools Required
- SRS inflator simulator 07SAZ-TB4011A
- SRS simulator lead E 07XAZ-S1A0200

NOTE: Before doing this troubleshooting procedure, review SRS Precautions and Procedures (see page 24-14), General Troubleshooting Information (see page 24-23), and Battery Terminal Disconnection and Reconnection (see page 22-91).

1. Clear the DTC memory (see page 24-24).
2. Turn the ignition switch to ON (II), and check that the SRS indicator comes on for about 6 seconds and then goes off.

   Does the SRS indicator stay on, and is DTC 34-8x indicated?

   YES—Go to step 3.

   NO—Intermittent failure, the system is OK at this time. Go to Troubleshooting Intermittent Failures (see page 24-25). If another DTC is indicated, troubleshoot the DTC. ■
3. Turn the ignition switch to LOCK (0).
4. Disconnect the negative cable from the battery, then wait at least 3 minutes.
5. Remove the C-pillar trim (see page 20-76), then disconnect the right side wire harness 2P connector (A) from the right side curtain airbag connector (B).

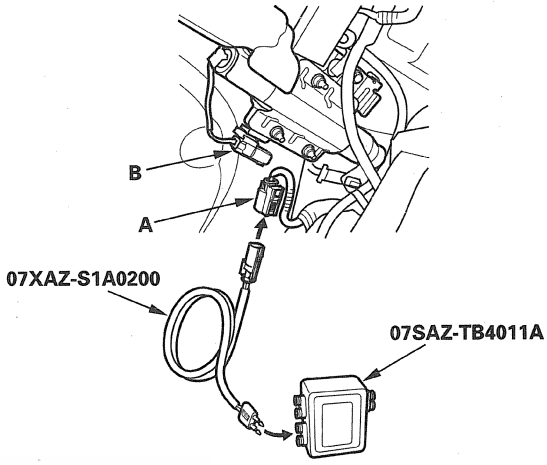

6. Connect the SRS inflator simulator (2 Ω connector) and simulator lead E to the right side wire harness.
7. Reconnect the negative cable to the battery.
8. Clear the DTC memory.
9. Read the DTC (see page 24-23).

   Is DTC 34-8x indicated?

   YES—Go to step 10.

   NO—Short to power in the right side curtain airbag inflator; replace the right side curtain airbag (see page 24-204), then clear the DTC. ■
10. Turn the ignition switch to LOCK (0).
11. Disconnect the negative cable from the battery, then wait at least 3 minutes.
12. Disconnect SRS unit connector C (28P) from the SRS unit (see step 10 on page 24-22).
13. Reconnect the negative cable to the battery.
14. Turn the ignition switch to ON (II).
15. Disconnect the SRS inflator simulator from SRS simulator lead. Do not disconnect the simulator lead from the right side wire harness 2P connector.

16. Measure the voltage between each terminal of the SRS simulator lead and body ground. There should be less than 0.2 V.

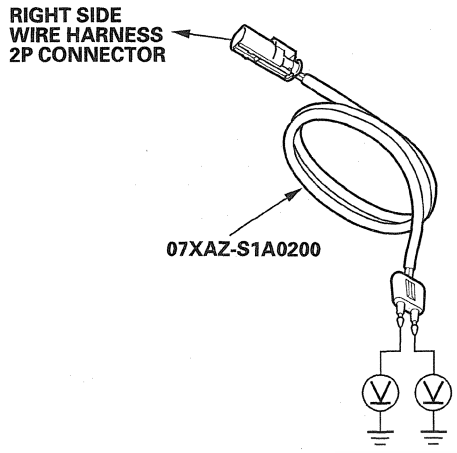

Is the voltage as specified?

YES—Faulty SRS unit or poor connection at SRS unit connector C (28P) and the SRS unit. Check the connection; if the connection is OK, replace the SRS unit (see page 24-215). ■

NO—Go to step 17.

17. Turn the ignition switch to LOCK (0).

18. Disconnect the negative cable from the battery, then wait at least 3 minutes.

19. Disconnect right side wire harness 16P connector C655 (A) from left side wire harness connector C655 (B).

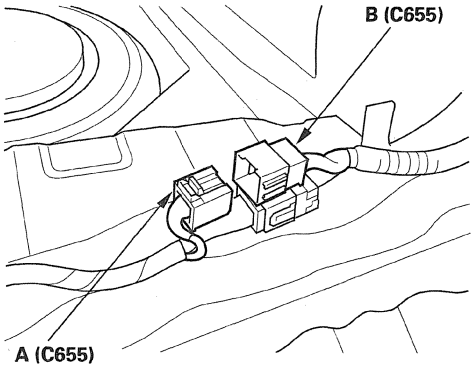

20. Turn the ignition switch to ON (II).

21. Measure the voltage between left side wire harness 16P connector C655 terminal No. 11 and body ground, and between terminal No. 12 and body ground. There should be less than 0.2 V.

LEFT SIDE WIRE HARNESS 16P CONNECTOR C655

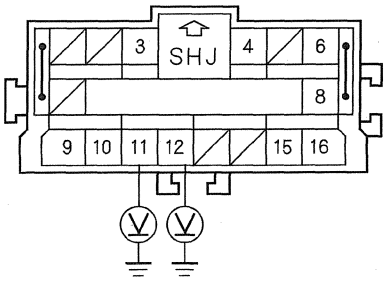

Terminal side of male terminals

Is the voltage as specified?

YES—Short to power in the right side wire harness; replace the right side wire harness, then clear the DTC. ■

NO—Go to step 22.

22. Turn the ignition switch to LOCK (0).

23. Disconnect the negative cable from the battery, then wait at least 3 minutes.

24. Disconnect right side wire harness 16P connector C604 (A) from left side wire harness connector C604 (B).

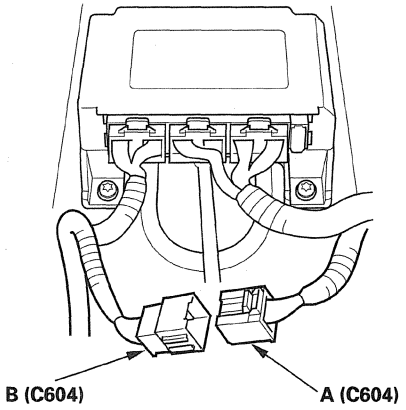

(cont'd)

DTC Troubleshooting (cont'd)

25. Turn the ignition switch to ON (II).

26. Measure the voltage between right side wire harness 16P connector C604 terminal No. 6 and body ground, and between terminal No. 8 and body ground. There should be less than 0.2 V.

RIGHT SIDE WIRE HARNESS 16P CONNECTOR C604

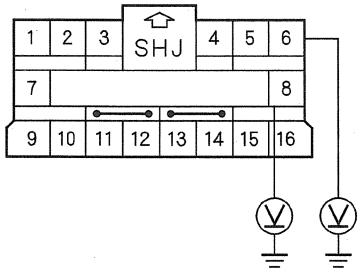

Wire side of female terminals

Is the voltage as specified?

YES—Short to power in the left side wire harness; replace the left side wire harness, then clear the DTC. ■

NO—Short to power in the right side wire harness; replace the right side wire harness, then clear the DTC. ■

DTC 34-9x ("x" can be 0 thru 9 or A thru F): Short to Ground in the Right Side Curtain Airbag Inflator

Special Tools Required
- SRS inflator simulator 07SAZ-TB4011A
- SRS simulator lead E 07XAZ-S1A0200

NOTE: Before doing this troubleshooting procedure, review SRS Precautions and Procedures (see page 24-14), General Troubleshooting Information (see page 24-23), and Battery Terminal Disconnection and Reconnection (see page 22-91).

1. Clear the DTC memory (see page 24-24).

2. Turn the ignition switch to ON (II), and check that the SRS indicator comes on for about 6 seconds and then goes off.

   Does the SRS indicator stay on, and is DTC 34-9x indicated?

   YES—Go to step 3.

   NO—Intermittent failure, the system is OK at this time. Go to Troubleshooting Intermittent Failures (see page 24-25). If another DTC is indicated, troubleshoot the DTC. ■

3. Turn the ignition switch to LOCK (0).

4. Disconnect the negative cable from the battery, then wait at least 3 minutes.

5. Remove the C-pillar trim (see page 20-76), then disconnect the right side wire harness 2P connector (A) from the right side curtain airbag connector (B).

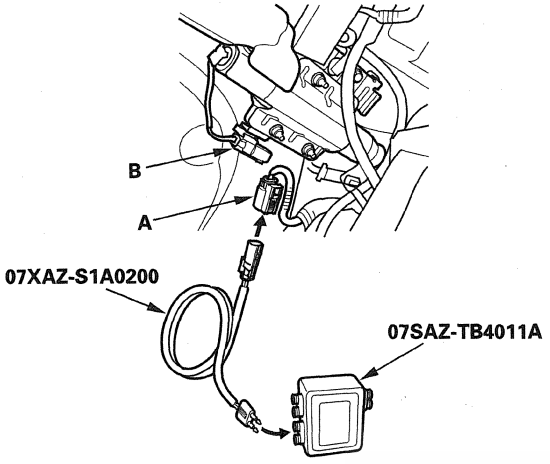

6. Connect the SRS inflator simulator (2 Ω connector) and simulator lead E to the right side wire harness.
7. Reconnect the negative cable to the battery.
8. Clear the DTC memory.
9. Read the DTC (see page 24-23).

   Is DTC 34-9x indicated?

   YES—Go to step 10.

   NO—Short to ground in the right side curtain airbag inflator; replace the right side curtain airbag (see page 24-204), then clear the DTC. ■
10. Turn the ignition switch to LOCK (0).
11. Disconnect the negative cable from the battery, then wait at least 3 minutes.
12. Disconnect SRS unit connector C (28P) from the SRS unit (see step 10 on page 24-22).
13. Disconnect the SRS inflator simulator from the SRS simulator lead. Do not disconnect the simulator lead from the right side wire harness 2P connector.
14. Measure the resistance between each terminal of the SRS simulator lead and body ground. There should be an open circuit or at least 1 MΩ.

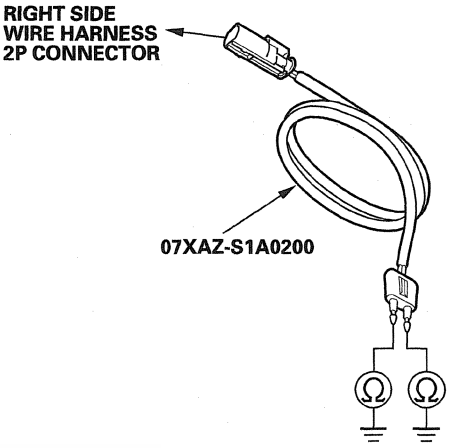

   Is the resistance as specified?

   YES—Faulty SRS unit or poor connection at SRS unit connector C (28P) and the SRS unit. Check the connection; if the connection is OK, replace the SRS unit (see page 24-215). ■

   NO—Go to step 15.
15. Disconnect right side wire harness 16P connector C655 (A) from left side wire harness connector C655 (B).

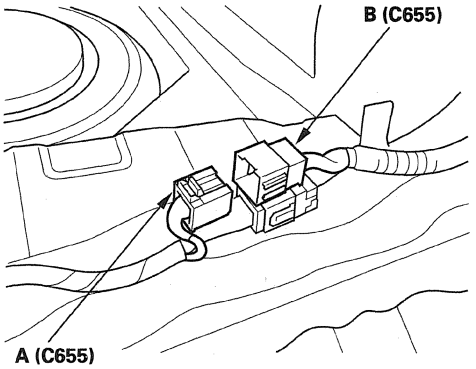

(cont'd)

DTC Troubleshooting (cont'd)

16. Measure the resistance between left side wire harness 16P connector C655 terminal No. 11 and body ground, and between terminal No. 12 and body ground. There should be an open circuit or at least 1 MΩ.

LEFT SIDE WIRE HARNESS 16P CONNECTOR C655

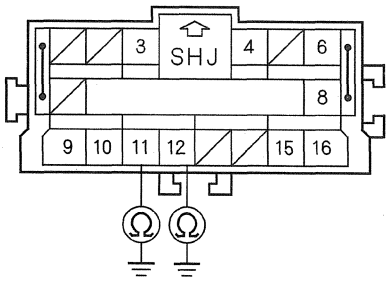

Terminal side of male terminals

Is the resistance as specified?

YES—Short to ground in the right side wire harness; replace the right side wire harness, then clear the DTC. ■

NO—Go to step 17.

17. Disconnect right side wire harness 16P connector C604 (A) from left side wire harness connector C604 (B).

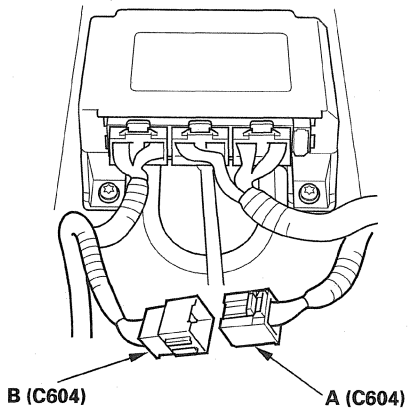

18. Measure the resistance between right side wire harness 16P connector C604 terminal No. 6 and body ground, and between terminal No. 8 and body ground. There should be an open circuit or at least 1 MΩ.

RIGHT SIDE WIRE HARNESS 16P CONNECTOR C604

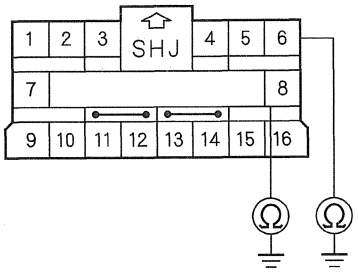

Wire side of female terminals

Is the resistance as specified?

YES—Short to ground in the left side wire harness; replace the left side wire harness, then clear the DTC. ■

NO—Short to ground in the right side wire harness; replace the right side wire harness, then clear the DTC. ■

DTC 41-1x ("x" can be 0 thru 9 or A thru F): No Signal from the Left Front Impact Sensor

Special Tools Required
- SRS inflator simulator 07SAZ-TB4011A
- SRS simulator lead H 07YAZ-S3AA100

NOTE: Before doing this troubleshooting procedure, review SRS Precautions and Procedures (see page 24-14), General Troubleshooting Information (see page 24-23), and Battery Terminal Disconnection and Reconnection (see page 22-91).

1. Clear the DTC memory (see page 24-24).

2. Turn the ignition switch to ON (II), and check that the SRS indicator comes on for about 6 seconds and then goes off.

   Does the SRS indicator stay on, and is DTC 41-1x indicated?

   YES—Go to step 3.

   NO—Intermittent failure, the system is OK at this time. Go to Troubleshooting Intermittent Failures (see page 24-25). If another DTC is indicated, troubleshoot the DTC. ■

3. Turn the ignition switch to LOCK (0).

4. Disconnect the negative cable from the battery, then wait at least 3 minutes.

5. Check the connections between SRS unit connector A (28P) and the SRS unit, between the engine compartment wire harness 2P connector and the left front impact sensor (see page 24-12), and at connector C303 (see page 22-28).

   Are the connections OK?

   YES—Go to step 6.

   NO—Repair the poor connections, then clear the DTC, and retest.

6. Disconnect SRS unit connector A (28P) from the SRS unit (see step 10 on page 24-22).

7. Disconnect the engine compartment wire harness 2P connector (A) from the left front impact sensor.

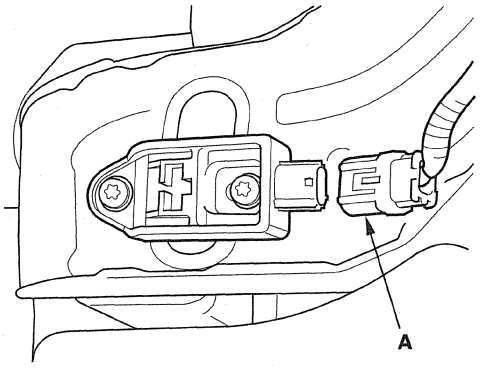

8. Measure the resistance between SRS unit connector A (28P) terminals No. 15 and No. 27. There should be an open circuit or at least 1 MΩ.

SRS UNIT CONNECTOR A (28P)

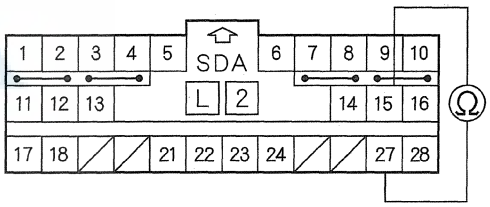

Wire side of female terminals

Is the resistance as specified?

YES—Go to step 9.

NO—Short to another wire in the dashboard wire harness or engine compartment wire harness; replace the faulty harness, then clear the DTC. ■

(cont'd)

DTC Troubleshooting (cont'd)

9. Measure the resistance between SRS unit connector A (28P) terminal No. 15 and body ground, and between the terminal No. 27 and body ground. There should be an open circuit or at least 1 MΩ.

SRS UNIT CONNECTOR A (28P)

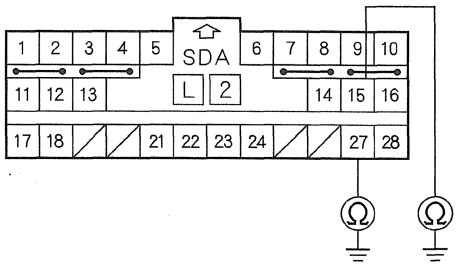

Wire side of female terminals

Is the resistance as specified?

YES—Go to step 10.

NO—Short to ground in the dashboard wire harness or the engine compartment wire harness; replace the faulty harness, then clear the DTC. ■

10. Reconnect the negative cable to the battery.

11. Turn the ignition switch to ON (II).

12. Measure the for voltage between SRS unit connector A (28P) terminal No. 15 and body ground, and between the terminal No. 27 and body ground. There should be less than 0.2 V.

SRS UNIT CONNECTOR A (28P)

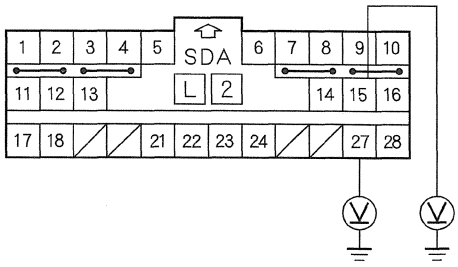

Wire side of female terminals

Is the voltage as specified?

YES—Go to step 13.

NO—Short to power in the dashboard wire harness or the engine compartment wire harness; replace the faulty harness, then clear the DTC. ■

13. Turn the ignition switch to LOCK (0).

14. Connect the SRS inflator simulator (jumper connector) and simulator lead H to the engine compartment wire harness 2P connector (A).

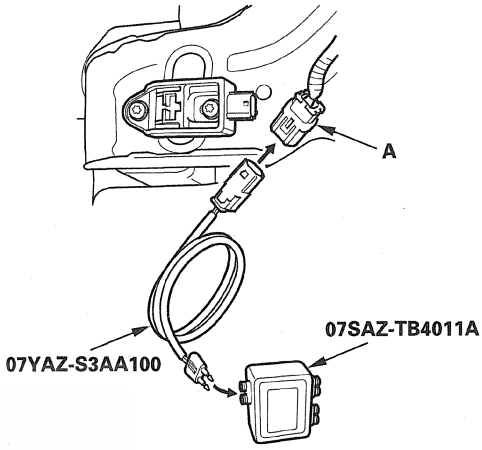

15. Measure the resistance between SRS unit connector A (28P) terminals No. 15 and No. 27. There should be less than 1.0 Ω.

SRS UNIT CONNECTOR A (28P)

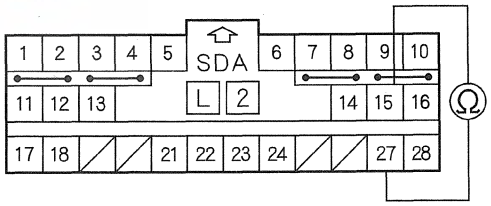

Wire side of female terminals

Is the resistance as specified?

YES—Faulty left front impact sensor or SRS unit; replace the left front impact sensor (see page 24-222), then clear the DTC. If the problem is still present, replace the SRS unit (see page 24-215). ■

NO—Open in dashboard wire harness or engine compartment wire harness; replace the faulty harness, then clear the DTC. ■

DTC 41-Cx ("x" can be 0 thru 9 or A thru F): Faulty Power Supply to the Left Front Impact Sensor

NOTE: Before doing this troubleshooting procedure, review SRS Precautions and Procedures (see page 24-14), General Troubleshooting Information (see page 24-23), and Battery Terminal Disconnection and Reconnection (see page 22-91).

1. Clear the DTC memory (see page 24-24).

2. Turn the ignition switch to ON (II), and check that the SRS indicator comes on for about 6 seconds and then goes off.

   Does the SRS indicator stay on, and is DTC 41-Cx indicated?

   YES—Go to step 3.

   NO—Intermittent failure, the system is OK at this time. Go to Troubleshooting Intermittent Failures (see page 24-25). If another DTC is indicated, troubleshoot the DTC.■

3. Turn the ignition switch to LOCK (0).

4. Disconnect the negative cable from the battery, then wait at least 3 minutes.

5. Disconnect SRS unit connector A (28P) from the SRS unit (see step 10 on page 24-22).

6. Disconnect the engine compartment wire harness 2P connector (A) from the left front impact sensor.

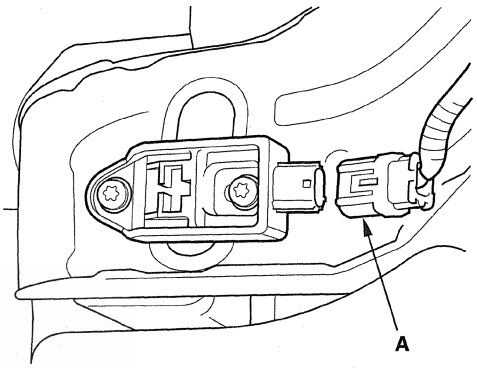

(cont'd)

DTC Troubleshooting (cont'd)

7. Measure the resistance between SRS unit connector A (28P) terminal No. 27 and body ground. There should be an open circuit or at least 1 MΩ.

SRS UNIT CONNECTOR A (28P)

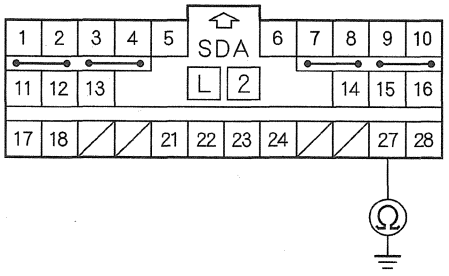

Wire side of female terminals

Is the resistance as specified?

YES—Go to step 8.

NO—Short to ground in the dashboard wire harness or the engine compartment wire harness; replace the faulty harness, then clear the DTC. ■

8. Measure the resistance between SRS unit connector A (28P) terminals No. 15 and No. 27. There should be an open circuit or at least 1 MΩ.

SRS UNIT CONNECTOR A (28P)

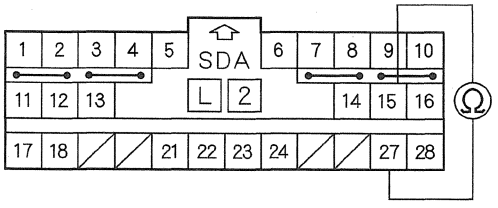

Wire side of female terminals

Is the resistance as specified?

YES—Faulty left front impact sensor or SRS unit; replace the left front impact sensor (see page 24-222), then clear the DTC. If the problem is still present, replace the SRS unit (see page 24-215). ■

NO—Short to another wire in the dashboard wire harness or the engine compartment wire harness; replace the faulty harness, then clear the DTC. ■

DTC 42-1x ("x" can be 0 thru 9 or A thru F): No Signal from the Right Front Impact Sensor

Special Tools Required
- SRS inflator simulator 07SAZ-TB4011A
- SRS simulator lead H 07YAZ-S3AA100

NOTE: Before doing this troubleshooting procedure, review SRS Precautions and Procedures (see page 24-14), General Troubleshooting Information (see page 24-23), and Battery Terminal Disconnection and Reconnection (see page 22-91).

1. Clear the DTC memory (see page 24-24).

2. Turn the ignition switch to ON (II), and check that the SRS indicator comes on for about 6 seconds and then goes off.

   Does the SRS indicator stay on, and is DTC 42-1x indicated?

   YES—Go to step 3.

   NO—Intermittent failure, the system is OK at this time. Go to Troubleshooting Intermittent Failures (see page 24-25). If another DTC is indicated, troubleshoot the DTC. ■

3. Turn the ignition switch to LOCK (0).

4. Disconnect the negative cable from the battery, then wait at least 3 minutes.

5. Check the connections between SRS unit connector A (28P) and the SRS unit, between the engine compartment wire harness 2P connector and the right front impact sensor (see page 24-12), and at connector C303 (see page 22-28).

   Are the connections OK?

   YES—Go to step 6.

   NO—Repair the poor connections, then clear the DTC, and retest.

6. Disconnect SRS unit connector A (28P) from the SRS unit (see step 10 on page 24-22).

7. Disconnect the engine compartment wire harness 2P connector (A) from the right front impact sensor.

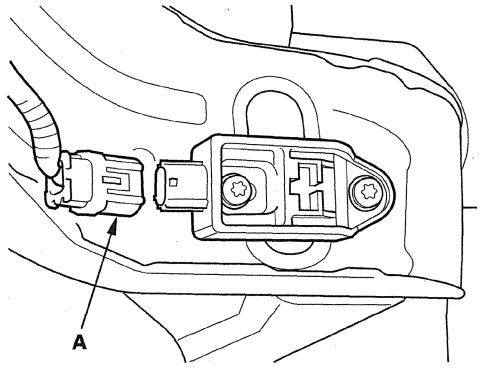

8. Measure the resistance between SRS unit connector A (28P) terminals No. 16 and No. 28. There should be an open circuit or at least 1 MΩ.

SRS UNIT CONNECTOR A (28P)

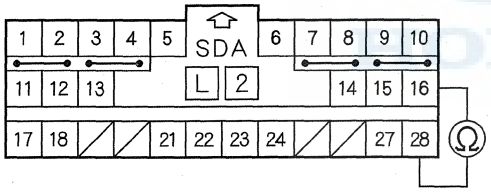

Wire side of female terminals

Is the resistance as specified?

YES—Go to step 9.

NO—Short to another wire in the engine compartment wire harness or dashboard wire harness; replace the faulty harness, then clear the DTC. ■

9. Measure the resistance between SRS unit connector A (28P) terminal No. 16 and body ground, and between terminal No. 28 and body ground. There should be an open circuit or at least 1 MΩ.

SRS UNIT CONNECTOR A (28P)

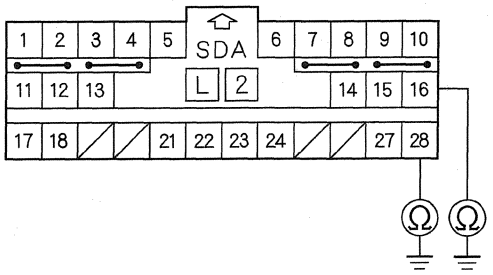

Wire side of female terminals

Is the resistance as specified?

YES—Go to step 10.

NO—Short to ground in the dashboard wire harness or the engine compartment wire harness; replace the faulty harness, then clear the DTC. ■

10. Reconnect the negative cable to the battery.

11. Turn the ignition switch to ON (II).

(cont'd)

DTC Troubleshooting (cont'd)

12. Measure the voltage between SRS unit connector A (28P) terminal No. 16 and body ground, and between terminal No. 28 and body ground. There should be less than 0.2 V.

SRS UNIT CONNECTOR A (28P)

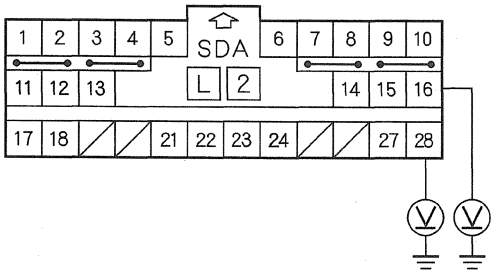

Wire side of female terminals

Is the voltage as specified?

YES—Go to step 13.

NO—Short to power in the engine compartment wire harness or dashboard wire harness; replace the faulty harness, then clear the DTC. ■

13. Turn the ignition switch to LOCK (0).

14. Connect the SRS inflator simulator (jumper connector) and simulator lead H to the engine compartment wire harness 2P connector (A).

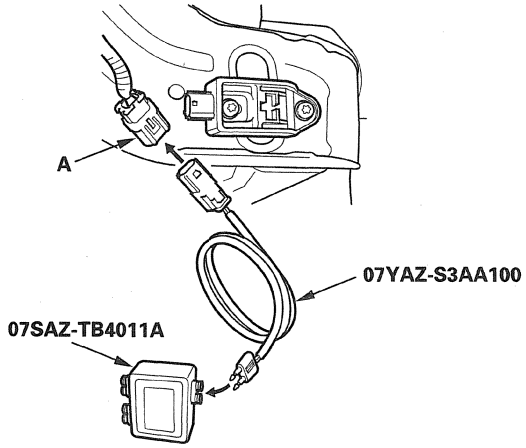

15. Measure the resistance between SRS unit connector A (28P) terminals No. 16 and No. 28. There should be less than 1.0 Ω.

SRS UNIT CONNECTOR A (28P)

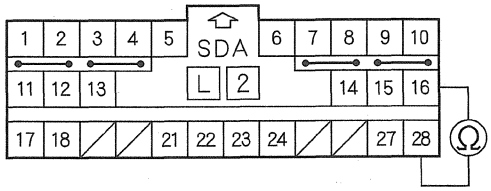

Wire side of female terminals

Is the resistance as specified?

YES—Faulty right front impact sensor or SRS unit; replace the right front impact sensor (see page 24-222), then clear the DTC. If the problem is still present, replace the SRS unit (see page 24-215). ■

NO—Open in the engine compartment wire harness or the dashboard wire harness; replace the faulty harness, then clear the DTC. ■

DTC 42-Cx ("x" can be 0 thru 9 or A thru F): Faulty Power Supply to the Right Front Impact Sensor

NOTE: Before doing this troubleshooting procedure, review SRS Precautions and Procedures (see page 24-14), General Troubleshooting Information (see page 24-23), and Battery Terminal Disconnection and Reconnection (see page 22-91).

1. Clear the DTC memory (see page 24-24).
2. Turn the ignition switch to ON (II), and check that the SRS indicator comes on for about 6 seconds and then goes off.

   Does the SRS indicator stay on, and is DTC 42-Cx indicated?

   YES—Go to step 3.

   NO—Intermittent failure, system is OK at this time. Go to Troubleshooting Intermittent Failures (see page 24-25). If another DTC is indicated, troubleshoot the DTC. ■
3. Turn the ignition switch to LOCK (0).
4. Disconnect the negative cable from the battery, then wait at least 3 minutes.
5. Disconnect SRS unit connector A (28P) from the SRS unit (see step 10 on page 24-22).
6. Disconnect the engine compartment wire harness 2P connector (A) from the right front impact sensor.

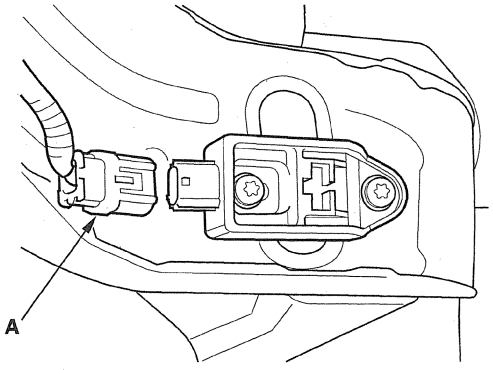

7. Measure the resistance between SRS unit connector A (28P) terminal No. 28 and body ground. There should be an open circuit or at least 1 MΩ.

SRS UNIT CONNECTOR A (28P)

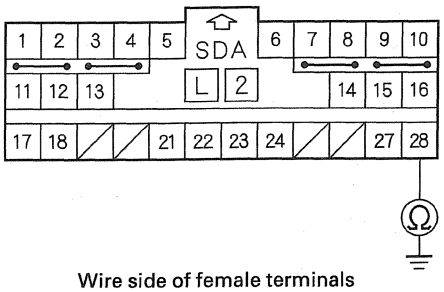

Wire side of female terminals

Is the resistance as specified?

YES—Go to step 8.

NO—Short to ground in the dashboard wire harness or the engine compartment wire harness; replace the faulty harness, then clear the DTC. ■

8. Measure the resistance between SRS unit connector A (28P) terminals No. 16 and No. 28. There should be an open circuit or at least 1 MΩ.

SRS UNIT CONNECTOR A (28P)

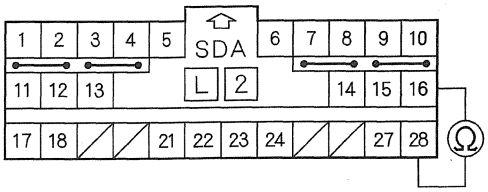

Wire side of female terminals

Is the resistance as specified?

YES—Faulty right front impact sensor or SRS unit; replace the right front impact sensor (see page 24-222), then clear the DTC. If the problem is still present, replace the SRS unit (see page 24-215). ■

NO—Short to another wire in the dashboard wire harness or the engine compartment wire harness; replace the faulty harness, then clear the DTC. ■

DTC Troubleshooting (cont'd)

DTC 41-2x, 41-8x, 41-9x, 41-Bx ("x" can be 0 thru 9 or A thru F): Internal Failure of the Left Front Impact Sensor

NOTE: Before doing this troubleshooting procedure, review SRS Precautions and Procedures (see page 24-14) and General Troubleshooting Information (see page 24-23).

1. Clear the DTC memory (see page 24-24).
2. Turn the ignition switch to ON (II), and check that the SRS indicator comes on for about 6 seconds and then goes off.
3. Read the DTC (see page 24-23).

   Is DTC 41-2x, 41-8x, 41-9x, or 41-Bx indicated?

   YES—Faulty left front impact sensor; replace the left front impact sensor (see page 24-222), then clear the DTC. If the DTC is still present, replace the SRS unit (see page 24-215).■

   NO—Intermittent failure, the system is OK at this time. Go to Troubleshooting Intermittent Failures (see page 24-25). If another DTC is indicated, troubleshoot the DTC.■

DTC 42-2x, 42-8x, 42-9x, 42-Bx ("x" can be 0 thru 9 or A thru F): Internal Failure of the Right Front Impact Sensor

NOTE: Before doing this troubleshooting procedure, review SRS Precautions and Procedures (see page 24-14) and General Troubleshooting Information (see page 24-23).

1. Clear the DTC memory (see page 24-24).
2. Turn the ignition switch to ON (II), and check that the SRS indicator comes on for about 6 seconds and then goes off.
3. Read the DTC (see page 24-23).

   Is DTC 42-2x, 42-8x, 42-9x, or 42-Bx indicated?

   YES—Faulty right front impact sensor; replace the right front impact sensor (see page 24-222), then clear the DTC. If the DTC is still present, replace the SRS unit (see page 24-215).■

   NO—Intermittent failure, the system is OK at this time. Go to Troubleshooting Intermittent Failures (see page 24-25). If another DTC is indicated, troubleshoot the DTC.■

DTC 43-1x ("x" can be 0 thru 9 or A thru F): No Signal from the Left Side Impact Sensor (first)

Special Tools Required
- SRS inflator simulator 07SAZ-TB4011A
- SRS simulator lead H 07YAZ-S3AA100

NOTE: Before doing this troubleshooting procedure, review SRS Precautions and Procedures (see page 24-14), General Troubleshooting Information (see page 24-23), and Battery Terminal Disconnection and Reconnection (see page 22-91).

1. Clear the DTC memory (see page 24-24).

2. Turn the ignition switch to ON (II), and check that the SRS indicator comes on for about 6 seconds and then goes off.

   Does the SRS indicator stay on, and is DTC 43-1x indicated?

   YES—Go to step 3.

   NO—Intermittent failure, the system is OK at this time. Go to Troubleshooting Intermittent Failures (see page 24-25). If another DTC is indicated, troubleshoot the DTC. ■

3. Turn the ignition switch to LOCK (0).

4. Disconnect the negative cable from the battery, then wait at least 3 minutes.

5. Check the connections between SRS unit connector C (28P) and the SRS unit, between the left side wire harness 2P connector and the left side impact sensor (first), at left wire harness 16P connector C604 and right wire harness connector C604 (see page 22-40).

   Are the connections OK?

   YES—Go to step 6.

   NO—Repair the poor connections, then clear the DTC, and retest.

6. Disconnect SRS unit connector C (28P) from the SRS unit (see step 10 on page 24-22).

7. Disconnect the left side wire harness 2P connector (A) from the left side impact sensor (first).

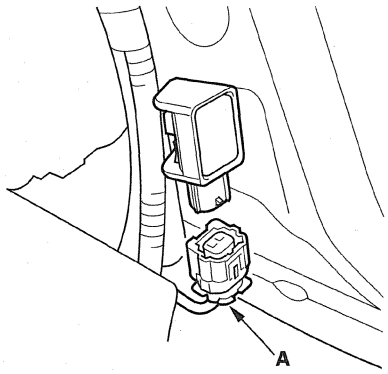

8. Measure the resistance between SRS unit connector C (28P) terminals No. 11 and No. 12. There should be an open circuit or at least 1 MΩ.

SRS UNIT CONNECTOR C (28P)

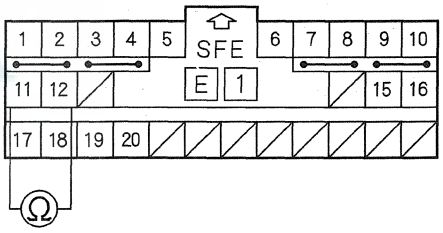

Wire side of female terminals

Is the resistance as specified?

YES—Go to step 9.

NO—Short to another wire in the left side wire harness or the right side wire harness; replace the faulty harness, then clear the DTC. ■

(cont'd)

DTC Troubleshooting (cont'd)

9. Measure the resistance between SRS unit connector C (28P) terminal No. 11 and body ground, and between terminal No. 12 and body ground. There should be an open circuit or at least 1 MΩ.

SRS UNIT CONNECTOR C (28P)

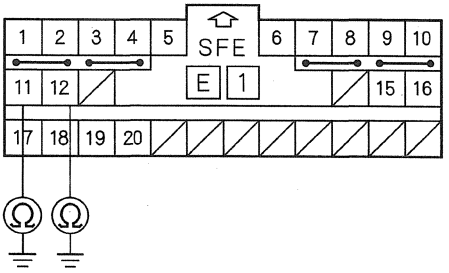

Wire side of female terminals

Is the resistance as specified?

YES—Go to step 10.

NO—Short to ground in the left side wire harness or right side wire harness; replace the faulty harness, then clear the DTC. ■

10. Reconnect the negative cable to the battery.

11. Turn the ignition switch to ON (II).

12. Measure the voltage between SRS unit connector C (28P) terminal No. 11 and body ground, and between terminal No. 12 and body ground. There should be less than 0.2 V.

SRS UNIT CONNECTOR C (28P)

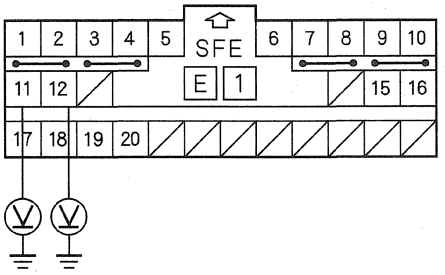

Wire side of female terminals

Is the voltage as specified?

YES—Go to step 13.

NO—Short to power in the left side wire harness or the right side wire harness; replace the faulty harness, then clear the DTC. ■

13. Turn the ignition switch to LOCK (0).

14. Connect the SRS inflator simulator (jumper connector) and simulator lead H to the left side wire harness 2P connector (A).

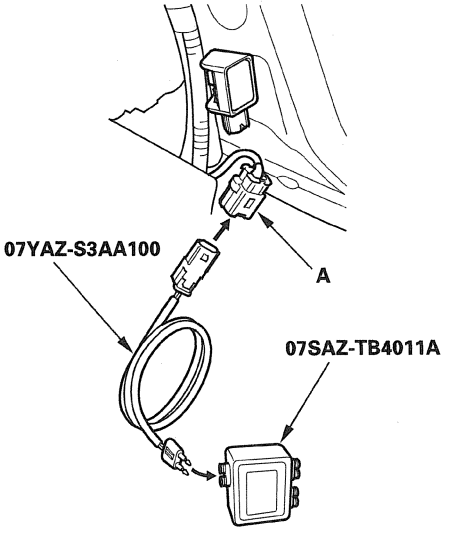

15. Measure the resistance between SRS unit connector C (28P) terminals No. 11 and No. 12. There should be less than 1.0 Ω.

SRS UNIT CONNECTOR C (28P)

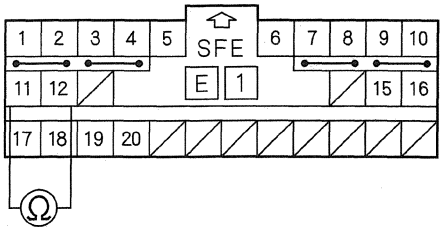

Wire side of female terminals

Is the resistance as specified?

YES—Faulty left side impact sensor (first) or SRS unit; replace the left side impact sensor (first) (see page 24-216), then clear the DTC. If the problem is still present, replace the SRS unit (see page 24-215). ■

NO—Open in the left side wire harness or the right side wire harness; replace the faulty harness, then clear the DTC. ■

DTC 43-Cx ("x" can be 0 thru 9 or A thru F): Faulty Power Supply to the Left Side Impact Sensor (first)

NOTE: Before doing this troubleshooting procedure, review SRS Precautions and Procedures (see page 24-14), General Troubleshooting Information (see page 24-23), and Battery Terminal Disconnection and Reconnection (see page 22-91).

1. Clear the DTC memory (see page 24-24).
2. Turn the ignition switch to ON (II), and check that the SRS indicator comes on for about 6 seconds and then goes off.

   Does the SRS indicator stay on, and is DTC 43-Cx indicated?

   YES—Go to step 3.

   NO—Intermittent failure, the system is OK at this time. Go to Troubleshooting Intermittent Failures (see page 24-25). If another DTC is indicated, troubleshoot the DTC. ■
3. Turn the ignition switch to LOCK (0).
4. Disconnect the negative cable from the battery, then wait at least 3 minutes.

(cont'd)

DTC Troubleshooting (cont'd)

5. Disconnect SRS unit connector C (28P) from the SRS unit (see step 10 on page 24-22).

6. Disconnect the left side wire harness 2P connector (A) from the driver's side impact sensor (first).

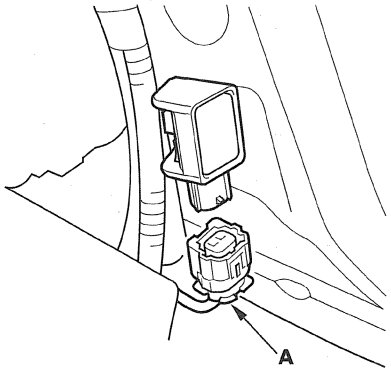

7. Measure the resistance between SRS unit connector C (28P) terminal No. 11 and body ground. There should be an open circuit or at least 1 MΩ.

SRS UNIT CONNECTOR C (28P)

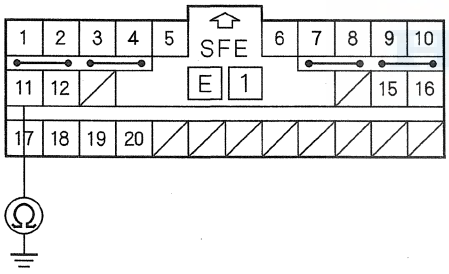

Wire side of female terminals

Is the resistance as specified?

YES—Go to step 8.

NO—Short to ground in the left side wire harness or the right side wire harness, replace the faulty harness, then clear the DTC. ■

8. Measure the resistance between SRS unit connector C (28P) terminals No. 11 and No. 12. There should be an open circuit or at least 1 MΩ.

SRS UNIT CONNECTOR C (28P)

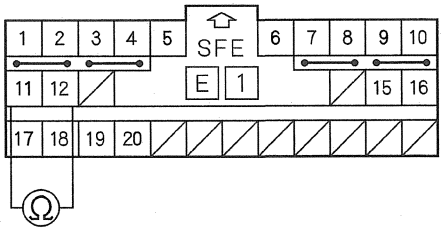

Wire side of female terminals

Is the resistance as specified?

YES—Faulty driver's side impact sensor (first) or SRS unit; replace the sensor (first) (see page 24-216), then clear the DTC. If the problem is still present, replace the SRS unit (see page 24-215). ■

NO—Short to another wire in the left side wire harness or the right side wire harness; replace the faulty harness, then clear the DTC. ■

DTC 44-1x ("x" can be 0 thru 9 or A thru F): No Signal from the Right Side Impact Sensor (first)

Special Tools Required
- SRS inflator simulator 07SAZ-TB4011A
- SRS simulator lead H 07YAZ-S3AA100

NOTE: Before doing this troubleshooting procedure, review SRS Precautions and Procedures (see page 24-14), General Troubleshooting Information (see page 24-23), and Battery Terminal Disconnection and Reconnection (see page 22-91).

1. Clear the DTC memory (see page 24-24).

2. Turn the ignition switch to ON (II), and check that the SRS indicator comes on for about 6 seconds and then goes off.

   Does the SRS indicator stay on, and is DTC 44-1x indicated?

   YES—Go to step 3.

   NO—Intermittent failure, the system is OK at this time. Go to Troubleshooting Intermittent Failures (see page 24-25). If another DTC is indicated, troubleshoot the DTC. ■

3. Turn the ignition switch to LOCK (0).

4. Disconnect the negative cable from the battery, then wait at least 3 minutes.

5. Check the connections between the SRS unit connector C (28P) and the SRS unit (see page 24-215), between the right side wire harness 2P connector and the right side impact sensor (first) (see page 24-216).

   Are the connections OK?

   YES—Go to step 6.

   NO—Repair the poor connections, then clear the DTC, and retest.

6. Disconnect SRS unit connector C (28P) from the SRS unit (see step 10 on page 24-22).

7. Disconnect the right side wire harness 2P connector (A) from the right side impact sensor (first).

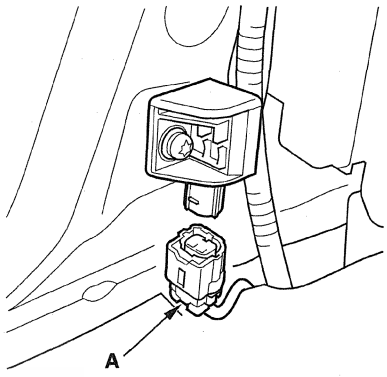

8. Measure the resistance between SRS unit connector C (28P) terminals No. 15 and No. 16. There should be an open circuit or at least 1 MΩ.

SRS UNIT CONNECTOR C (28P)

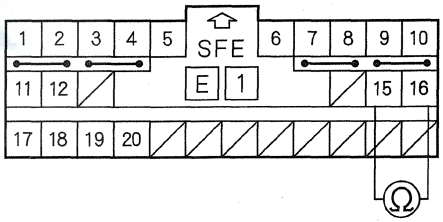

Wire side of female terminals

Is the resistance as specified?

YES—Go to step 9.

NO—Short to another wire in the right side wire harness; replace the right side wire harness, then clear the DTC. ■

(cont'd)

DTC Troubleshooting (cont'd)

9. Measure the resistance between SRS unit connector C (28P) terminal No. 15 and body ground, and between terminal No. 16 and body ground. There should be an open circuit or at least 1 MΩ.

SRS UNIT CONNECTOR C (28P)

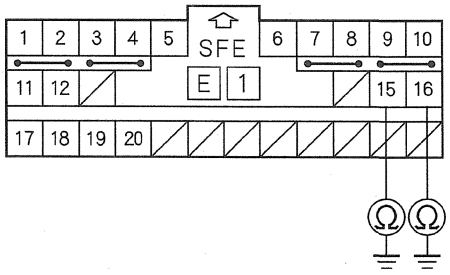

Wire side of female terminals

Is the resistance as specified?

YES—Go to step 10.

NO—Short to ground in the right side wire harness; replace the right side wire harness, then clear the DTC. ■

10. Reconnect the negative cable to the battery.

11. Turn the ignition switch to ON (II).

12. Measure the voltage between SRS unit connector C (28P) terminal No. 15 and body ground, and between terminal No. 16 and body ground. There should be less than 0.2 V.

SRS UNIT CONNECTOR C (28P)

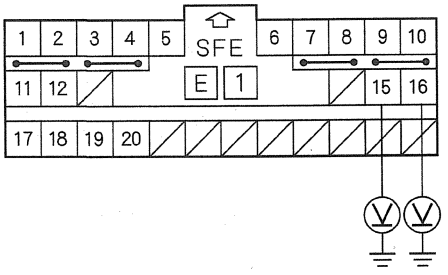

Wire side of female terminals

Is the voltage as specified?

YES—Go to step 13.

NO—Short to power in the right side wire harness; replace the right side wire harness, then clear the DTC. ■

13. Turn the ignition switch to LOCK (0).

14. Connect the SRS inflator simulator (jumper connector) and simulator lead H to the right side wire harness 2P connector (A).

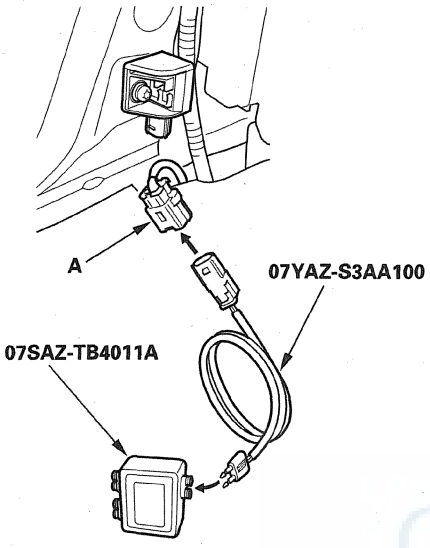

15. Measure the resistance between SRS unit connector C (28P) terminals No. 15 and No. 16. There should be less than 1.0 Ω.

SRS UNIT CONNECTOR C (28P)

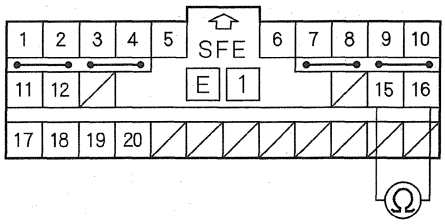

Wire side of female terminals

Is the resistance as specified?

YES—Faulty right side impact sensor (first) or SRS unit; replace the right side impact sensor (first) (see page 24-216), then clear the DTC. If the problem is still present, replace the SRS unit (see page 24-215). ■

NO—Open in the right side wire harness; replace the right side wire harness, then clear the DTC. ■

HONDA

DTC Troubleshooting (cont'd)

DTC 44-Cx ("x" can be 0 thru 9 or A thru F): Faulty Power Supply to the Right Side Impact Sensor (first)

NOTE: Before doing this troubleshooting procedure, review SRS Precautions and Procedures (see page 24-14), General Troubleshooting Information (see page 24-23), and Battery Terminal Disconnection and Reconnection (see page 22-91).

1. Clear the DTC memory (see page 24-24).
2. Turn the ignition switch to ON (II), and check that the SRS indicator comes on for about 6 seconds and then goes off.

   Does the SRS indicator stay on, and is DTC 44-Cx indicated?

   YES—Go to step 3.

   NO—Intermittent failure, the system is OK at this time. Go to Troubleshooting Intermittent Failures (see page 24-25). If another DTC is indicated, troubleshoot the DTC. ■
3. Turn the ignition switch to LOCK (0).
4. Disconnect the negative cable from the battery, then wait at least 3 minutes.
5. Disconnect SRS unit connector C (28P) from the SRS unit (see step 10 on page 24-22).
6. Disconnect the right side wire harness 2P connector (A) from the right side impact sensor (first).

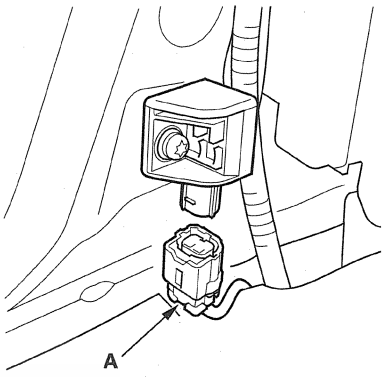

7. Measure the resistance between SRS unit connector C (28P) terminal No. 15 and body ground. There should be an open circuit or at least 1 MΩ.

SRS UNIT CONNECTOR C (28P)

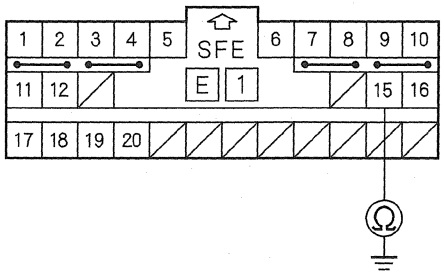

Wire side of female terminals

Is the resistance as specified?

YES—Go to step 8.

NO—Short to ground in the right side wire harness; replace the right side wire harness, then clear the DTC. ■

8. Measure the resistance between SRS unit connector C (28P) terminals No. 15 and No. 16. There should be an open circuit or at least 1 MΩ.

SRS UNIT CONNECTOR C (28P)

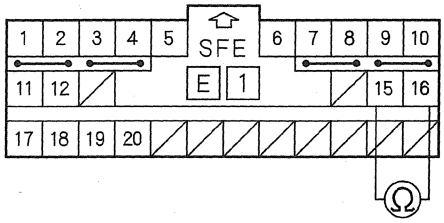

Wire side of female terminals

Is the resistance as specified?

YES—Faulty right side impact sensor (first) or SRS unit; replace the right side impact sensor (first) (see page 24-216), then clear the DTC. If the problem is still present, replace the SRS unit (see page 24-215). ■

NO—Short to another wire in the right side wire harness; replace the right side wire harness, then clear the DTC. ■

DTC Troubleshooting (cont'd)

DTC 43-2x, 43-8x, 43-9x, 43-Bx ("x" can be 0 thru 9 or A thru F): Internal Failure of the Left Side Impact Sensor (first)

NOTE: Before doing this troubleshooting procedure, review SRS Precautions and Procedures (see page 24-14) and General Troubleshooting Information (see page 24-23).

1. Clear the DTC memory (see page 24-24).
2. Turn the ignition switch to ON (II), and check that the SRS indicator comes on for about 6 seconds and then goes off.
3. Read the DTC (see page 24-23).

   Is DTC 43-2x, 43-8x, 43-9x, or 43-Bx indicated?

   YES—Faulty left side impact sensor (first); replace the left front impact sensor (first) (see page 24-216), then clear the DTC. If the DTC is still present, replace the SRS unit (see page 24-215). ■

   NO—Intermittent failure, the system is OK at this time. Go to Troubleshooting Intermittent Failures (see page 24-25). If another DTC is indicated, troubleshoot the DTC. ■

DTC 44-2x, 44-8x, 44-9x, 44-Bx ("x" can be 0 thru 9 or A thru F): Internal Failure of the Right Side Impact Sensor (first)

NOTE: Before doing this troubleshooting procedure, review SRS Precautions and Procedures (see page 24-14) and General Troubleshooting Information (see page 24-23).

1. Clear the DTC memory (see page 24-24).
2. Turn the ignition switch to ON (II), and check that the SRS indicator comes on for about 6 seconds and then goes off.
3. Read the DTC (see page 24-23).

   Is DTC 44-2x, 44-8x, 44-9x, or 44-Bx indicated?

   YES—Faulty right side impact sensor (first); replace the right front impact sensor (first) (see page 24-216), then clear the DTC. If the DTC is still present, replace the SRS unit (see page 24-215). ■

   NO—Intermittent failure, the system is OK at this time. Go to Troubleshooting Intermittent Failures (see page 24-25). If another DTC is indicated, troubleshoot the DTC. ■

DTC 45-1x ("x" can be 0 thru 9 or A thru F): No Signal from the Left Side Impact Sensor (second)

Special Tools Required
- SRS inflator simulator 07SAZ-TB4011A
- SRS simulator lead H 07YAZ-S3AA100

NOTE: Before doing this troubleshooting procedure, review SRS Precautions and Procedures (see page 24-14), General Troubleshooting Information (see page 24-23), and Battery Terminal Disconnection and Reconnection (see page 22-91).

1. Clear the DTC memory (see page 24-24).

2. Turn the ignition switch to ON (II), and check that the SRS indicator comes on for about 6 seconds and then goes off.

   Does the SRS indicator stay on, and is DTC 45-1x indicated?

   YES—Go to step 3.

   NO—Intermittent failure, the system is OK at this time. Go to Troubleshooting Intermittent Failures (see page 24-25). If another DTC is indicated, troubleshoot the DTC. ■

3. Turn the ignition switch to LOCK (0).

4. Disconnect the negative cable from the battery, then wait at least 3 minutes.

5. Check the connections between the SRS unit connector C (28P) and the SRS unit (see page 24-215), between the left side wire harness 2P connector and the left side impact sensor (second) (see page 24-217), at left side wire harness 16P connector C655 and right side wire harness connector C655 (see page 22-42).

   Are the connections OK?

   YES—Go to step 6.

   NO—Repair the poor connections, then clear the DTC, and retest.

6. Disconnect SRS unit connector C (28P) from the SRS unit (see step 10 on page 24-22).

7. Disconnect the left side wire harness 2P connector (A) from the left side impact sensor (second).

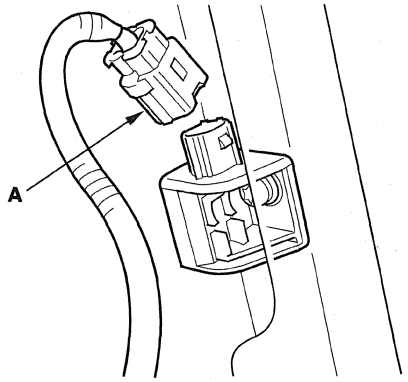

8. Measure the resistance between SRS unit connector C (28P) terminals No. 17 and No. 18. There should be an open circuit or at least 1 MΩ.

SRS UNIT CONNECTOR C (28P)

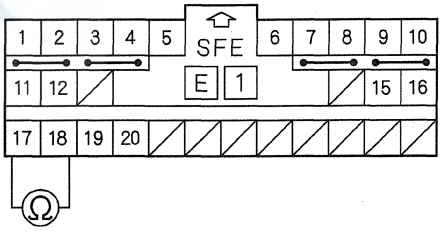

Wire side of female terminals

Is the resistance as specified?

YES—Go to step 9.

NO—Short to another wire in the left side wire harness or the right side wire harness; replace the faulty harness, then clear the DTC. ■

(cont'd)

DTC Troubleshooting (cont'd)

9. Measure the resistance between SRS unit connector C (28P) terminal No. 17 and body ground, and between terminal No. 18 and body ground. There should be an open circuit or at least 1 MΩ.

SRS UNIT CONNECTOR C (28P)

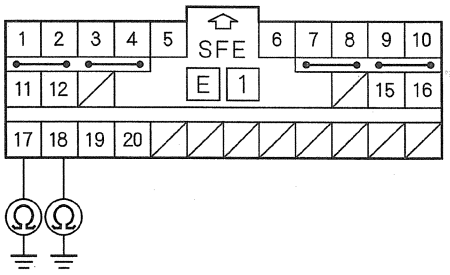

Wire side of female terminals

Is the resistance as specified?

YES—Go to step 10.

NO—Short to ground in the left side wire harness or the right side wire harness; replace the faulty harness, then clear the DTC. ■

10. Reconnect the negative cable to the battery.

11. Turn the ignition switch to ON (II).

12. Measure the voltage between SRS unit connector C (28P) terminal No. 17 and body ground, and between terminal No. 18 and body ground. There should be less than 0.2 V.

SRS UNIT CONNECTOR C (28P)

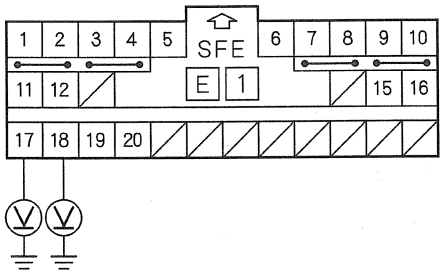

Wire side of female terminals

Is the voltage as specified?

YES—Go to step 13.

NO—Short to power in the left side wire harness or right side wire harness; replace the faulty harness, then clear the DTC. ■

13. Turn the ignition switch to LOCK (0).

14. Connect the SRS inflator simulator (jumper connector) and simulator lead H to the left side wire harness 2P connector (A).

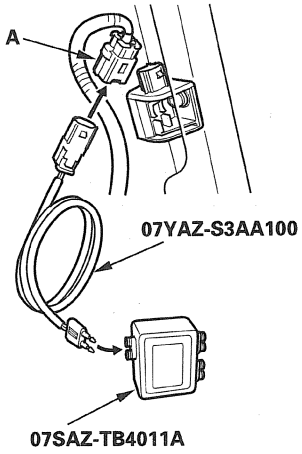

15. Measure the resistance between SRS unit connector C (28P) terminals No. 17 and No. 18. There should be less than 1.0 Ω.

SRS UNIT CONNECTOR C (28P)

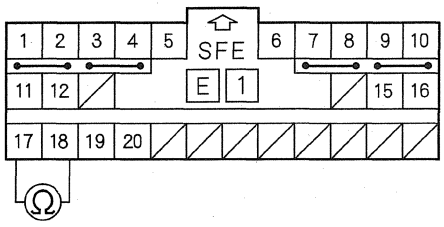

Wire side of female terminals

Is the resistance as specified?

YES—Faulty left side impact sensor (second) or SRS unit; replace the left side impact sensor (second) (see page 24-217), then clear the DTC. If the problem is still present, replace the SRS unit (see page 24-215). ■

NO—Open in the left side wire harness or the right side wire harness; replace the faulty harness, then clear the DTC. ■

DTC 45-Cx ("x" can be 0 thru 9 or A thru F): Faulty Power Supply to the Left Side Impact Sensor (second)

NOTE: Before doing this troubleshooting procedure, review SRS Precautions and Procedures (see page 24-14), General Troubleshooting Information (see page 24-23), and Battery Terminal Disconnection and Reconnection (see page 22-91).

1. Clear the DTC memory (see page 24-24).
2. Turn the ignition switch to ON (II), and check that the SRS indicator comes on for about 6 seconds and then goes off.

   Does the SRS indicator stay on, and is DTC 45-Cx indicated?

   YES—Go to step 3.

   NO—Intermittent failure, the system is OK at this time. Go to Troubleshooting Intermittent Failures (see page 24-25). If another DTC is indicated, troubleshoot the DTC. ■
3. Turn the ignition switch to LOCK (0).
4. Disconnect the negative cable from the battery, then wait at least 3 minutes.

(cont'd)

DTC Troubleshooting (cont'd)

5. Disconnect SRS unit connector C (28P) from the SRS unit (see step 10 on page 24-22).

6. Disconnect the left side wire harness 2P connector (A) from the left side impact sensor (second).

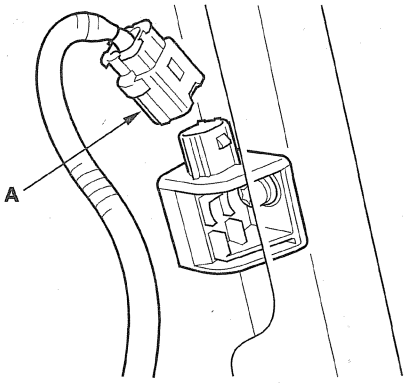

7. Measure the resistance between SRS unit connector C (28P) terminal No. 17 and body ground. There should be an open circuit or at least 1 MΩ.

SRS UNIT CONNECTOR C (28P)

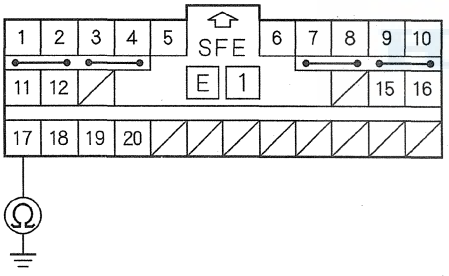

Wire side of female terminals

Is the resistance as specified?

YES—Go to step 8.

NO—Short to ground in the left side wire harness or the right side wire harness; replace the faulty harness, then clear the DTC. ■

8. Measure the resistance between SRS unit connector C (28P) terminals No. 17 and No. 18. There should be an open circuit or at least 1 MΩ.

SRS UNIT CONNECTOR C (28P)

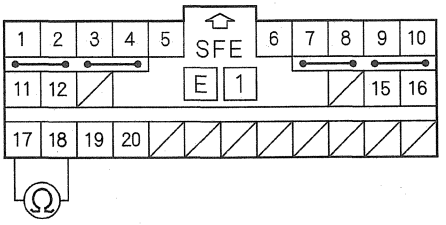

Wire side of female terminals

Is the resistance as specified?

YES—Faulty left side impact sensor (second) or SRS unit; replace the sensor (second) (see page 24-217), then clear the DTC. If the problem is still present, replace the SRS unit (see page 24-215). ■

NO—Short to another wire in the left side wire harness or the right side wire harness; replace the faulty harness, then clear the DTC. ■

DTC 46-1x ("x" can be 0 thru 9 or A thru F): No Signal from the Right Side Impact Sensor (second)

Special Tools Required
- SRS inflator simulator 07SAZ-TB4011A
- SRS simulator lead H 07YAZ-S3AA100

NOTE: Before doing this troubleshooting procedure, review SRS Precautions and Procedures (see page 24-14), General Troubleshooting Information (see page 24-23), and Battery Terminal Disconnection and Reconnection (see page 22-91).

1. Clear the DTC memory (see page 24-24).

2. Turn the ignition switch to ON (II), and check that the SRS indicator comes on for about 6 seconds and then goes off.

   Does the SRS indicator stay on, and is DTC 46-1x indicated?

   YES—Go to step 3.

   NO—Intermittent failure, the system is OK at this time. Go to Troubleshooting Intermittent Failures (see page 24-25). If another DTC is indicated, troubleshoot the DTC. ■

3. Turn the ignition switch to LOCK (0).

4. Disconnect the negative cable from the battery, then wait at least 3 minutes.

5. Check the connections between SRS unit connector C (28P) and the SRS unit (see page 24-215), between the right side wire harness 2P connector and the right side impact sensor (second) (see page 24-217), at right side wire harness 16P connector C655 and left side wire harness connector C655 (see page 22-42), at left side wire harness 16P connector C604 and right side wire harness connector C604 (see page 22-40).

   Are the connections OK?

   YES—Go to step 6.

   NO—Repair the poor connections, then clear the DTC, and retest.

6. Disconnect SRS unit connector C (28P) from the SRS unit (see step 10 on page 24-22).

7. Disconnect the right side wire harness 2P connector (A) from the right side impact sensor (second).

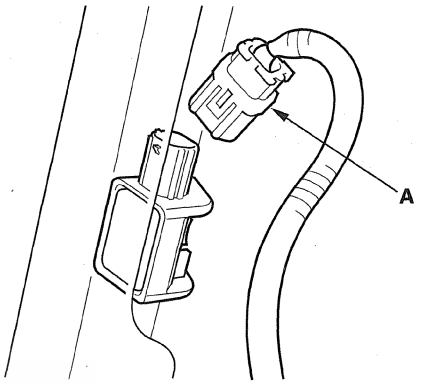

8. Measure the resistance between SRS unit connector C (28P) terminals No. 19 and No. 20. There should be an open circuit or at least 1 MΩ.

SRS UNIT CONNECTOR C (28P)

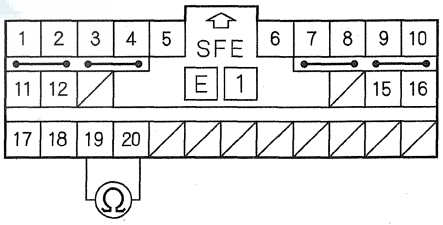

Wire side of female terminals

Is the resistance as specified?

YES—Go to step 9.

NO—Short to another wire in the right side wire harness or the left side wire harness; replace the faulty harness, then clear the DTC. ■

(cont'd)

DTC Troubleshooting (cont'd)

9. Measure the resistance between SRS unit connector C (28P) terminal No. 19 and body ground, and between terminal No. 20 and body ground. There should be an open circuit or at least 1 MΩ.

SRS UNIT CONNECTOR C (28P)

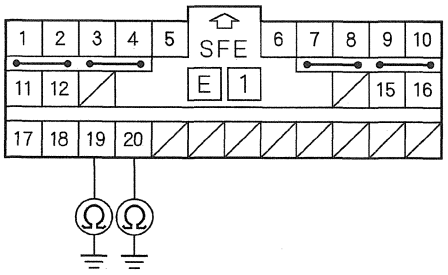

Wire side of female terminals

Is the resistance as specified?

YES—Go to step 10.

NO—Short to ground in the right side wire harness or the left side wire harness; replace the faulty harness, then clear the DTC.■

10. Reconnect the negative cable to the battery.

11. Turn the ignition switch to ON (II).

12. Measure the voltage between SRS unit connector C (28P) terminal No. 19 and body ground, and between terminal No. 20 and body ground. There should be less than 0.2 V.

SRS UNIT CONNECTOR C (28P)

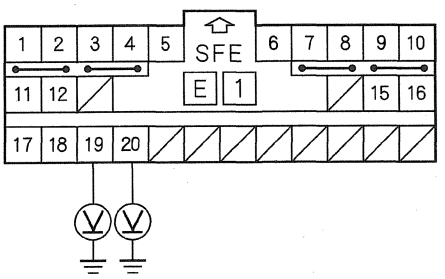

Wire side of female terminals

Is the voltage as specified?

YES—Go to step 13.

NO—Short to power in the right side wire harness or the left the side wire harness; replace the faulty harness, then clear the DTC.■

13. Turn the ignition switch to LOCK (0).

14. Connect the SRS inflator simulator (jumper connector) and simulator lead H to the right side wire harness 2P connector (A).

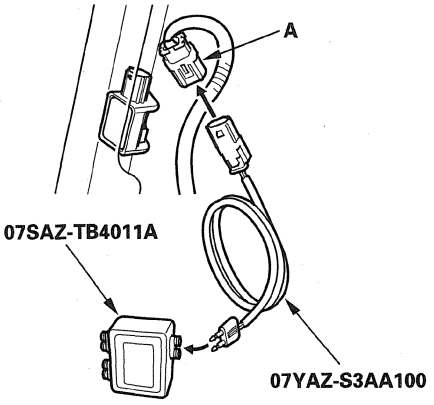

15. Measure the resistance between SRS unit connector C (28P) terminals No. 19 and No. 20. There should be less than 1.0 Ω.

SRS UNIT CONNECTOR C (28P)

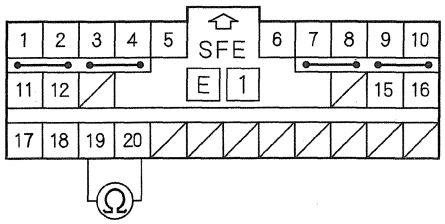

Wire side of female terminals

Is the resistance as specified?

YES—Faulty right side impact sensor (second) or SRS unit; replace the right side impact sensor (second) (see page 24-217), then clear the DTC. If the problem is still present, replace the SRS unit (see page 24-215). ■

NO—Open in the right side wire harness or the left side wire harness; replace the faulty harness, then clear the DTC. ■

DTC 46-Cx ("x" can be 0 thru 9 or A thru F): Faulty Power Supply to the Right Side Impact Sensor (second)

NOTE: Before doing this troubleshooting procedure, review SRS Precautions and Procedures (see page 24-14), General Troubleshooting Information (see page 24-23), and Battery Terminal Disconnection and Reconnection (see page 22-91).

1. Clear the DTC memory (see page 24-24).
2. Turn the ignition switch to ON (II), and check that the SRS indicator comes on for about 6 seconds and then goes off.

   Does the SRS indicator stay on, and is DTC 46-Cx indicated?

   YES—Go to step 3.

   NO—Intermittent failure, the system is OK at this time. Go to Troubleshooting Intermittent Failures (see page 24-25). If another DTC is indicated, troubleshoot the DTC. ■
3. Turn the ignition switch to LOCK (0).
4. Disconnect the negative cable from the battery, then wait at least 3 minutes.

(cont'd)

DTC Troubleshooting (cont'd)

5. Disconnect SRS unit connector C (28P) from the SRS unit (see step 10 on page 24-22).

6. Disconnect the right side wire harness 2P connector (A) from the right side impact sensor (second).

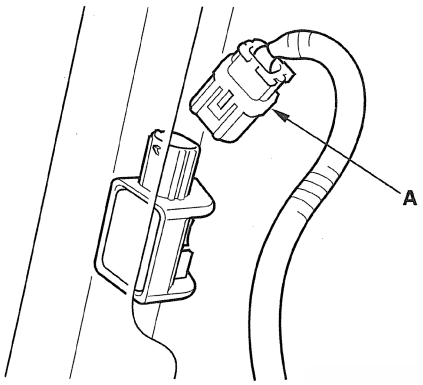

7. Measure the resistance between SRS unit connector C (28P) terminal No. 19 and body ground. There should be an open circuit or at least 1 MΩ.

SRS UNIT CONNECTOR C (28P)

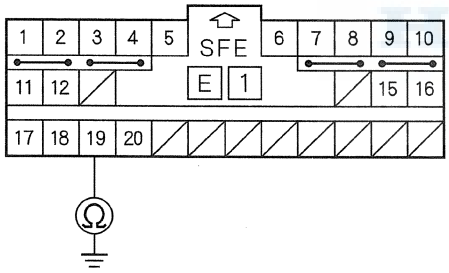

Wire side of female terminals

Is the resistance as specified?

YES—Go to step 8.

NO—Short to ground in the right side wire harness or the left side wire harness; replace the faulty harness, then clear the DTC. ■

8. Measure the resistance between SRS unit connector C (28P) terminals No. 19 and No. 20. There should be an open circuit or at least 1 MΩ.

SRS UNIT CONNECTOR C (28P)

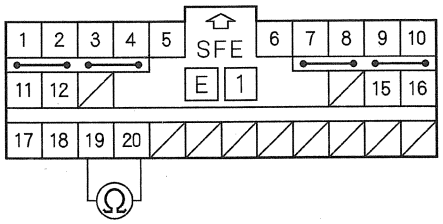

Wire side of female terminals

Is the resistance as specified?

YES—Faulty right side impact sensor (second) or SRS unit; replace the right side impact sensor (second) (see page 24-217), then clear the DTC. If the problem is still present, replace the SRS unit (see page 24-215). ■

NO—Short to another wire in the right side wire harness or the left side wire harness; replace the faulty harness, then clear the DTC. ■

DTC 45-2x, 45-8x, 45-9x, 45-Bx ("x" can be 0 thru 9 or A thru F): Internal Failure of the Left Side Impact Sensor (second)

NOTE: Before doing this troubleshooting procedure, review SRS Precautions and Procedures (see page 24-14), General Troubleshooting Information (see page 24-23).

1. Clear the DTC memory (see page 24-24).
2. Turn the ignition switch to ON (II), and check that the SRS indicator comes on for about 6 seconds and then goes off.
3. Read the DTC (see page 24-23).

   Is DTC 45-2x, 45-8x, 45-9x, or 45-Bx indicated?

   YES—Faulty left side impact sensor (second); replace the left side impact sensor (second) (see page 24-217), then clear the DTC. If the DTC is still present, replace the SRS unit (see page 24-215). ■

   NO—Intermittent failure, the system is OK at this time. Go to Troubleshooting Intermittent Failures (see page 24-25). If another DTC is indicated, troubleshoot the DTC. ■

DTC 46-2x, 46-8x, 46-9x, 46-Bx ("x" can be 0 thru 9 or A thru F): Internal Failure of the Right Side Impact Sensor (second)

NOTE: Before doing this troubleshooting procedure, review SRS Precautions and Procedures (see page 24-14), General Troubleshooting Information (see page 24-23).

1. Clear the DTC memory (see page 24-24).
2. Turn the ignition switch to ON (II), and check that the SRS indicator comes on for about 6 seconds and then goes off.
3. Read the DTC (see page 24-23).

   Is DTC 46-2x, 46-8x, 46-9x, or 46-Bx indicated?

   YES—Faulty right side impact sensor (second); replace the right side impact sensor (second) (see page 24-217), then clear the DTC. If the DTC is still present, replace the SRS unit (see page 24-215). ■

   NO—Intermittent failure, the system is OK at this time. Go to Troubleshooting Intermittent Failures (see page 24-25). If another DTC is indicated, troubleshoot the DTC. ■

DTC Troubleshooting (cont'd)

DTC 51-xx, 52-xx, 53-xx, 54-xx, 55-xx ("x" can be 0 thru 9 or A thru F): Internal Failure of the SRS Unit

NOTE:
- Before troubleshooting any of these DTCs, check the battery/system voltage and battery cable connections. If the voltage is low, repair the charging system, test and charge the battery, or replace the battery before troubleshooting the SRS. If the battery/system voltage is now OK, ask the client if the battery ever went dead or if the engine was started and run with the battery in as low state of charge. A dead battery may trigger one of these DTCs.
- Before doing this troubleshooting procedure, review SRS Precautions and Procedures (see page 24-14) and General Troubleshooting Information (see page 24-23).

1. Clear the DTC memory (see page 24-24).
2. Turn the ignition switch to ON (II), then wait for 10 seconds.
3. Check that the SRS indicator goes off.

   Does the SRS indicator goes off?

   YES—Intermittent failure, the system is OK at this time. Go to Troubleshooting Intermittent Failures (see page 24-25). If another DTC is indicated, troubleshoot the DTC. ■

   NO—Replace the SRS unit (see page 24-215). ■

DTC Ex-11 ("x" can be 0 thru 9 or A thru F): Control Operation Recorded

NOTE: Before doing this troubleshooting procedure, review SRS Precautions and Procedures (see page 24-14), General Troubleshooting Information (see page 24-23).

1. Clear the DTC memory (see page 24-24).
2. Turn the ignition switch to ON (II), and check that the SRS indicator comes on for about 6 seconds and then goes off.
3. Read the DTC (see page 24-23).

   Is DTC Ex-11 indicated?

   YES—Faulty SRS unit; replace the SRS unit (see page 24-215). ■

   NO—Intermittent failure, the system is OK at this time. Go to Troubleshooting Intermittent Failures (see page 24-25). If another DTC is indicated, troubleshoot the DTC. ■

DTC 61-1x ("x" can be 0 thru 9 or A thru F): Open in the Driver's Seat Belt Buckle Switch

NOTE: Before doing this troubleshooting procedure, review SRS Precautions and Procedures (see page 24-14), General Troubleshooting Information (see page 24-23), and Battery Terminal Disconnection and Reconnection (see page 22-91).

1. Clear the DTC memory (see page 24-24).
2. Turn the ignition switch to ON (II), then buckle and unbuckle the left side seat belt several times.
3. Read the DTC (see page 24-23).

   Is DTC 61-1x indicated?

   YES—Go to step 4.

   NO—Intermittent failure, the system is OK at this time. Go to Troubleshooting Intermittent Failures (see page 24-25). If another DTC is indicated, troubleshoot the DTC. ■
4. Turn the ignition switch to LOCK (0).
5. Disconnect the driver's seat wire harness 4P connector from the driver's seat belt buckle switch 4P connector (A).

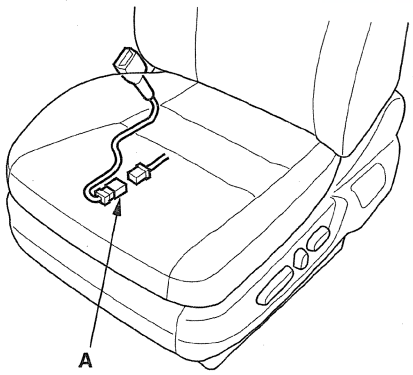

6. Buckle the driver's seat belt.
   - Measure the resistance between driver's seat belt buckle switch 4P connector terminals No. 1 and No. 3. There should be less then 1.0 Ω.
   - Measure the resistance between terminals No. 2 and No. 3 of the same connector. There should be an open circuit or at least 1 MΩ.

DRIVER'S SEAT BELT BUCKLE SWITCH 4P CONNECTOR

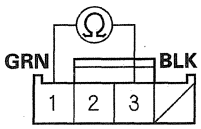

Wire side of female terminals

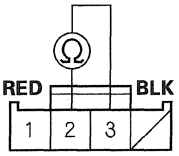

Wire side of female terminals

Are the resistances as specified?

YES—Go to step 7.

NO—Replace the driver's seat belt buckle assembly (see page 24-6), then clear the DTC. ■

(cont'd)

DTC Troubleshooting (cont'd)

7. Unbuckle the driver's seat belt.

   - Measure the resistance between driver's seat belt buckle switch 4P connector terminals No. 2 and No. 3. There should be less than 1.0 Ω.
   - Measure the resistance between terminals No. 1 and No. 3 of the same connector. There should be an open circuit or at least 1 MΩ.

DRIVER'S SEAT BELT BUCKLE SWITCH 4P CONNECTOR

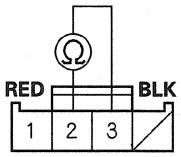

Wire side of female terminals

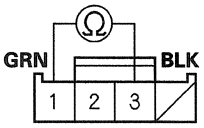

Wire side of female terminals

Are the resistances as specified?

YES—Go to step 8.

NO—Replace the driver's seat belt buckle assembly (see page 24-6), then clear the DTC. ■

8. Measure the resistance between driver's seat wire harness 4P connector terminal No. 3 and body ground. There should be less than 1.0 Ω.

DRIVER'S SEAT WIRE HARNESS 4P CONNECTOR

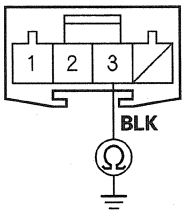

Terminal side of male terminals

Is the resistance as specified?

YES—Go to step 9.

NO—Open in the driver's seat wire harness or left side wire harness, or poor ground connection at G601 (see page 22-40). If G601 is OK, replace the faulty harness, then clear the DTC. ■

9. Disconnect the negative cable from the battery, then wait at least 3 minutes.

10. Disconnect SRS unit connector B (28P) from the SRS unit (see step 10 on page 24-22).

11. Measure the resistance between SRS unit connector B (28P) terminal No. 12 and the driver's seat wire harness 4P connector terminal No. 1. There should be less than 1.0 Ω.

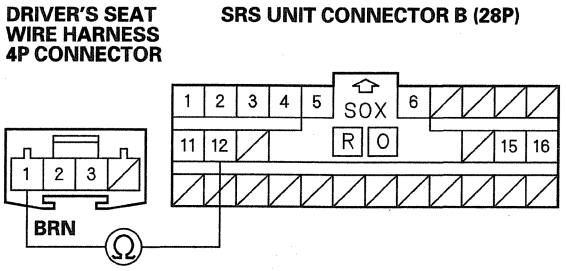

Is the resistance as specified?

YES—Go to step 12.

NO—Open in the driver's seat wire harness or the left side wire harness; replace the faulty harness, then clear the DTC. ■

12. Measure the resistance between SRS unit connector B (28P) terminal No. 11 and the driver's seat wire harness 4P connector terminal No. 2. There should be less than 1.0 Ω.

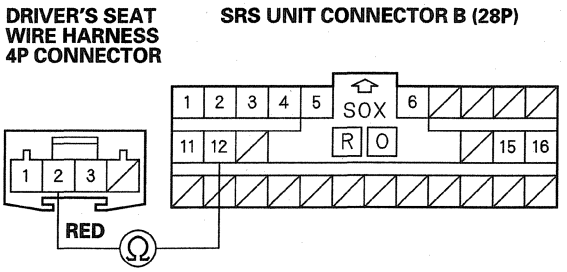

Is the resistance as specified?

YES—Faulty SRS unit; replace the SRS unit (see page 24-215). ■

NO—Open in the driver's seat wire harness, left side wire harness, or the driver's under-dash fuse/relay box, or poor connection at the left side wire harness. Check the connection at the left side wire harness and the driver's under-dash fuse/relay box. If the connection is OK, replace the faulty harness or part, then clear the DTC. ■

DTC Troubleshooting (cont'd)

DTC 61-2x ("x" can be 0 thru 9 or A thru F): Short in the Driver's Seat Belt Buckle Switch

NOTE: Before doing this troubleshooting procedure, review SRS Precautions and Procedures (see page 24-14), General Troubleshooting Information (see page 24-23), and Battery Terminal Disconnection and Reconnection (see page 22-91).

1. Clear the DTC memory (see page 24-24).
2. Turn the ignition switch to ON (II), then buckle and unbuckle the left side seat belt several times.
3. Read the DTC (see page 24-23).

   Is DTC 61-2x indicated?

   YES—Go to step 4.

   NO—Intermittent failure, the system is OK at this time. Go to Troubleshooting Intermittent Failures (see page 24-25). If another DTC is indicated, troubleshoot the DTC. ■
4. Check the No. 21 (10 A) fuse in the driver's under-dash fuse/relay box.

   Is the fuse OK?

   YES—Go to step 5.

   NO—Short to ground in the driver's under-dash fuse/relay box No. 21 (10 A) fuse circuit. After No. 21 (10 A) fuse is replaced, then clear the DTC. ■
5. Turn the ignition switch to LOCK (0).
6. Disconnect the driver's seat wire harness 4P connector from the driver's seat belt buckle switch 4P connector (A).

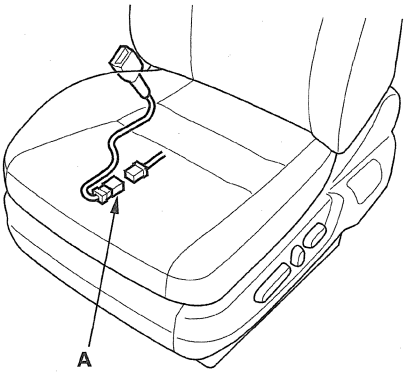

7. Buckle the driver's seat belt.
   - Measure the resistance between driver's seat belt buckle switch 4P connector terminals No. 1 and No. 3. There should be less than 1.0 Ω.
   - Measure the resistance between terminals No. 2 and No. 3 of the same connector. There should be an open circuit or at least 1 MΩ.

DRIVER'S SEAT BELT BUCKLE SWITCH 4P CONNECTOR

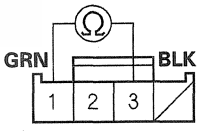

Wire side of female terminals

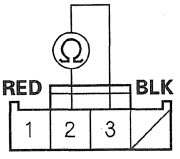

Wire side of female terminals

Are the resistances as specified?

YES—Go to step 8.

NO—Replace the driver's seat belt buckle assembly (see page 24-6), then clear the DTC. ■

8. Unbuckle the driver's seat belt.

   - Measure the resistance between driver's seat belt buckle switch 4P connector terminals No. 2 and No. 3. There should be less than 1.0 Ω.
   - Measure the resistance between terminals No. 1 and No. 3 of the same connector. There should be an open circuit or at least 1 MΩ.

DRIVER'S SEAT BELT BUCKLE SWITCH 4P CONNECTOR

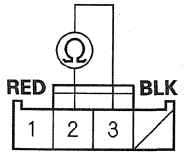

Wire side of female terminals

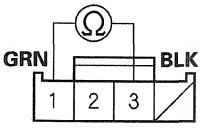

Wire side of female terminals

Are the resistances as specified?

YES—Go to step 9.

NO—Replace the driver's seat belt buckle assembly (see page 24-6), then clear the DTC. ■

9. Measure the resistance between driver's seat belt buckle switch 4P connector terminal No. 1 and body ground, and between terminal No. 2 and body ground. There should be an open circuit or at least 1 MΩ.

DRIVER'S SEAT BELT BUCKLE SWITCH 4P CONNECTOR

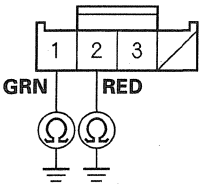

Wire side of female terminals

Is the resistance as specified?

YES—Go to step 10.

NO—Replace the driver's seat belt buckle assembly (see page 24-6), then clear the DTC. ■

10. Disconnect the negative cable from the battery, then wait at least 3 minutes.

11. Disconnect SRS unit connector B (28P) from the SRS unit (see step 10 on page 24-22).

(cont'd)

DTC Troubleshooting (cont'd)

12. Measure the resistance between driver's seat wire harness 4P connector terminal No. 2 and body ground. There should be an open circuit or at least 1 MΩ.

    NOTE: Some resistance will be read by some meters since the MICU also monitors the seat belt buckle switch.

DRIVER'S SEAT WIRE HARNESS 4P CONNECTOR

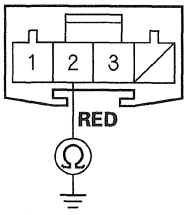

Terminal side of male terminals

Is the resistance as specified?

YES—Go to step 13.

NO—Short to ground in the driver's seat wire harness, the left side wire harness, or the MICU. Replace the faulty harness or part, then clear the DTC.■

13. Disconnect the driver's seat belt tension reducer solenoid 2P connector (see page 22-445). Measure the resistance between driver's seat wire harness 4P connector terminal No. 1 and body ground. There should be an open circuit or at least 1 MΩ.

DRIVER'S SEAT WIRE HARNESS 4P CONNECTOR

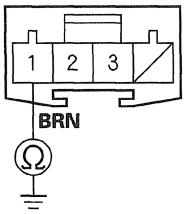

Terminal side of male terminals

Is the resistance as specified?

YES—Faulty SRS unit; replace the SRS unit (see page 24-215).■

NO—Short to ground in the driver's seat wire harness or the left side wire harness; replace the faulty harness, then clear the DTC.■

DTC 62-1x ("x" can be 0 thru 9 or A thru F): Open in the Front Passenger's Seat Belt Buckle Switch

NOTE: Before doing this troubleshooting procedure, review SRS Precautions and Procedures (see page 24-14), General Troubleshooting Information (see page 24-23), and Battery Terminal Disconnection and Reconnection (see page 22-91).

1. Clear the DTC memory (see page 24-24).
2. Turn the ignition switch to ON (II), then buckle and unbuckle the right side seat belt several times.
3. Read the DTC (see page 24-23).

   Is DTC 62-1x indicated?

   YES—Go to step 4.

   NO—Intermittent failure, the system is OK at this time. Go to Troubleshooting Intermittent Failures (see page 24-25). If another DTC is indicated, troubleshoot the DTC. ■
4. Turn the ignition switch to LOCK (0).
5. Disconnect the front passenger's seat belt buckle switch 4P connector (A) from the front passenger's seat wire harness.

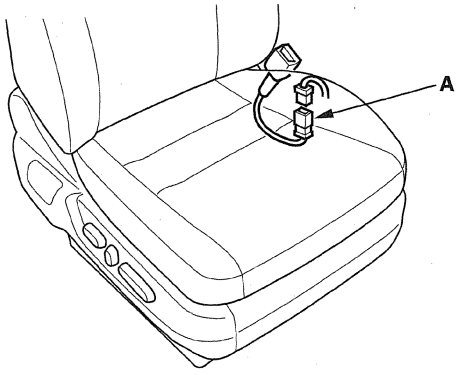

6. Buckle the front passenger's seat belt.
   - Measure the resistance between front passenger's seat belt buckle switch 4P connector terminals No. 1 and No. 3. There should be less than 1.0 Ω.
   - Measure the resistance between terminals No. 2 and No. 3 of the same connector. There should be an open circuit or at least 1 MΩ.

FRONT PASSENGER'S SEAT BELT BUCKLE SWITCH 4P CONNECTOR

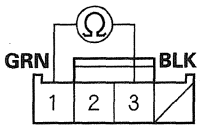

Wire side of female terminals

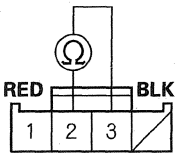

Wire side of female terminals

Are the resistances as specified?

YES—Go to step 7.

NO—Replace the front passenger's seat belt buckle assembly (see page 24-6), then clear the DTC. ■

(cont'd)

DTC Troubleshooting (cont'd)

7. Unbuckle the front passenger's seat belt.

   - Measure the resistance between front passenger's seat belt buckle switch 4P connector terminals No. 2 and No. 3. There should be less than 1.0 Ω.
   - Measure the resistance between terminals No. 1 and No. 3 of the same connector. There should be an open circuit or at least 1 MΩ.

FRONT PASSENGER'S SEAT BELT BUCKLE SWITCH 4P CONNECTOR

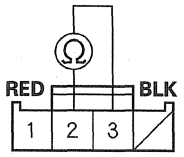

Wire side of female terminals

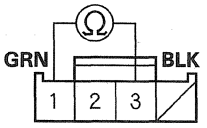

Wire side of female terminals

Are the resistances as specified?

YES—Go to step 8.

NO—Replace the front passenger's seat belt buckle assembly (see page 24-6), then clear the DTC. ■

8. Measure the resistance between front passenger's seat wire harness 4P connector terminal No. 3 and body ground. There should be less than 1.0 Ω.

FRONT PASSENGER'S SEAT WIRE HARNESS 4P CONNECTOR

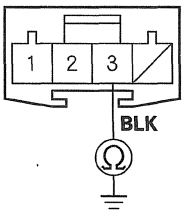

Terminal side of male terminals

Is the resistance as specified?

YES—Go to step 9.

NO—Open in the front passenger's seat wire harness or the right side wire harness, or poor ground connection at G651 (see page 22-44). If G 651 is OK, replace the faulty harness, then clear the DTC. ■

9. Disconnect the negative cable from the battery, then wait at least 3 minutes.

10. Disconnect SRS unit connector B (28P) from the SRS unit (see step 10 on page 24-22).

11. Measure the resistance between SRS unit connector B (28P) terminal No. 16 and the front passenger's seat wire harness 4P connector terminal No. 1. There should be less than 1.0 Ω.

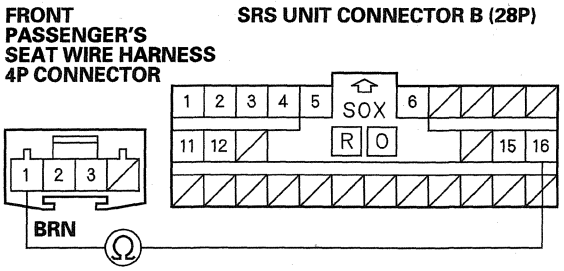

Is the resistance as specified?

YES—Go to step 12.

NO—Open in the front passenger's seat wire harness or right side wire harness; replace the faulty harness, then clear the DTC. ■

12. Measure the resistance between SRS unit connector B (28P) terminal No. 15 and the front passenger's seat wire harness 4P connector terminal No. 2. There should be less than 1.0 Ω.

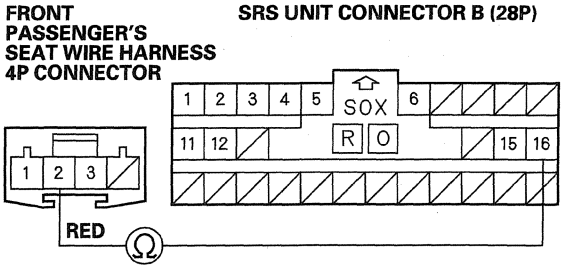

Is the resistance as specified?

YES—Faulty SRS unit; replace the SRS unit (see page 24-215). ■

NO—Open in the front passenger's seat wire harness or the right side wire harness; replace the faulty harness, then clear the DTC. ■

HONDA

DTC Troubleshooting (cont'd)

DTC 62-2x ("x" can be 0 thru 9 or A thru F): Short in the Front Passenger's Seat Belt Buckle Switch

NOTE: Before doing this troubleshooting procedure, review SRS Precautions and Procedures (see page 24-14), General Troubleshooting Information (see page 24-23), and Battery Terminal Disconnection and Reconnection (see page 22-91).

1. Clear the DTC memory (see page 24-24).
2. Turn the ignition switch to ON (II), then buckle and unbuckle the front passenger's seat belt several times.
3. Read the DTC (see page 24-23).

   Is DTC 62-2x indicated?

   YES—Go to step 4.

   NO—Intermittent failure, the system is OK at this time. Go to Troubleshooting Intermittent Failures (see page 24-25). If another DTC is indicated, troubleshoot the DTC. ■
4. Check the No. 21 (10 A) fuse in the driver's under-dash fuse/relay box.

   Is the fuse OK?

   YES—Go to step 5.

   NO—Short to ground in the driver's under-dash fuse/relay box No. 21 (10 A) fuse circuit. After No. 21 (10 A) fuse is replaced, then clear the DTC. ■
5. Turn the ignition switch to LOCK (0).
6. Disconnect the front passenger's seat belt buckle switch 4P connector (A) from the front passenger's seat wire harness.

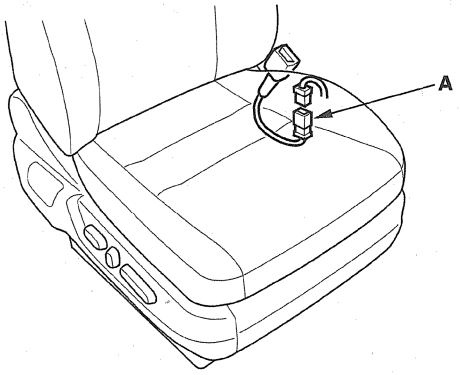

7. Buckle the front passenger's seat belt.
   - Measure the resistance between front passenger's seat belt buckle switch 4P connector terminals No. 1 and No. 3. There should be less than 1.0 Ω.
   - Measure the resistance between terminals No. 2 and No. 3 of the same connector. There should be an open circuit or at least 1 MΩ.

FRONT PASSENGER'S SEAT BELT BUCKLE SWITCH 4P CONNECTOR

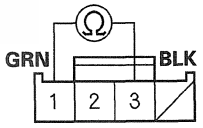

Wire side of female terminals

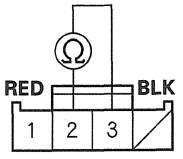

Wire side of female terminals

Are the resistances as specified?

YES—Go to step 8.

NO—Replace the front passenger's seat belt buckle assembly (see page 24-6), then clear the DTC. ■

8. Unbuckle the front passenger's seat belt.

   - Measure the resistance between front passenger's seat belt buckle switch 4P connector terminals No. 2 and No. 3. There should be less than 1.0 Ω.
   - Measure the resistance between terminals No. 1 and No. 3 of the same connector. There should be an open circuit or at least 1 MΩ.

FRONT PASSENGER'S SEAT BELT BUCKLE SWITCH 4P CONNECTOR

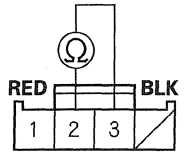

Wire side of female terminals

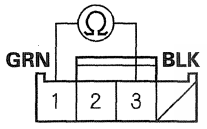

Wire side of female terminals

Are the resistances as specified?

YES—Go to step 9.

NO—Replace the front passenger's seat belt buckle assembly (see page 24-6), then clear the DTC. ■

9. Measure the resistance between front passenger's seat belt buckle switch 4P connector terminal No. 1 and body ground, and between the terminal No. 2 and body ground. There should be an open circuit or at least 1 MΩ.

FRONT PASSENGER'S SEAT BELT BUCKLE SWITCH 4P CONNECTOR

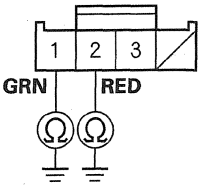

Wire side of female terminals

Is the resistance as specified?

YES—Go to step 10.

NO—Replace the front passenger's seat belt buckle assembly (see page 24-6), then clear the DTC. ■

10. Disconnect the negative cable from the battery, then wait at least 3 minutes.

11. Disconnect SRS unit connector B (28P) from the SRS unit (see step 10 on page 24-22).

(cont'd)

DTC Troubleshooting (cont'd)

12. Measure the resistance between front passenger's seat wire harness 4P connector terminal No. 2 and body ground. There should be an open circuit or at least 1 MΩ.

FRONT PASSENGER'S SEAT WIRE HARNESS 4P CONNECTOR

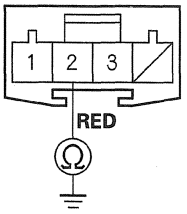

Terminal side of male terminals

Is the resistance as specified?

YES—Go to step 13.

NO—Short to ground in the front passenger's seat wire harness or the right side wire harness; replace the faulty harness, then clear the DTC. ■

13. Disconnect the front passenger's seat belt tension reducer solenoid 2P connector (see page 22-445). Measure the resistance between front passenger's seat wire harness 4P connector terminal No. 1 and body ground. There should be an open circuit or at least 1 MΩ.

FRONT PASSENGER'S SEAT WIRE HARNESS 4P CONNECTOR

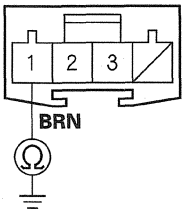

Terminal side of male terminals

Is the resistance as specified?

YES—Faulty SRS unit; replace the SRS unit (see page 24-215). ■

NO—Short to ground in the front passenger's seat wire harness or the right side wire harness; replace the faulty harness, then clear the DTC. ■

DTC 71-11: Open in the Driver's Seat Position Sensor

NOTE:
- Use the HDS to confirm the driver's seat position before proceeding with troubleshooting (see page 24-30).
- Before doing this troubleshooting procedure, review SRS Precautions and Procedures (see page 24-14) and General Troubleshooting Information (see page 24-23).

1. Clear the DTC memory (see page 24-24).

2. Turn the ignition switch to ON (II), and check that the SRS indicator comes on for about 6 seconds and then goes off.

   Does the SRS indicator stay on, and is DTC 71-11 indicated?

   YES—Go to step 3.

   NO—Intermittent failure, the system is OK at this time. Go to Troubleshooting Intermittent Failures (see page 24-25). If another DTC is indicated, troubleshoot the DTC. ■

3. Check the connection between the seat position sensor harness 2P connector and the driver's seat position sensor.

4. Clear the DTC memory.

5. Read the DTC (see page 24-23).

   Is DTC 71-11 indicated?

   YES—Go to step 6.

   NO—Intermittent failure, the system is OK at this time. Go to Troubleshooting Intermittent Failures (see page 24-25). If another DTC is indicated, troubleshoot the DTC. ■

6. Turn the ignition switch to LOCK (0).

7. Remove the rear inner cover (see step 5 on page 20-127).

8. Disconnect the driver's seat wire harness 2P connector (A) from the driver's seat position sensor (B).

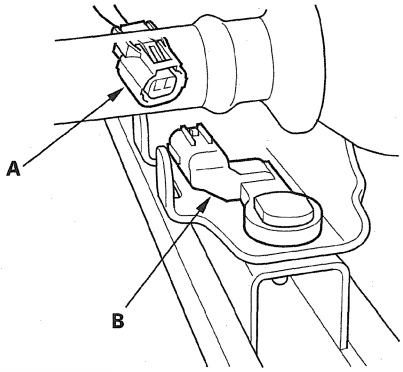

9. Connect the driver's seat wire harness 2P connector terminals No. 1 and No. 2 with a jumper wire.

DRIVER'S SEAT WIRE HARNESS 2P CONNECTOR

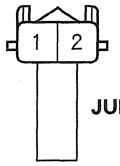

JUMPER WIRE

Wire side of female terminals

10. Disconnect the negative cable from the battery, then wait at least 3 minutes.

(cont'd)

DTC Troubleshooting (cont'd)

11. Disconnect SRS unit connector B (28P) from the SRS unit (see step 10 on page 24-22).

12. Measure the resistance between SRS unit connector B (28P) terminals No. 5 and No. 6. There should be less than 1.0 Ω.

SRS UNIT CONNECTOR B (28P)

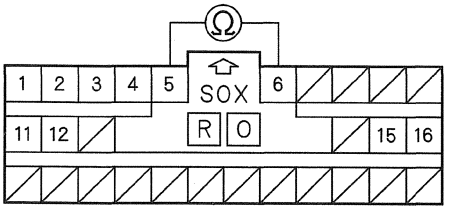

Wire side of female terminals

Is the resistance as specified?

YES—Faulty driver's seat position sensor or SRS unit; replace the driver's seat position sensor (see page 24-223), then clear the DTC. If the problem is still present, replace the SRS unit (see page 24-215). ■

NO—Open in the driver's seat wire harness, the right side wire harness, or the left side wire harness; replace the faulty harness, then clear the DTC. ■

DTC 71-21: Short in the Driver's Seat Position Sensor

NOTE:
- Use the HDS to confirm the driver's seat position before proceeding with troubleshooting (see page 24-30).
- Before doing this troubleshooting procedure, review SRS Precautions and Procedures (see page 24-14), General Troubleshooting Information (see page 24-23).

1. Clear the DTC memory (see page 24-24).

2. Turn the ignition switch to ON (II), and check that the SRS indicator comes on for about 6 seconds and then goes off.

   Does the SRS indicator stay on, and is DTC 71-21 indicated?

   YES—Go to step 3.

   NO—Intermittent failure, the system is OK at this time. Go to Troubleshooting Intermittent Failures (see page 24-25). If another DTC is indicated, troubleshoot the DTC. ■

3. Turn the ignition switch to LOCK (0).

4. Remove the rear inner cover (see step 5 on page 20-127).

5. Disconnect the driver's seat wire harness 2P connector (A) from the driver's seat position sensor (B).

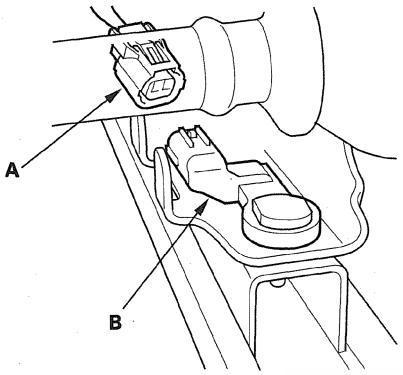

6. Reconnect the negative cable to the battery.

7. Clear the DTC memory.

8. Read the DTC (see page 24-23).

   Is DTC 71-21 indicated?

   YES—Go to step 9.

   NO—Faulty driver's seat position sensor; replace the driver's seat position sensor (see page 24-223), then clear the DTC. ■

9. Turn the ignition switch to LOCK (0).

10. Disconnect the negative cable from the battery, then wait at least 3 minutes.

11. Disconnect SRS unit connector B (28P) from the SRS unit (see step 10 on page 24-22).

12. Measure the resistance between SRS unit connector B (28P) terminals No. 5 and No. 6. There should be an open circuit or at least 1 MΩ.

SRS UNIT CONNECTOR B (28P)

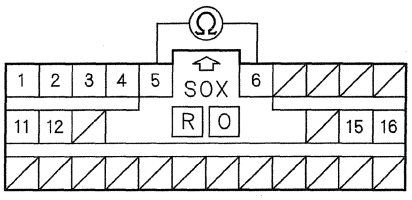

Wire side of female terminals

Is the resistance as specified?

YES—Go to step 13.

NO—Short in the right side wire harness or left side wire harness; replace the faulty harness, then clear the DTC. ■

13. Measure the resistance between SRS unit connector B (28P) terminal No. 5 and body ground, and between terminal No. 6 and body ground. There should be an open circuit or at least 1 MΩ.

SRS UNIT CONNECTOR B (28P)

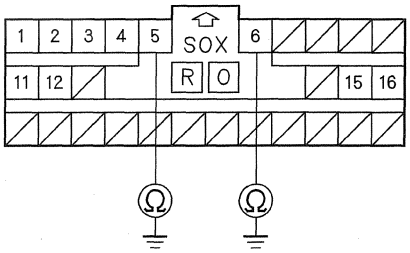

Wire side of female terminals

Is the resistance as specified?

YES—Faulty driver's seat position sensor or SRS unit; replace the driver's seat position sensor (see page 24-223), then clear the DTC. If the problem is still present, replace the SRS unit (see page 24-215). ■

NO—Short in the driver's seat wire harness, the right side wire harness, or the left side wire harness; replace the faulty harness, then clear the DTC. ■

DTC Troubleshooting (cont'd)

DTC 71-22: Short to Power in the Driver's Seat Position Sensor

NOTE:
- Use the HDS to confirm the driver's seat position before proceeding with troubleshooting (see page 24-30).
- Before doing this troubleshooting procedure, review SRS Precautions and Procedures (see page 24-14), General Troubleshooting Information (see page 24-23).

1. Clear the DTC memory (see page 24-24).
2. Turn the ignition switch to ON (II), and check the SRS indicator comes on for about 6 seconds and then goes off.

   Does the SRS indicator stay on, and is DTC 71-22 indicated?

   YES—Go to step 3.

   NO—Intermittent failure, the system is OK at this time. Go to Troubleshooting Intermittent Failures (see page 24-25). If another DTC is indicated, troubleshoot the DTC. ■
3. Turn the ignition switch to LOCK (0).
4. Remove the rear inner cover (see step 5 on page 20-127).
5. Disconnect the driver's seat wire harness 2P connector (A) from the driver's seat position sensor (B).

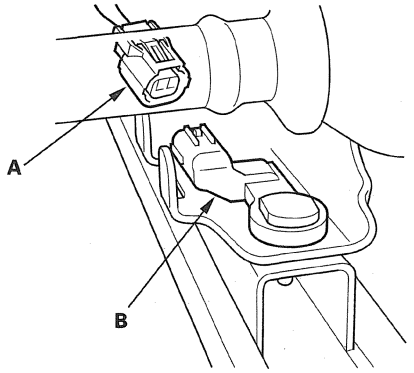

6. Disconnect the negative cable from the battery, then wait at least 3 minutes.
7. Disconnect SRS unit connector B (28P) from the SRS unit (see step 10 on page 24-22).
8. Measure the voltage between SRS unit connector B (28P) terminal No. 5 and body ground, and between terminal No. 6 and body ground. There should be less than 0.2 V.

SRS UNIT CONNECTOR B (28P)

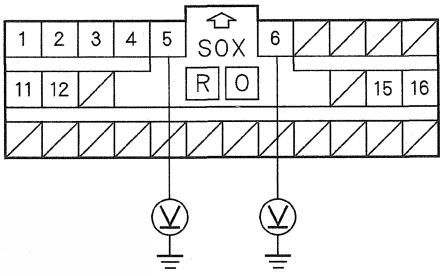

Wire side of female terminals

Is the voltage as specified?

YES—Faulty driver's seat position sensor or SRS unit; replace the driver's seat position sensor (see page 24-223), then clear the DTC. If the problem is still present, replace the SRS unit (see page 24-215). ■

NO—Short to power in the driver's seat wire harness, the right side wire harness, or the left side wire harness; replace the faulty harness, then clear the DTC. ■

DTC 73-1x ("x" can be 0 thru 9 or A thru F): Open in the Driver's E-Pretensioner Motor

NOTE: Before doing this troubleshooting procedure, review SRS Precautions and Procedures (see page 24-14) and General Troubleshooting Information (see page 24-23).

1. Clear the DTC memory (see page 24-24).
2. Turn the ignition switch to ON (II), then wait for 10 seconds.
3. Read the DTC (see page 24-23).

   Is DTC 73-1x indicated?

   YES—Go to step 4.

   NO—Intermittent failure, the system is OK at this time. Go to Troubleshooting Intermittent Failures (see page 24-25). If another DTC is indicated, troubleshoot the DTC. ■
4. Turn the ignition switch to LOCK (0).
5. Disconnect E-pretensioner subharness 5P connector A from the E-pretensioner unit (see page 24-221).
6. Disconnect the E-pretensioner subharness 2P connector from the driver's E-pretensioner motor (see page 24-4).
7. Measure the resistance between E-pretensioner unit connector A (5P) terminal No. 1 and driver's E-pretensioner motor 2P connector terminal No. 2, and between E-pretensioner unit connector A (5P) terminal No. 4 and driver's E-pretensioner motor 2P connector terminal No. 1. There should be less than 1.0 Ω.

E-PRETENSIONER UNIT CONNECTOR A (5P) **DRIVER'S E-PRETENSIONER MOTOR 2P CONNECTOR**

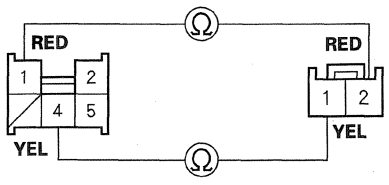

Wire side of female terminals

Is the resistance as specified?

YES—Go to step 8.

NO—Open in the E-pretensioner subharness or the left side wire harness; replace the faulty harness, then clear the DTC. ■

8. Reconnect the driver's E-pretensioner motor 2P connector.
9. Measure the resistance between E-pretensioner unit connector A (5P) terminals No. 1 and No. 4. There should be less than 1.0 Ω.

E-PRETENSIONER UNIT CONNECTOR A (5P)

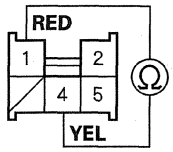

Wire side of female terminals

Is the resistance as specified?

YES—Faulty E-pretensioner unit; replace the E-pretensioner unit (see page 24-221), then clear the DTC. ■

NO—Faulty E-pretensioner motor; replace the driver's E-pretensioner motor (see page 24-4), then clear the DTC. ■

DTC Troubleshooting (cont'd)

DTC 74-2x ("x" can be 0 thru 9 or A thru F): Open in the Front Passenger's E-Pretensioner Motor

NOTE: Before doing this troubleshooting procedure, review SRS Precautions and Procedures (see page 24-14) and General Troubleshooting Information (see page 24-23).

1. Clear the DTC memory (see page 24-24).
2. Turn the ignition switch to ON (II), then wait for 10 seconds.
3. Read the DTC (see page 24-23).

   Is DTC 74-2x indicated?

   YES—Go to step 4.

   NO—Intermittent failure, the system is OK at this time. Go to Troubleshooting Intermittent Failures (see page 24-25). If another DTC is indicated, troubleshoot the DTC. ■
4. Turn the ignition switch to LOCK (0).
5. Disconnect E-pretensioner subharness 14P connector B from the E-pretensioner unit (see page 24-221).
6. Disconnect the E-pretensioner subharness 2P connector from the driver's E-pretensioner motor (see page 24-4).
7. Measure the resistance between E-pretensioner unit connector B (14P) terminal No. 13 and front passenger's E-pretensioner motor 2P connector terminal No. 2, and between E-pretensioner unit connector B (14P) terminal No. 14 and front passenger's E-pretensioner motor 2P connector terminal No. 1. There should be less than 1.0 Ω.

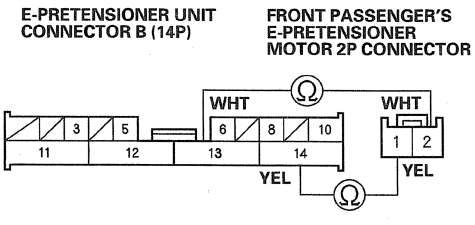

Wire side of female terminals

Is the resistance as specified?

YES—Go to step 8.

NO—Open in the E-pretensioner subharness or the right side wire harness; replace the faulty harness, then clear the DTC. ■

8. Reconnect the front passenger's E-pretensioner motor 2P connector.
9. Measure the resistance between E-pretensioner unit connector B (14P) terminals No. 13 and No. 14. There should be less than 1.0 Ω.

E-PRETENSIONER UNIT CONNECTOR B (14P)

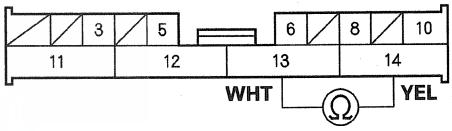

Wire side of female terminals

Is the resistance as specified?

YES—Faulty E-pretensioner unit; replace the E-pretensioner unit (see page 24-221), then clear the DTC. ■

NO—Faulty E-pretensioner motor; replace the front passenger's E-pretensioner motor (see page 24-4), then clear the DTC. ■

DTC 76-3x ("x" can be 0 thru 9 or A thru F): Faulty F-CAN Communication or Internal Failure of the E-Pretensioner Unit

NOTE: Before doing this troubleshooting procedure, review SRS Precautions and Procedures (see page 24-14) and General Troubleshooting Information (see page 24-23).

1. Clear the DTC memory (see page 24-24).
2. Turn the ignition switch to ON (II), then wait for 10 seconds.
3. Read the DTC (see page 24-23).

   Is DTC 76-3x indicated?

   YES—Go to step 4.

   NO—Intermittent failure, the system is OK at this time. Go to Troubleshooting Intermittent Failures (see page 24-25). If another DTC is indicated, troubleshoot the DTC. ■
4. Check for DTCs in the PCM.

   Are any DTCs indicated?

   YES—Troubleshoot the PCM DTCs. ■

   NO—Go to step 5.
5. Turn the ignition switch to LOCK (0).
6. Disconnect E-pretensioner subharness 14P connector B from the E-pretensioner unit (see page 24-221).
7. Disconnect PCM connector E (31P) (see page 11-232).
8. Measure the resistance between E-pretensioner unit connector B (14P) terminal No. 3 and PCM connector E (31P) terminal No. 15, and between E-pretensioner unit connector B (14P) terminal No. 5 and PCM connector E (31P) terminal No. 26. There should be less than 1.0 Ω

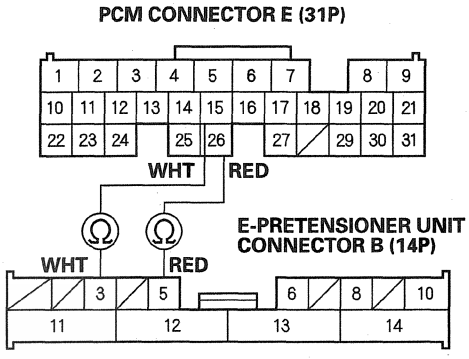

Wire side of female terminals

Is the resistance as specified?

YES—Check for loose terminals and poor connections at E-pretensioner control unit connector B (14P) terminals No. 3 and No. 5. If the terminals and connections are OK, replace the E-pretensioner control unit, and recheck. ■

NO—Repair the high resistance or an open circuit between C662 and the E-pretensioner control unit connector B (14P). ■

DTC Troubleshooting (cont'd)

DTC 76-4x, 76-5x, 76-63 ("x" can be 0 thru 9 or A thru F): Internal Failure of the E-Pretensioner Unit

NOTE: Before doing this troubleshooting procedure, review SRS Precautions and Procedures (see page 24-14) and General Troubleshooting Information (see page 24-23).

1. Clear the DTC memory (see page 24-24).
2. Turn the ignition switch to ON (II), and check that the SRS indicator comes on for about 6 seconds and then goes off.

   Does the SRS indicator stay on, and is DTC 76-4x, 76-5x, or 76-63 indicated?

   YES—Faulty E-pretensioner unit; replace the E-pretensioner unit (see page 24-221), then clear the DTC. ■

   NO—Intermittent failure, the system is OK at this time. Go to Troubleshooting Intermittent Failures (see page 24-25). If another DTC is indicated, troubleshoot the DTC. ■

DTC 76-61: No Signal from the E-Pretensioner Unit

NOTE: Before doing this troubleshooting procedure, review SRS Precautions and Procedures (see page 24-14), General Troubleshooting Information (see page 24-23), and Battery Terminal Disconnection and Reconnection (see page 22-91).

1. Clear the DTC memory (see page 24-24).
2. Turn the ignition switch to ON (II), then wait for 10 seconds.
3. Read the DTC (see page 24-23).

   Is DTC 76-61 indicated?

   YES—Go to step 4.

   NO—Intermittent failure, the system is OK at this time. Go to Troubleshooting Intermittent Failures (see page 24-25). If another DTC is indicated, troubleshoot the DTC. ■
4. Check the No. 31 (7.5 A) fuse in the driver's under-dash fuse/relay box and the No. 4 (30 A) fuse and the No. 8 (30 A) fuse in the passenger's under-dash fuse/relay box.

   Are the fuses OK?

   YES—Go to step 5.

   NO—Replace the faulty fuse. If the problem is still present, short to ground in the driver's under-dash fuse/relay box or passenger's under-dash fuse/relay box circuit. ■
5. Disconnect E-pretensioner subharness 14P connector B from the E-pretensioner unit (see page 24-221).

6. Measure the voltage between E-pretensioner unit connector B (14P) terminal No. 8 and body ground. There should be battery voltage.

E-PRETENSIONER UNIT CONNECTOR B (14P)

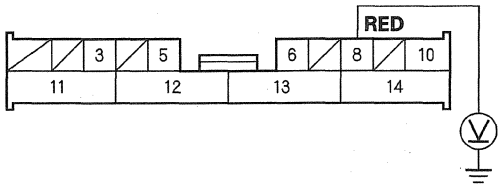

Wire side of female terminals

Is there battery voltage?

YES—Go to step 7.

NO—Open between the No. 31 (7.5 A) fuse in the driver's under-dash fuse/relay box and E-pretensioner unit connector B (14P) terminal No. 8. ■

7. Measure the voltage between E-pretensioner unit connector B (14P) terminal No. 12 and body ground. There should be battery voltage.

E-PRETENSIONER UNIT CONNECTOR B (14P)

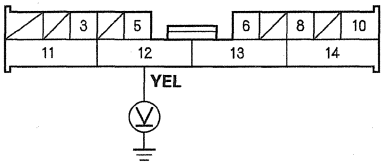

Wire side of female terminals

Is the battery voltage?

YES—Go to step 8.

NO—Open between No. 8 (30 A) fuse in the passenger's under-dash fuse/relay box and E-pretensioner unit connector B (14P) terminal No. 12. ■

8. Disconnect E-pretensioner subharness 5P connector A from the E-pretensioner unit (see page 24-221).

9. Measure the voltage between E-pretensioner unit connector A (5P) terminal No. 2 and body ground. There should be battery voltage.

E-PRETENSIONER UNIT CONNECTOR A (5P)

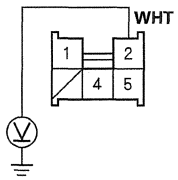

Wire side of female terminals

Is there battery voltage?

YES—Go to step 10.

NO—Open between No. 4 (30 A) fuse in the passenger's under-dash fuse/relay box and E-pretensioner unit connector A (5P) terminal No. 1. ■

(cont'd)

DTC Troubleshooting (cont'd)

10. Turn the ignition switch to LOCK (0).

11. Measure the resistance between E-pretensioner unit connector B (14P) terminal No. 10 and body ground, and between E-pretensioner unit connector B (14P) terminal No. 11 and body ground. There should be less than 1.0 Ω.

E-PRETENSIONER UNIT CONNECTOR B (14P)

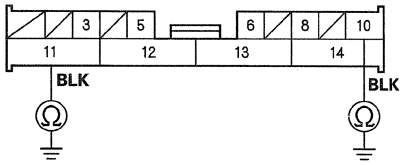

Wire side of female terminals

Are the resistances as specified?

YES—Go to step 12.

NO—Open between E-pretensioner unit connector B (14P) terminal No. 10 and body ground, or between E-pretensioner unit connector B (14P) terminal No. 11 and body ground or poor connection at G653 (see page 22-44). ■

12. Measure the resistance between E-pretensioner unit connector A (5P) terminal No. 5 and body ground. There should be less than 1.0 Ω.

E-PRETENSIONER UNIT CONNECTOR A (5P)

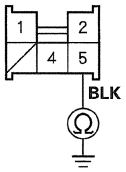

Wire side of female terminals

Is the resistance as specified?

YES—Go to step 13.

NO—Open between E-pretensioner unit connector A (5P) terminal No. 5 and body ground or poor connection at G653 (see page 22-44). ■

13. Disconnect the negative cable from the battery, then wait at least 3 minutes.

14. Disconnect SRS unit connect A (28P) from the SRS unit (see step 10 on page 24-22).

15. Measure the resistance between SRS unit connector A (28P) terminal No. 14 and body ground. There should be an open circuit or at least 1 MΩ.

SRS UNIT CONNECTOR A (28P)

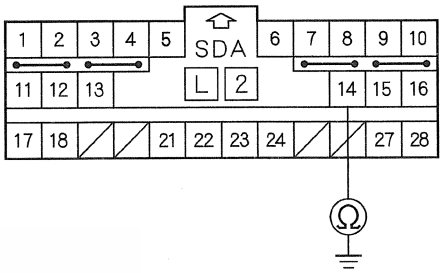

Wire side of female terminals

Is the resistance as specified?

YES—Go to step 16.

NO—Short to ground between SRS unit connector A (28P) terminal No. 14 and E-pretensioner unit connector B (14P) terminal No. 6. ■

16. Measure the resistance between SRS unit connector A (28P) terminal No. 14 and E-pretensioner unit connector B (14P) terminal No. 6. There should be less than 1.0 Ω.

SRS UNIT CONNECTOR A (28P)

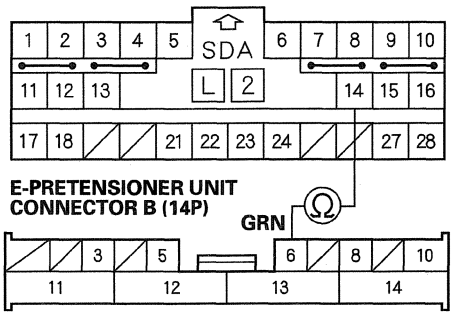

Wire side of female terminals

Is the resistance as specified?

YES—Faulty E-pretensioner unit; replace the E-pretensioner unit (see page 24-221), then clear the DTC. ■

NO—Open between SRS unit connector A (28P) terminal No. 14 and E-pretensioner unit connector B (14P) terminal No. 6. ■

DTC 81-4x, 81-5x ("x" can be 0 thru 9 or A thru F), 81-63, 81-64: Internal the Failure of the ODS Unit

NOTE: Before doing this troubleshooting procedure, review SRS Precautions and Procedures (see page 24-14) and General Troubleshooting Information (see page 24-23).

1. Clear the DTC memory (see page 24-24).
2. Turn the ignition switch to ON (II), and check that the SRS indicator comes on for about 6 seconds and then goes off.

   Does the SRS indicator stay on, and is DTC 81-4x, 81-5x, 81-63, or 81-64 indicated?

   YES—Go to step 3.

   NO—Intermittent failure, the system is OK at this time. Go to Troubleshooting Intermittent Failures (see page 24-25). If another DTC is indicated, troubleshoot the DTC. ■
3. Initialize the ODS unit (see page 24-26).

(cont'd)

DTC Troubleshooting (cont'd)

4. Turn the ignition switch to ON (II), and check that the SRS indicator comes on for about 6 seconds and then goes off.

   Does the SRS indicator go off?

   YES—The system is OK at this time. ■

   NO—Go to step 5.

5. Replace the ODS unit (see page 24-220), then clear the DTC. ■

6. Turn the ignition switch to ON (II), and check that the SRS indicator comes on for about 6 seconds and then goes off.

   Does the SRS indicator go off?

   YES—The system is OK at this time. ■

   NO—Replace the SRS unit (see page 24-215). ■

DTC 81-61: No Signal From the ODS Unit

DTC 81-62: Non-Stipulated Data From the ODS Unit

NOTE: Before doing this troubleshooting procedure, review SRS Precautions and Procedures (see page 24-14), General Troubleshooting Information (see page 24-23), and Battery Terminal Disconnection and Reconnection (see page 22-91).

1. Clear the DTC memory (see page 24-24).

2. Turn the ignition switch to ON (II), then wait for 10 seconds.

3. Read the DTC (see page 24-23).

   Is DTC 81-61 or 81-62 indicated?

   YES—Go to step 4.

   NO—Intermittent failure, the system is OK at this time. Go to Troubleshooting Intermittent Failures (see page 24-25). If another DTC is indicated, troubleshoot the DTC. ■

4. Check the connection between the front passenger's seat wire harness 18P connector (A) and the ODS unit (B).

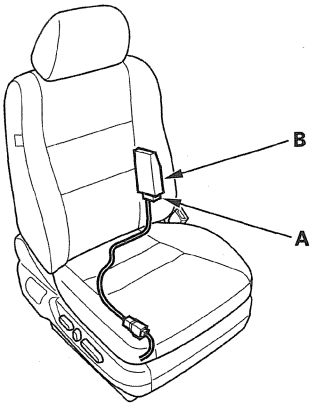

   Is the connection OK?

   YES—Go to step 5.

   NO—Repair the poor connection, then clear the DTC, and retest. If DTC 81-61 or 81-62 is still present, go to step 5.

5. Turn the ignition switch to LOCK (0).

6. Check the No. 10 (7.5A) fuse in the driver's under-dash fuse/relay box.

   Is the fuse OK?

   YES—Go to step 7.

   NO—Replace the fuse, then turn the ignition switch to ON (II). If the fuse blows again, check for a short in the No. 10 (7.5 A) fuse circuit (dashboard wire harness, right side wire harness, or front passenger's wire harness).

7. Disconnect the front passenger's seat wire harness 18P connector (A) from the ODS unit (B).

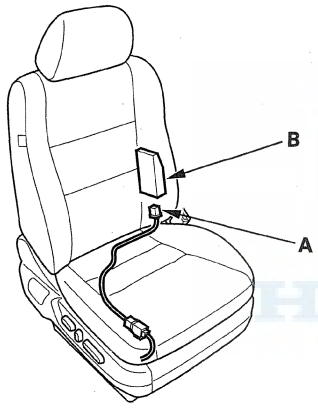

8. Turn the ignition switch to ON (II).

9. Measure the voltage between front passenger's seat wire harness 18P connector terminal No. 1 and body ground. There should be battery voltage.

FRONT PASSENGER'S SEAT WIRE HARNESS 18P CONNECTOR

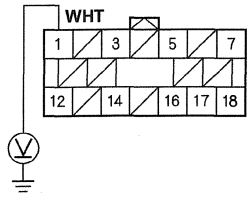

Wire side of female terminals

Is there battery voltage?

YES—Go to step 10.

NO—Open in the dashboard wire harness, the right side wire harness, or the front passenger's seat wire harness; replace the faulty harness, then clear the DTC. ■

10. Turn the ignition switch to LOCK (0).

11. Measure the resistance between front passenger's seat wire harness 18P connector terminal No. 12 and body ground. There should be less than 1.0 Ω.

FRONT PASSENGER'S SEAT WIRE HARNESS 18P CONNECTOR

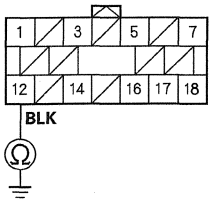

Wire side of female terminals

Is the resistance as specified?

YES—Go to step 12.

NO—Open in the right side wire harness, or the front passenger's seat wire harness, poor connection at the ground (G651) (see page 22-44) or poor connection at the front passenger's seat wire harness 18P connector, and the ODS unit. Check the connection; if the connection is OK, replace the faulty harness, then clear the DTC. ■

(cont'd)

DTC Troubleshooting (cont'd)

12. Disconnect the negative cable from the battery, then wait at least 3 minutes.

13. Disconnect SRS unit connector A (28P) from the SRS unit (see step 10 on page 24-22).

14. Measure the resistance between SRS unit connector A (28P) terminal No. 14 and body ground. There should be an open circuit or at least 1 MΩ.

SRS UNIT CONNECTOR A (28P)

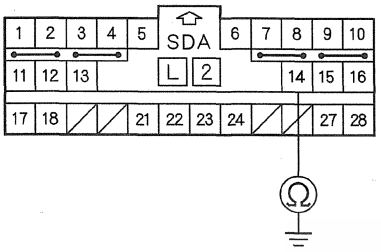

Wire side of female terminals

Is the resistance as specified?

YES—Go to step 15.

NO—Short in the dashboard wire harness, left side wire harness, right side wire harness, or front passenger's seat wire harness; replace the faulty harness, then clear the DTC.■

15. Reconnect the negative cable to the battery.

16. Turn the ignition switch to ON (II).

17. Measure the voltage between SRS unit connector A (28P) terminal No. 14 and body ground. There should be less than 0.2 V.

SRS UNIT CONNECTOR A (28P)

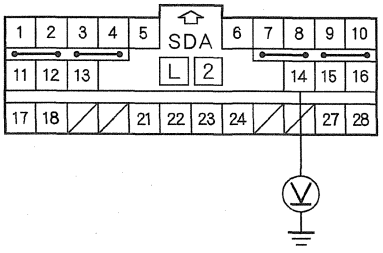

Wire side of female terminals

Is the voltage as specified?

YES—Go to step 18.

NO—Short to power in the dashboard wire harness, then clear the DTC.■

18. Measure the resistance between SRS unit connector A (28P) terminal No. 14 and front passenger's seat wire harness 18P connector terminal No. 7. There should be less than 1.0 Ω.

FRONT PASSENGER'S SEAT WIRE HARNESS 18P CONNECTOR
Wire side of female terminals

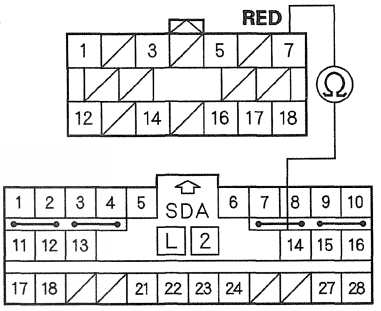

SRS UNIT CONNECTOR A (28P)
Wire side of female terminals

Is the resistance as specified?

YES—Faulty ODS unit or SRS unit; replace the ODS unit (see page 24-220), then clear the DTC. If the problem is still present, replace the SRS unit (see page 24-215).■

NO—Open in the dashboard wire harness, the left side wire harness, the right side wire harness, or the front passenger's seat wire harness; replace the faulty harness, then clear the DTC.■

DTC 81-71, 81-78: ODS Unit Not Calibrated

NOTE: Before doing this troubleshooting procedure, review SRS Precautions and Procedures (see page 24-14) and General Troubleshooting Information (see page 24-23).

1. Clear the DTC memory (see page 24-24).
2. Turn the ignition switch to ON (II), then wait for 10 seconds.
3. Read the DTC (see page 24-23).

   Is DTC 81-71 or 81-78 indicated?

   YES—Go to step 4.

   NO—Intermittent failure, the system is OK at this time. Go to Troubleshooting Intermittent Failures (see page 24-25). If another DTC is indicated, troubleshoot the DTC. ■
4. Calibrate the ODS unit (see page 24-27).
5. Turn the ignition switch to LOCK (0), then wait for 10 seconds.
6. Turn the ignition switch to ON (II), then wait for 10 seconds.
7. Read the DTC (see page 24-23).

   Is DTC 81-71 or 81-78 indicated?

   YES—Faulty ODS unit, replace the ODS unit (see page 24-220), then clear the DTC. If the DTC is still present, replace the SRS unit (see page 24-215). ■

   NO—Intermittent failure, the system is OK at this time. Go to Troubleshooting Intermittent Failures (see page 24-25). If another DTC is indicated, troubleshoot the DTC. ■

DTC 81-79: Front Passenger's Weight Sensors Initial Check Failure

NOTE: Before doing this troubleshooting procedure, review SRS Precautions and Procedures (see page 24-14) and General Troubleshooting Information (see page 24-23).

1. Clear the DTC memory (see page 24-24).
2. Turn the ignition switch to ON (II), and check that the SRS indicator comes on for about 6 seconds and then goes off.

   Does the SRS indicator stay on, and is DTC 81-79 indicated?

   YES—Go to step 3.

   NO—Intermittent failure, the system is OK at this time. Go to Troubleshooting Intermittent Failures (see page 24-25). If another DTC is indicated, troubleshoot the DTC. ■
3. Turn the ignition switch to LOCK (0).
4. Make sure nothing is on the front passenger's seat.
5. Turn the ignition switch to ON (II), and check that the SRS indicator comes on for about 6 seconds and then goes off.

   Does the SRS indicator go off?

   YES—Intermittent failure, the system is OK at this time. Go to Troubleshooting Intermittent Failures (see page 24-25). If another DTC is indicated, troubleshoot the DTC. ■

   NO—Loosen the front passenger's seat mounting bolts (see step 4 on page 20-115), and shake the seat in all directions. Tighten the seat mounting bolts to the specified torque, then calibrate the ODS unit (see page 24-27). If the problem is still present, replace the front passenger's weight sensor assembly (see page 24-219), then clear the DTC, and if the problem is still present, replace the ODS unit (see page 24-220), then clear the DTC. ■

DTC Troubleshooting (cont'd)

DTC 82-1x ("x" can be 0 thru 9 or A thru F): No Signal From the Inner Side Front Passenger's Weight Sensor

NOTE: Before doing this troubleshooting procedure, review SRS Precautions and Procedures (see page 24-14) and General Troubleshooting Information (see page 24-23).

1. Check the seat weight sensor connectors for loose or poor connections.
2. Clear the DTC memory (see page 24-24).
3. Turn the ignition switch to ON (II), then wait for 10 seconds.
4. Read the DTC (see page 24-23).

   Is DTC 82-1x indicated?

   YES—Replace the inner side front passenger's weight sensor (see page 24-219), then clear the DTC. ■

   NO—Intermittent failure, the system is OK at this time. Go to Troubleshooting Intermittent Failures (see page 24-25). If another DTC is indicated, troubleshoot the DTC. ■

DTC 83-2x ("x" can be 0 thru 9 or A thru F): No Signal From the Outer Side Front Passenger's Weight Sensor

NOTE: Before doing this troubleshooting procedure, review SRS Precautions and Procedures (see page 24-14) and General Troubleshooting Information (see page 24-23).

1. Check the seat weight sensor connectors for loose or poor connections.
2. Clear the DTC memory (see page 24-24).
3. Turn the ignition switch to ON (II), then wait for 10 seconds.
4. Read the DTC (see page 24-23).

   Is DTC 83-2x indicated?

   YES—Replace the outer side front passenger's weight sensor (see page 24-219), then clear the DTC. ■

   NO—Intermittent failure, the system is OK at this time. Go to Troubleshooting Intermittent Failures (see page 24-25). If another DTC is indicated, troubleshoot the DTC. ■

DTC 85-4x, 85-5x ("x" can be 0 thru 9 or A thru F), 85-63, 85-64: Internal Failure of the ODS Unit

NOTE: Before doing this troubleshooting procedure, review SRS Precautions and Procedures (see page 24-14) and General Troubleshooting Information (see page 24-23).

1. Clear the DTC memory (see page 24-24).
2. Turn the ignition switch to ON (II), and check that the SRS indicator comes on for about 6 seconds and then goes off.

   Does the SRS indicator go off?

   YES—Intermittent failure, the system is OK at this time. Go to Troubleshooting Intermittent Failures (see page 24-25). ■

   NO—Go to step 3.
3. Initialize the ODS unit (see page 24-26).
4. Turn the ignition switch to ON (II), and check that the SRS indicator comes on for about 6 seconds and then goes off.

   Does the SRS indicator go off?

   YES—The system is OK. ■

   NO—Replace the ODS unit (see page 24-220), then clear the DTC, and retest. If the DTC is still present, replace the SRS unit (see page 24-215). ■

DTC 85-71, 85-78: ODS Unit Not Initialized

NOTE: Before doing this troubleshooting procedure, review SRS Precautions and Procedures (see page 24-14) and General Troubleshooting Information (see page 24-23).

1. Clear the DTC memory (see page 24-24).
2. Turn the ignition switch to ON (II), then wait for 10 seconds.
3. Read the DTC (see page 24-23).

   Is DTC 85-71 or 85-78 indicated?

   YES—Go to step 4.

   NO—Intermittent failure, the system is OK at this time. Go to Troubleshooting Intermittent Failures (see page 24-25). If another DTC is indicated, troubleshoot the DTC. ■
4. Initialize the ODS unit (see page 24-26).
5. Turn the ignition switch to LOCK (0), then wait for 10 seconds.
6. Turn the ignition switch to ON (II), then wait for 10 seconds.
7. Read the DTC (see page 24-23).

   Is DTC 85-71 or 85-78 indicated?

   YES—Faulty ODS unit; replace the ODS unit (see page 24-220), then clear the DTC. If the DTC is still present, replace the SRS unit (see page 24-215). ■

   NO—This system is OK. ■

DTC Troubleshooting (cont'd)

DTC 85-61: No Signal From the ODS Unit

DTC 85-62: Non-Stipulated Data From the ODS Unit

NOTE: Before doing this troubleshooting procedure, review SRS Precautions and Procedures (see page 24-14), General Troubleshooting Information (see page 24-23), and Battery Terminal Disconnection and Reconnection (see page 22-91).

1. Clear the DTC memory (see page 24-24).
2. Read the DTC (see page 24-23).

   Is DTC 85-61 or 85-62 indicated?

   YES—Go to step 3.

   NO—Intermittent failure, the system is OK at this time. Go to Troubleshooting Intermittent Failures (see page 24-25). If another DTC is indicated, troubleshoot the DTC. ■
3. Check the No. 10 (7.5 A) fuse in the driver's under-dash fuse/relay box.

   Is the fuse OK?

   YES—Go to step 4.

   NO—Replace the fuse, then turn the ignition switch to ON (II). If the fuse blows again, check for a short in the No. 10 (7.5 A) fuse circuit (dashboard wire harness, right side wire harness, or front passenger's seat wire harness).
4. Disconnect the front passenger's seat wire harness 18P connector (A) from the ODS unit (B).

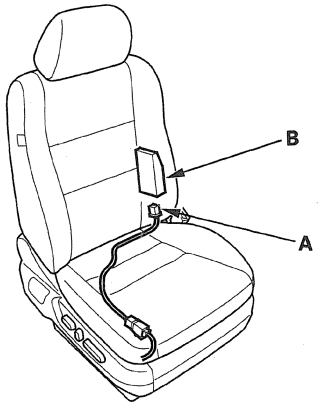

5. Turn the ignition switch to ON (II).
6. Measure the voltage between front passenger's seat wire harness 18P connector terminal No. 1 and body ground. There should be battery voltage.

FRONT PASSENGER'S SEAT WIRE HARNESS 18P CONNECTOR

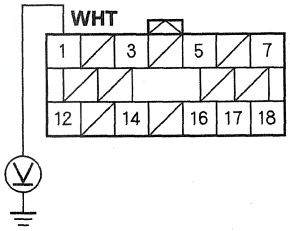

Wire side of female terminals

Is there battery voltage?

YES—Go to step 7.

NO—Open between No. 10 (7.5 A) fuse in the driver's under-dash fuse/relay box and front passenger's seat wire harness 18P connector terminal No. 1 (dashboard wire harness, right side wire harness, or front passenger's seat wire harness); replace the faulty harness, then clear the DTC. ■

7. Turn the ignition switch to LOCK (0).

8. Measure the resistance between front passenger's seat wire harness 18P connector terminal No. 12 and body ground. There should be less than 1.0 Ω

FRONT PASSENGER'S SEAT WIRE HARNESS 18P CONNECTOR

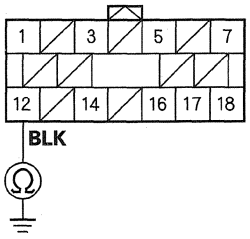

Wire side of female terminals

Is resistance as specified?

YES—Go to step 9.

NO—Open between front passenger's seat wire harness 18P connector terminal No. 12 and body ground (G651) or poor connection at G651 (see page 22-44). ■

9. Disconnect the negative cable from the battery, then wait at least 3 minutes.

10. Disconnect SRS unit connector A (28P) from the SRS unit (see step 10 on page 24-22).

11. Measure the resistance between SRS unit connector A (28P) terminal No. 14 and body ground. There should be an open circuit or at least 1 MΩ.

SRS UNIT CONNECTOR A (28P)

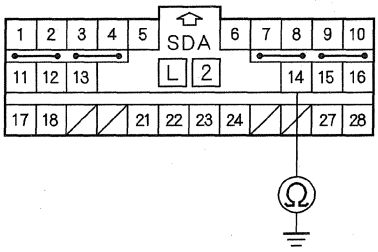

Wire side of female terminals

Is the resistance as specified?

YES—Go to step 12.

NO—Short to ground between SRS unit connector A (28P) terminal No. 14 and front passenger's seat wire harness 18P connector terminal No. 7 (dashboard wire harness, left side wire harness, right side wire harness, or front passenger's seat wire harness); replace the faulty harness, then clear the DTC. ■

(cont'd)

DTC Troubleshooting (cont'd)

12. Measure the resistance between SRS unit connector A (28P) terminal No. 14 and front passenger's seat wire harness 18P connector terminal No. 7. There should be less than 1.0 Ω.

FRONT PASSENGER'S SEAT WIRE HARNESS 18P CONNECTOR
Wire side of female terminals

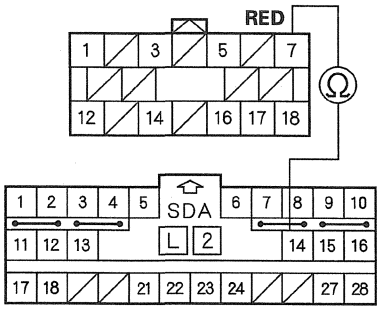

SRS UNIT CONNECTOR A (28P)
Wire side of female terminals

Is the resistance as specified?

YES—Go to step 13.

NO—Open between SRS unit connector A (28P) terminal No. 14 and front passenger's seat wire harness 18P connector terminal No. 7 (dashboard wire harness, left side wire harness, right side wire harness, or front passenger's seat wire harness); replace the faulty harness, then clear the DTC.■

13. Reconnect the negative cable to the battery.

14. Turn the ignition switch to ON (II).

15. Measure the voltage between SRS unit connector A (28P) terminal No. 14 and body ground. There should be less than 0.2 V.

SRS UNIT CONNECTOR A (28P)

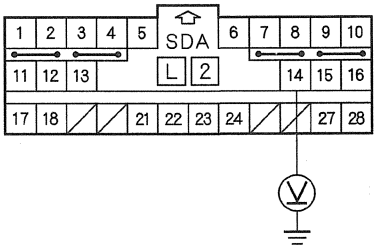

Wire side of female terminals

Is there battery voltage as specified?

YES—Go to step 16.

NO—Short to power between SRS unit connector A (28P) terminal No. 14 and front passenger's seat wire harness 18P connector terminal No. 7 (dashboard wire harness, left side wire harness, right side wire harness, or front passenger's seat wire harness); replace the faulty harness, then clear the DTC.■

16. Replace the ODS unit (see page 24-220).

17. Clear the DTC (see page 24-24).

18. Read the DTC (see page 24-23).

Is DTC 85-61 or 85-62 indicated?

YES—Replace the SRS unit (see page 24-215).■

NO—This system is OK.■

DTC 85-79: OPDS Initial Check Failure

NOTE: Before doing this troubleshooting procedure, review SRS Precautions and Procedures (see page 24-14) and General Troubleshooting Information (see page 24-23).

1. Clear the DTC memory (see page 24-24).
2. Turn the ignition switch to ON (II), and check that the SRS indicator comes on for about 6 seconds and then goes off.

   Does the SRS indicator go off?

   YES—Intermittent failure, the system is OK at this time. Go to Troubleshooting Intermittent Failures (see page 24-25). ■

   NO—Go to step 3.
3. Turn the ignition switch to LOCK (0).
4. Make sure nothing is on the front passenger's seat.
5. Clear the DTC memory (see page 24-24).
6. Turn the ignition switch to ON (II), and check that the SRS indicator comes on for about 6 seconds and then goes off.

   Does the SRS indicator go off?

   YES—Intermittent failure, the system is OK at this time. Go to Troubleshooting Intermittent Failures (see page 24-25). ■

   NO—Go to step 7.
7. Initialize the ODS unit (see page 24-26).
8. Turn the ignition switch to ON (II), and check that the SRS indicator comes on for about 6 seconds and then goes off.

   Does the SRS indicator go off?

   YES—The system is OK. ■

   NO—Faulty ODS unit; replace the ODS unit (see page 24-220), then clear the DTC, and retest. If the DTC is still present, replace the OPDS sensor/seat-back (see page 20-128), then clear the DTC. ■

DTC Troubleshooting (cont'd)

DTC 86-1x ("x" can be 0 thru 9 or A thru F): Faulty OPDS Seat-Back Sensor

DTC 86-2x ("x" can be 0 thru 9 or A thru F): Faulty OPDS Seat Support Sensor

NOTE: Before doing this troubleshooting procedure, review SRS Precautions and Procedures (see page 24-14) and General Troubleshooting Information (see page 24-23).

1. Clear the DTC memory (see page 24-24).
2. Turn the ignition switch to ON (II), then wait for 10 seconds.
3. Read the DTC (see page 24-23).

   Is DTC 86-1x or 86-2x indicated?

   YES—Go to step 4.

   NO—Intermittent failure, the system is OK at this time. Go to Troubleshooting Intermittent Failures (see page 24-25). If another DTC is indicated, troubleshoot the DTC. ■
4. Check the connection front passenger's seat wire harness 18P connector (A) and the sensor connectors (B).

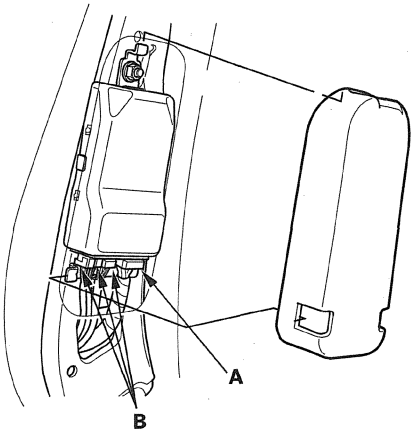

   Is the connection OK?

   YES—Go to step 5.

   NO—Repair the poor connection, and clear the DTC, then clear the DTC. ■
5. Replace the front passenger's seat-back cover/pad (see page 20-128).
6. Initialize the ODS unit (see page 24-26).
7. Clear the DTC memory (see page 24-24).
8. Read the DTC (see page 24-23).

   Is DTC 86-1x or 86-2x indicated?

   YES—Faulty ODS unit; replace the ODS unit (see page 24-220), then clear the DTC. If the problem is still present, replace the SRS unit (see page 24-215). ■

   NO—The system is OK. ■

DTC 87-3x ("x" can be 0 thru 9 or A thru F): Side Airbag Cutoff Indicator Stays ON/OFF

NOTE: Before doing this troubleshooting procedure, review SRS Precautions and Procedures (see page 24-14) and General Troubleshooting Information (see page 24-23).

1. Clear the DTC memory (see page 24-24).
2. Turn the ignition switch to ON (II), and check that the SRS indicator comes on for about 6 seconds and then goes off.

   Does the SRS indicator stay on?

   YES—Go to step 3.

   NO—Intermittent failure, the system is OK at this time. Go to Troubleshooting Intermittent Failures (see page 24-25). If another DTC is indicated, troubleshoot the DTC. ■
3. Turn the ignition switch to LOCK (0). Make sure nothing is on the front passenger's seat.
4. Disconnect the front passenger's seat wire harness 18P connector (A) from the ODS unit (B).

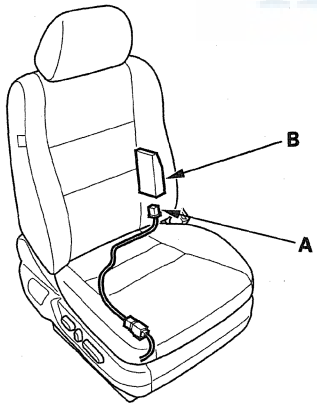

5. Turn the ignition switch to ON (II).
6. Measure the voltage between front passenger's seat wire harness 18P connector terminal No. 18 and body ground. There should be battery voltage.

FRONT PASSENGER'S SEAT WIRE HARNESS 18P CONNECTOR

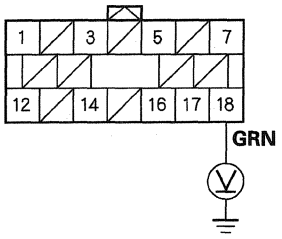

Wire side of female terminals

Is there battery voltage?

YES—Faulty ODS unit; replace the ODS unit (see page 24-220). ■

NO—Go to step 7.

7. Turn the ignition switch to LOCK (0).
8. Remove the gauge control module (see page 22-419). Disconnect gauge control module connector A (20P) from the gauge control module.

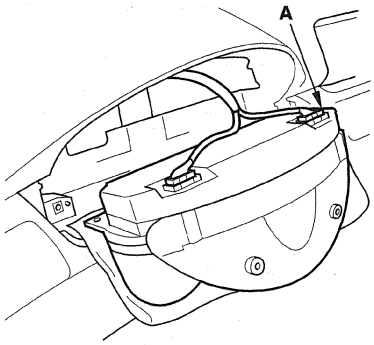

(cont'd)

DTC Troubleshooting (cont'd)

9. Measure the resistance between front passenger's seat wire harness 18P connector terminal No. 18 and body ground. There should be an open circuit or at least 1 MΩ.

FRONT PASSENGER'S SEAT WIRE HARNESS 18P CONNECTOR

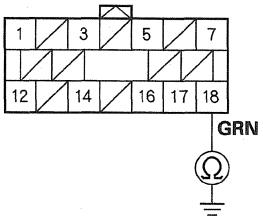

Wire side of female terminals

Is the resistance as specified?

YES—Go to step 10.

NO—Short to ground in the front passenger's seat wire harness, left side wire harness, right side wire harness, or dashboard wire harness; replace the faulty harness, then clear the DTC.■

10. Measure the resistance between front passenger's seat wire harness 18P connector terminal No. 18 and gauge control module connector A (20P) terminal No. 11. There should be less than 1.0 Ω.

GAUGE CONTROL MODULE CONNECTOR A (20P)
Wire side of female terminals

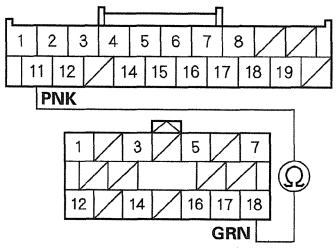

FRONT PASSENGER'S SEAT WIRE HARNESS 18P CONNECTOR
Wire side of female terminals

Is the resistance as specified?

YES—Intermittent failure, the system is OK at this time. Go to Troubleshooting Intermittent Failures (see page 24-25).■

NO—Open in the front passenger's seat wire harness, the left side wire harness, the right side wire harness, or the dashboard wire harness; replace the faulty harness, then clear the DTC.■

DTC 91-1x ("x" can be 0 thru 9 or A thru F): Internal Failure of the SRS Unit

NOTE:
- Before troubleshooting any of these DTCs, check the battery/system voltage. If the voltage is low, repair the charging system before troubleshooting the SRS system. If the battery/system voltage is now OK, ask the client if the battery ever went dead. A dead battery may trigger one of these DTCs.
- Before doing this troubleshooting procedure, review SRS Precautions and Procedures (see page 24-14) and General Troubleshooting Information (see page 24-23).

1. Clear the DTC memory (see page 24-24).

2. Turn the ignition switch to ON (II), and check that the SRS indicator comes on for about 6 seconds and then goes off.

Does the SRS indicator stay on, and is DTC 91-1x indicated?

YES—Replace the SRS unit (see page 24-215).■

NO—Intermittent failure, the system is OK at this time. Go to Troubleshooting Intermittent Failures (see page 24-25). If another DTC is indicated, troubleshoot the DTC.■

DTC 91-2x ("x" can be 0 thru 9 or A thru F): Short to Ground in the SRS Indicator Circuit

NOTE: Before doing this troubleshooting procedure, review SRS Precautions and Procedures (see page 24-14) and General Troubleshooting Information (see page 24-23).

1. Clear the DTC memory (see page 24-24).
2. Turn the ignition switch to ON (II), and check that the SRS indicator comes on for about 6 seconds and then goes off.

   Does the SRS indicator stay on, and is DTC 91-2x indicated?

   YES—Go to step 3.

   NO—Intermittent failure, the system is OK at this time. Go to Troubleshooting Intermittent Failures (see page 24-25). If another DTC is indicated, troubleshoot the DTC. ■
3. Turn the ignition switch to LOCK (0).
4. Disconnect the negative cable from the battery, then wait at least 3 minutes.
5. Disconnect SRS unit connector A (28P) from the SRS unit (see step 10 on page 24-22).
6. Remove the gauge control module (see page 22-419). Disconnect gauge control module connector A (20P) from the gauge control module.

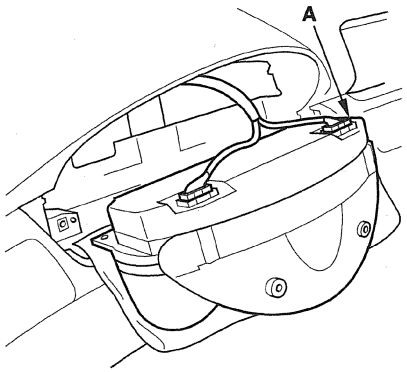

7. Measure the resistance between SRS unit connector A (28P) terminal No. 11 and body ground. There should be an open circuit or at least 1 MΩ.

SRS UNIT CONNECTOR A (28P)

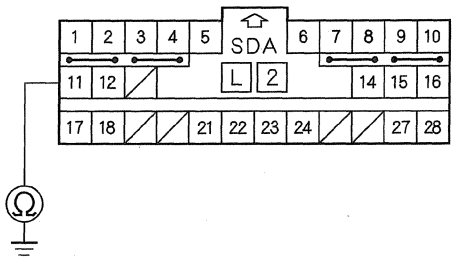

Wire side of female terminals

Is the resistance as specified?

YES—Go to step 8.

NO—Short to ground in the dashboard wire harness; replace the dashboard wire harness, then clear the DTC. ■

(cont'd)

DTC Troubleshooting (cont'd)

8. Reconnect gauge control module connector A (20P).

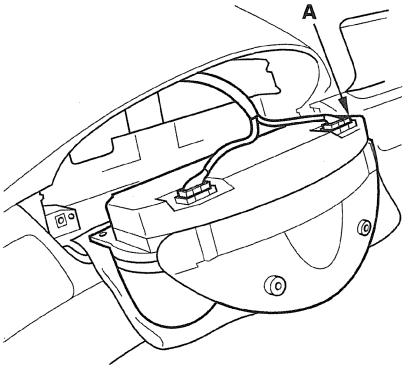

9. Turn the ignition switch to ON (II).

10. Install a jumper wire between gauge control module connector A (20P) terminal No. 12 and gauge control module connector B (28P) terminal No. 1. The SRS indicator should go off.

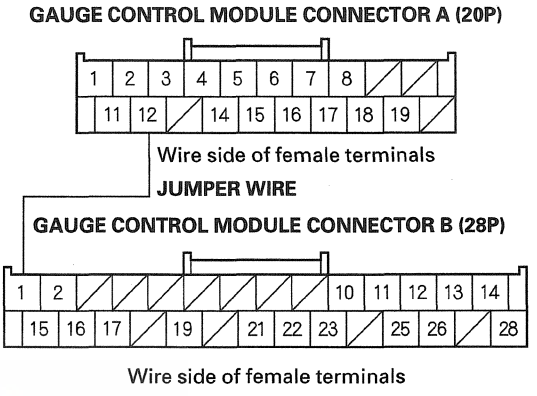

Does the SRS indicator go off?

YES—Faulty SRS unit; replace the SRS unit (see page 24-215). ■

NO—Short to ground in the SRS indicator circuit of the gauge control module; replace the gauge control module (see page 22-419), then clear the DTC. ■

DTC 92-1x ("x" can be 0 thru 9 or A thru F): Short to Power in the Passenger's Airbag Cutoff Indicator

NOTE: Before doing this troubleshooting procedure, review SRS Precautions and Procedures (see page 24-14), General Troubleshooting Information (see page 24-23), and Battery Terminal Disconnection and Reconnection (see page 22-91).

1. Clear the DTC memory (see page 24-24).
2. Turn the ignition switch to ON (II), then wait for 10 seconds.
3. Read the DTC (see page 24-23).

   Is DTC 92-1x indicated?

   YES—Go to step 4.

   NO—Intermittent failure, the system is OK at this time. Go to Troubleshooting Intermittent Failures (see page 24-25). If another DTC is indicated, troubleshoot the DTC. ■
4. Disconnect the passenger's airbag cutoff indicator 6P connector (see page 24-224).
5. Turn the ignition switch to LOCK (0).
6. Disconnect the negative cable from the battery, then wait at least 3 minutes.
7. Disconnect SRS unit connector A (28P) from the SRS unit (see step 10 on page 24-22).
8. Reconnect the negative cable to the battery.
9. Turn the ignition switch to ON (II).
10. Measure the voltage between SRS unit connector A (28P) terminal No. 12 and body ground. There should be less than 0.2 V.

SRS UNIT CONNECTOR A (28P)

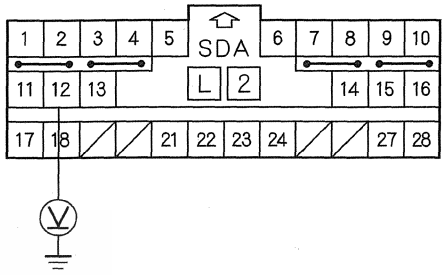

Wire side of female terminals

Is the voltage as specified?

YES—Faulty SRS unit or passenger's airbag cutoff indicator; replace the passenger's airbag cutoff indicator. If the problem is still present, replace the SRS unit (see page 24-215). ■

NO—Short to power in the dashboard wire harness; replace the dashboard wire harness, then clear the DTC. ■

DTC Troubleshooting (cont'd)

DTC 92-2x ("x" can be 0 thru 9 or A thru F): Open or Short to Ground in the Passenger's Airbag Cutoff Indicator

NOTE: Before doing this troubleshooting procedure, review SRS Precautions and Procedures (see page 24-14), General Troubleshooting Information (see page 24-23), and Battery Terminal Disconnection and Reconnection (see page 22-91).

1. Clear the DTC memory (see page 24-24).
2. Turn the ignition switch to ON (II), then wait for 10 seconds.
3. Read the DTC (see page 24-23).

   Is DTC 92-21 indicated?

   YES—Go to step 4.

   NO—Intermittent failure, the system is OK at this time. Go to Troubleshooting Intermittent Failures (see page 24-25). If another DTC is indicated, troubleshoot the DTC.■
4. Disconnect the passenger's airbag cutoff indicator 6P connector (see page 24-224).
5. Turn the ignition switch to LOCK (0).
6. Disconnect the negative cable from the battery, then wait at least 3 minutes.
7. Disconnect SRS unit connector A (28P) from the SRS unit (see step 10 on page 24-22).

8. Measure the resistance between passenger's airbag cutoff indicator 6P connector terminal No. 2 and SRS unit connector A (28P) terminal No. 12. There should be less than 1.0 Ω.

SRS UNIT CONNECTOR A (28P)

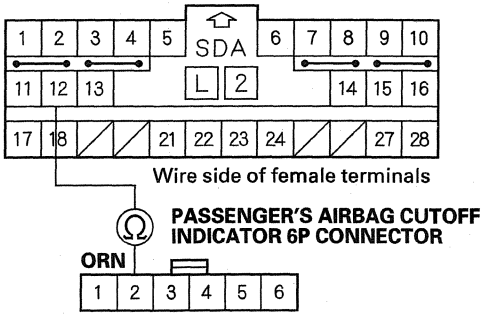

Wire side of female terminals

Is the resistance as specified?

YES—Go to step 9.

NO—Open in the dashboard wire harness; replace the dashboard wire harness, then clear the DTC. ■

9. Measure the resistance between SRS unit connector A (28P) terminal No. 12 and body ground. There should be an open circuit or at least 1 MΩ.

SRS UNIT CONNECTOR A (28P)

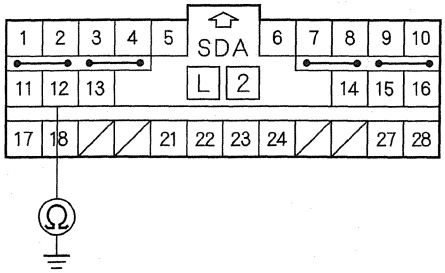

Wire side of female terminals

Is the resistance as specified?

YES—Faulty passenger's airbag cutoff indicator; replace the passenger's airbag cutoff indicator (see page 24-224), then clear the DTC. If the problem is still present, replace the SRS unit (see page 24-215). ■

NO—Short to ground in the dashboard wire harness; replace the dashboard wire harness, then clear the DTC. ■

DTC Troubleshooting (cont'd)

DTC A1-1x ("x" can be 0 thru 9 or A thru F): Faulty Power Supply (VA line)

NOTE: Before doing this troubleshooting procedure, review SRS Precautions and Procedures (see page 24-14), General Troubleshooting Information (see page 24-23), and Battery Terminal Disconnection and Reconnection (see page 22-91).

1. Clear the DTC memory (see page 24-24).
2. Turn the ignition switch to ON (II), then wait for 10 seconds.
3. Read the DTC (see page 24-23).

   Is DTC A1-1x indicated?

   YES—Go to step 4.

   NO—Intermittent failure, the system is OK at this time. Go to Troubleshooting Intermittent Failures (see page 24-25). If another DTC is indicated, troubleshoot the DTC. ■
4. Turn the ignition switch to LOCK (0).
5. Check the No. 10 (7.5 A) fuse in the driver's under-dash fuse/relay box.

   Is the fuse OK?

   YES—Go to step 6.

   NO—Replace the fuse, then turn the ignition switch to ON (II). If the fuse blows again, check for a short in the No. 10 (7.5 A) fuse circuit (dashboard wire harness). ■
6. Turn the ignition switch to LOCK (0).
7. Disconnect the negative cable from the battery, then wait at least 3 minutes.
8. Disconnect SRS unit connector A (28P) from the SRS unit (see step 10 on page 24-22).
9. Reconnect the negative cable to the battery.
10. Turn the ignition switch to ON (II).
11. Measure the voltage between SRS unit connector A (28P) terminal No. 17 and body ground. There should be battery voltage.

SRS UNIT CONNECTOR A (28P)

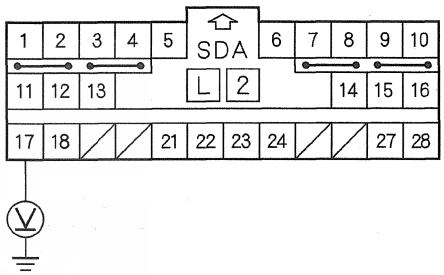

Wire side of female terminals

Is the voltage as specified?

YES—Faulty SRS unit or poor connection at SRS unit connector A (28P) and the SRS unit; check the connection. If the connection is OK, replace the SRS unit (see page 24-215). ■

NO—Open in the dashboard wire harness; replace the dashboard wire harness, then clear the DTC. ■

DTC A2-1x ("x" can be 0 thru 9 or A thru F): Faulty Power Supply (VB line)

NOTE: Before doing this troubleshooting procedure, review SRS Precautions and Procedures (see page 24-14), General Troubleshooting Information (see page 24-23), and Battery Terminal Disconnection and Reconnection (see page 22-91).

1. Clear the DTC memory (see page 24-24).
2. Turn the ignition switch to ON (II), then wait for 10 seconds.
3. Read the DTC (see page 24-23).

   Is DTC A2-1x indicated?

   YES—Go to step 4.

   NO—Intermittent failure, the system is OK at this time. Go to Troubleshooting Intermittent Failures (see page 24-25). If another DTC is indicated, troubleshoot the DTC. ■
4. Turn the ignition switch to LOCK (0).
5. Check the No. 22 (10 A) fuse in the driver's under-dash fuse/relay box.

   Is the fuse OK?

   YES—Go to step 6.

   NO—Replace the fuse, then turn the ignition switch to ON (II). If the fuse blows again, check for a Short to ground in the dashboard wire harness or in the driver's under-dash fuse/relay box No. 22 (10 A) fuse circuit; replace the dashboard wire harness, then clear the DTC. If the problem is still there, replace the driver's under-dash fuse/relay box, then clear the DTC. ■
6. Turn the ignition switch to LOCK (0).
7. Disconnect the negative cable from the battery, then wait at least 3 minutes.
8. Disconnect SRS unit connector A (28P) from the SRS unit (see step 10 on page 24-22).
9. Reconnect the negative cable to the battery.
10. Turn the ignition switch to ON (II).
11. Measure the voltage between SRS unit connector A (28P) terminal No. 18 and body ground. There should be battery voltage.

SRS UNIT CONNECTOR A (28P)

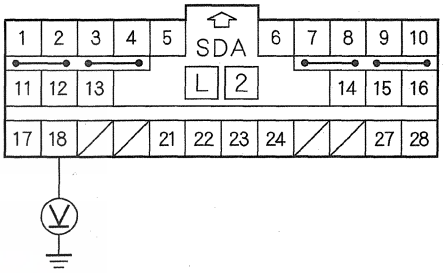

Wire side of female terminals

Is the voltage as specified?

YES—Faulty SRS unit or poor connection at SRS unit connector A (28P) and the SRS unit; check the connection. If the connection is OK, replace the SRS unit (see page 24-215). ■

NO—Open in the dashboard wire harness; replace the dashboard wire harness, then clear the DTC. ■

DTC Troubleshooting (cont'd)

DTC B2-1x ("x" can be 0 thru 9 or A thru F): No Signal from the Rear Safing Sensor

Special Tools Required
- SRS inflator simulator 07SAZ-TB4011A
- SRS simulator lead H 07YAZ-S3AA100

NOTE: Before doing this troubleshooting procedure, review SRS Precautions and Procedures (see page 24-14), General Troubleshooting Information (see page 24-23), and Battery Terminal Disconnection and Reconnection (see page 22-91).

1. Clear the DTC memory (see page 24-24).
2. Turn the ignition switch to ON (II), and check that the SRS indicator comes on for about 6 seconds and then goes off.

   Does the SRS indicator stay on, and is DTC B2-1x indicated?

   YES—Go to step 3.

   NO—Intermittent failure, the system is OK at this time. Go to Troubleshooting Intermittent Failures (see page 24-25). If another DTC is indicated, troubleshoot the DTC. ■
3. Turn the ignition switch to LOCK (0).
4. Disconnect the negative cable from the battery, then wait at least 3 minutes.
5. Check the connection between the floor wire harness 2P connector and rear safing sensor (see page 24-218).

   Is the connection OK?

   YES—Go to step 6.

   NO—Repair the poor connection, then clear the DTC, and retest.
6. Disconnect SRS unit connector C (28P) from the SRS unit (see step 10 on page 24-22).
7. Disconnect the left side wire harness 2P connector (A) from the rear safing sensor.

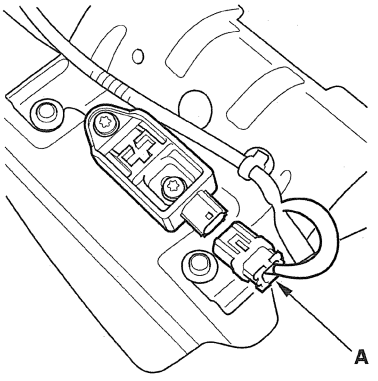

8. Measure the resistance between SRS unit connector C (28P) terminals No. 5 and No. 6. There should be an open circuit or at least 1 MΩ.

SRS UNIT CONNECTOR C (28P)

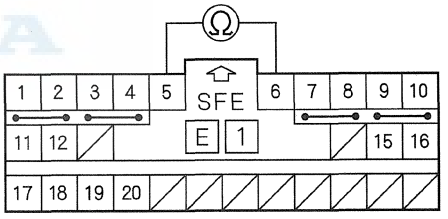

Wire side of female terminals

Is the resistance as specified?

YES—Go to step 9.

NO—Short to another wire in the left side wire harness or the right side wire harness; replace the faulty harness, then clear the DTC. ■

9. Measure the resistance between SRS unit connector C (28P) terminal No. 5 and body ground, and between terminal No. 6 and body ground. There should be an open circuit or at least 1 MΩ.

SRS UNIT CONNECTOR C (28P)

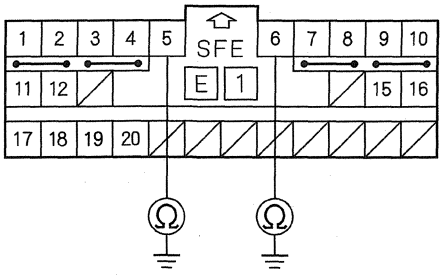

Wire side of female terminals

Is the resistance as specified?

YES—Go to step 10.

NO—Short to ground in the left side wire harness or the right side wire harness; replace the faulty harness, then clear the DTC. ■

10. Reconnect the negative cable to the battery.

11. Turn the ignition switch to ON (II).

12. Measure the voltage between SRS unit connector C (28P) terminal No. 5 and body ground, and between terminal No. 6 and body ground. There should be less than 0.2 V.

SRS UNIT CONNECTOR C (28P)

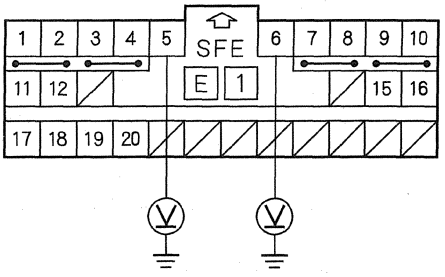

Wire side of female terminals

Is the voltage as specified?

YES—Go to step 13.

NO—Short to power in the left side wire harness or the right side wire harness; replace the faulty harness, then clear the DTC. ■

13. Turn the ignition switch to LOCK (0).

14. Connect the SRS inflator simulator (jumper connector) and simulator lead H to the left side wire harness 2P connector (A).

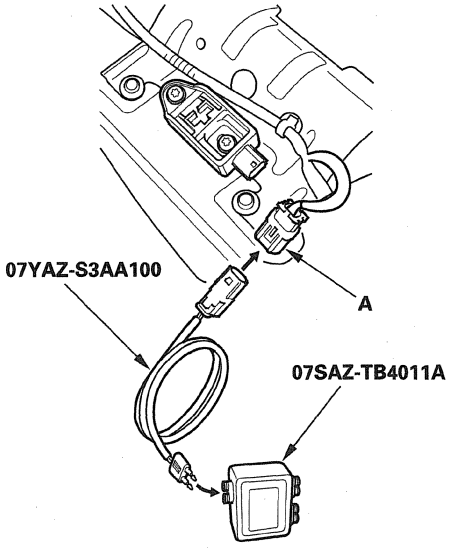

(cont'd)

DTC Troubleshooting (cont'd)

15. Measure the resistance between SRS unit connector C (28P) terminals No. 5 and No. 6. There should be less than 1.0 Ω.

SRS UNIT CONNECTOR C (28P)

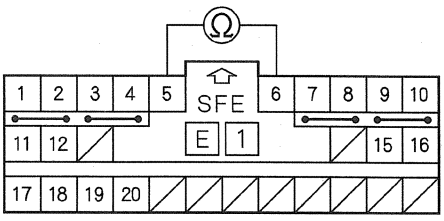

Wire side of female terminals

Is the resistance as specified?

YES—Faulty rear safing sensor or SRS unit; replace the rear safing sensor (see page 24-218), then clear the DTC. If the problem is still present, replace the SRS unit (see page 24-215). ■

NO—Open in the left side wire harness or the right side wire harness; replace the faulty harness, then clear the DTC. ■

DTC B2-Cx ("x" can be 0 thru 9 or A thru F): Faulty Power Supply to the Rear Safing Sensor

NOTE: Before doing this troubleshooting procedure, review SRS Precautions and Procedures (see page 24-14), General Troubleshooting Information (see page 24-23), and Battery Terminal Disconnection and Reconnection (see page 22-91).

1. Clear the DTC memory (see page 24-24).
2. Turn the ignition switch to ON (II), and check that the SRS indicator comes on for about 6 seconds and then goes off.

   Does the SRS indicator stay on, and is DTC B2-Cx indicated?

   YES—Go to step 3.

   NO—Intermittent failure, the system is OK at this time. Go to Troubleshooting Intermittent Failures (see page 24-25). If another DTC is indicated, troubleshoot the DTC. ■
3. Turn the ignition switch to LOCK (0).
4. Disconnect the negative cable from the battery, then wait at least 3 minutes.

5. Disconnect SRS unit connector C (28P) from the SRS unit (see step 10 on page 24-22).

6. Disconnect the left side wire harness 2P connector (A) from the rear safing sensor.

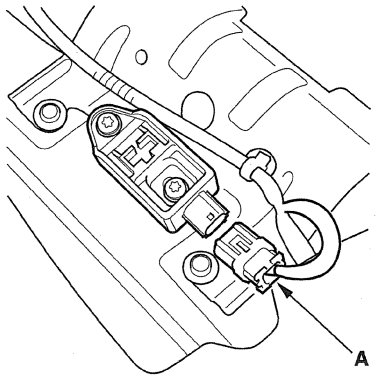

7. Measure the resistance between SRS unit connector C (28P) terminal No. 5 and body ground. There should be an open circuit or at least 1 MΩ.

SRS UNIT CONNECTOR C (28P)

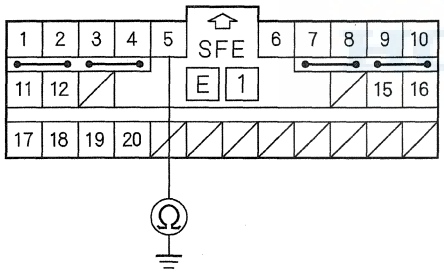

Wire side of female terminals

Is the resistance as specified?

YES—Go to step 8.

NO—Short to ground in the left side wire harness or the right side wire harness; replace the faulty harness, then clear the DTC. ■

8. Measure the resistance between SRS unit connector C (28P) terminals No. 5 and No. 6. There should be an open circuit or at least 1 MΩ.

SRS UNIT CONNECTOR C (28P)

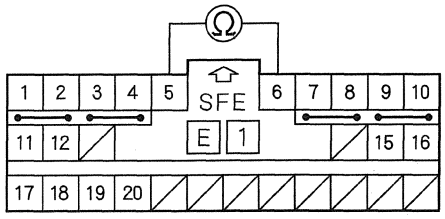

Wire side of female terminals

Is the resistance as specified?

YES—Faulty rear safing sensor or SRS unit; replace the rear safing sensor (see page 24-218), then clear the DTC. If the problem is still present, replace the SRS unit (see page 24-215). ■

NO—Short to another wire in the left side wire harness or the right side wire harness; replace the faulty harness, then clear the DTC. ■

DTC Troubleshooting (cont'd)

DTC B2-2x, B2-8x, B2-9x, B2-Bx ("x" can be 0 thru 9 or A thru F): Internal Failure of the Rear Safing Sensor

NOTE: Before doing this troubleshooting procedure, review SRS Precautions and Procedures (see page 24-14) and General Troubleshooting Information (see page 24-23).

1. Clear the DTC memory (see page 24-24).

2. Turn the ignition switch to ON (II), and check that the SRS indicator comes on for about 6 seconds and then goes off.

   Does the SRS indicator stay on, and is DTC B2-2x, B2-8x, B2-9x, or B2-Bx indicated?

   YES—Replace the rear safing sensor (see page 24-218). If the DTC returns, replace the SRS unit (see page 24-215). ■

   NO—Intermittent failure, the system is OK at this time. Go to Troubleshooting Intermittent Failures (see page 24-25). If another DTC is indicated, troubleshoot the DTC. ■

DTC Fx-11 ("x" can be 0 thru 9 or A thru F): Airbags and/or Tensioners Deployment Recorded

NOTE:
- Before doing this troubleshooting procedure, review SRS Precautions and Procedures (see page 24-14) and General Troubleshooting Information (see page 24-23).
- Refer to the DTCs shown:
  - DTC F1-11: Driver's airbag and/or driver's seat belt tensioner deployed.
  - DTC F2-11: Front passenger's airbag and/or front passenger's seat belt tensioner deployed.
  - DTC F3-11: Driver's side airbag, left side curtain airbag, and/or driver's seat belt tensioner deployed.
  - DTC F4-11: Front passenger's side airbag, right side curtain airbag, and/or front seat belt tensioner deployed.

When any airbags or tensioners have deployed, go to Component Replacement/Inspection After Deployment (see page 24-194). ■

Symptom Troubleshooting

SRS indicator does not come on

NOTE: Before this troubleshooting, review Battery Terminal Disconnection and Reconnection (see page 22-91).

1. Turn the ignition switch to ON (II), and see if the other indicators come on (brake system, etc).

   Do the other indicators come on?

   YES—Go to step 2.

   NO—Go to step 11.

2. Turn the ignition switch to LOCK (0), then remove the gauge control module (see page 22-419). Disconnect gauge control module connector A (20P) and connector B (28P) from the gauge control module.

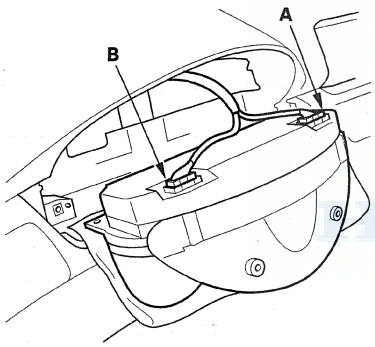

3. Measure the resistance between gauge control module connector A (20P) terminal No. 8 and body ground. There should be less than 1.0 Ω.

GAUGE CONTROL MODULE CONNECTOR A (20P)

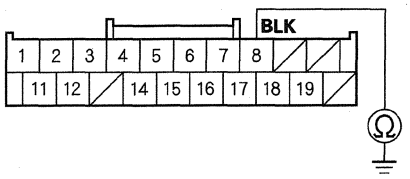

Wire side of female terminals

Is the resistance as specified?

YES—Go to step 4.

NO—Open in the dashboard wire harness or faulty body ground terminal (G501) (see page 22-32). If the body ground terminal is OK, replace dashboard wire harness. ■

4. Measure the voltage between gauge control module connector A (20P) terminal No. 12 and body ground within the first 6 seconds after turning the ignition switch to ON (II). There should be about 1.0 V for 6 seconds and then about 11 V.

GAUGE CONTROL MODULE CONNECTOR A (20P)

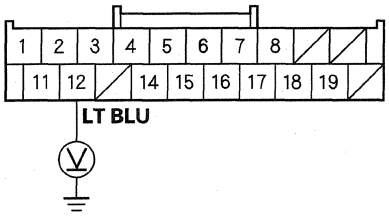

Wire side of female terminals

Is the voltage as specified?

YES—Faulty SRS indicator circuit in the gauge control module; replace the gauge control module (see page 22-419). ■

NO—Go to step 5.

(cont'd)

Symptom Troubleshooting (cont'd)

5. Turn the ignition switch to LOCK (0).
6. Disconnect the negative cable from the battery, then wait at least 3 minutes.
7. Disconnect SRS unit connector A (28P) from the SRS unit (see step 10 on page 24-22).
8. Reconnect the negative cable to the battery.
9. Turn the ignition switch to ON (II).
10. Measure the voltage between gauge control module connector A (20P) terminal No. 12 and body ground. There should be less than 0.2 V.

GAUGE CONTROL MODULE CONNECTOR A (20P)

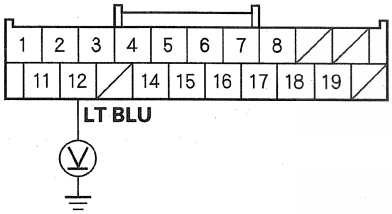

Wire side of female terminals

Is the voltage as specified?

YES—Faulty SRS unit; replace the SRS unit (see page 24-215). ■

NO—Short to power in the dashboard wire harness or the junction connector; replace dashboard wire harness. ■

11. Turn the ignition switch to LOCK (0). Check the No. 21 (10 A) fuse in the driver's under-dash fuse/relay box.

Is the fuse blown?

YES—Go to step 14.

NO—Go to step 12.

12. Turn the ignition switch to ON (II).
13. Measure the voltage between gauge control module connector B (28P) terminal No. 1 and body ground. There should be battery voltage.

GAUGE CONTROL MODULE CONNECTOR B (28P)

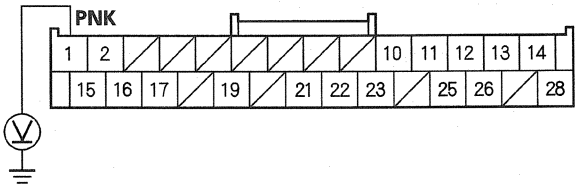

Wire side of female terminals

Is there battery voltage?

YES—Faulty SRS indicator circuit in the gauge control module or poor connection at gauge control module connector B (28P) and the gauge control module; if the connection is OK, replace the gauge control module (see page 22-419). ■

NO—Open in the driver's under-dash fuse/relay box No. 21 (10 A) fuse circuit, or open in the PNK wire of dashboard wire harness or junction connector. If the driver's under-dash fuse/relay box is OK, replace dashboard wire harness. ■

14. Replace the No. 21 (10 A) fuse, then check to see if the indicators come on.

Do the indicators come on?

YES—The system is OK at this time. ■

NO—Repair the short to ground in the driver's under-dash fuse/relay box No. 21 (10 A) fuse circuit. ■

SRS indicator stays on, but no DTCs are stored, or cannot be read

NOTE:
- A new SRS unit must sense the entire system is OK before completing its initial self-test. The most common cause of an incomplete self-test is the failure to replace all deployed parts after a collision, in particular seat belt tensioners (see page 24-208).
- A battery/system voltage above 15.2 V can cause the SRS indicator to come on without storing any DTCs.
- Before this troubleshooting, review Battery Terminal Disconnection and Reconnection (see page 22-91).

1. Disconnect the negative cable from the battery, then wait at least 3 minutes.

2. Disconnect SRS unit connector A (28P) from the SRS unit (see step 10 on page 24-22).

3. Remove the gauge control module (see page 22-419). Disconnect gauge control module connector A (20P) from the gauge control module.

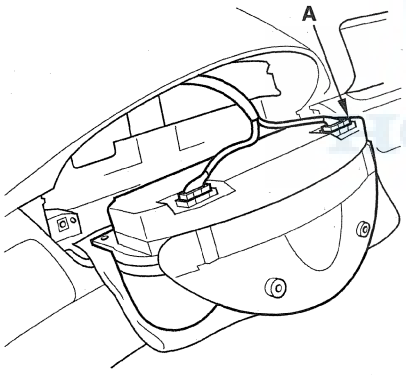

4. Measure the resistance between gauge control module connector A (20P) terminal No. 12 and SRS unit connector A (28P) terminal No. 11. There should be less than 1.0 Ω.

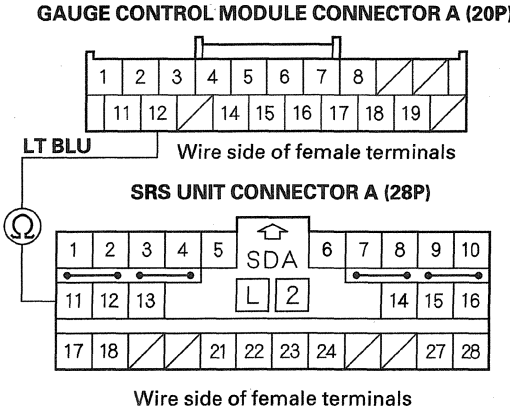

Is the resistance as specified?

YES—Go to step 5.

NO—Open in the dashboard wire harness; replace the dashboard wire harness. ■

5. Reconnect the negative cable to the battery.

(cont'd)

Symptom Troubleshooting (cont'd)

6. Reconnect gauge control module connector A (20P) to the gauge control module.

7. Turn the ignition switch to ON (II).

8. Install a jumper wire between gauge control module connector A (20P) terminal No. 12 and gauge control module connector B (28P) terminal No. 1. The SRS indicator should go off.

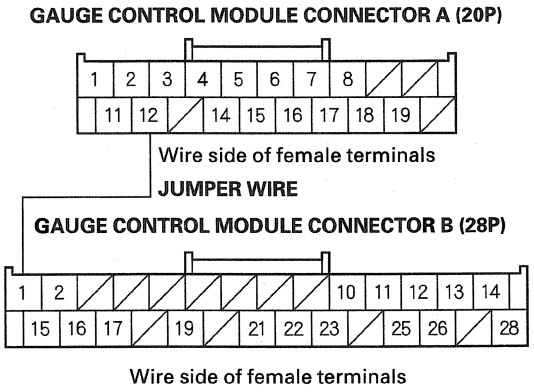

Does the SRS indicator go off?

YES—Faulty SRS unit or poor connection at SRS unit connector A (28P) and the SRS unit; check the connection. If the connection is OK, replace the SRS unit (see page 24-215). ■

NO—Faulty SRS indicator circuit in the gauge control module or poor connection at gauge control module connector A or B; check the connection. If the connection is OK, replace the gauge control module (see page 22-419). ■

Passenger's airbag cutoff indicator stays on or comes on suddenly

NOTE: Under the following conditions, the passenger's airbag cutoff indicator stays on or comes on suddenly:
- When no one is sitting on the front passenger's seat, but there is an object on the seat more than 5 kg (11 lbs).
- The seat belt is buckled, but no one is sitting on the front passenger's seat.
- Someone who is less than about 30 kg (65 lbs) is sitting on the front passenger's seat.

1. Check for these items, then recheck the passenger's airbag cutoff indicator.

   - The front passenger's seat is installed correctly.
   - Nothing is/was on the front passenger's seat.
   - Nothing is/was under the front passenger's seat.
   - Nothing is/was in the front passenger's seat-back pocket.
   - Whoever was sitting on the front passenger's seat was sitting in the proper sitting position.
   - The seat weight sensors may not measure the correct weight of the front passenger. If the passenger is more than 30 kg (65 lbs) but is supporting some of their body weight with their feet on the floor, or with their hands and arms on an arm rest, the actual weight of the passenger is not measured.

   Does the passenger's airbag cutoff indicator stay on?

   YES—Go to step 2.

   NO—Troubleshooting is complete. ■

2. Connect the HDS to the data link connector (DLC) (see page 24-23).

3. Turn the ignition switch to ON (II).

4. Make sure the HDS communicates with the vehicle and the SRS unit. If it does not communicate, troubleshoot the DLC circuit (see page 11-211).

5. Select the INSPECTION menu on the HDS, then select AFTER REPLACING FRONT PASSENGER'S SEAT COMPONENT(S), and follows the prompts.

   Does the passenger's airbag cutoff indicator stay on?

   YES—Go to step 6.

   NO—Troubleshooting is complete. ■

6. Select the INSPECTION menu on the HDS, then select AFTER A VEHICLE COLLISION, and follow the prompts.

   Does the passenger's airbag cutoff indicator stay on?

   YES—Faulty SRS unit; replace the SRS unit (see page 24-215). If the problem is still present, replace the ODS unit (see page 24-220), and then if the problem is still present, replace the front passenger's weight sensors (see page 24-219). ■

   NO—Troubleshooting is complete. ■

Component Replacement/Inspection After Deployment

NOTE:
- Before doing any SRS repairs, check the DTCs (see page 24-23) for the less obvious deployed components (seat belt tensioners, front impact sensors, side airbag sensors, etc.).
- Do not replace the ODS unit unless it is physically damaged or a specific fault was found during DTC troubleshooting.
- After a vehicle collision, do the ODS unit operation check (see page 24-28).
- After a vehicle collision, inspect the front seat active head restraints (see page 20-113).

After a collision where the seat belt tensioners deployed, replace these items:
- SRS unit
- Seat belt tensioners
- Front impact sensors

After a collision where the front airbag(s) deployed, replace these items:
- SRS unit
- Deployed airbag(s)
- Seat belt tensioners
- Front impact sensors
- Dashboard

After a collision where the side airbag(s) deployed, replace these items:
- SRS unit
- Deployed side airbag(s)
- Airbag attachment wire
- Side impact sensor(s) (first) for the side(s) that deployed
- Side impact sensor(s) (second) for the side(s) that deployed
- B-pillar lower trim
- Seat belt tensioners

After a collision, where a side curtain airbag has deployed, replace the items for the side(s) that deployed:
- SRS unit
- Deployed side curtain airbag(s)
- Seat belt tensioner(s) for the side(s) that deployed
- Side impact sensor(s) (first) for the side(s) that deployed
- Side impact sensor(s) (second) for the side(s) that deployed
- Rear safing sensor
- Roof trim
- A-pillar trim
- B-pillar trim
- C-pillar trim
- Front grab handle
- Rear grab handle
- All related trim clips
- Sunvisor

After a moderate to severe side or rear collision, inspect for any damage on the side curtain airbag or other related components. Replace the components as needed.

A-pillar trim

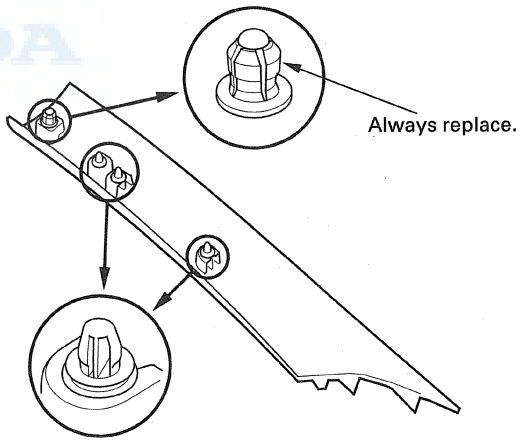

B-pillar trim

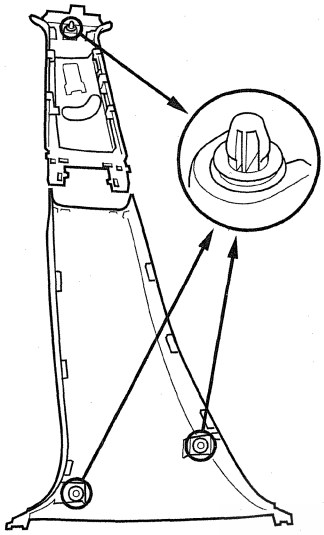

C-pillar trim

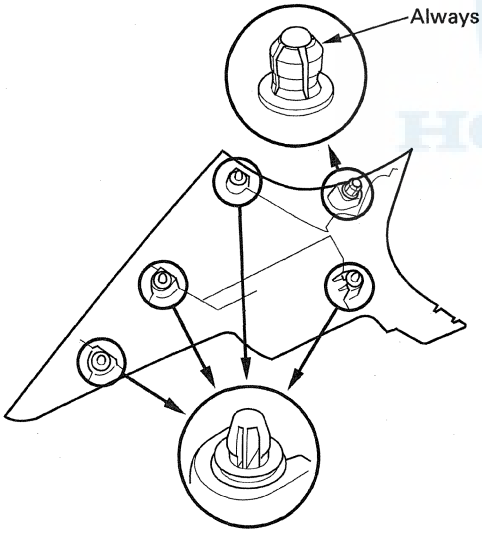

During the repair process, inspect these areas:

- Inspect all the SRS wire harnesses. Replace, do not repair, any damaged harnesses.
- Inspect the cable reel for heat damage. If there is any damage, replace the cable reel.

After the vehicle is completely repaired, turn the ignition switch to ON (II). If the SRS indicator comes on for about 6 seconds and then goes off, the SRS is OK. If the indicator does not function properly, use the HDS SRS Menu Method to read the DTC (see page 24-23). If you cannot retrieve a code, do the SRS symptom troubleshooting.

(cont'd)

Component Replacement/Inspection After Deployment (cont'd)

Checking and Adjusting the Headliner/Pillar Trim Overlap

To prevent the side curtain airbag from deploying and damaging the pillar trim, the overlap between the headliner and pillar trim must be less then 15 mm (0.6 in). To check the overlap, do this:

1. Install the headliner (A) and the pillar trim (B).

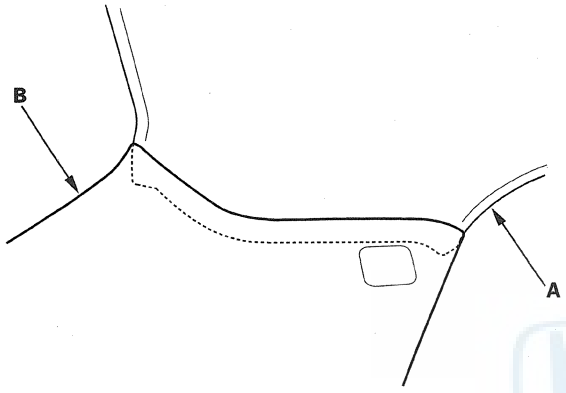

This illustration shows A-pillar.

2. Apply masking tape on the headliner to mark the upper edge of each pillar trim.

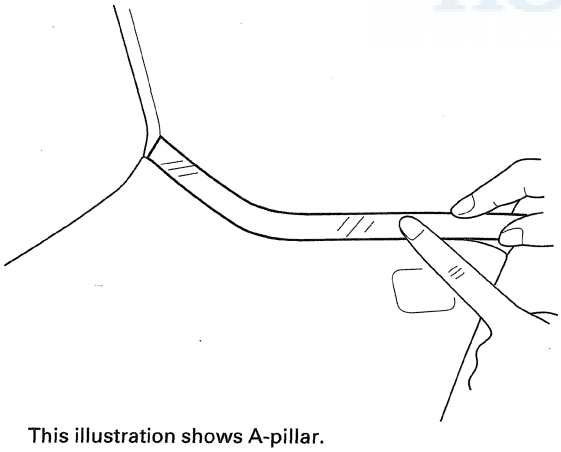

This illustration shows A-pillar.

3. Remove the pillar trim, and measure the headliner overlap.

   - If the overlap is less than 15 mm (0.6 in), remove the tape, and install the pillar trim.
   - If the overlap is more than 15 mm (0.6 in), go to step 4.

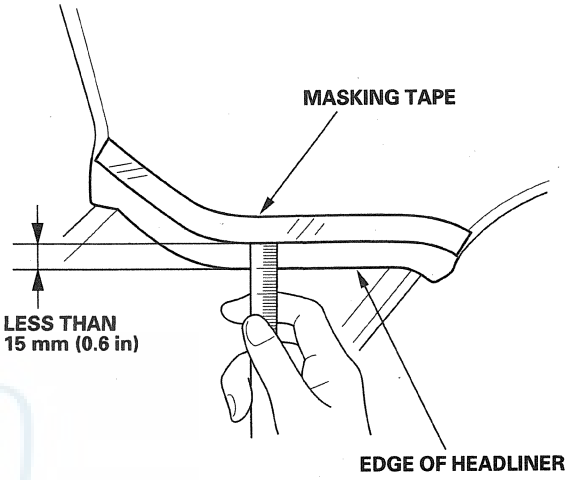

This illustration shows A-pillar.

4. Carefully trim the headliner with a utility knife, reducing the overlap to less than 15 mm (0.6 in).

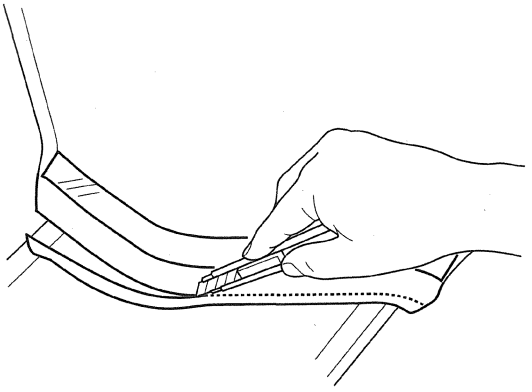

This illustration shows A-pillar.

5. Remove the tape, and install the pillar trim.

Driver's Airbag Replacement

NOTE: If replacing the driver's airbag after deployment, refer to Component Replacement/Inspection After Deployment (see page 24-194) for a complete list of other parts that must also be replaced.

Removal

1. Do the battery terminal disconnection procedure (see page 22-91), then wait at least 3 minutes before starting work.

2. Remove the access panel (A) from the steering wheel, then disconnect the driver's airbag 4P connector (B) from the cable reel.

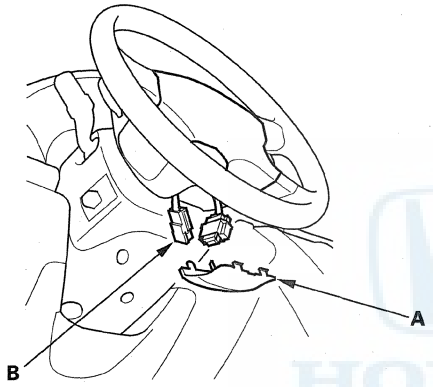

3. Remove the two TORX bolts (A) using a TORX T30 bit.

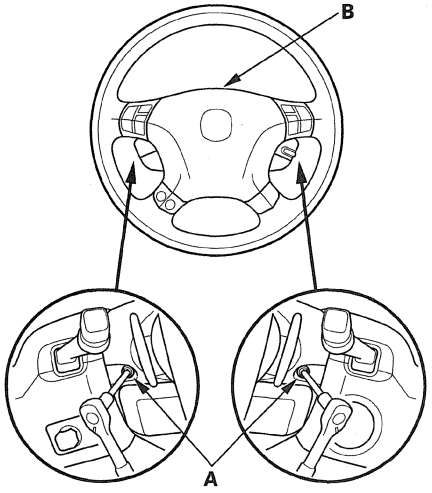

4. Disconnect the horn switch connector (1P), then remove the driver's airbag (B).

Installation

1. Place the driver's airbag (A) in the steering wheel, connect the horn switch connector (1P), then secure it with new TORX bolts (B).

B
9.8 N·m
(1.0 kgf·m, 7.2 lbf·ft)
Replace.

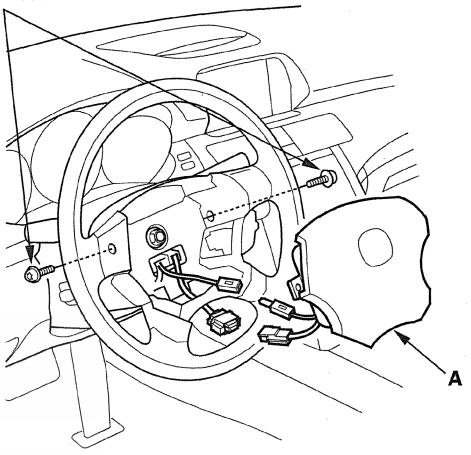

(cont'd)

Driver's Airbag Replacement (cont'd)

2. Connect the cable reel to the driver's airbag 4P connector (A), then install the access panel (B) on the steering wheel.

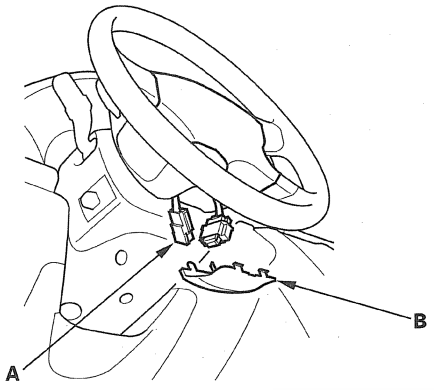

3. Do the battery terminal reconnection procedure (see page 22-91).

4. Clear any DTCs (see page 24-24).

5. After installing the airbag, confirm proper system operation:

   - Turn the ignition switch to ON (II); the SRS indicator should come on for about 6 seconds and then go off.
   - Make sure the horn button works.
   - Make sure the steering wheel switches work properly.

Front Passenger's Airbag Replacement

NOTE: If replacing the passenger's airbag after deployment, refer to Component Replacement/ Inspection After Deployment (see page 24-194) for a complete list of other parts that must also be replaced.

Removal

1. Do the battery terminal disconnection procedure (see page 22-91), then wait at least 3 minutes before starting work.

2. Remove the glove box (see page 20-103).

3. Disconnect the front passenger's airbag 4P connector (A) from dashboard wire harness.

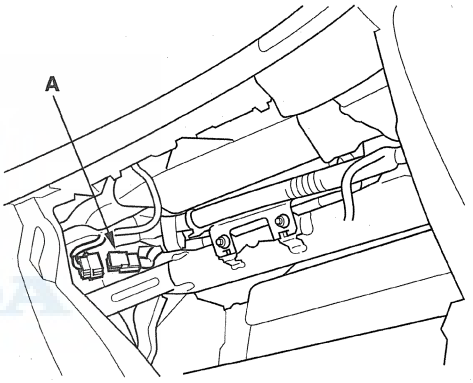

4. Remove the front passenger's air conditioning duct (A).

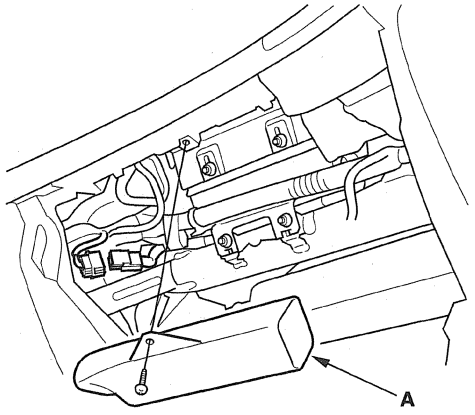

5. Remove the mounting nuts (A) from the bracket. Remove the front passenger's airbag (B).

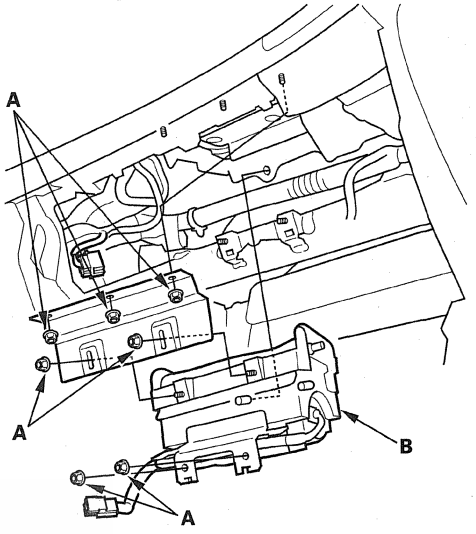

(cont'd)

Front Passenger's Airbag Replacement (cont'd)

Installation

1. Place the front passenger's airbag (A) into the bracket. Torque the front passenger's airbag mounting nuts (B).

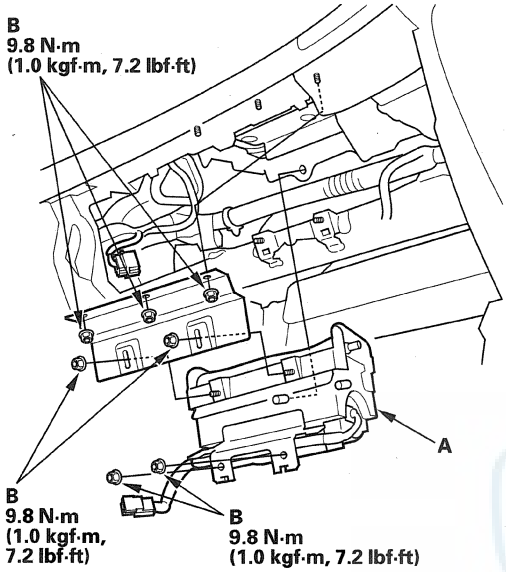

2. Install the front passenger's air conditioning duct (A) with the screw.

   NOTE: Make sure the front passenger's air conditioning duct are connected securely.

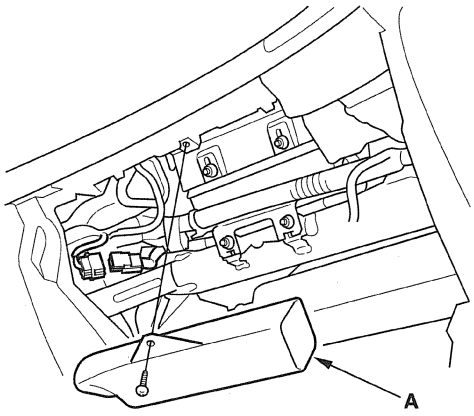

3. Connect the front passenger's airbag 4P connector (A) to dashboard wire harness A, then reinstall the glove box.

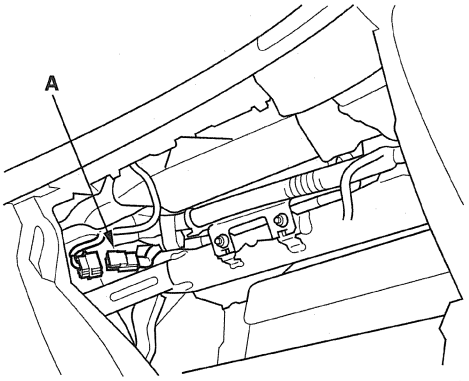

4. Do the battery terminal reconnection procedure (see page 22-91).

5. Clear any DTCs (see page 24-24).

6. After installing the airbag, confirm proper system operation: Turn the ignition switch to ON (II); the SRS indicator should come on for about 6 seconds and then go off.

Installation of the front passenger's airbag after a collision where it deployed

1. Do the battery terminal disconnection procedure (see page 22-91), then wait at least 3 minutes before starting work.

2. Remove the dashboard assembly from the vehicle (see page 20-107).

3. Place the new front passenger's airbag (A) into the bracket. Torque the front passenger's airbag mounting nuts (B).

   NOTE:
   - Be sure to install the front passenger's airbag so it does not interfere with other parts.
   - When you install the front passenger's airbag, be careful not to damage the bag.
   - Be sure to keep the new airbag clean and do not unfold or tamper with the cloth cover on the airbag.

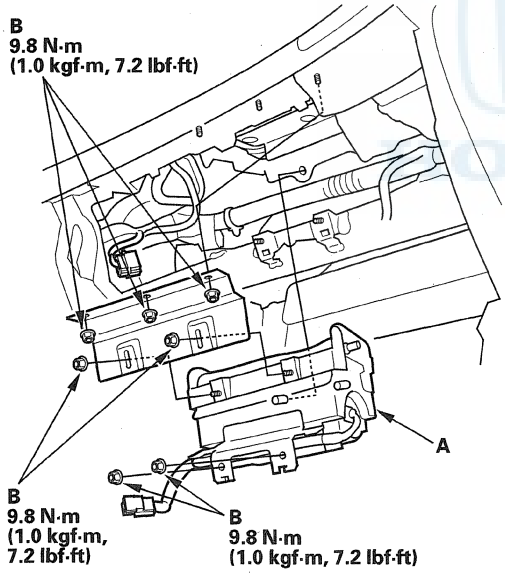

4. Install the dashboard assembly into the vehicle (see page 20-107).

5. Connect the front passenger's airbag 4P connector (A) to the dashboard wire harness A, then reinstall all removed parts.

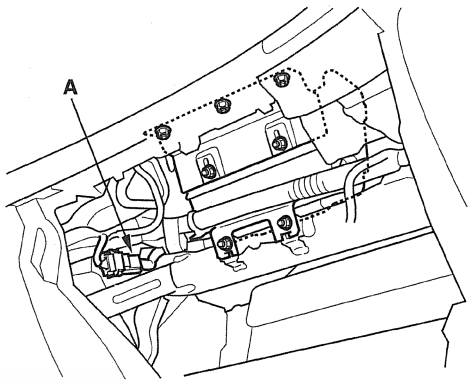

6. Do the battery terminal reconnection procedure (see page 22-91).

7. Clear any DTCs (see page 24-24).

8. After installing the airbag, confirm proper system operation: Turn the ignition switch to ON (II); the SRS indicator should come on for about 6 seconds and then go off.

Side Airbag Replacement

NOTE: If replacing the side airbag after deployment, refer to Component Replacement/Inspection After Deployment (see page 24-194) for a complete list of other parts that must also be replaced.

Removal

1. Do the battery terminal disconnection procedure (see page 22-91), then wait at least 3 minutes before starting work.

2. Disconnect the side airbag harness 2P connector (A).

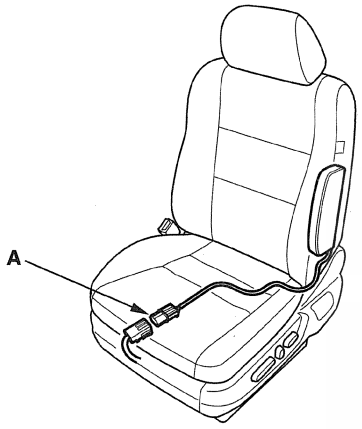

3. Remove the seat assembly (see page 20-114) and seat-back cover (see page 20-128).

   NOTE: If you are replacing a deployed airbag, replace the airbag attachment wire B (A).

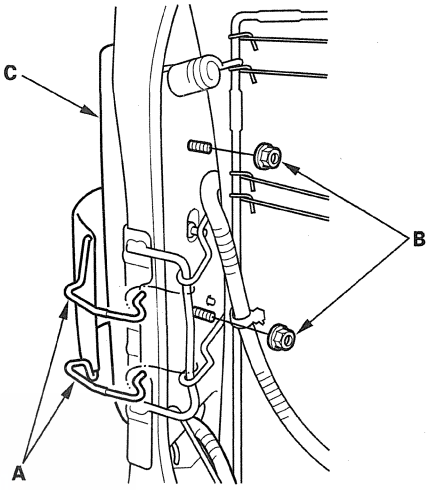

4. Remove the mounting nuts (B) and the side airbag (C).

Installation

NOTE:
- If the side airbag lid is secured by a tape, remove the tape.
- Do not open the lid of the side airbag cover.
- Use new mounting nuts tightened to the specified torque.
- Make sure that the seat-back cover is installed properly. Improper installation may prevent proper deployment.
- Be sure to install the harness so that it is not pinched or interfering with other parts.

1. Place the side airbag on the seat-back frame (A). Torque the new side airbag mounting nuts (B).

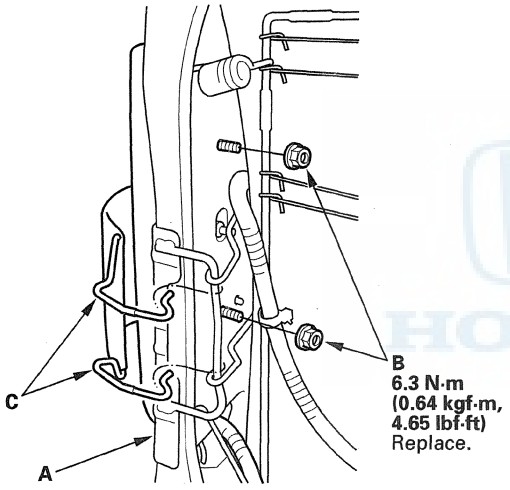

2. Install the seat-back cover in the reverse order of removal (see page 20-128).

   NOTE: If you are replacing a deployed airbag, replace the airbag attachment wire B (C).

3. Install the seat assembly (see page 20-114), then connect the side airbag harness 2P connector.

4. Move the front seat and the seat-back through their full ranges of movement, making sure the harness wires are not pinched or interfering with other parts.

5. Do the battery terminal reconnection procedure (see page 22-91).

6. Clear any DTCs (see page 24-24).

7. After installing the side airbag, confirm proper system operation: Turn the ignition switch to ON (II); the SRS indicator should come on for about 6 seconds and then go off.

Side Curtain Airbag Replacement

Removal

NOTE:
- If replacing the side curtain airbag after deployment, refer to Component Replacement/Inspection After Deployment (see page 24-194) for a complete list of other parts that must also be replaced.
- Review the interior trim replacement procedure before doing repair or service (see page 20-66).
- Removal of the side curtain airbag must be done according to Precautions and Procedures (see page 24-14).

1. Do the battery terminal disconnection procedure (see page 22-91), then wait at least 3 minutes before starting work.

2. Remove the headliner (see page 20-86).

3. Remove the AM/FM main antenna amplifier and the AM/FM subantenna amplifier (see page 23-115).

4. Disconnect the left or right side wire harness 2P connector (A) from the side curtain airbag.

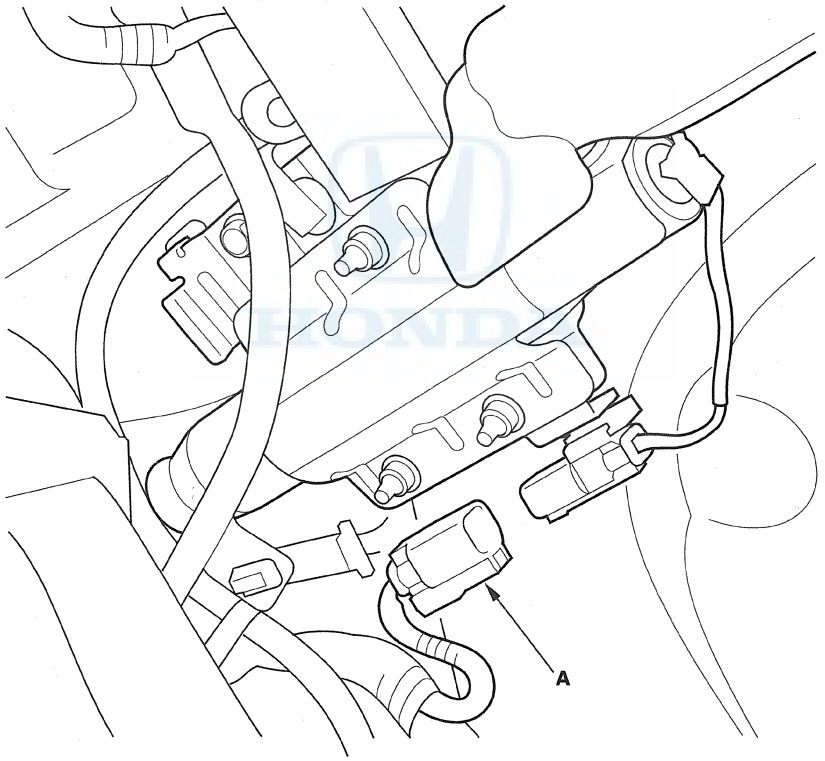

Left side shown; right side is similar.

5. Remove the mounting bolts (A) from the bracket.

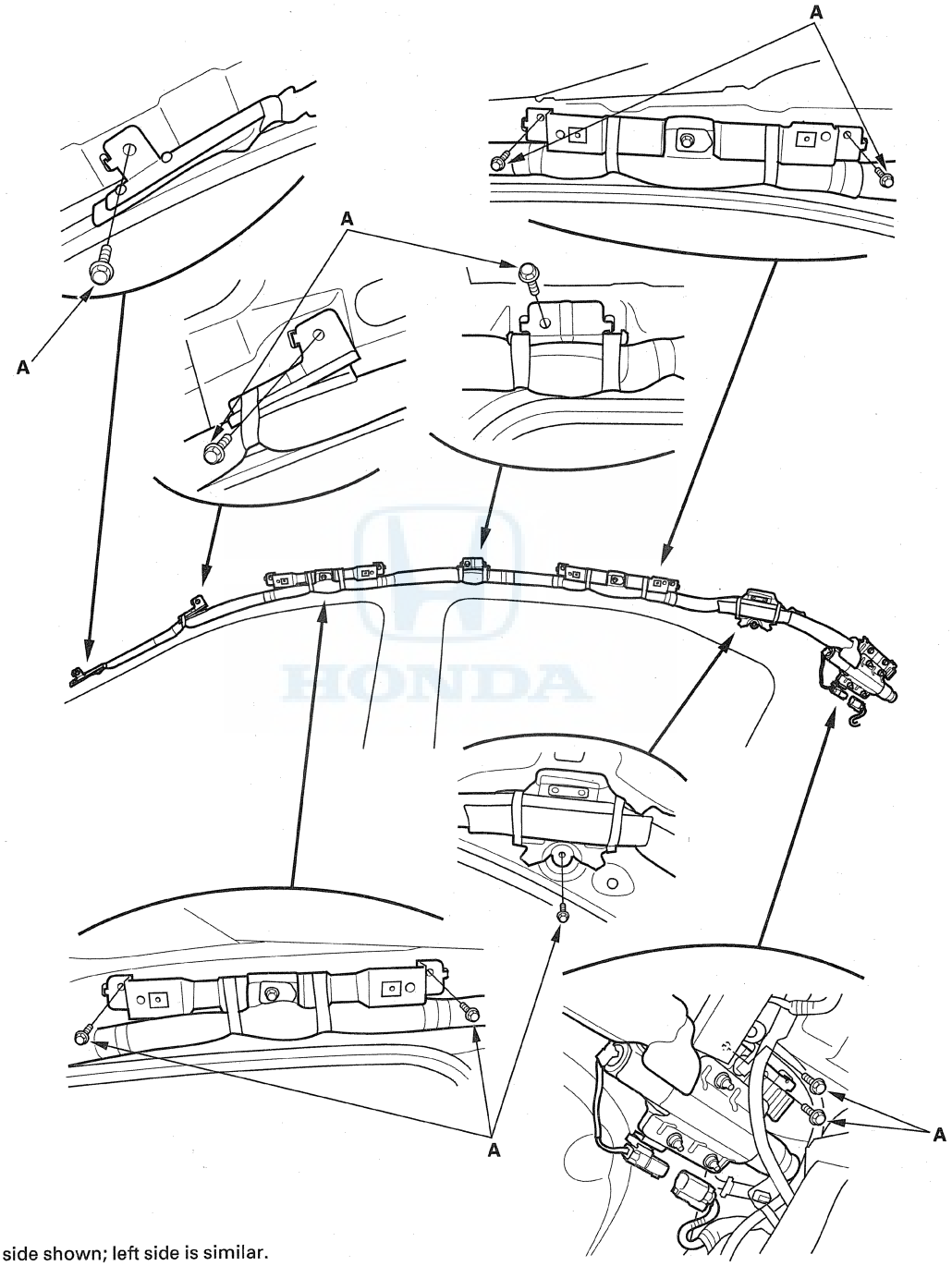

Right side shown; left side is similar.

(cont'd)

Side Curtain Airbag Replacement (cont'd)

Installation

NOTE:
- If replacing the side curtain airbag after deployment, refer to Component Replacement/Inspection After Deployment (see page 24-194) for a complete list of other parts that must also be replaced.
- Installation of the side curtain airbag must be done according to Precaution and Procedures (see page 24-14).
- If the airbag is frayed, or has any other visible damage, replace it. Do not attempt to repair an airbag.
- When you install the airbag, make sure it is not twisted, and that it is not caught between the inflator bracket by the bracket bolts.
- Make sure that the side curtain airbag inflator retainer is installed properly. Otherwise the airbag could incorrectly deploy and cause damage or injuries.
- If there is any damage to the side curtain airbag, do not try to repair it. Replace any damaged side curtain airbag.

1. Place the side curtain airbag assembly on the side of the roof. Tighten the side curtain airbag mounting bolts (A) to the specified torque.

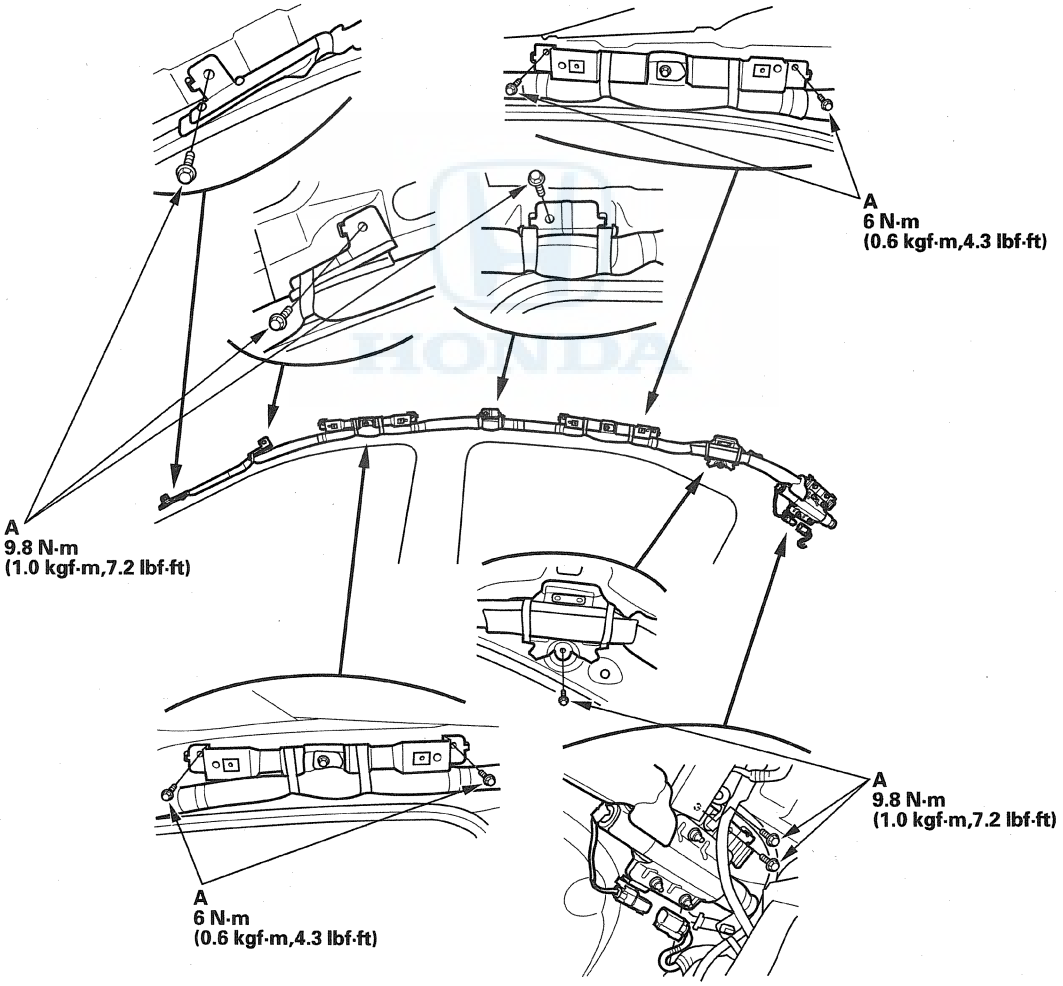

Right side shown; left side is similar.

2. Connect the left or right side wire harness 2P connector (A) to the side curtain airbag.

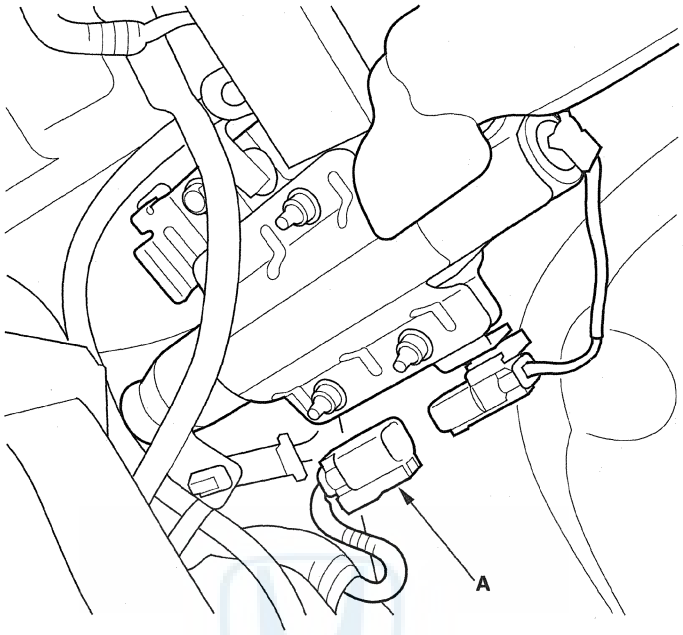

Left side shown; right side is similar.

3. Do the battery terminal reconnection procedure (see page 22-91).
4. Connect the HDS, and clear the DTCs (see page 24-24).
5. After installing the side curtain airbag, confirm proper system operation: Turn the ignition switch to ON (II); the SRS indicator should come on for about 6 seconds and then go off.
6. Install all removed parts in the reverse order of removal.
7. Confirm proper headliner/pillar trim overlap (see page 24-194).

Airbag and Tensioner Disposal

Special Tools Required
Deployment tool 07HAZ-SG00500

Before scrapping any airbags, side airbags, side curtain airbags, or seat belt tensioners (including those in a whole vehicle to be scrapped), the part(s) must be deployed. If the vehicle is still within the warranty period, the Acura District Parts and Service Manager must give approval and/or special instruction before deploying the part(s). Only after the part(s) have been deployed (as the result of vehicle collision, for example), can they be scrapped.
If the parts appear intact (not deployed), treat them with extreme caution. Follow this procedure.

Deploying Airbags in the vehicle

If an SRS equipped vehicle is to be entirely scrapped, its airbags, side airbags, side curtain airbags, and seat belt tensioners should be deployed while still in the vehicle. These parts should not be considered as salvageable parts and should never be installed in another vehicle.

1. Turn the ignition switch to LOCK (0), then disconnect the negative cable from the battery, then wait at least 3 minutes before starting work.
2. Confirm that each airbag, side airbag, side curtain airbags, or seat belt tensioner is securely mounted.
3. Confirm that the special tool is functioning properly by following the check procedure on the tool label.

Driver's Airbag

4. Remove the access panel (A) from the steering wheel, then disconnect the driver's airbag 4P connector (B) from the cable reel.

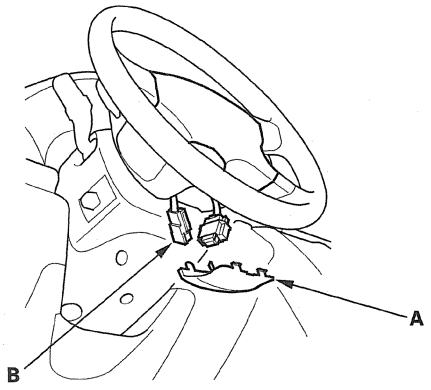

Front Passenger's Airbag

5. Remove the glove box, then disconnect the front passenger's airbag 4P connector (A) from dashboard wire harness.

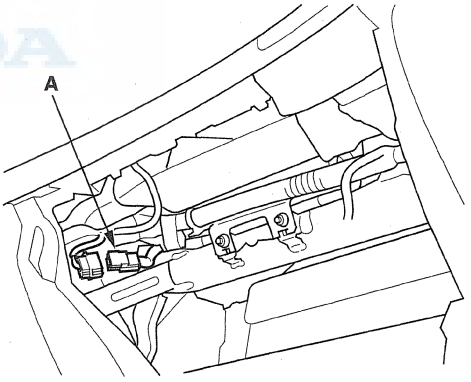

Side Airbag

6. Disconnect the side airbag 2P connector (A) from the left or right side wire harness.

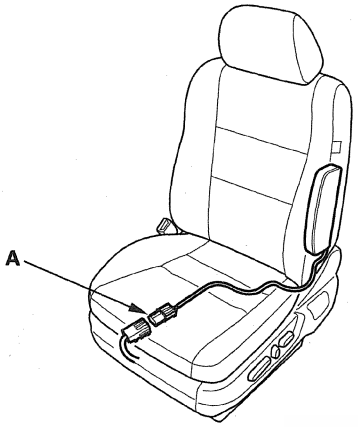

Side curtain airbag

7. Remove the C-pillar trim (see page 20-76).

8. Disconnect the left or right side wire harness 2P connector (A) from the side curtain airbag.

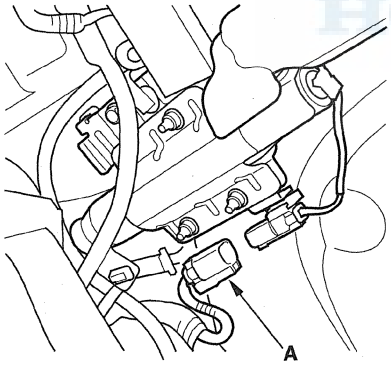

Seat belt tensioner

9. Remove the B-pillar lower trim (see page 20-72).

10. Disconnect the left or right side wire harness 4P connector (A) from the seat belt tensioner. Pull the seat belt out all the way and cut it.

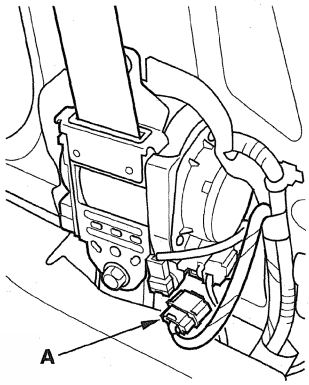

(cont'd)

Airbag and Tensioner Disposal (cont'd)

11. Cut off each connector, and strip the ends of the wires. Twist each pair of unlike colored wires together, and clip an alligator clip (A) from the deployment tool to each pair.

    NOTE:
    - Place the deployment tool at least 30 ft (10 m) away from the vehicle.
    - The driver's and front passenger's airbags have dual inflators. Twist each pair of unlike colored wires together, and clip an alligator clip to each pair.

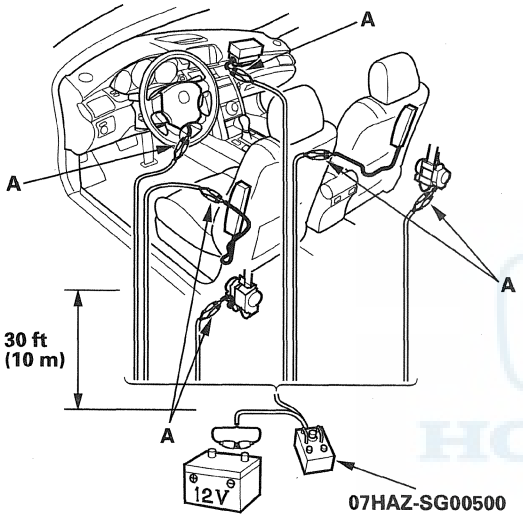

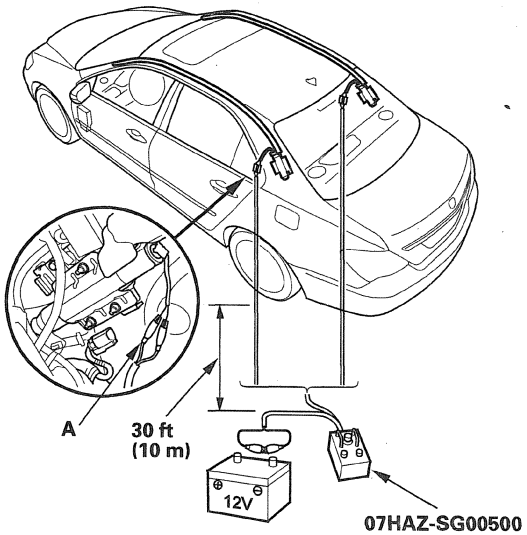

12. Connect a 12 volt battery to the tool.

    - If the green light on the tool comes on, the igniter circuit is defective and cannot deploy the component. Go to Disposal of Damaged Components.
    - If the red light on the tool comes on, the component is ready to be deployed.

13. Push the tool's deployment switch. The airbags and tensioners should deploy (deployment is both highly audible and visible: a loud noise and rapid inflation of the bag, followed by slow deflation).

    - If the components deploy and the green light on the tool comes on, continue with this procedure.
    - If a component does not deploy, and the green light comes ON, its igniter is defective. Go to Disposal of Damaged Components.
    - During deployment the airbags can become hot enough to burn you. Wait for 30 minutes after deployment before touching the airbags.

14. Dispose of the complete airbag. No part of it can be reused. Place it in a sturdy plastic bag (A), and seal it securely. Dispose of the deployed airbag according to your local regulations.

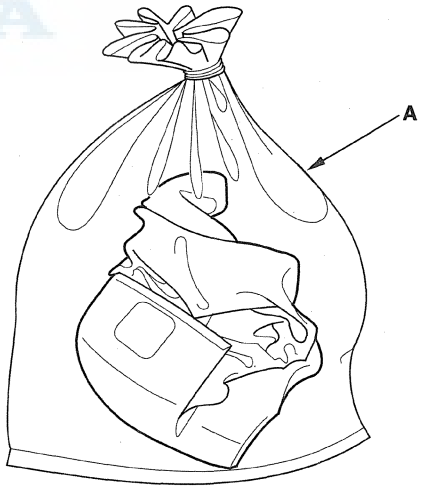

Deploying Components Out of the Vehicle

If an intact airbag or tensioner has been removed from a scrapped vehicle, or has been found defective or damaged during transit, storage, or service, it should be deployed as follows:

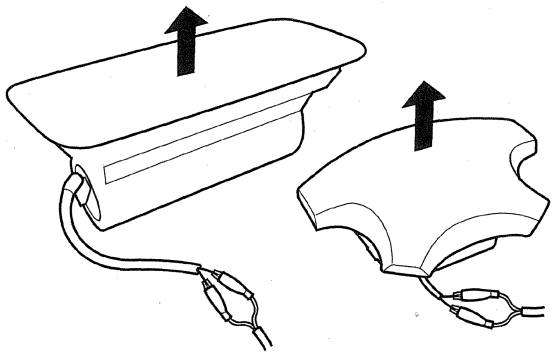

1. Confirm that the deployment tool is functioning properly by following the check procedure Deploying Airbags in the Vehicle on the tool label.
2. Position the airbag face up, outdoors, on flat ground, at least 30 feet (10 meters) from any obstacles or people.
3. Follow steps 9 through 12 of the in-vehicle deployment procedure.

   NOTE: The driver's and front passenger's airbags have dual inflators. Twist each pair of unlike colored wires together, and clip an alligator clip to each pair.

Disposal of Damaged Components

1. If installed in a vehicle, follow the removal procedure for the driver's airbag (see page 24-197), front passenger's airbag (see page 24-198), side airbag (see page 24-202), side curtain airbag (see page 24-204), and seat belt tensioner (see page 24-4).
2. In all cases, make a short circuit by cutting, stripping, and twisting together the two inflator wires.

   NOTE: The driver's and front passenger's airbags have dual inflators. The like color wires go to the individual inflators. Twist the like colored wires together.
3. Package the component in exactly the same packaging that the new replacement part came in.
4. Mark the outside of the box "DAMAGED AIRBAG NOT DEPLOYED," "DAMAGED SIDE AIRBAG NOT DEPLOYED," "DAMAGED SIDE CURTAIN AIRBAG NOT DEPLOYED," "DAMAGED SEAT BELT TENSIONER NOT DEPLOYED" so it does not get confused with your parts stock.
5. Contact your Acura District Parts and Service Manager for instructions on how and where to return it for disposal.

Deployment Tool Check

1. Connect the yellow clips to both the switch protector handles on the tool.
2. Push the operation switch: The green light should come on, indicating that the tool is operating properly and is ready for use. If the red light stays on, the tool is faulty, and another one must be used for the procedure.
3. Disconnect the tool clips and connectors from the protector handles and the battery.

Cable Reel Replacement

Removal

1. Make sure the wheels are aligned straight ahead.
2. Do the battery terminal disconnection procedure (see page 22-91), then wait at least 3 minutes before starting work.
3. Remove the driver's airbag (see page 24-197).
4. Disconnect the 20P connector (A) from the cable reel, then remove the steering wheel nut (B).

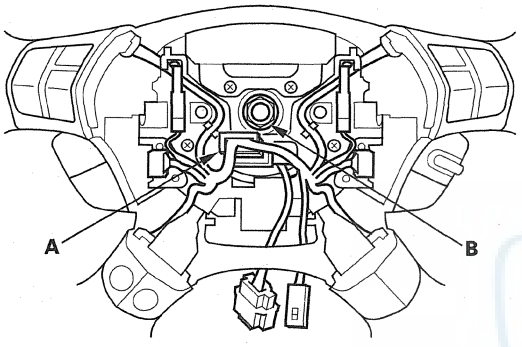

5. Confirm that the front wheels point straight ahead, then remove the steering wheel with a steering wheel puller (see page 17-22). Do not tap on the steering wheel or steering column shaft when removing the steering wheel.
6. Remove the driver's dashboard lower cover (see page 20-100).
7. Remove the column cover screws (A), then remove the column covers (B, C).

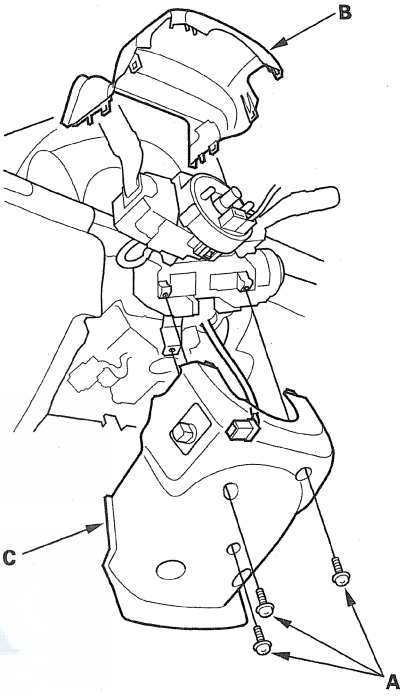

8. Disconnect the dashboard wire harness A 4P connector (A) from the cable reel 4P connector (B), then disconnect the dashboard wire harness A 20P connector (C) from the cable reel (D).

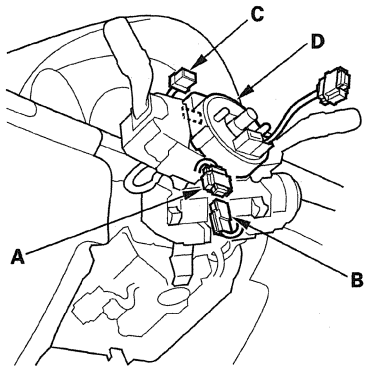

9. Release the lock tab (A) under the cable reel connector with a 90 ° hook shaped tool (B). Slide the tool below the cable reel connector just above the lock tab. Release the lower lock tab (C), and slide the cable reel off the column.

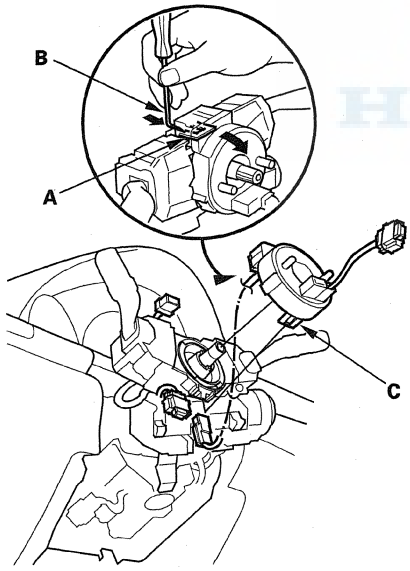

Installation

1. Before installing the steering wheel, make sure the front wheels are aligned straight ahead.
2. Do the battery terminal disconnection procedure (see page 22-91), then wait at least 3 minutes.
3. Set the turn signal cancelling sleeve (A) so that the projections (B) are aligned vertically.

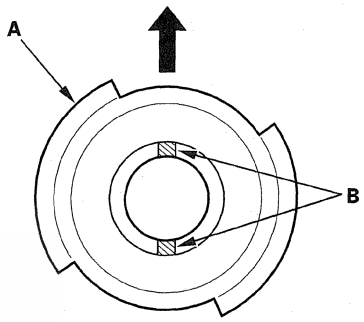

4. Carefully install the cable reel (A) on the steering column shaft. Then connect the 20P connector (B) to the cable reel, and connect the 4P connector (C) to the dashboard wire harness 4P connector (D).

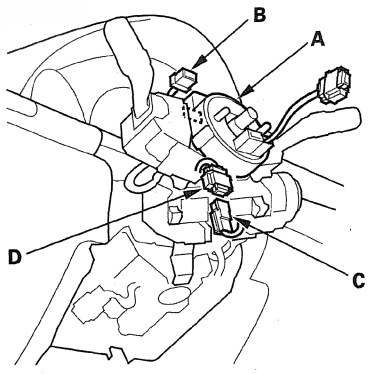

(cont'd)

Cable Reel Replacement (cont'd)

5. Install the steering column covers.

6. If necessary, center the cable reel. (New replacement cable reels come centered.) Do this by first rotating the cable reel clockwise until it stops. Then rotate it counterclockwise (three full turns) until the arrow mark (A) on the cable reel label points straight up.

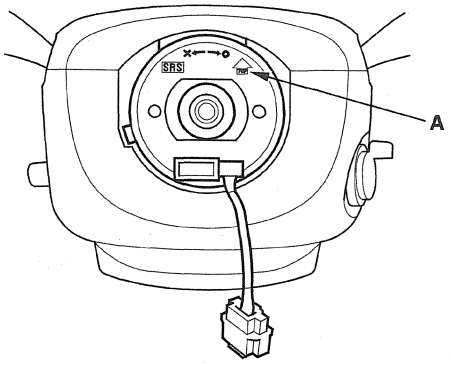

7. Position the two tabs (A) of the turn signal cancelling sleeve (B) as shown, and install the steering wheel on the steering column shaft, making sure the steering wheel hub (C) engages the pins (D) of the cable reel and tabs of the turn signal cancelling sleeve. Do not tap on the steering wheel or steering column shaft when installing the steering wheel.

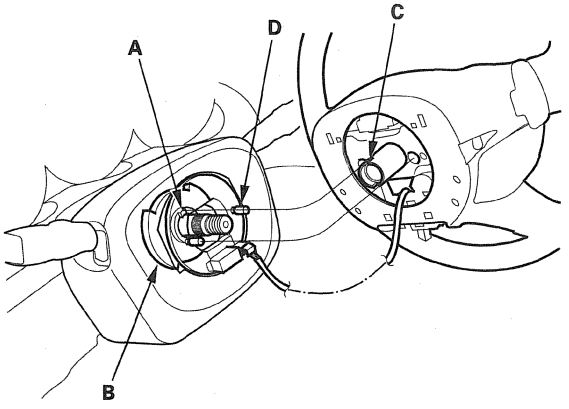

8. Install and torque a new steering wheel nut (A), then reconnect the 20P connector.

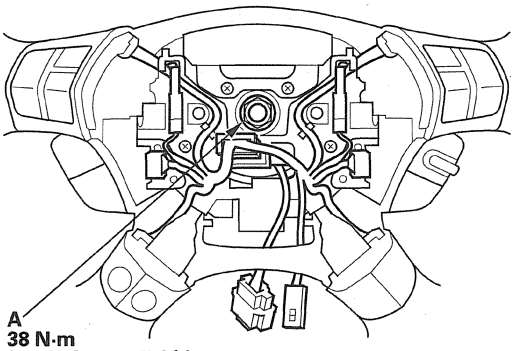

9. Install the driver's airbag (see page 24-197).

10. Do the battery terminal reconnection procedure (see page 22-91).

11. Clear any DTCs (see page 24-24).

12. After installing the cable reel, confirm proper system operation:

- Turn the ignition switch to ON (II); the SRS indicator should come on for about 6 seconds and then go off.
- After the SRS indicator has turned off, turn the steering wheel fully left and right to confirm the indicator does not come on.
- Make sure the horn and turn signal switches work properly.
- Make sure the steering wheel switches work properly.

SRS Unit Replacement

Removal

1. Do the battery terminal disconnection procedure (see page 22-91), then wait at least 3 minutes before starting work.
2. Remove the center trim (see page 20-97).
3. Remove the center console (see page 20-92).
4. Remove the rear vent duct (see step 5 on page 20-110).
5. Disconnect SRS unit connector A (28P), SRS unit connector B (28P), SRS unit connector C (28P), and remove the TORX bolts (D), then pull out the SRS unit.

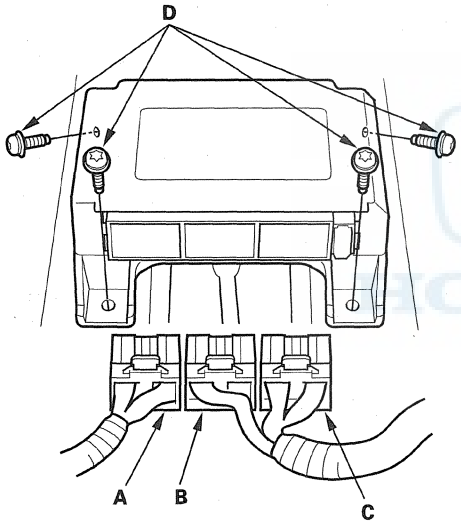

Installation

1. Install the SRS unit (A) with the new TORX bolts (B), then connect the connectors (C) to the SRS unit; push them into position until they click.

   NOTE: Be sure the SRS unit is sitting squarely against its bracket before torquing the TORX bolts.

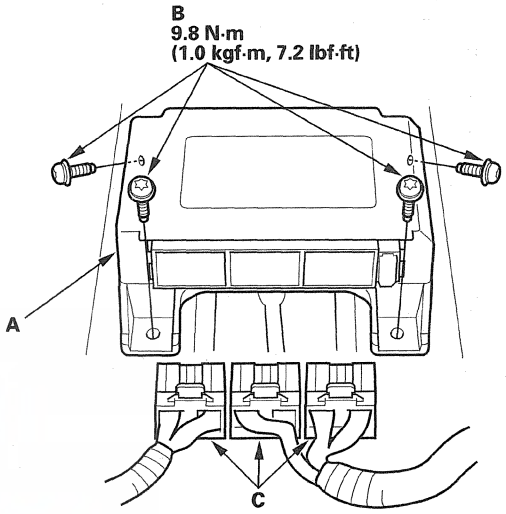

2. Do the battery terminal reconnection procedure (see page 22-91).
3. Calibrate the ODS unit (see page 24-27).
4. Do the front ODS unit operation check (see page 24-28).
5. After installing the SRS unit, confirm proper system operation: Turn the ignition switch to ON (II); the SRS indicator should come on for about 6 seconds and then go off.
6. Reinstall all removed parts.

Side Impact Sensor (First) Replacement

Removal

1. Do the battery terminal disconnection procedure (see page 22-91), then wait at least 3 minutes before starting work.
2. Remove the front door sill trim (see page 20-67) and the B-pillar lower trim panel (see page 20-72).
3. Disconnect the left or right side wire harness 2P connector (A) from the side impact sensor (first).

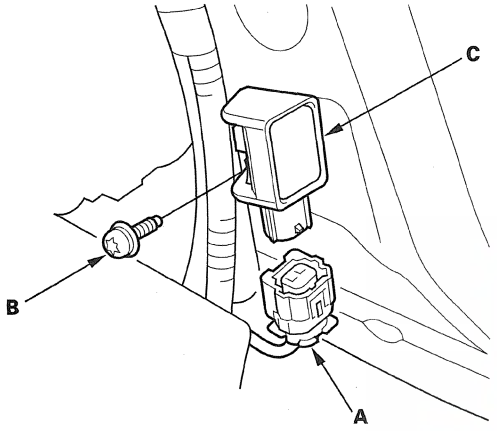

4. Remove the TORX bolt (B)using a TORX T30 bit, then remove the side impact sensor (first) (C).

Installation

1. Install the side impact sensor (first) with a new TORX bolt (A), then connect the left or right side wire harness 2P connector (B) to the side impact sensor (first) (C).

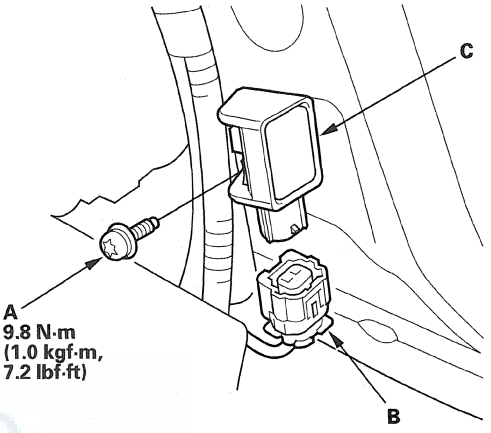

2. Do the battery terminal reconnection procedure (see page 22-91).
3. Clear any DTCs (see page 24-24).
4. Confirm proper SRS operation: Turn the ignition switch to ON (II); the SRS indicator should come on for about 6 seconds and then go off.
5. Reinstall all removed parts.

Side Impact Sensor (Second) Replacement

Removal

1. Do the battery terminal disconnection procedure (see page 22-91), then wait at least 3 minutes before starting work.

2. Disconnect the side impact sensor (second) 2P connector (A) from the left or right side wire harness.

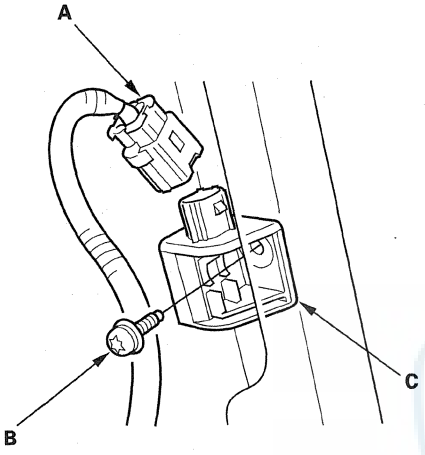

3. Remove the TORX bolt (B) using a TORX T30 bit, then remove the side impact sensor (second) (C).

Installation

1. Install the side impact sensor (second) with a new TORX bolt (A), then connect the left or right wire harness 2P connector (B) to the side impact sensor (second) (C).

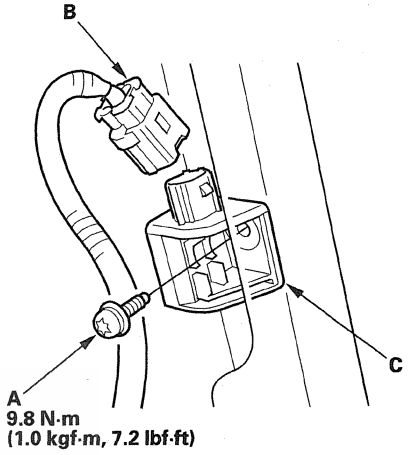

2. Do the battery terminal reconnection procedure (see page 22-91).

3. Clear any DTCs (see page 24-24).

4. Confirm proper SRS operation: Turn the ignition switch to ON (II); the SRS indicator should come on for about 6 seconds and then go off.

5. Reinstall all removed parts.

Rear Safing Sensor Replacement

Removal

1. Do the battery terminal disconnection procedure (see page 22-91), then wait at least 3 minutes before starting work.
2. Remove the rear seat (see page 20-140).
3. Disconnect the left side wire harness 2P connector (A) from the rear safing sensor.

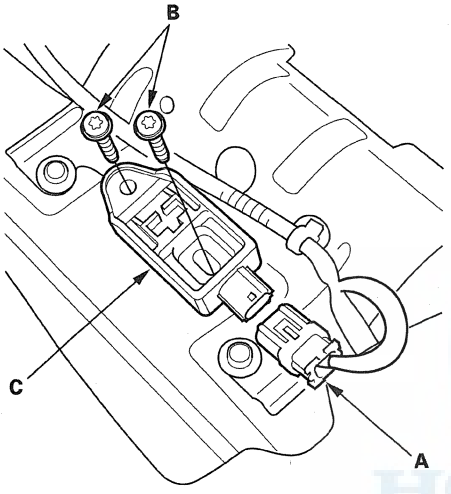

4. Remove the TORX bolts (B) using a TORX T30 bit, then remove the rear safing sensor (C).

Installation

1. Install the rear safing sensor with a new TORX bolts (A), then connect the left side wire harness 2P connector (B) to the rear safing sensor (C).

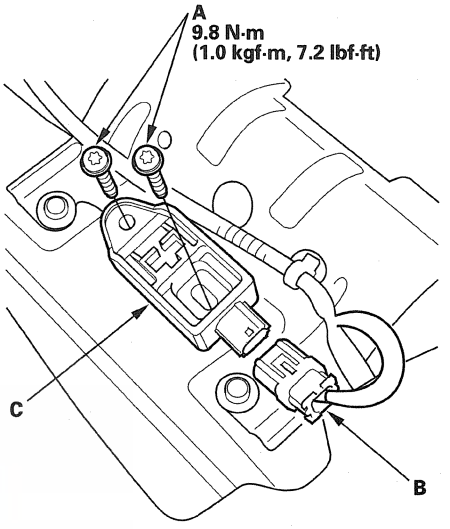

2. Do the battery terminal reconnection procedure (see page 22-91).
3. Clear any DTCs (see page 24-24).
4. Confirm proper SRS operation: Turn the ignition switch to ON (II); the SRS indicator should come on for about 6 seconds and then go off.
5. Reinstall all removed parts.

Front Passenger's Weight Sensor Replacement

Removal

NOTE:
- Removal of the front passenger's weight sensors must be done according to Precautions and Procedures (see page 24-14).
- The front passenger's weight sensors are part of the seat frame and must be replaced as an front passenger's seat frame assembly.

1. Do the battery terminal disconnection procedure (see page 22-91), then wait at least 3 minutes before starting work.

2. Remove the front passenger's seat frame/front passenger's weight sensor as an assembly (see page 20-126).

Installation

NOTE:
- Be sure to install the harness wires so they are not pinched or interfering with other parts.
- The front passenger's weight sensor are part of the seat frame and must be replaced as an assembly.

1. Install the removed parts to the new seat frame/ front passenger's weight sensor as an assembly.

2. Do the battery terminal reconnection procedure (see page 22-91).

3. Clear any DTCs (see page 24-24).

4. Calibrate the ODS unit (see page 24-27).

5. Confirm proper SRS operation: Turn the ignition switch to ON (II); the SRS indicator should come on for about 6 seconds and then go off.

HONDA

ODS Unit Replacement

Removal

1. Do the battery terminal disconnection procedure (see page 22-91), then wait at least 3 minutes before starting work.
2. Remove the front passenger's seat assembly (see page 20-114).
3. Pull out the seat-back cover/pad as needed (see page 20-128).
4. Remove the cover (A), then disconnect the front passenger's seat wire harness 18P connector (B) and OPDS sensors connectors from the ODS unit (C).

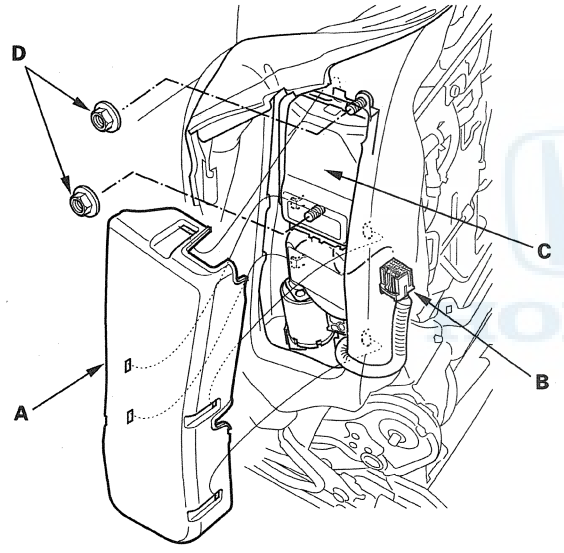

5. Remove the two nuts (D) and the ODS unit.

Installation

1. Place the ODS unit (A) on the seat-back frame. Install and torque the two nuts (B), and connect the front passenger's seat wire harness 18P connector (C) and OPDS sensors connectors to the ODS unit. Reinstall the cover (D).

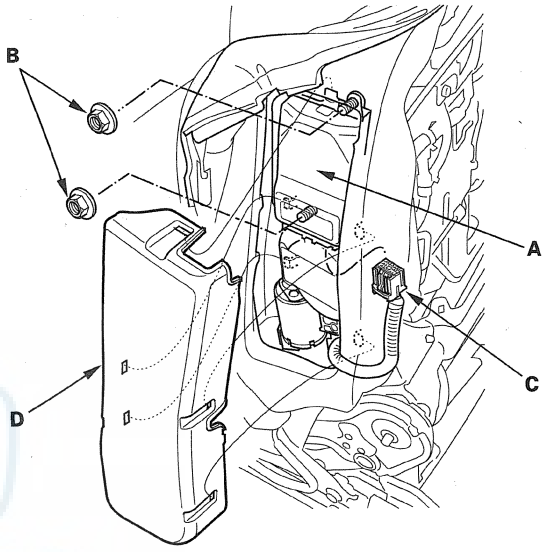

2. Install the seat-back cover/pad in the reverse order of removal (see page 20-128).
3. Install the front passenger's seat assembly (see page 20-114).
4. Do the battery terminal reconnection procedure (see page 22-91).
5. Set the seat-back in the normal position, and make sure there is nothing on the front passenger's seat.
6. Clear any DTCs (see page 24-24).
7. Initialize the ODS unit (see page 24-26).
8. Confirm proper SRS operation: Turn the ignition switch to ON (II); the SRS indicator should come on for about 6 seconds and then go off.

E-pretensioner Unit Replacement

NOTE:
- Do not turn the ignition switch to ON (II) while the e-pretensioner unit connectors are disconnected.
- Do not remove the parking brake cable from the parking brake pedal.

1. Remove the accelerator pedal module (see page 11-282).

2. Disconnect the connectors (A) from the e-pretensioner unit (B).

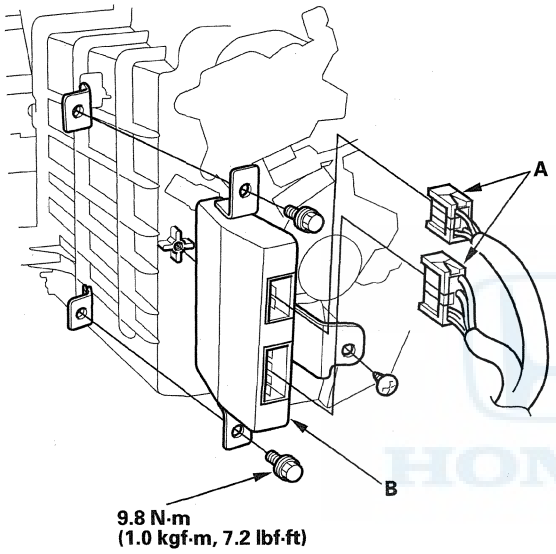

3. Remove the E-pretensioner unit from behind the heater unit.

4. Clear any DTCs (see page 24-24).

5. Install the unit in the reverse order of removal.

6. After installing the E-pretensioner unit, make sure the SRS indicator comes on for about 6 seconds after turning the ignition switch to ON (II), then goes off.

Front Impact Sensor Replacement

Removal

1. Do the battery terminal disconnection procedure (see page 22-91), then wait at least 3 minutes before starting work.
2. Remove the front bumper (see page 20-149).
3. Disconnect the engine compartment wire harness 2P connector (A), and using a TORX T30 bit, remove the two TORX bolts (B), then remove the front impact sensor (C).

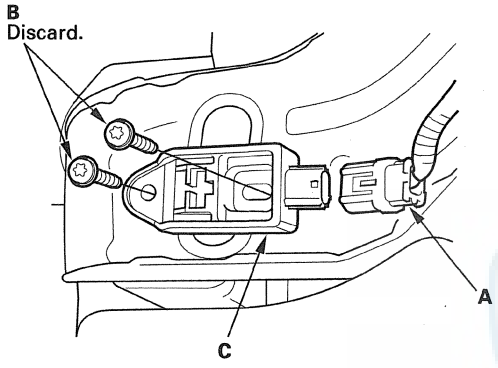

Installation

1. Install the front impact sensor with new TORX bolts (A), then connect the engine compartment wire harness 2P connector (B) to the front impact sensor (C).

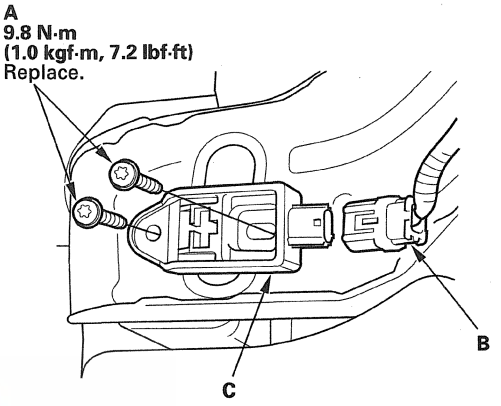

2. Do the battery terminal reconnection procedure (see page 22-91).
3. Clear any DTCs (see page 24-24).
4. Confirm proper SRS operation: Turn the ignition switch to ON (II); the SRS indicator should come on for about 6 seconds and then go off.
5. Reinstall all removed parts.

Driver's Seat Position Sensor Replacement

Removal

NOTE:
- Removal of the driver's seat position sensor must be done according to Precautions and Procedures (see page 24-14).
- Do not turn the ignition switch to ON (II), and do not connect the battery cable while removing the driver's seat position sensor.

1. Move the driver's seat all the way back, and all the way up, then tilt the seat-back all the way forward.
2. Do the battery terminal disconnection procedure (see page 22-91), then wait at least 3 minutes.
3. Remove the rear cover from the inner seat rail.
4. Disconnect the left side wire harness 2P connector (A) from the driver's seat position sensor.

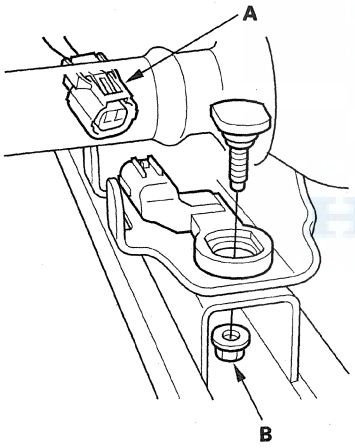

5. Remove the mounting nut (B), then remove the driver's seat position sensor.

Installation

NOTE:
- Be sure to install the harness wires so they are not pinched or interfering with other parts.
- Do not turn the ignition switch to ON (II), and do not connect the battery cable while installing the driver's seat position sensor.
- After installing the driver's seat position sensor, make sure it is clean. Keep it away from dust.

1. Install the new driver's seat position sensor with a mounting nut (A), then connect the left side wire harness 2P connector to the driver's seat position sensor (B). Reinstall the seat cover.

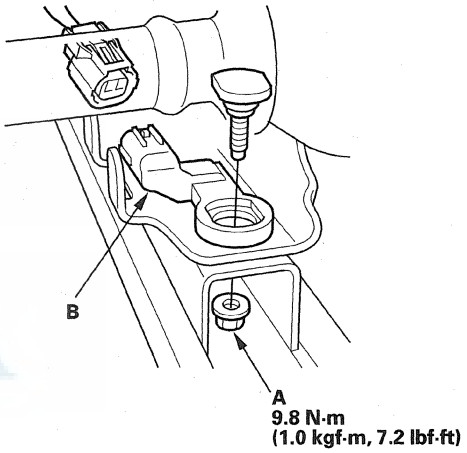

2. Do the battery terminal reconnection procedure (see page 22-91).
3. Clear any DTCs (see page 24-24).
4. Check the operation of the driver's seat position sensor with the HDS (see page 24-30).

Passenger's Airbag Cutoff Indicator Illumination Bulb Test

1. Remove the passenger's vent panel (see page 20-101).
2. Push out the passenger's airbag cutoff indicator from behind the passenger's vent panel.

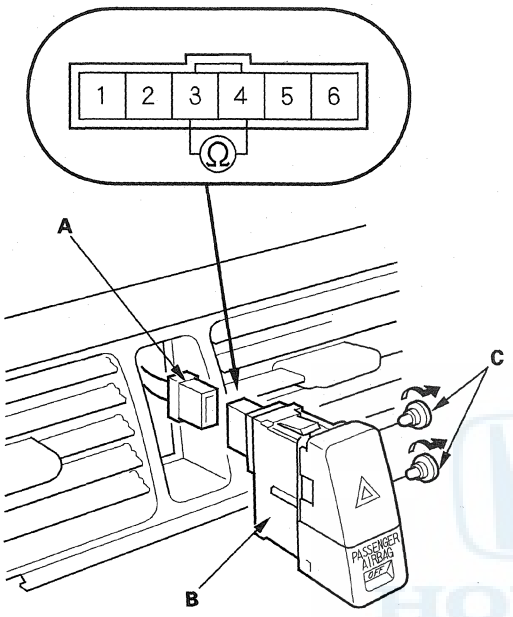

3. Disconnect the 6P connector (A) from the passenger's airbag cutoff indicator (B).
4. Check for continuity between the No. 3 and No. 4 terminals of the indicator. If there is no continuity, replace the both bulbs (C).

   NOTE: Both illumination bulbs are connected in parallel. If there is continuity, remove the upper, hazard switch illumination bulb, and recheck for continuity. If there is no continuity, replace the lower, passenger's airbag cutoff indicator illumination bulb.

5. Reinstall the parts in the reverse order of removal.

SUPPLEMENTAL RESTRAINT SYSTEM (SRS) (If driving support maintenance is required)

The Acura RL SRS includes a driver's airbag in the steering wheel hub, a passenger's airbag in the dashboard above the glove box, seat belt tensioners in the front seat belt retractors, side curtain airbags in the sides of the roof, and side airbags in the front seat-backs. Information necessary to safely service the SRS is included in this Service Manual. Items marked with an asterisk (*) on the contents page include or are located near SRS components. Servicing, disassembling, or replacing these items require special precautions and tools, and should be done by an authorized Acura dealer.

- To avoid rendering the SRS inoperative, which could lead to personal injury or death in the event of a severe frontal or side collision, all SRS service work should be done by an authorized Acura dealer.
- Improper service procedures, including incorrect removal and installation of the SRS, could lead to personal injury caused by unintentional deployment of the airbags, side airbags, and/or side curtain airbags.
- Do not bump or impact the SRS unit, front impact sensors, side impact sensors, or rear safing sensor, especially when the ignition switch is in ON (II), or for at least 3 minutes after the ignition switch is turned to LOCK (0); otherwise, the system may fail in a collision, or the airbags may deploy.
- SRS electrical connectors are identified by yellow color coding. Related components are located in the steering column, center console, dashboard, driver's dashboard lower cover, in the dashboard above the glove box, in the front seats, in the roof side, and around the floor. Do not use electrical test equipment on these circuits.

HONDA

Driving Support

Driving Support

Special Tools 25-2

Adaptive Cruise Control (ACC) System

Component Location Index 25-3
General Troubleshooting Information 25-5
DTC Troubleshooting Index 25-8
Symptom Troubleshooting Index 25-11
System Description 25-12
Circuit Diagram 25-18
DTC Troubleshooting 25-20
Adaptive Cruise Control (ACC) System Troubleshooting (No DTC Indication) 25-74
Symptom Troubleshooting 25-79
Millimeter Wave Radar Removal/Installation 25-82
Cruise Control Combination Switch Test 25-84
Cruise Control Combination Switch Replacement 25-85
Distance Switch Test 25-85
Adaptive Cruise Control (ACC) Unit Removal/Installation 25-86
Millimeter Wave Radar Aiming 25-87
Brake Fluid Pressure Sensor Replacement 25-93

Collision Mitigation Brake System (CMBS)

Component Location Index 25-94
General Troubleshooting Information 25-96
DTC Troubleshooting Index 25-99
Symptom Troubleshooting Index 25-101
System Description 25-102
Circuit Diagram 25-107
DTC Troubleshooting 25-109
Symptom Troubleshooting 25-116
CMBS OFF Switch Test/Replacement 25-116

Special Tools

Ref. No.	Tool Number	Description	Qty
①	070AJ-SDA0101	Radar Aimer Set	1

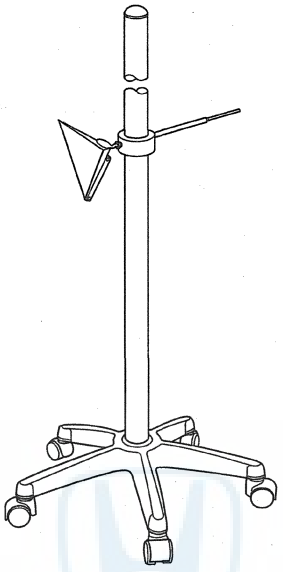

Component Location Index

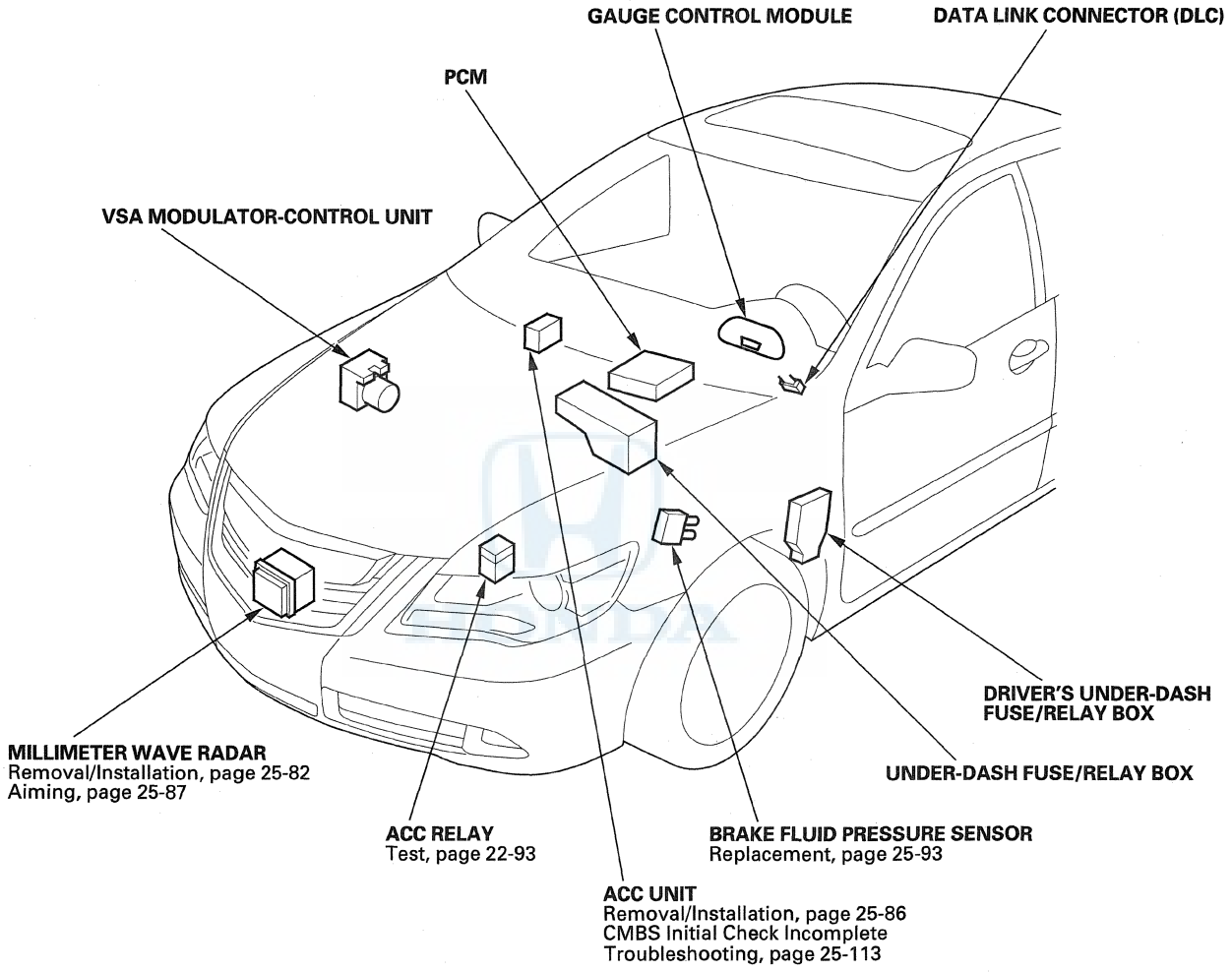

(cont'd)

Component Location Index (cont'd)

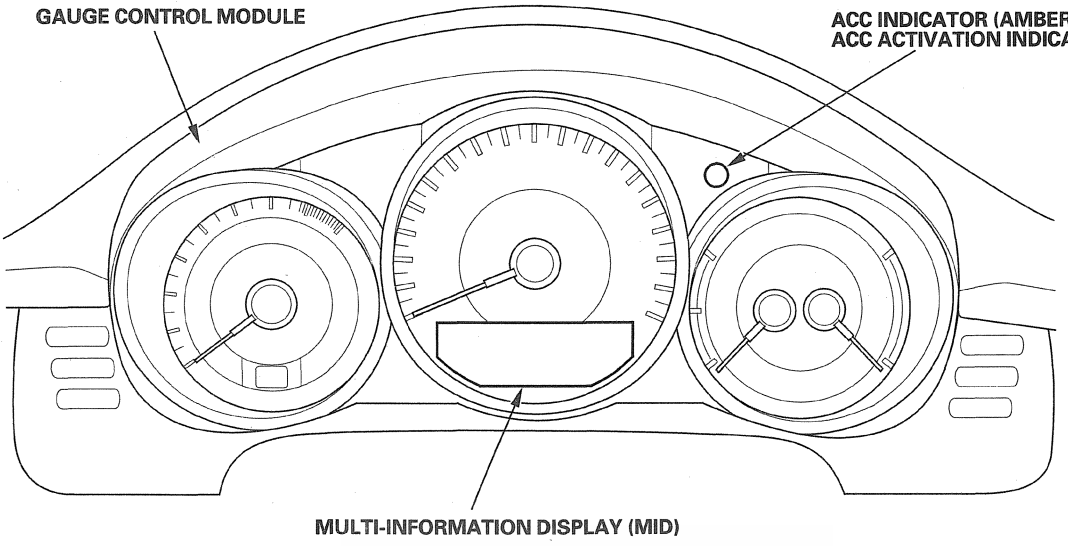

CRUISE CONTROL COMBINATION SWITCH (SET/RESUME/CANCEL/ACC SWITCH)
Test, page 25-84
Replacement, page 25-85

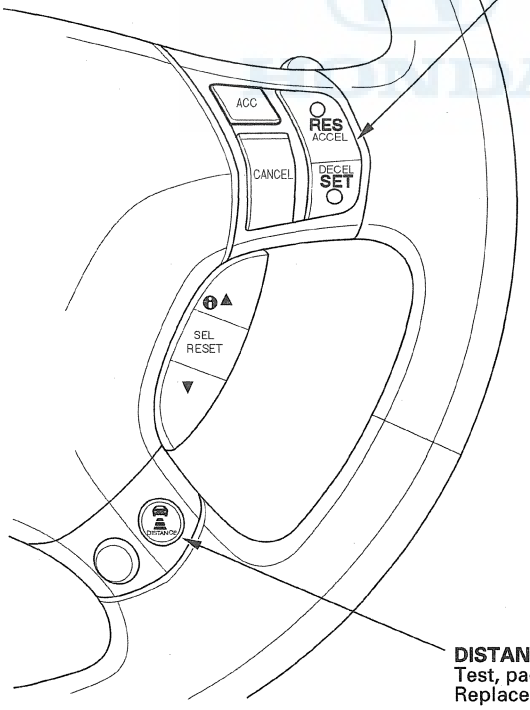

DISTANCE SWITCH
Test, page 25-85
Replacement, page 25-85

General Troubleshooting Information

Adaptive Cruise Control (ACC) Indicator (Amber)

When the ACC system is OK, the ACC indicator comes on for about 2 seconds after turning the ignition switch to ON (II), then it goes off.

When the ACC system detects a problem while in operation, the ACC system stops control, and the ACC indicator changes from green to amber and stays on.

NOTE: The ACC system is communicating with the PCM, the VSA system, and the gauge control module by F-CAN. If a connected unit malfunctions, the ACC system does not operate. In this case, both the ACC indicator and the connected unit indicator come on and stay on (except the gauge control module).

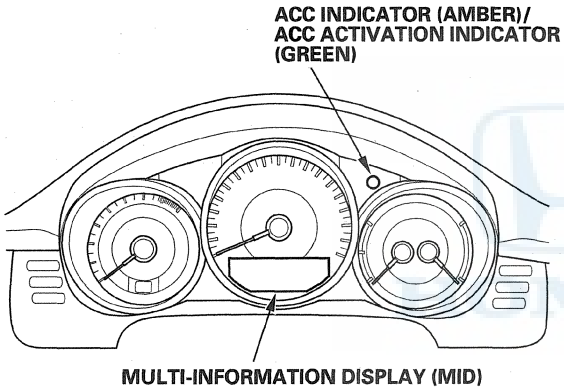

Adaptive Cruise Control (ACC) Indicator (Green)

If the ACC system is normal, the indicator comes on when the ACC switch is ON, and goes off when the ACC switch is OFF. If the ACC system malfunctions, the indicator color changes from green to amber, and stays on.

Self-diagnostic Function

The ACC system has a self-diagnostic function. If the self-diagnostic function detects a malfunction, the ACC system stops control, turns on the ACC indicator (Amber), and stores DTCs.

Multi-information Display (MID) Indication

If the ACC system is normal, the ACC indicates its operation on the multi-information display (MID) when the ACC switch is ON.

ACC Unit

The ACC unit uses input from the millimeter wave radar to control the vehicle's speed and brakes to maintain a constant distance between the vehicle and other moving vehicles directly ahead.

Millimeter Wave Radar

The millimeter wave radar recognizes the position of the moving vehicle ahead and detects the two vehicles speed differential.
The ACC unit receives this information from the millimeter wave radar.
The millimeter wave radar also detects its own errors, and it signals the ACC unit if an error is detected.

CAN Communication

The ACC unit is on the F-CAN, and it communicates with other units (AcuraLink, gauge control module, navigation, steering angle sensor, PCM, SH-AWD, SRS, and VSA) via the F-CAN.

If the ACC unit detects a communication error or a malfunction in another connected unit, the ACC system will not operate even though it is OK.
In this case, both the ACC indicator and the related unit indicator will come on and stay on.

Millimeter Wave Radar Aiming

If the millimeter wave radar is removed or replaced, do the millimeter wave radar aiming procedure. If the aiming is incomplete, the ACC indicator comes on.

(cont'd)

General Troubleshooting Information (cont'd)

How to Troubleshoot DTCs

Check the DTCs with the HDS. Make a copy of the freeze data, then clear the DTC.
Before troubleshooting, check and note these items:

- Ask the client about the conditions when the problem occurred, and try to reproduce the same conditions for troubleshooting.
- If the symptom does not appear and the ACC indicator does not come on during the test-drive, but troubleshooting is done based on the DTC, check for poor connections or loose terminals at all connectors related to the circuit that you are troubleshooting.
- After the troubleshooting or repairs are done, clear the DTCs, and test-drive the vehicle under the same conditions as when the DTC was originally set. Make sure the ACC indicator does not come on.
- The ACC system sometimes stops control because of the environment (weather, road conditions, driving conditions, etc.). A DTC may be stored in these cases.

DTCs may be stored even when the system is normal:

ACC indicator does not go on

DTC 83: Millimeter Wave Radar Detection Unstable
Driving behind a target vehicle that caused unstable reception.

DTC 84: Target vehicle comes closer than the millimeter wave radar detecting limits
The target vehicle brakes suddenly, etc.

DTC 85: Extensive driving on a rough or winding road, or VSA system malfunction

DTC 86: Abnormal tire pressure
Abnormal tire pressure, flat tire.

DTC 87: Adaptive cruise control (ACC) brake control temporarily prohibited
ACC brake works continuously, or ACC brake control is temporarily prohibited by a communication line error detected between the ACC unit and VSA modulator-control unit.

DTC 88: Millimeter wave radar out of detection area
Millimeter wave radar temperature is too high, millimeter wave radar supply voltage is too low, or out of detection condition.

DTC 89: Front wheel spin

DTC 91: Vehicle skidded, spun out, or abrupt steering wheel movements

DTC 93: Front tire problem
Different diameter of tires, flat tire, or large air pressure differential.

DTC 94: Rear tire problem
Different diameter of tires, flat tire, or large air pressure differential.

DTC 95: Power supply voltage too high

DTC 96: Power supply voltage too low

DTC 99: Acceleration/deceleration abnormality
Detects acceleration or deceleration that is out of the normal system operating range.

DTC 101: Rear wheel locked
Driving with the parking brake applied, or the parking brake stuck.

How to Retrieve DTCs

1. With the ignition switch in LOCK (0), connect the HDS to the data link connector (DLC) (A) under the left side of the dashboard.

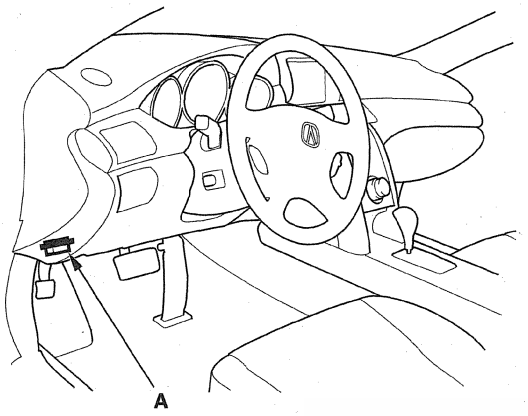

2. Turn the ignition switch to ON (II).
3. Make sure the HDS communicates with the vehicle and the ACC unit. If it does not communicate, troubleshoot the DLC circuit (see page 11-211).
4. Follow the prompts on the HDS to display the DTC(s) on the screen. After determining the DTC, refer to the DTC Troubleshooting.

   NOTE:
   - See the HDS Help menu for specific instructions.
   - Before troubleshooting, always verify that you have the latest version of the HDS software.

How to Clear DTCs

NOTE: You cannot clear the DTCs manually.

1. With the ignition switch in LOCK (0), connect the HDS to the data link connector (DLC) (A) under the left side of the dashboard.

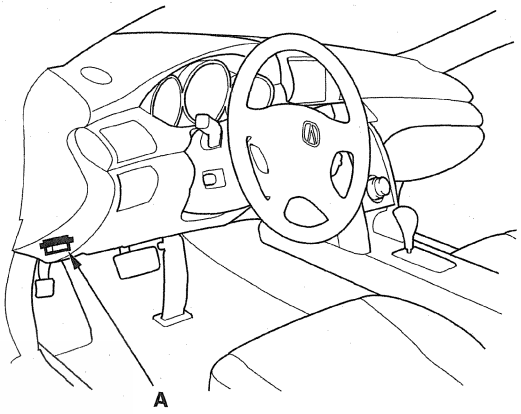

2. Turn the ignition switch to ON (II).
3. Make sure the HDS communicates with the vehicle and the ACC unit. If it does not communicate, troubleshoot the DLC circuit (see page 11-211).
4. Clear the DTC(s) by following the screen prompts on the HDS.

   NOTE: See the HDS Help menu for specific instructions.

DTC Troubleshooting Index

DTC	Detection Item	Adaptive Cruise Control (ACC) Indicator	Page
10	Vehicle speed signal error	ON	(see page 25-20)
11	Left rear wheel speed sensor signal error	ON	(see page 25-20)
12	Right rear wheel speed sensor signal error	ON	(see page 25-20)
13	Left front wheel speed sensor signal error	ON	(see page 25-20)
14	Right front wheel speed sensor signal error	ON	(see page 25-20)
21	Yaw rate sensor error	ON	(see page 25-21)
22	Yaw rate sensor center position revision value error	ON	(see page 25-21)
23	Yaw rate sensor gain error	ON	(see page 25-21)
25	Yaw rate sensor stabilizing malfunction	ON	(see page 25-23)
30	Adaptive cruise control (ACC) relay circuit malfunction	ON	(see page 25-24)
43	Cal FL brake system malfunction	ON	(see page 25-30)
44	Cal FL brake fluid pressure sensor circuit open/short	ON	(see page 25-33)
45	Cal FL brake fluid pressure sensor center position error	ON	(see page 25-37)
46	Cal FL brake fluid pressure sensor malfunction	ON	(see page 25-41)
47	Cal FR brake system malfunction	ON	(see page 25-45)
48	Cal FR brake fluid pressure sensor circuit open/short	ON	(see page 25-47)
49	Cal FR brake fluid pressure sensor center position error	ON	(see page 25-51)
50	Cal FR brake fluid pressure sensor malfunction	ON	(see page 25-55)

NOTE: For CMBS DTCs, refer to the DTC troubleshooting index of the CMBS section.

DTC	Detection Item	Adaptive Cruise Control (ACC) Indicator	Page
60	Communication line error	ON	(see page 25-59)
61	Millimeter wave radar communication error	ON	(see page 25-60)
62	Millimeter wave radar sensor error	ON	(see page 25-62)
63	Millimeter wave radar aiming error	ON	(see page 25-63)
73	Variation failure of the PCM	———	(see page 25-64)
81	Engine control system (including PCM) malfunction	———	(see page 25-65)
83	Millimeter wave radar detection unstable	———	(see page 25-6)
84	Target vehicle comes closer than the millimeter wave radar detecting limits	———	(see page 25-6)
85	Extensive driving on a rough or winding road, or VSA system malfunction	———	(see page 25-6)
86	Abnormal tire pressure	———	(see page 25-6)
87	Adaptive cruise control (ACC) brake control temporarily prohibited	———	(see page 25-6)
88	Millimeter wave radar out of detection condition	———	(see page 25-6)
89	Front wheel spin	———	(see page 25-6)
90	A/T control system (including PCM) malfunction	———	(see page 25-65)
91	Vehicle skidded, spun out, or abrupt steering wheel movements	———	(see page 25-6)
92	VSA modulator-control unit malfunction	———	(see page 25-66)
93	Front tire problem	———	(see page 25-6)
94	Rear tire problem	———	(see page 25-6)
95	Power supply voltage too high	———	(see page 25-6)
96	Power supply voltage too low	———	(see page 25-6)
99	Acceleration/deceleration abnormality	———	(see page 25-6)

NOTE: For CMBS DTCs, refer to the DTC troubleshooting index of the CMBS section.

(cont'd)

DTC Troubleshooting Index (cont'd)

DTC	Detection Item	Adaptive Cruise Control (ACC) Indicator	Page
100	CMBS initial check incomplete	ON	(see page 25-113)
101	Left rear wheel locked	———	(see page 25-6)
105	Dust or dirt on the millimeter wave radar	———	(see page 25-66)
107	Millimeter wave radar aiming incomplete	ON	(see page 25-67)
110	Lost communication with the PCM (PGM-FI system)	———	(see page 25-68)
111	Lost communication with the PCM (A/T system)	———	(see page 25-68)
112	Lost communication with the VSA modulator-control unit	———	(see page 25-69)
113	Lost communication with the gauge control module	———	(see page 25-71)
115	Lost communication with the SH-AWD control unit	———	(see page 25-72)
120	Two or more aiming targets exist	———	Refer to the DTCs (if the aiming procedure is incomplete) (see page 25-92)
121	The width of the aiming target is out of specification	———	Refer to the DTCs (if the aiming procedure is incomplete) (see page 25-92)
122	The distance of the aiming target is out of specification	———	Refer to the DTCs (if the aiming procedure is incomplete) (see page 25-92)
123	The aiming target is moved	———	Refer to the DTCs (if the aiming procedure is incomplete (see page 25-92)
124	The right and left position of the aiming target is out of specification	———	Refer to the DTCs (if the aiming procedure is incomplete) (see page 25-92)

NOTE: For CMBS DTCs, refer to the DTC troubleshooting index of the CMBS section.

Symptom Troubleshooting Index

NOTE: The adaptive cruise control system is cancelled when the VSA system is activated.

Symptom	Diagnostic procedure	Also check for
Vehicle speed can be set, but there is no adaptive cruise control (ACC) indication on the MID	Do the gauge control module self-diagnostic function (see page 22-396).	
Vehicle speed cannot be set when the SET switch is pressed (between 25 mph (40 km/h) and 90 mph (145 km/h))	1. Test the cruise control combination switch (see page 25-84). 2. Test the transmission range switch (see page 14-244). 3. Test the brake pedal position switch (see page 22-227). 4. Check for a short in the SCS line.	• Blown No. 4 (15 A) or No. 13 (15 A) fuse in the under-hood fuse/relay box • An open in the wire • A short in the wire • The system is in service mode
Vehicle speed does not decelerate or accelerate accordingly when the set/resume switch is pressed	Test the cruise control combination switch (see page 25-84).	A short in the wire
Set speed does not cancel when the shift lever is in position N	Test the transmission range switch (see page 14-244).	An open in the wire
Set speed does not cancel when the brake pedal is pressed	Test the brake pedal position switch (see page 22-227).	An open in the wire
Set speed does not cancel when the adaptive cruise control (ACC) switch is turned off	Test the cruise control combination switch (see page 25-84).	A short in the wire
Set distance cannot be adjusted with the distance switch	Test the distance switch (see page 25-85).	
Vehicle speed can be set, but vehicle speed decelerates	Check for DTCs in the PGM-FI system with the HDS (see page 11-3).	Faulty ETCS
Senses a vehicle driving in another lane	Do the adaptive cruise control (ACC) system check (see step 7 on page 25-74).	• Incorrect millimeter wave radar alignment • Wheel alignment
Does not sense the vehicle driving ahead	Do the adaptive cruise control (ACC) system check (see step 11 on page 25-75).	• Out of the performance limits • Wheel alignment • Undetectable environment • Dirty radar lens
Intermittently senses the vehicle driving ahead	Do the adaptive cruise control (ACC) system check (see step 12 on page 25-75).	• Incorrect millimeter wave radar alignment • Wheel alignment • Undetectable environment • Dirty radar lens
Adaptive cruise control (ACC) indicator (amber) does not come on	Symptom Troubleshooting (see page 25-79)	
Adaptive cruise control (ACC) indicator (amber) does not go off	Symptom Troubleshooting (see page 25-80)	
Adaptive cruise control (ACC) activation indicator (green) does not come on	Symptom Troubleshooting (see page 25-81)	
Adaptive cruise control (ACC) activation indicator (green) does not go off	Symptom Troubleshooting (see page 25-82)	

Adaptive Cruise Control (ACC)

System Description

The adaptive cruise control (ACC) system automatically controls the vehicle speed, within the set speed, to maintain a safe distance to the vehicle ahead.

Operation Criteria

- When there is no vehicle ahead, the ACC maintains the set speed.
- When there is a vehicle ahead, the ACC maintains a set distance within the set speed.
- If the vehicle ahead pulls over out of the way, the ACC accelerates the vehicle to the set speed and maintains that speed.
- The ACC measures the distance from the vehicle ahead using the millimeter wave radar, and it determines if the target vehicle driving ahead is in the same lane by using inputs from the vehicle speed sensor and the yaw rate sensor.
- If the ACC detects a slow vehicle and the distance to the vehicle ahead is closing, the vehicle speed is reduced primarily by closing the throttle, and additional slowing is accomplished by using the brakes. If the vehicle ahead is too close, an alarm sounds.
- If a slower vehicle ahead accelerates, the throttle is opened to accelerate the vehicle (up to the set speed) to maintain the following distance.

Basic ACC Pattern

- Radar detection: Max. 0.06 mile (100 m) ahead in a 16 degree field of view
- Vehicle operating speed: 25—90 mph (40—145 km/h)

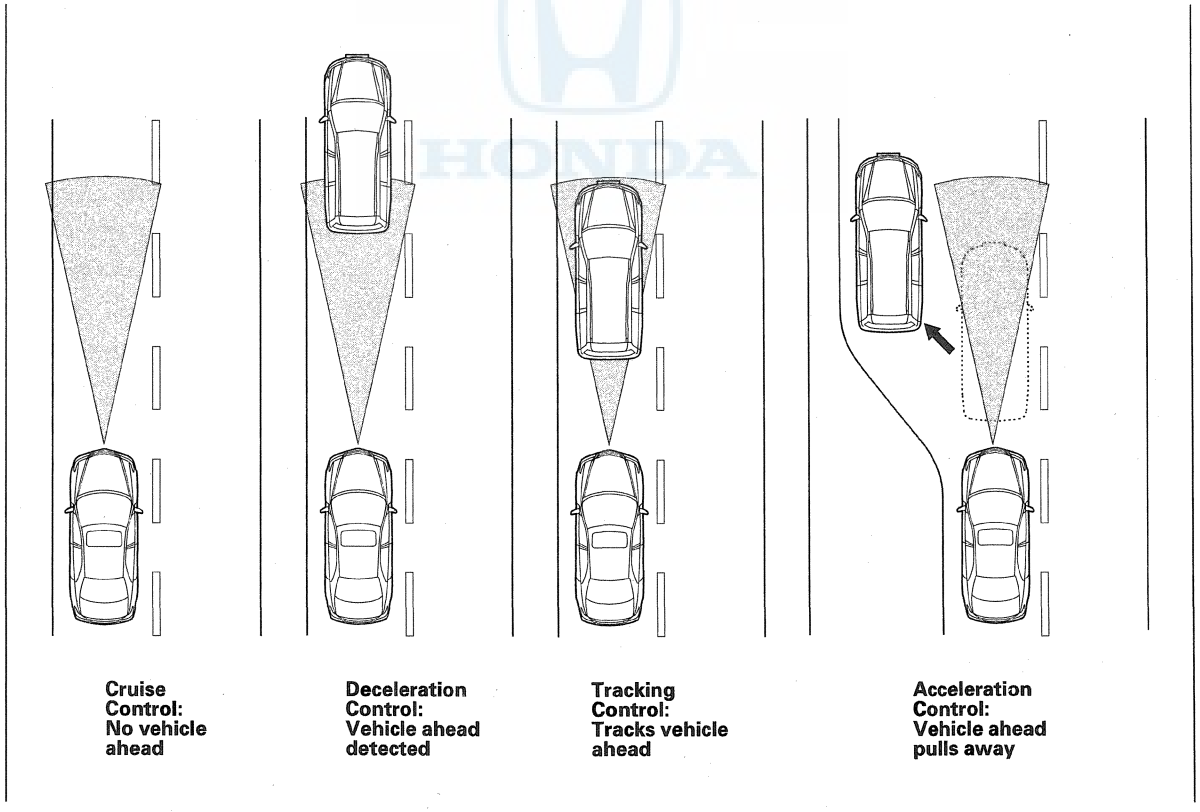

ACC Unit

The ACC unit obtains information from external sensors and switches that are connected to their respective control units.

ACC Operation Range:
- Setting speed range is 25—90 mph (20—145 km/h)
- Setting following distance from vehicle ahead is 1.0—2.0 seconds
- Maximum deceleration is 0.30 G

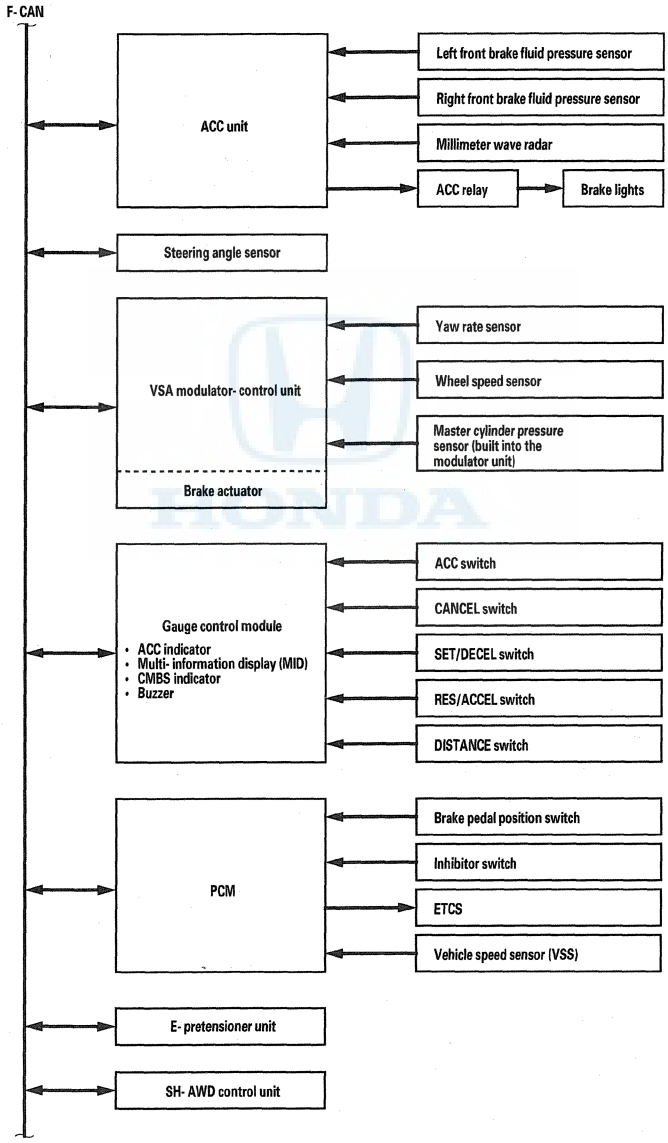

(cont'd)

System Description (cont'd)

Millimeter Wave Radar

The millimeter wave radar is installed on the main bracket attached to the front bulkhead. The main bracket allows the radar angle to be adjusted ±3 degrees vertically by moving the main bracket adjusters.

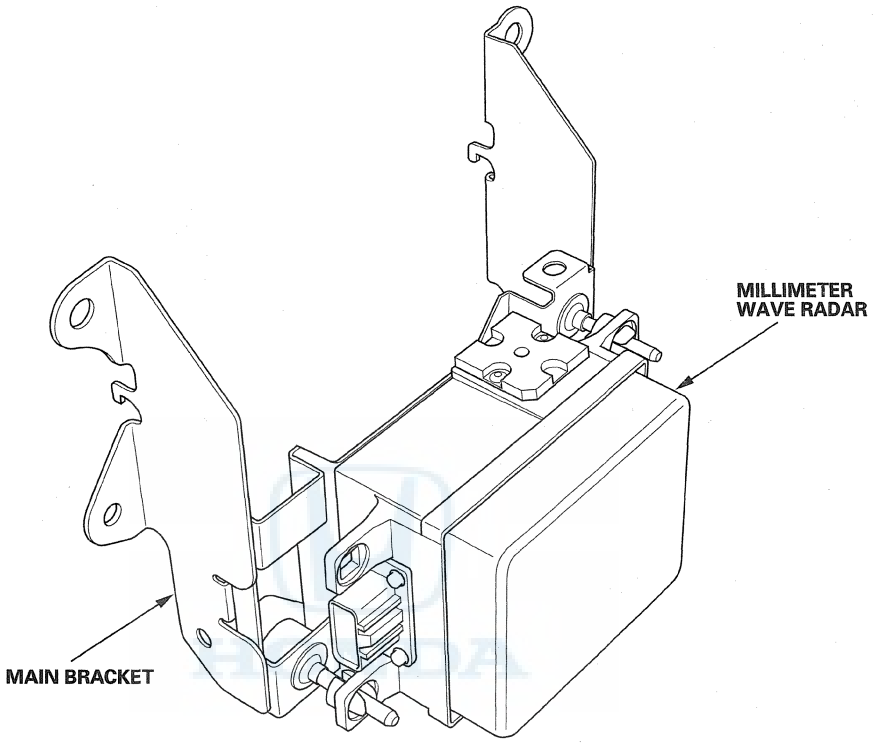

The millimeter wave radar has these functions:

Basic distance function
The millimeter wave radar radiates 76—77 GHz radar waves up to a range of 100 m (328 ft) ahead, 16 degrees horizontally, 3.9 degrees vertically, and it receives the reflected waves. In doing so, it can calculate the distance to the vehicle ahead, the relative speed (the difference in speed between the two vehicles), and its position. This data is sent to the ACC unit.

Aiming function
The millimeter wave radar has a horizontal auto-aiming function range of ±3 degrees and is directed by ACC unit.

Self-diagnosis function
The millimeter wave radar has a self-diagnostic function, it sends this information to the ACC unit.

Sensitivity-lowering detection function
When the detecting performance of the radar is deteriorated by dirt, dust, or other contaminants, it signals the condition malfunction to the ACC unit until the performance is restored.

Adjuster-misalignment detection function
When more than ±5 degrees of adjuster misalignment is detected while driving, it signals the condition to the ACC unit.

Brake Fluid Pressure Sensor

The brake fluid pressure sensors are installed in the right and left sides of the brake line 4-way joint. The brake fluid pressure is converted to a signal (voltage value) and is output to the ACC unit. The ACC unit is always monitoring the ACC brake operation and the brake pressure controlled by the signal sent from the brake fluid pressure sensor.

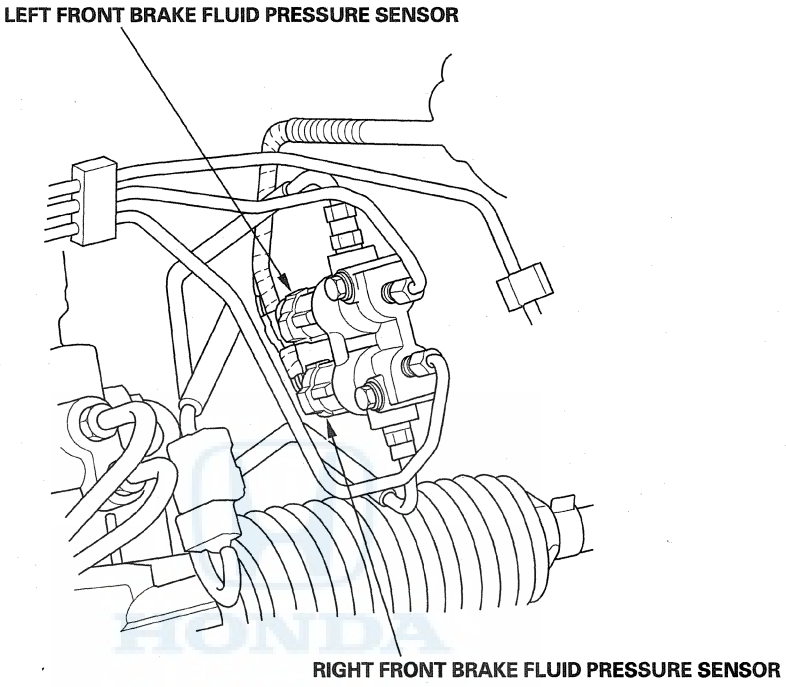

(cont'd)

System Description (cont'd)

Adaptive Cruise Control (ACC) Unit Inputs and Outputs

ACC UNIT 20P CONNECTOR

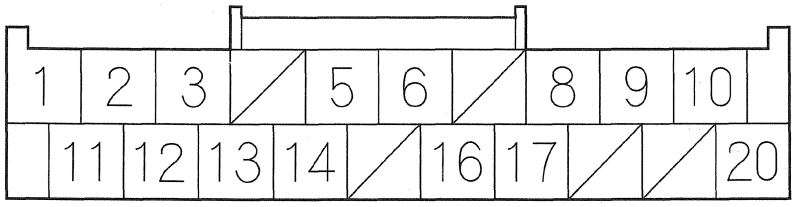

Wire side of female terminals

Terminal number	Wire color	Terminal sign	Terminal name	Description	Signal
1	RED	BRK DIAG	Brake diagnosis	Detects ACC relay	ACC brake operated or brake pedal pressed: battery voltage
2	BLU	IG1	Ignition signal	Detects ignition signal	Ignition switch ON (II): battery voltage Ignition switch LOCK (0): about 0 V
3	GRN	SG	Sensor ground	Brake fluid pressure sensor ground	——
5	RED	VCC	Voltage constant current	Provides brake fluid pressure sensor voltage	Ignition switch ON (II): about 5 V Ignition switch LOCK (0): about 0 V
6	BLU	PRESS FR	Pressure front right	Detects the brake fluid pressure signal of the right front brake caliper	Ignition switch ON (II): about 0.5—4.5 V Ignition switch LOCK (0): about 0 V
8	BLU	K-LINE	Data link	Sends and receives scan tool signal	——
9	BLK	PG	Power ground	Ground circuit for the ACC system	——
10	WHT	CANH	CAN High line	F-CAN communication (high) circuit	——
11	BLK	LG1	Logic ground 1	Ground circuit for the ACC system	——
12	BLK	LG2	Logic ground 2	Ground circuit for the ACC system	——
13	WHT	VBU	Back-up voltage	Provides DTC memory voltage	Battery voltage
14	PNK	PRESS FL	Pressure front left	Detects the brake fluid pressure signal of the left front brake caliper	Ignition switch ON (II): about 0.5—4.5 V Ignition switch LOCK (0): about 0 V
16	BLU	BRK LAMP	Brake light	Drives the ACC relay	Ignition switch ON (II): battery voltage Ignition switch LOCK (0): about 0 V
17	WHT	M/R TRX	Millimeter wave radar data link	Communicates with the millimeter wave radar	Ignition switch ON (II): battery voltage Ignition switch LOCK (0): about 0 V
20	RED	CANL	CAN Low line	F-CAN communication (low) circuit	——

Millimeter Wave Radar Inputs and Outputs

MILLIMETER WAVE RADAR 5P CONNECTOR

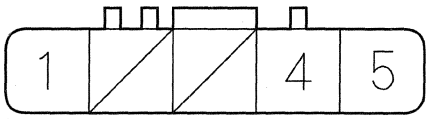

Wire side of female terminals

Terminal number	Wire color	Terminal sign	Terminal name	Description	Signal
1	BLU	IG1	Ignition signal	Power supply for millimeter wave radar	Ignition switch ON (II): battery voltage Ignition switch LOCK (0): about 0 V
4	BLK	GND	Ground	Ground for millimeter wave radar	—
5	WHT	M/R TRX	Millimeter wave radar data link	Communicates with the ACC unit	Ignition switch ON (II): battery voltage Ignition switch LOCK (0): about 0 V

HONDA

Adaptive Cruise Control (ACC)

Circuit Diagram

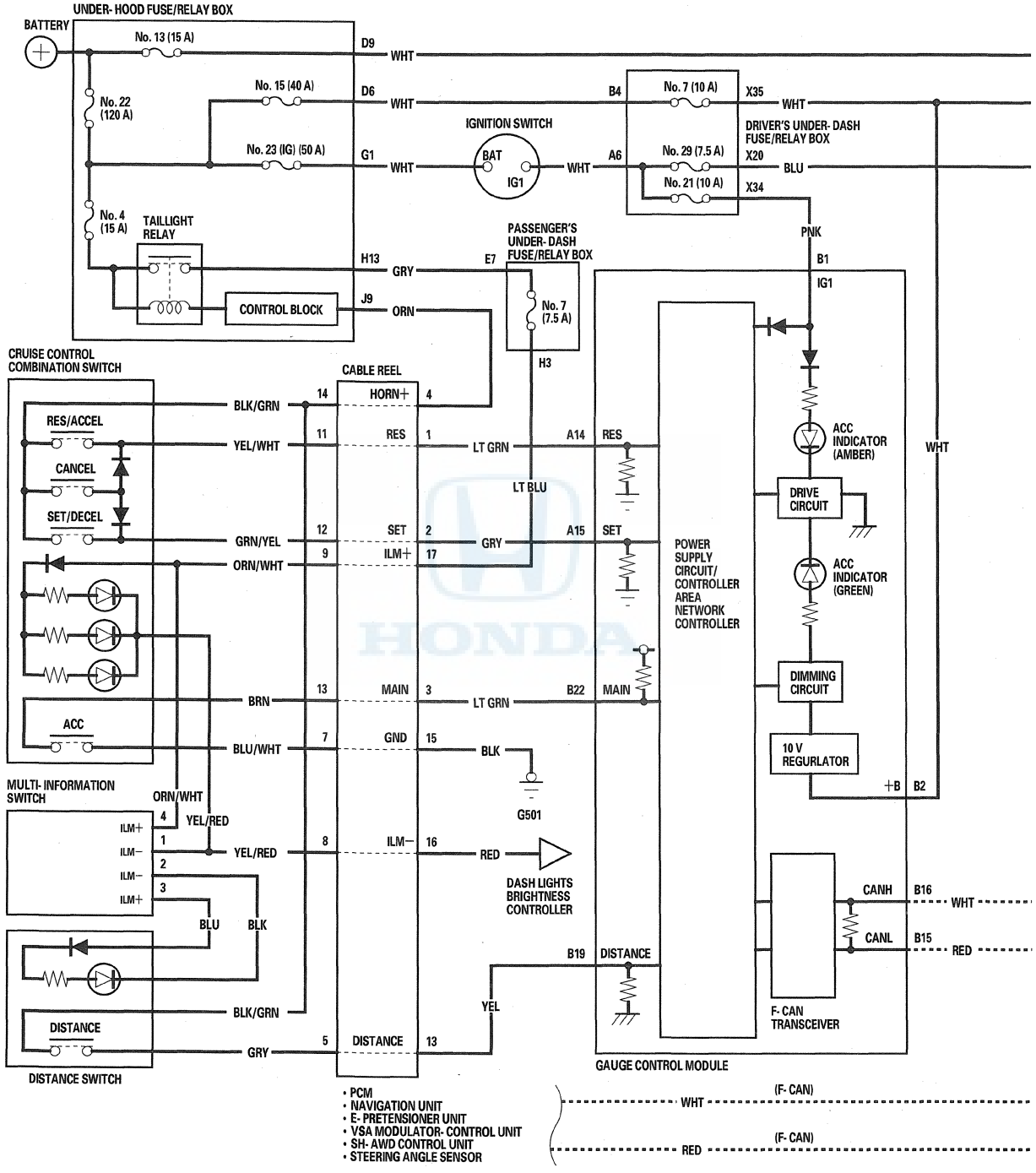

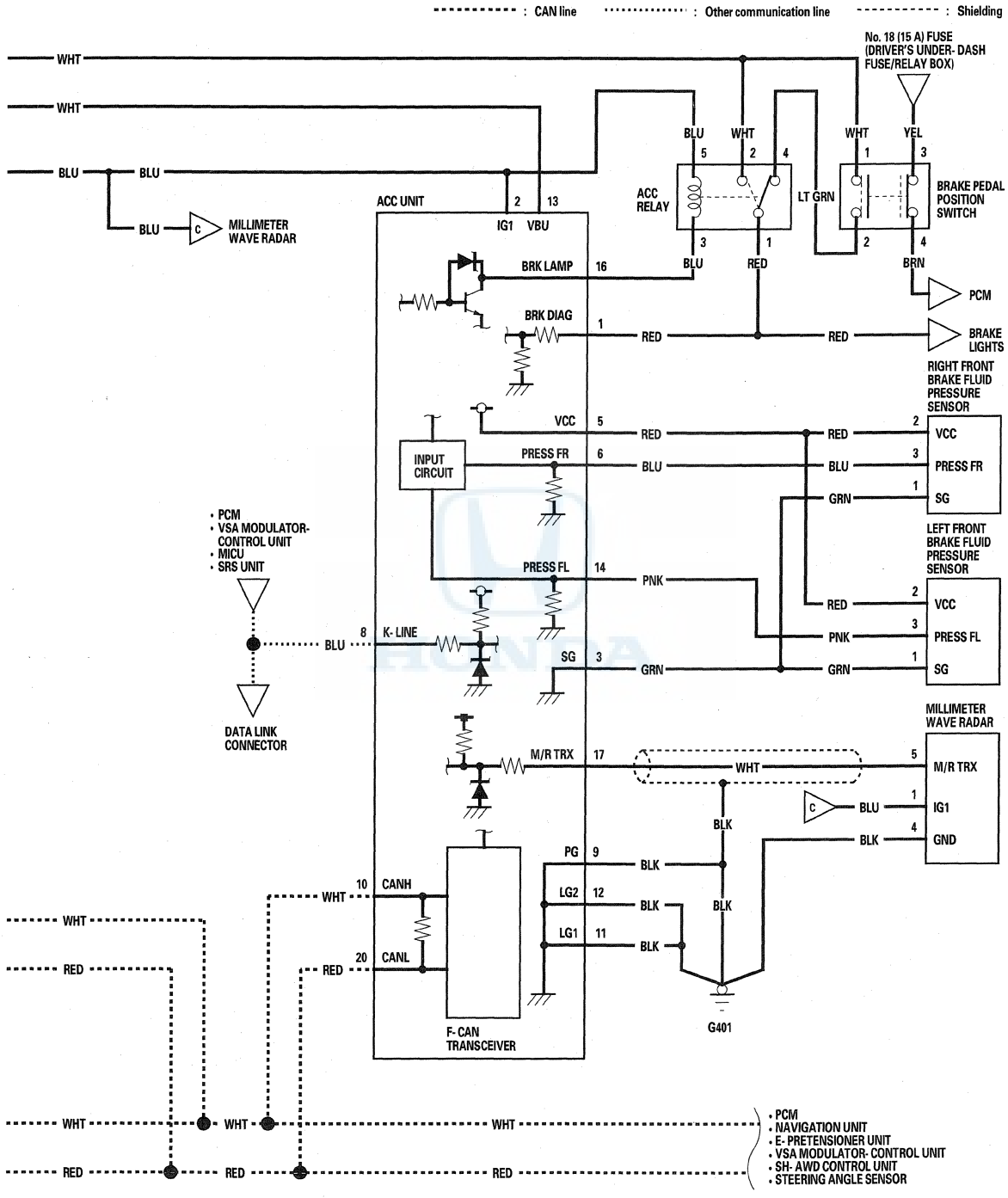
: CAN line
: Other communication line
: Shielding
No. 18 (15 A) FUSE (DRIVER'S UNDER- DASH FUSE/RELAY BOX)
WHT
WHT
BLU
BLU
BLU
C
MILLIMETER WAVE RADAR
ACC UNIT
2
13
IG1
VBU
ACC RELAY
BLU
WHT
WHT
YEL
5
2
4
1
3
LT GRN
BRAKE PEDAL POSITION SWITCH
3
1
2
4
BLU
RED
BRN
PCM
BRK LAMP
16
BRK DIAG
1
RED
RED
BRAKE LIGHTS
RIGHT FRONT BRAKE FLUID PRESSURE SENSOR
VCC
5
RED
RED
2
VCC
INPUT CIRCUIT
PRESS FR
6
BLU
BLU
3
PRESS FR
GRN
1
SG
PCM
VSA MODULATOR- CONTROL UNIT
MICU
SRS UNIT
LEFT FRONT BRAKE FLUID PRESSURE SENSOR
PRESS FL
14
PNK
RED
2
VCC
PNK
3
PRESS FL
8
K- LINE
BLU
SG
3
GRN
GRN
1
SG
DATA LINK CONNECTOR
MILLIMETER WAVE RADAR
M/R TRX
17
WHT
5
M/R TRX
C
BLU
1
IG1
BLK
BLK
4
GND
PG
9
BLK
10
CANH
WHT
LG2
12
BLK
BLK
WHT
LG1
11
BLK
20
CANL
RED
RED
F- CAN TRANSCEIVER
G401
WHT
WHT
WHT
RED
RED
RED
• PCM
• NAVIGATION UNIT
• E- PRETENSIONER UNIT
• VSA MODULATOR- CONTROL UNIT
• SH- AWD CONTROL UNIT
• STEERING ANGLE SENSOR

DTC Troubleshooting

DTC 10: Vehicle Speed Signal Error

NOTE: If DTC 110 and DTC 111 are stored at the same time as DTC 10, troubleshoot DTC 110 and DTC 111 first, then recheck for DTC 10.

1. Check for PGM-FI system DTCs with the HDS.

   Are any DTCs indicated?

   YES—Troubleshoot the indicated PGM-FI system DTC(s). ■

   NO—Go to step 2.

2. Check for VSA system DTCs with the HDS.

   Are any DTCs indicated?

   YES—Troubleshoot the indicated VSA system DTC(s). ■

   NO—Go to step 3.

3. Clear the DTCs with the HDS.

4. Test-drive the vehicle at 9 mph (15 km/h) or more with the adaptive cruise control (ACC) activated, and watch the ACC indicator.

   Does the ACC indicator come on?

   YES—Go to step 5.

   NO—Intermittent failure, the system is OK at this time. Check for loose or poor connections. ■

5. Check for DTCs with the HDS.

   Is DTC 10 indicated?

   YES—Check for loose or poor connections. If OK, replace the ACC unit (see page 25-86). ■

   NO—Troubleshoot the indicated DTC(s). ■

DTC 11: Left Rear Wheel Speed Sensor Signal Error

DTC 12: Right Rear Wheel Speed Sensor Signal Error

DTC 13: Left Front Wheel Speed Sensor Signal Error

DTC 14: Right Front Wheel Speed Sensor Signal Error

NOTE: If DTC 112 is stored at the same time as DTC 11, 12, 13, or 14, troubleshoot DTC 112 first, then recheck for DTC 11, 12, 13, or 14.

1. Check for VSA system DTCs with the HDS.

   Are any DTCs indicated?

   YES—Troubleshoot the indicated VSA system DTC(s). ■

   NO—Go to step 2.

2. Clear the DTCs with the HDS.

3. Test-drive the vehicle at 5 mph (8 km/h) or more with the adaptive cruise control (ACC) activated, and watch the ACC indicator.

   Does the ACC indicator come on?

   YES—Go to step 4.

   NO—Intermittent failure, the system is OK at this time. Check for loose or poor connections. ■

4. Check for DTCs with the HDS.

   Are DTC 11, 12, 13, or 14 indicated?

   YES—Check for loose or poor connections. If OK, replace the ACC unit (see page 25-86). ■

   NO—Troubleshoot the indicated DTC(s). ■

DTC 21: Yaw Rate Sensor Error

DTC 22: Yaw Rate Sensor Center Position Revision Value Error

NOTE: If DTC 112 is stored at the same time as DTC 21, troubleshoot DTC 112 first, then recheck for DTC 21 or DTC 22.

1. Check for VSA system DTCs with the HDS.

   Are any DTCs indicated?

   YES—Troubleshoot the indicated VSA system DTC(s). ■

   NO—Go to step 2.

2. Clear the DTCs with the HDS.
3. Turn the ignition switch to ON (II).
4. Watch the adaptive cruise control (ACC) indicator.

   Does the ACC indicator come on?

   YES—Go to step 5.

   NO—Intermittent failure, the system is OK at this time. Check for loose or poor connections. ■

5. Check for DTCs with the HDS.

   Is DTC 21 or DTC 22 indicated?

   YES—Go to step 6.

   NO—Troubleshoot the indicated DTC(s). ■

6. Check the YAW RATE SENSOR with the HDS.

   Is about 2.5 V indicated?

   YES—The yaw rate sensor signal is OK, check for loose or poor connections. If OK, replace the ACC unit (see page 25-86). ■

   NO—Go to the VSA system troubleshooting (see page 19-46). ■

DTC 23: Yaw Rate Sensor Gain Error

NOTE: If DTC 112 is stored at the same time as DTC 23, troubleshoot DTC 112 first, then recheck for DTC 23.

1. Check for VSA system DTCs with the HDS.

   Are any DTCs indicated?

   YES—Troubleshoot the indicated VSA system DTC(s). ■

   NO—Go to step 2.

2. Clear the DTCs with the HDS.
3. Start the engine.

(cont'd)

DTC Troubleshooting (cont'd)

4. Test-drive the vehicle at 11 mph (18 km/h) or more with the adaptive cruise control (ACC) activated, and watch the ACC indicator.

   Does the ACC indicator come on?

   YES—Go to step 5.

   NO—Intermittent failure, the system is OK at this time. Check for loose or poor connections. ■

5. Check for DTCs with the HDS.

   Is DTC 23 indicated?

   YES—Go to step 6.

   NO—Troubleshoot the indicated DTC(s). ■

6. Test-drive in a straight line at 12.4 mph (20 km/h) or more, and check the YAW RATE SENSOR with the HDS.

   Is about 2.5 V indicated?

   YES—Go to step 7.

   NO—Go to the VSA system troubleshooting (see page 19-46). ■

7. Turn right at 12.4 mph (20 km/h) or more, and check the YAW RATE SENSOR with the HDS.

   Does the voltage increase from 2.5 V?

   YES—Go to step 8.

   NO—Go to the VSA system troubleshooting (see page 19-46). ■

8. Turn left at 12.4 mph (20 km/h) or more, and check the YAW RATE SENSOR with the HDS.

   Does the voltage decrease from 2.5 V?

   YES—The yaw rate-lateral/longitudinal acceleration sensor signal is OK, check for loose or poor connections. If OK, replace the ACC unit (see page 25-86). ■

   NO—Go to the VSA system troubleshooting (see page 19-46). ■

DTC 25: Yaw Rate Sensor Stabilizing Malfunction

NOTE: If DTC 112 is stored at the same time as DTC 25, troubleshoot DTC 112 first, then recheck for DTC 25.

1. Check for VSA system DTCs with the HDS.

   Are any DTCs indicated?

   YES—Troubleshoot the indicated VSA system DTC(s). ■

   NO—Go to step 2.

2. Clear the DTCs with the HDS.

3. Test-drive the vehicle at 28 mph (45 km/h) or more with the adaptive cruise control (ACC) activated, and watch the ACC indicator.

   Does the ACC indicator come on?

   YES—Go to step 4.

   NO—Intermittent failure, the system is OK at this time. Check for loose or poor connections. ■

4. Check for DTCs with the HDS.

   Is DTC 25 indicated?

   YES—Go to step 5.

   NO—Troubleshoot the indicated DTC(s). ■

5. Test-drive the vehicle in a straight line with the ACC activated, check the YAW RATE SENSOR with the HDS.

   Is about 2.5 V indicated?

   YES—Go to step 6.

   NO—Go to the VSA system troubleshooting (see page 19-46). ■

6. Turn right with the ACC activated, and check the YAW RATE SENSOR with the HDS.

   Does the voltage increase from 2.5 V?

   YES—Go to step 7.

   NO—Go to the VSA system troubleshooting (see page 19-46). ■

7. Turn left with the ACC activated, and check the YAW RATE SENSOR with the HDS.

   Does the voltage decrease from 2.5 V?

   YES—The yaw rate-lateral/longitudinal acceleration sensor signal is OK, check for loose or poor connections. If OK, replace the ACC unit (see page 25-86). ■

   NO—Go to the VSA system troubleshooting (see page 19-46). ■

HONDA

DTC Troubleshooting (cont'd)

DTC 30: Adaptive Cruise Control (ACC) Relay Circuit Malfunction

1. Check the brake lights without pressing the brake pedal.

   Are the brake lights off?

   YES—Go to step 10.

   NO—Go to step 2.

2. Check the brake pedal height and adjust it (see page 19-6).

3. Check the brake lights without pressing the brake pedal.

   Are the brake lights off?

   YES—Intermittent failure, the system is OK at this time. Check for loose or poor connections. ■

   NO—Go to step 4.

4. Test the brake pedal position switch (see page 22-227).

   Is the brake pedal position switch OK?

   YES—Go to step 5.

   NO—Adjust or replace the brake pedal position switch and recheck (see page 19-37). ■

5. Test the ACC relay (see page 22-93).

   Is the relay OK?

   YES—Go to step 6.

   NO—Replace the relay and recheck. ■

6. Disconnect the brake pedal position switch 4P connector.

7. Measure the voltage between brake pedal position switch 4P connector terminal No. 2 and body ground.

BRAKE PEDAL POSITION SWITCH 4P CONNECTOR

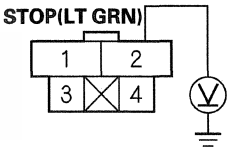

Wire side of female terminals

Is there battery voltage?

YES—Repair a short to power in the wire. ■

NO—Go to step 8.

8. Disconnect the ACC unit 20P connector.

9. Measure the voltage between ACC unit 20P connector terminal No. 1 and body ground.

ACC UNIT 20P CONNECTOR

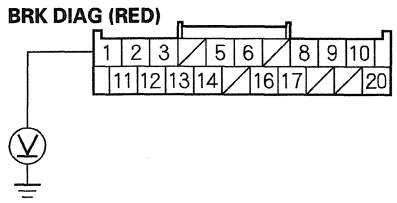

Wire side of female terminals

Is there battery voltage?

YES—Repair a short to power in the wire between the ACC unit and the ACC relay, or between the ACC unit and the brake lights circuits. ■

NO—Check for loose or poor connections. If OK, replace the ACC unit (see page 25-86). ■

10. Clear the DTCs with the HDS.
11. Turn the ACC switch ON.
12. Check the brake lights with the brake pedal pressed.

Do the brake lights come on?

YES—Go to step 13.

NO—Go to step 37.

13. Check for DTCs with the HDS.

Is DTC 30 indicated?

YES—Go to step 14.

NO—Go to step 20.

14. Turn the ignition switch to LOCK (0).
15. Remove the ACC relay.
16. Disconnect the ACC unit 20P connector.
17. Disconnect the brake pedal position switch 4P connector.
18. Check for continuity between the ACC unit 20P connector No. 1 terminal and body ground.

ACC UNIT 20P CONNECTOR

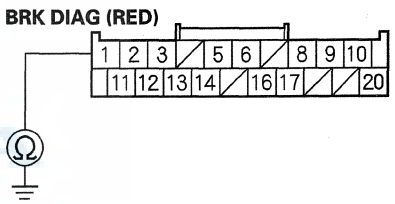

Wire side of female terminals

Is there continuity?

YES—Repair a short to ground in the wire between the ACC unit and the ACC relay. ■

NO—Go to step 19.

(cont'd)

DTC Troubleshooting (cont'd)

19. Check for continuity between ACC unit 20P connector terminal No. 1 and ACC relay 5P connector terminal No. 1.

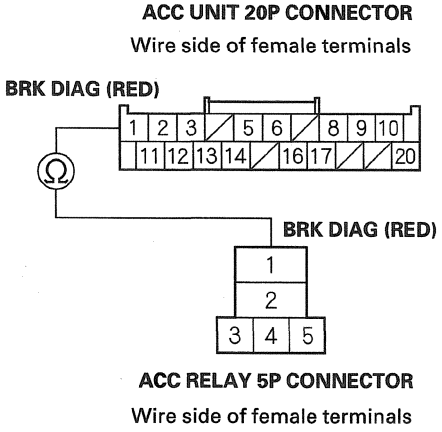

Is there continuity?

YES—Check for loose or poor connections. If OK, replace the ACC unit (see page 25-86). ■

NO—Repair an open in the wire between the ACC unit and the ACC relay. ■

20. Test the ACC relay (see page 22-93).

Is the relay OK?

YES—Go to step 21.

NO—Replace the relay and recheck. ■

21. Remove the ACC relay.

22. Measure the voltage between ACC relay 5P connector terminal No. 2 and body ground.

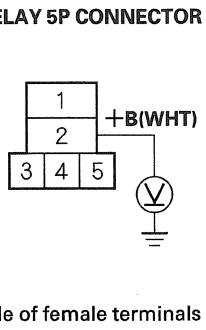

Is there battery voltage?

YES—Go to step 23.

NO—Repair an open in the wire between the No. 13 (15 A) fuse in the under-hood fuse/relay box and the ACC relay. ■

23. Turn the ignition switch to ON (II).

24. Measure the voltage between ACC relay 5P connector terminal No. 5 and body ground.

ACC RELAY 5P CONNECTOR

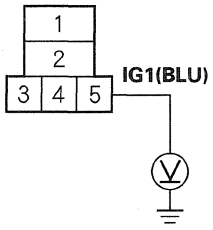

Wire side of female terminals

Is there battery voltage?

YES—Go to step 25.

NO—Repair an open in the wire between the No. 29 (7.5 A) fuse in the under-dash fuse/relay box and the ACC relay. ■

25. Turn the ignition switch to LOCK (0).

26. Disconnect the ACC unit 20P connector.

27. Check for continuity between ACC unit 20P connector terminal No. 16 and body ground.

ACC UNIT 20P CONNECTOR

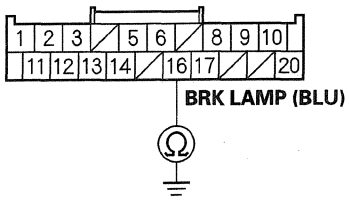

Wire side of female terminals

Is there continuity?

YES—Repair a short to ground in the wire between the ACC unit and the ACC relay. ■

NO—Go to step 28.

(cont'd)

DTC Troubleshooting (cont'd)

28. Check for continuity between ACC unit 20P connector terminal No. 16 and ACC relay 5P connector terminal No. 3.

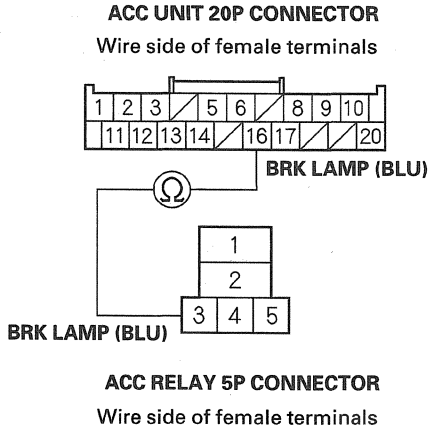

Is there continuity?

YES—Go to step 29.

NO—Repair an open in the wire between the ACC unit and the ACC relay. ■

29. Install the ACC relay.
30. Reconnect the ACC unit 20P connector.
31. Clear the DTCs with the HDS.
32. Turn the ignition switch to LOCK (0).
33. Turn the ignition switch to ON (II) and the ACC switch ON.
34. Select ADAPTIVE CRUISE CONTROL (ACC) from the DRIVING SUPPORT menu, then enter ACC RELAY from the FUNCTION TEST menu.
35. Do the ACC relay function test with the HDS.
36. Check for DTCs with the HDS.

Is DTC 30 indicated?

YES—Check for loose or poor connections. If OK, replace the ACC unit (see page 25-86). ■

NO—Troubleshoot the indicated DTC(s). If there are no DTCs, the system is OK at this time. ■

37. Check for the DTCs with the HDS.

Is DTC 30 indicated?

YES—Go to step 38.

NO—Go to step 44.

38. Test the ACC relay (see page 22-93).

Is the relay OK?

YES—Go to step 39.

NO—Replace the relay and recheck. ■

39. Remove the ACC relay.
40. Disconnect the ACC unit 20P connector.
41. Disconnect each the brake light 3P connector and the high mount brake light 3P connector.

42. Check for continuity between ACC unit 20P connector terminal No. 1 and body ground.

ACC UNIT 20P CONNECTOR

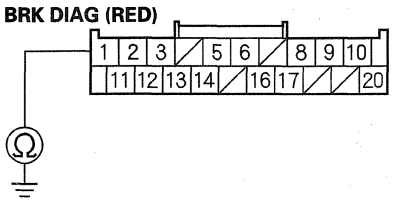

Wire side of female terminals

Is there continuity?

YES—Repair a short to ground in the wire between the ACC unit and the ACC relay. ■

NO—Go to step 43.

43. Check for continuity between ACC unit 20P connector terminal No. 1 and ACC relay 5P connector terminal No. 1.

ACC UNIT 20P CONNECTOR

Wire side of female terminals

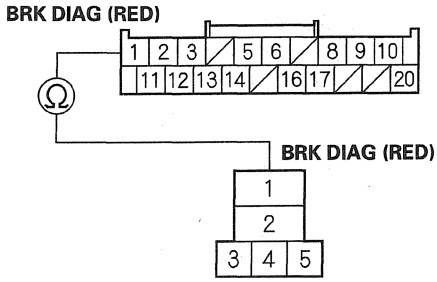

ACC RELAY 5P CONNECTOR

Wire side of female terminals

Is there continuity?

YES—Check for loose or poor connections. If OK, replace the ACC unit (see page 25-86). ■

NO—Repair an open in the wire between the ACC unit and the ACC relay. ■

(cont'd)

DTC Troubleshooting (cont'd)

44. Check the brake lights with the brake pedal pressed.

    Do the brake light come on?

    YES—Intermittent failure, the system is OK at this time. Check for loose or poor connections. ■

    NO—Go to step 45.

45. Check the brake pedal height and adjust it (see page 19-6).

46. Test the brake pedal position switch (see page 22-227).

47. Check the brake lights with the brake pedal pressed.

    Do the brake lights come on?

    YES—Intermittent failure, the system is OK at this time. Check for loose or poor connections. ■

    NO—Repair an open in the BLK wire or poor ground (G701) (see page 22-50). ■

DTC 43: Cal FL Brake System Malfunction

NOTE: In this troubleshooting, you will operate the ADAPTIVE CRUISE CONTROL (ACC) BRAKE (brake actuator 3) continuously four or five times using the FUNCTION TEST with the HDS. During this operation, the VSA modulator-control unit may stop working. This means the VSA modulator-control unit has shut down to protect the system from overheating during continuous operation.
If the VSA modulator-control unit stops working, wait for a few minutes until the VSA modulator-control unit cools down, then restart the troubleshooting.

1. Check for VSA System DTCs with the HDS.

   Are any DTCs indicated?

   YES—Troubleshoot the indicated VSA system DTC(s). ■

   NO—Go to step 2.

2. Start the engine, and turn the ACC switch ON.

3. Clear the DTCs with the HDS.

4. Select ADAPTIVE CRUISE CONTROL (ACC) from the DRIVING SUPPORT menu, then enter the FUNCTION TEST.

5. Activate BRAKE ACTUATOR 3 from the FUNCTION TEST menu.

6. Watch the ACC indicator.

   Is the ACC indicator amber?

   YES—Go to step 10.

   NO—Go to step 7.

7. Activate BRAKE ACTUATOR 3 again.

8. While the brake actuator is operating, press the brake pedal.

9. Watch the ACC indicator.

   Does the ACC indicator stay amber?

   YES—Go to step 10.

   NO—Intermittent failure, the system is OK at this time. Check for loose or poor connections. ■

10. Check for DTCs with the HDS.

    Is DTC 43 indicated?

    YES—Go to step 11.

    NO—Troubleshoot the indicated DTC(s). If there are no DTCs, the system is OK at this time. ■

11. Turn the ignition switch to LOCK (0).

12. Press the brake pedal several times, and check the brake pedal travel.

    Is the brake pedal travel OK?

    YES—Go to step 13.

    NO—Inspect the master cylinder (see page 19-20). ■

13. Check for brake fluid leaks (see page 19-21).

    Are there any fluid leaks?

    YES—Repair the brake fluid leak. ■

    NO—Go to step 14.

14. Start the engine.

15. Check the brake switch signal (BRAKE SW (N.O.)) with the HDS.

    Does the indication show ON when the brake pedal is pressed, and show OFF when the brake pedal is released?

    YES—Go to step 17.

    NO—Go to step 16.

16. Check for DTCs with the HDS.

    Is DTC 60, 110, or 111 indicated?

    YES—Troubleshoot the indicated DTC(s). ■

    NO—Troubleshoot the brake pedal position switch signal circuit (see page 11-311). ■

(cont'd)

DTC Troubleshooting (cont'd)

17. Turn the ACC switch ON.

18. Clear the DTCs with the HDS.

19. Select ADAPTIVE CRUISE CONTROL (ACC) from the DRIVING SUPPORT menu, then enter the FUNCTION TEST.

20. Activate BRAKE ACTUATOR 3 from the FUNCTION TEST.

21. Check for DTCs with the HDS.

    Is DTC 43 indicated?

    YES—Check the brake fluid pressure sensor (see page 25-93). If OK, go to step 22.

    NO—Troubleshoot the indicated DTC(s). If there are no DTCs, the system is OK at this time.■

22. Without the brake pedal pressed, check the left front brake fluid pressure voltage (LF BRAKE P) with the HDS.

    Is there about 0.5 V?

    YES—Go to step 23.

    NO—Go to step 26.

23. Test the brake booster (see page 19-20).

24. Press the brake pedal with about 314 N (32 kgf, 70.6 lbf) of pressure.

25. Check the left front brake fluid pressure voltage (LF BRAKE P) with the HDS.

    Is there about 2.5 V?

    YES—The left front brake fluid pressure signal is OK, check for loose or poor connections. If OK, replace the ACC unit (see page 25-86).■

    NO—Go to step 26.

26. Check for DTCs with the HDS.

    Is DTC 43 indicated?

    YES—Check for loose or poor connections. If OK, replace the ACC unit (see page 25-86).■

    NO—Troubleshoot the indicated DTC(s). If there are no DTCs, the system is OK at this time.■

DTC 44: Cal FL Brake Fluid Pressure Sensor Circuit Open/Short

1. Clear the DTCs with the HDS.
2. Turn the ignition switch to ON (II).
3. Watch the adaptive cruise control (ACC) indicator.

   Does the ACC indicator stay off?

   YES—Intermittent failure, the system is OK at this time. Check for loose or poor connections. ■

   NO—Go to step 4.

4. Check for DTCs with the HDS.

   Is DTC 44 indicated?

   YES—Go to step 5.

   NO—Troubleshoot the indicated DTC(s). If there are no DTCs, the system is OK at this time. ■

5. Check the left front brake fluid pressure voltage (LF BRAKE P) with the HDS.

   Is there about 0.5 V?

   YES—Go to step 6.

   NO—Go to step 9.

6. Test the brake booster (see page 19-20).
7. Press the brake pedal with about 314 N (32 kgf, 70.6 lbf) of pressure.
8. Check the left front brake fluid pressure voltage (LF BRAKE P) with the HDS.

   Is there about 2.5 V?

   YES—The left front brake fluid pressure signal is OK, check for loose or poor connections. If OK, replace the ACC unit (see page 25-86). ■

   NO—Go to step 9.

9. Turn the ignition switch to LOCK (0).
10. Disconnect the ACC unit 20P connector.
11. Check for continuity between ACC unit 20P connector terminal No. 5 and body ground.

ACC UNIT 20P CONNECTOR

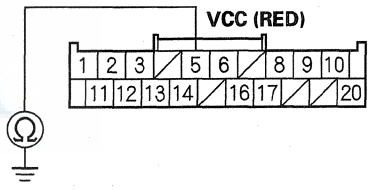

Wire side of female terminals

Is there continuity?

YES—Repair a short to ground in the wire between the ACC unit and the left front brake fluid pressure sensor. ■

NO—Go to step 12.

(cont'd)

DTC Troubleshooting (cont'd)

12. Disconnect the left front brake fluid pressure sensor 3P connector.

13. Connect left front brake fluid pressure sensor 3P connector terminal No. 2 to body ground with a jumper wire.

LEFT FRONT BRAKE FLUID PRESSURE SENSOR 3P CONNECTOR

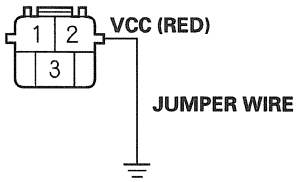

Wire side of female terminals

14. Check for continuity between ACC unit 20P connector terminal No. 5 and body ground.

ACC UNIT 20P CONNECTOR

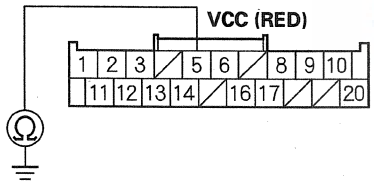

Wire side of female terminals

Is there continuity?

YES—Go to step 15.

NO—Repair an open in the wire between the ACC unit and the left front brake fluid pressure sensor. ■

15. Remove the jumper wire from the left front brake fluid pressure sensor.

16. Reconnect all connectors.

17. Turn the ignition switch to ON (II).

18. Measure the voltage between ACC unit 20P connector terminals No. 3 and No. 5.

ACC UNIT 20P CONNECTOR

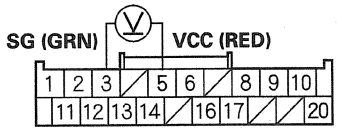

Wire side of female terminals

Is there about 5V?

YES—Go to step 19.

NO—Check for loose or poor connections. If OK, replace the ACC unit (see page 25-86). ■

19. Turn the ignition switch to LOCK (0).

20. Disconnect the ACC unit 20P connector.

21. Check for continuity between ACC unit 20P connector terminal No. 14 and body ground.

ACC UNIT 20P CONNECTOR

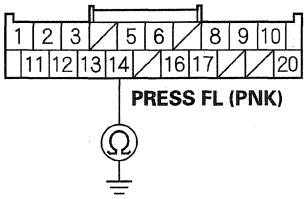

Wire side of female terminals

Is there continuity?

YES—Repair a short to ground in the wire between the ACC unit and the left front brake fluid pressure sensor. ■

NO—Go to step 22.

22. Disconnect the left front brake fluid pressure sensor 3P connector.

23. Connect left front brake fluid pressure sensor 3P connector terminal No. 3 to body ground with a jumper wire.

LEFT FRONT BRAKE FLUID PRESSURE SENSOR 3P CONNECTOR

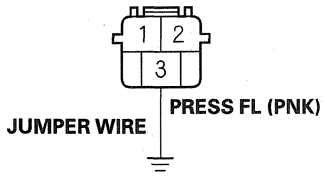

Wire side of female terminals

24. Check for continuity between ACC unit 20P connector terminal No. 14 and body ground.

ACC UNIT 20P CONNECTOR

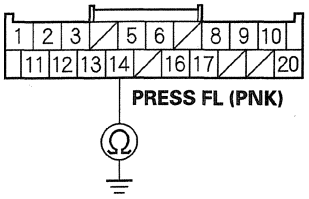

Wire side of female terminals

Is there continuity?

YES—Go to step 25.

NO—Repair an open in the wire between the ACC unit and the left front brake fluid pressure sensor. ■

25. Check for continuity between ACC unit 20P connector terminal No. 5 and body ground.

ACC UNIT 20P CONNECTOR

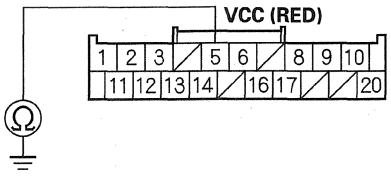

Wire side of female terminals

Is there continuity?

YES—Repair a short in the wire between the PRESS FL line and the VCC line. ■

NO—Go to step 26.

(cont'd)

DTC Troubleshooting (cont'd)

26. Connect left front brake fluid pressure sensor 3P connector terminal No. 1 to body ground with a jumper wire.

LEFT FRONT BRAKE FLUID PRESSURE SENSOR 3P CONNECTOR

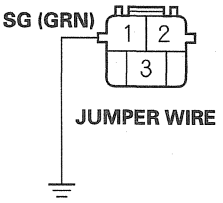

Wire side of female terminals

27. Check for continuity between ACC unit 20P connector terminal No. 3 and body ground.

ACC UNIT 20P CONNECTOR

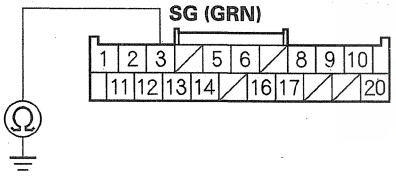

Wire side of female terminals

Is there continuity?

YES—Go to step 28.

NO—Repair an open in the wire between the ACC unit and the left front brake fluid pressure sensor. ■

28. Remove the jumper wire from the left front brake fluid pressure sensor.

29. Reconnect all connectors.

30. Turn the ignition switch to ON (II).

31. Measure the voltage between ACC unit 20P connector terminals No. 3 and No. 14.

ACC UNIT 20P CONNECTOR

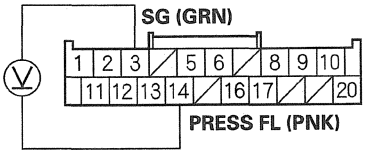

Wire side of female terminals

Is the voltage between 0.4—0.6 V?

YES—Go to step 32.

NO—Replace the left front brake fluid pressure sensor. ■

32. Clear the DTCs with the HDS.

33. Watch the ACC indicator.

Does the ACC indicator stay off?

YES—Intermittent failure, the system is OK at this time. Check for loose or poor connections. ■

NO—Go to step 34.

34. Check for DTCs with the HDS.

Is DTC 44 indicated?

YES—Check for loose or poor connections. If OK, replace the ACC unit (see page 25-86). ■

NO—Troubleshoot the indicated DTC(s). If there are no DTCs, the system is OK at this time. ■

DTC 45: Cal FL Brake Fluid Pressure Sensor Center Position Error

1. Clear the DTCs with the HDS.
2. Turn the ignition switch to ON (II).
3. Watch the adaptive cruise control (ACC) indicator.

   Does the ACC indicator stay off?

   YES—Go to step 4.

   NO—Go to step 5.

4. Press the brake pedal, and watch the ACC indicator.

   Does the ACC indicator stay off?

   YES—The system is OK at this time. Check for loose or poor connections. ■

   NO—Go to step 5.

5. Check for DTCs with the HDS.

   Is DTC 45 indicated?

   YES—Go to step 6.

   NO—Troubleshoot the indicated DTC(s). If there are no DTCs, the system is OK at this time. ■

6. Turn the ignition switch to LOCK (0).
7. Disconnect the ACC unit 20P connector.
8. Check for continuity between ACC unit 20P connector terminal No. 5 and body ground.

ACC UNIT 20P CONNECTOR

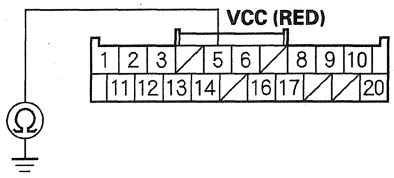

Wire side of female terminals

Is there continuity?

YES—Repair a short to ground in the wire between the ACC unit and the left front brake fluid pressure sensor. ■

NO—Go to step 9.

9. Disconnect the left front brake fluid pressure sensor 3P connector.
10. Connect left front brake fluid pressure sensor 3P connector terminal No. 2 to body ground with a jumper wire.

LEFT FRONT BRAKE FLUID PRESSURE SENSOR 3P CONNECTOR

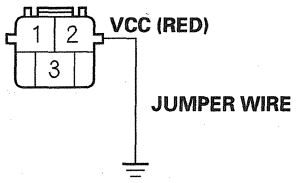

Wire side of female terminals

(cont'd)

DTC Troubleshooting (cont'd)

11. Check for continuity between ACC unit 20P connector terminal No. 5 and body ground.

ACC UNIT 20P CONNECTOR

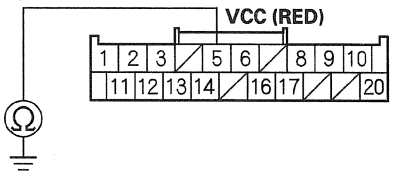

Wire side of female terminals

Is there continuity?

YES—Go to step 12.

NO—Repair an open in the wire between the ACC unit and the left front brake fluid pressure sensor. ■

12. Remove the jumper wire from the left front brake fluid pressure sensor.

13. Reconnect all connectors.

14. Turn the ignition switch to ON (II).

15. Measure the voltage between ACC unit 20P connector terminals No. 3 and No. 5.

ACC UNIT 20P CONNECTOR

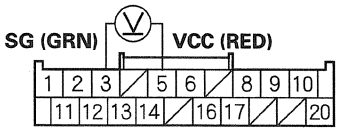

Wire side of female terminals

Is there about 5V?

YES—Go to step 16.

NO—Check for loose or poor connections. If OK, replace the ACC unit (see page 25-86). ■

16. Turn the ignition switch to LOCK (0).

17. Disconnect the ACC unit 20P connector.

18. Check for continuity between ACC unit 20P connector terminal No. 14 and body ground.

ACC UNIT 20P CONNECTOR

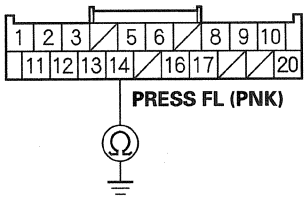

Wire side of female terminals

Is there continuity?

YES—Repair a short to ground in the wire between the ACC unit and the left front brake fluid pressure sensor. ■

NO—Go to step 19.

19. Disconnect the left front brake fluid pressure sensor 3P connector.

20. Connect left front brake fluid pressure sensor 3P connector terminal No. 3 to body ground with a jumper wire.

LEFT FRONT BRAKE FLUID PRESSURE SENSOR 3P CONNECTOR

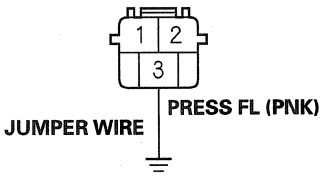

Wire side of female terminals

21. Check for continuity between ACC unit 20P connector terminal No. 14 and body ground.

ACC UNIT 20P CONNECTOR

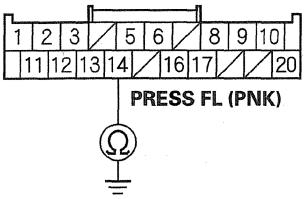

Wire side of female terminals

Is there continuity?

YES—Go to step 22.

NO—Repair an open in the wire between the ACC unit and the left front brake fluid pressure sensor. ■

22. Check for continuity between ACC unit 20P connector terminal No. 5 and body ground.

ACC UNIT 20P CONNECTOR

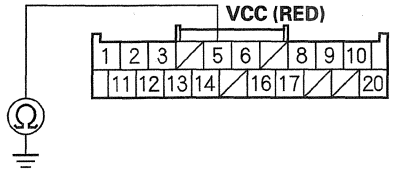

Wire side of female terminals

Is there continuity?

YES—Repair a short in the wire between the PRESS FL line and the VCC line. ■

NO—Go to step 23.

23. Connect left front brake fluid pressure sensor 3P connector terminal No. 1 to body ground with a jumper wire.

LEFT FRONT BRAKE FLUID PRESSURE SENSOR 3P CONNECTOR

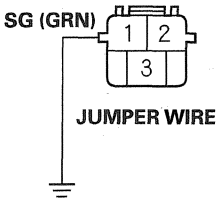

Wire side of female terminals

24. Check for continuity between ACC unit 20P connector terminal No. 3 and body ground.

ACC UNIT 20P CONNECTOR

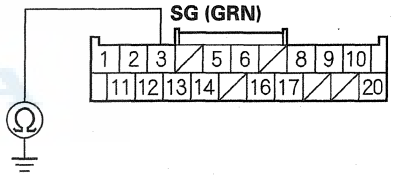

Wire side of female terminals

Is there continuity?

YES—Go to step 25.

NO—Repair an open in the wire between the ACC unit and the left front brake fluid pressure sensor. ■

25. Remove the jumper wire from the left front brake fluid pressure sensor.

26. Reconnect all connectors.

27. Turn the ignition switch to ON (II).

(cont'd)

DTC Troubleshooting (cont'd)

28. Check the brake switch signal (BRAKE SW (N.O.)) with the HDS.

    Does the indication show ON when the brake pedal is pressed, and show OFF when the brake pedal is released?

    YES—Go to step 30.

    NO—Go to step 29.

29. Check for DTCs with the HDS.

    Is DTC 45 indicated?

    YES—Go to step 31.

    NO—Go to step 30.

30. Check for DTCs with the HDS.

    Is DTC 60, 110, or 111 indicated?

    YES—Troubleshoot the indicated DTC(s). ■

    NO—Troubleshoot the brake pedal position switch signal circuit (see page 11-311). ■

31. Measure the voltage between ACC unit 20P connector terminals No. 3 and No. 14.

ACC UNIT 20P CONNECTOR

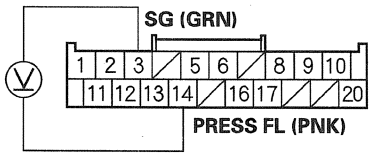

Wire side of female terminals

Is the voltage between 0.4—0.6 V?

YES—Go to step 32.

NO—Replace the left front brake fluid pressure sensor (see page 25-93). ■

32. Clear the DTCs with the HDS.

33. Watch the ACC indicator.

    Does the ACC indicator stay off?

    YES—The system is OK at this time. Check for loose or poor connections. ■

    NO—Go to step 34.

34. Check for DTCs with the HDS.

    Is DTC 45 indicated?

    YES—Check for loose or poor connections. If OK, replace the ACC unit (see page 25-86). ■

    NO—Troubleshoot the indicated DTC(s). If there are no DTCs, the system is OK at this time. ■

DTC 46: Cal FL Brake Fluid Pressure Sensor Malfunction

NOTE: In this troubleshooting, you will operate the ADAPTIVE CRUISE CONTROL (ACC) BRAKE (brake actuator 3) continuously four or five times using the FUNCTION TEST with the HDS. During this operation, the VSA modulator-control unit may stop working. This means the VSA modulator-control unit has shut down to protect the system from overheating during continuous operation.
If the VSA modulator-control unit stops working, wait for a few minutes until the VSA modulator-control unit cools down, then restart the troubleshooting.

1. Start the engine, and turn the ACC switch ON.
2. Clear the DTCs with the HDS.
3. Select ADAPTIVE CRUISE CONTROL (ACC) from the DRIVING SUPPORT menu, then enter the FUNCTION TEST.
4. Activate BRAKE ACTUATOR 3 from the FUNCTION TEST menu.
5. Watch the ACC indicator.

   Is the ACC indicator amber?

   YES—Go to step 9.

   NO—Go to step 6.
6. Activate BRAKE ACTUATOR 3 again.
7. While the brake actuator is operating, press the brake pedal.
8. Watch the ACC indicator.

   Does the ACC indicator stay amber?

   YES—Go to step 9.

   NO—Intermittent failure, the system is OK at this time. Check for loose or poor connections. ■
9. Check for DTCs with the HDS.

   Is DTC 46 indicated?

   YES—Go to step 10.

   NO—Troubleshoot the indicated DTC(s). If there are no DTCs, the system is OK at this time. ■
10. Without the brake pedal pressed, check the left front brake fluid pressure voltage (LF BRAKE P) with the HDS.

    Is there about 0.5 V?

    YES—Go to step 11.

    NO—Go to step 14.
11. Test the brake booster (see page 19-20).
12. Press the brake pedal with about 314 N (32 kgf, 70.6 lbf) of pressure.
13. Check the left front brake fluid pressure voltage (LF BRAKE P) with the HDS.

    Is there about 2.5 V?

    YES—The left front brake fluid pressure signal is OK, check for loose or poor connections. If OK, replace the ACC unit (see page 25-86). ■

    NO—Go to step 14.
14. Turn the ignition switch to LOCK (0).
15. Disconnect the ACC unit 20P connector.

(cont'd)

DTC Troubleshooting (cont'd)

16. Check for continuity between ACC unit 20P connector terminal No. 5 and body ground.

ACC UNIT 20P CONNECTOR

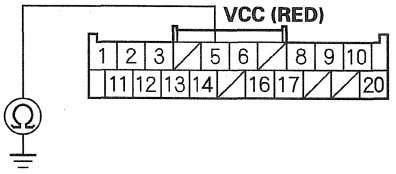

Wire side of female terminals

Is there continuity?

YES—Repair a short to ground in the wire between the ACC unit and the left front brake fluid pressure sensor. ■

NO—Go to step 17.

17. Disconnect the left front brake fluid pressure sensor 3P connector.

18. Connect left front brake fluid pressure sensor 3P connector terminal No. 2 to body ground with a jumper wire.

LEFT FRONT BRAKE FLUID PRESSURE SENSOR 3P CONNECTOR

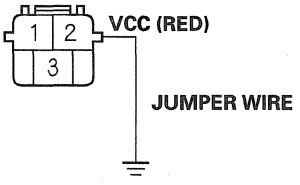

Wire side of female terminals

19. Check for continuity between ACC unit 20P connector terminal No. 5 and body ground.

ACC UNIT 20P CONNECTOR

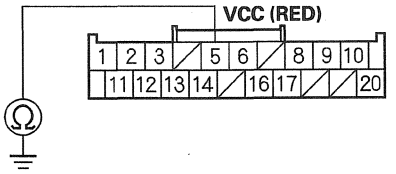

Wire side of female terminals

Is there continuity?

YES—Go to step 20.

NO—Repair an open in the wire between the ACC unit and the left front brake fluid pressure sensor. ■

20. Remove the jumper wire from the left front brake fluid pressure sensor.

21. Reconnect all connectors.

22. Turn the ignition switch to ON (II).

23. Measure the voltage between ACC unit 20P connector terminals No. 3 and No. 5.

ACC UNIT 20P CONNECTOR

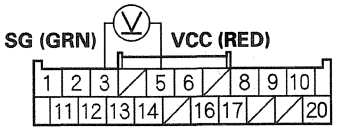

Wire side of female terminals

Is there about 5 V?

YES—Go to step 24.

NO—Check for loose or poor connections. If OK, replace the ACC unit (see page 25-86). ■

24. Turn the ignition switch to LOCK (0).

25. Disconnect the ACC unit 20P connector.

26. Check for continuity between ACC unit 20P connector terminal No. 14 and body ground.

ACC UNIT 20P CONNECTOR

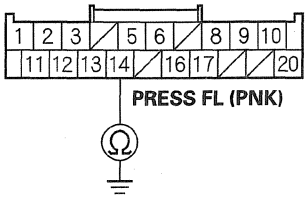

Wire side of female terminals

Is there continuity?

YES—Repair a short to ground in the wire between the ACC unit and the left front brake fluid pressure sensor. ■

NO—Go to step 27.

27. Disconnect the left front brake fluid pressure sensor 3P connector.

28. Connect left front brake fluid pressure sensor 3P connector terminal No. 3 to body ground with a jumper wire.

LEFT FRONT BRAKE FLUID PRESSURE SENSOR 3P CONNECTOR

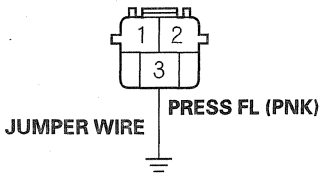

Wire side of female terminals

29. Check for continuity between ACC unit 20P connector terminal No. 14 and body ground.

ACC UNIT 20P CONNECTOR

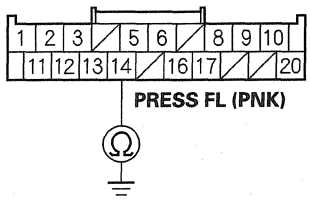

Wire side of female terminals

Is there continuity?

YES—Go to step 30.

NO—Repair an open in the wire between the ACC unit and the left front brake fluid pressure sensor. ■

30. Check for continuity between ACC unit 20P connector terminal No. 5 and body ground.

ACC UNIT 20P CONNECTOR

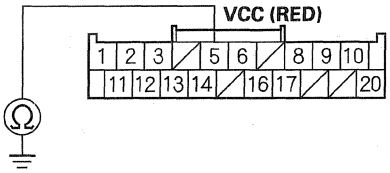

Wire side of female terminals

Is there continuity?

YES—Repair a short in the wire between the PRESS FL line and the VCC line. ■

NO—Go to step 31.

(cont'd)

DTC Troubleshooting (cont'd)

31. Connect left front brake fluid pressure sensor 3P connector terminal No. 1 to body ground with a jumper wire.

LEFT FRONT BRAKE FLUID PRESSURE SENSOR 3P CONNECTOR

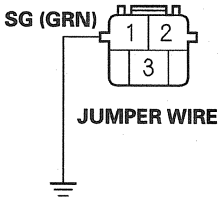

Wire side of female terminals

32. Check for continuity between ACC unit 20P connector terminal No. 3 and body ground.

ACC UNIT 20P CONNECTOR

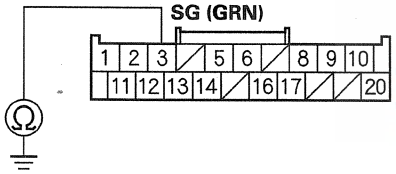

Wire side of female terminals

Is there continuity?

YES—Go to step 33.

NO—Repair an open in the wire between the ACC unit and the left front brake fluid pressure sensor. ■

33. Remove the jumper wire from the left front brake fluid pressure sensor.

34. Reconnect all connectors.

35. Start the engine.

36. Check the brake switch signal (BRAKE SW (N.O.)) with the HDS.

Does the indication show ON when the brake pedal is pressed, and show OFF when the brake pedal is released?

YES—Go to step 38.

NO—Go to step 37.

37. Check for DTCs with the HDS.

Is DTC 60, 110, or 111 indicated?

YES—Troubleshoot the indicated DTC(s). ■

NO—Troubleshoot the brake pedal position switch signal circuit (see page 11-311). ■

38. Turn the ACC switch ON.

39. Clear the DTCs with the HDS.

40. Select ADAPTIVE CRUISE CONTROL (ACC) from the DRIVING SUPPORT menu, then enter the FUNCTION TEST.

41. Activate BRAKE ACTUATOR 3 from the FUNCTION TEST menu.

42. Check for DTCs with the HDS.

Is DTC 46 indicated?

YES—Check for loose or poor connections. If OK, replace the ACC unit (see page 25-86). ■

NO—Go to the VSA system troubleshooting (see page 19-46). ■

DTC 47: Cal FR Brake System Malfunction

NOTE: In this troubleshooting, you will operate the ADAPTIVE CRUISE CONTROL (ACC) BRAKE (brake actuator 3) continuously four or five times using the FUNCTION TEST with the HDS. During this operation, the VSA modulator-control unit may stop working. This means the VSA modulator-control unit has shut down to protect the system from overheating during continuous operation.
If the VSA modulator-control unit stops working, wait for a few minutes until the VSA modulator-control unit cools down, then restart the troubleshooting.

1. Check for VSA System DTCs with the HDS.

   Are any DTCs indicated?

   YES—Troubleshoot the indicated VSA system DTC(s). ■

   NO—Go to step 2.

2. Start the engine, and turn the ACC switch ON.
3. Clear the DTCs with the HDS.
4. Select ADAPTIVE CRUISE CONTROL (ACC) from the DRIVING SUPPORT menu, then enter the FUNCTION TEST.
5. Activate BRAKE ACTUATOR 3 from the FUNCTION TEST menu.
6. Watch the ACC indicator.

   Is the ACC indicator amber?

   YES—Go to step 10.

   NO—Go to step 7.

7. Activate BRAKE ACTUATOR 3 again.
8. While the brake actuator is operating, press the brake pedal.
9. Watch the ACC indicator.

   Does the ACC indicator stay amber?

   YES—Go to step 10.

   NO—Intermittent failure, the system is OK at this time. Check for loose or poor connections. ■

10. Check for DTCs with the HDS.

    Is DTC 47 indicated?

    YES—Go to step 11.

    NO—Troubleshoot the indicated DTC(s). If there are no DTCs, the system is OK at this time. ■

11. Turn the ignition switch to LOCK (0).
12. Press the brake pedal several times, and check the brake pedal travel.

    Is the brake pedal travel OK?

    YES—Go to step 13.

    NO—Inspect the master cylinder (see page 19-20). ■

13. Check for brake fluid leaks (see page 19-21).

    Are there any fluid leaks?

    YES—Repair the brake fluid leak. ■

    NO—Go to step 14.

14. Start the engine.
15. Check the brake switch signal (BRAKE SW (N.O.)) with the HDS.

    Does the indication show ON when the brake pedal is pressed, and show OFF when the brake pedal is released?

    YES—Go to step 17.

    NO—Go to step 16.

(cont'd)

DTC Troubleshooting (cont'd)

16. Check for DTCs with the HDS.

    Is DTC 60, 110, or 111 indicated?

    YES—Troubleshoot the indicated DTC(s). ■

    NO—Troubleshoot the brake pedal position switch signal circuit (see page 11-311). ■

17. Turn the ACC switch ON.

18. Clear the DTCs with the HDS.

19. Select ADAPTIVE CRUISE CONTROL (ACC) from the DRIVING SUPPORT menu, then enter the FUNCTION TEST.

20. Activate BRAKE ACTUATOR 3 from the FUNCTION TEST.

21. Check for DTCs with the HDS.

    Is DTC 47 indicated?

    YES—Check the brake fluid pressure sensor (see page 25-93). If OK, go to step 22.

    NO—Troubleshoot the indicated DTC(s). If there are no DTCs, the system is OK at this time. ■

22. Without the brake pedal pressed, check the right front brake fluid pressure voltage (RF BRAKE P) with the HDS.

    Is there about 0.5 V?

    YES—Go to step 23.

    NO—Go to step 26.

23. Test the brake booster (see page 19-20).

24. Press the brake pedal with about 314 N (32 kgf, 70.6 lbf) of pressure.

25. Check the right front brake fluid pressure voltage (RF BRAKE P) with the HDS.

    Is there about 2.5 V?

    YES—The right front brake fluid pressure signal is OK, check for loose or poor connections. If OK, replace the ACC unit (see page 25-86). ■

    NO—Go to step 26.

26. Check for DTCs with the HDS.

    Is DTC 47 indicated?

    YES—Check for loose or poor connections. If OK, replace the ACC unit (see page 25-86). ■

    NO—Troubleshoot the indicated DTC(s). If there are no DTCs, the system is OK at this time. ■

DTC 48: Cal FR Brake Fluid Pressure Sensor Circuit Open/Short

1. Clear the DTCs with the HDS.
2. Turn the ignition switch ON (II).
3. Watch the adaptive cruise control (ACC) indicator.

   Does the ACC indicator stay off?

   YES—Intermittent failure, the system is OK at this time. Check for loose or poor connections. ■

   NO—Go to step 4.

4. Check for DTCs with the HDS.

   Is DTC 48 indicated?

   YES—Go to step 5.

   NO—Troubleshoot the indicated DTC(s). If there are no DTCs, the system is OK at this time. ■

5. Check the right front brake fluid pressure voltage (RF BRAKE P) with the HDS.

   Is there about 0.5 V?

   YES—Go to step 6.

   NO—Go to step 9.

6. Test the brake booster (see page 19-20).
7. Press the brake pedal with about 314 N (32 kgf, 70.6 lbf) of pressure.
8. Check the right front brake fluid pressure voltage (RF BRAKE P) with the HDS.

   Is there about 2.5 V?

   YES—The right front brake fluid pressure signal is OK, check for loose or poor connections. If OK, replace the ACC unit (see page 25-86). ■

   NO—Go to step 9.

9. Turn the ignition switch to LOCK (0).
10. Disconnect the ACC unit 20P connector.

(cont'd)

DTC Troubleshooting (cont'd)

11. Check for continuity between ACC unit 20P connector terminal No. 5 and body ground.

ACC UNIT 20P CONNECTOR

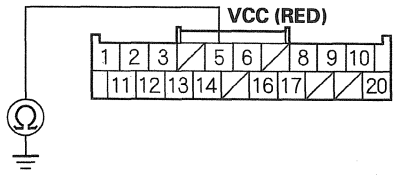

Wire side of female terminals

Is there continuity?

YES—Repair a short to ground in the wire between the ACC unit and the right front brake fluid pressure sensor. ■

NO—Go to step 12.

12. Disconnect the right front brake fluid pressure sensor 3P connector.

13. Connect right front brake fluid pressure sensor 3P connector terminal No. 2 to body ground with a jumper wire.

RIGHT FRONT BRAKE FLUID PRESSURE SENSOR 3P CONNECTOR

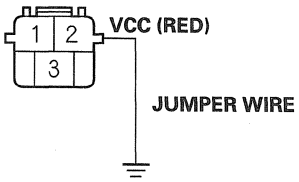

Wire side of female terminals

14. Check for continuity between ACC unit 20P connector terminal No. 5 and body ground.

ACC UNIT 20P CONNECTOR

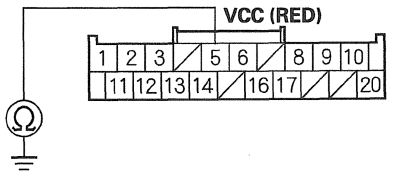

Wire side of female terminals

Is there continuity?

YES—Go to step 15.

NO—Repair an open in the wire between the ACC unit and the right front brake fluid pressure sensor. ■

15. Remove the jumper wire from the right front brake fluid pressure sensor.

16. Reconnect all connectors.

17. Turn the ignition switch to ON (II).

18. Measure the voltage between ACC unit 20P connector terminals No. 3 and No. 5.

ACC UNIT 20P CONNECTOR

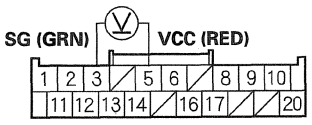

Wire side of female terminals

Is there about 5 V?

YES—Go to step 19.

NO—Check for loose or poor connections. If OK, replace the ACC unit (see page 25-86). ■

19. Turn the ignition switch to LOCK (0).

20. Disconnect the ACC unit 20P connector.

21. Check for continuity between ACC unit 20P connector terminal No. 6 and body ground.

ACC UNIT 20P CONNECTOR

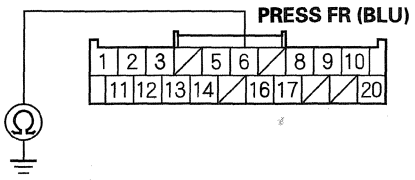

Wire side of female terminals

Is there continuity?

YES—Repair a short to ground in the wire between the ACC unit and the right front brake fluid pressure sensor. ■

NO—Go to step 22.

22. Disconnect the right front brake fluid pressure sensor 3P connector.

23. Connect right front brake fluid pressure sensor 3P connector terminal No. 3 to body ground with a jumper wire.

RIGHT FRONT BRAKE FLUID PRESSURE SENSOR 3P CONNECTOR

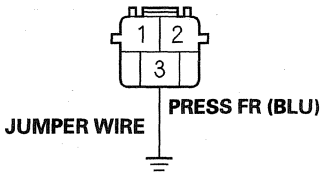

Wire side of female terminals

24. Check for continuity between ACC unit 20P connector terminal No. 6 and body ground.

ACC UNIT 20P CONNECTOR

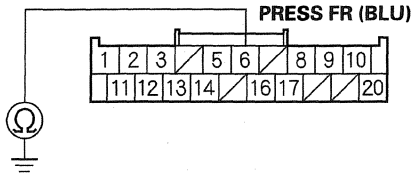

Wire side of female terminals

Is there continuity?

YES—Go to step 25.

NO—Repair an open in the wire between the ACC unit and the right front brake fluid pressure sensor. ■

25. Check for continuity between ACC unit 20P connector terminal No. 5 and body ground.

ACC UNIT 20P CONNECTOR

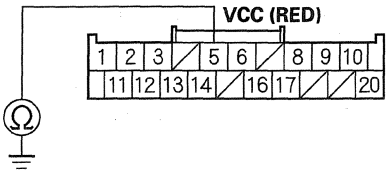

Wire side of female terminals

Is there continuity?

YES—Repair a short in the wire between the PRESS FR line and VCC line. ■

NO—Go to step 26.

(cont'd)

DTC Troubleshooting (cont'd)

26. Connect right front brake fluid pressure sensor 3P connector terminal No. 1 to body ground with a jumper wire.

RIGHT FRONT BRAKE FLUID PRESSURE SENSOR 3P CONNECTOR

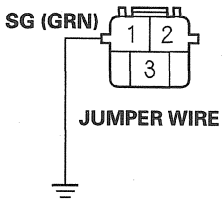

Wire side of female terminals

27. Check for continuity between ACC unit 20P connector terminal No. 3 and body ground.

ACC UNIT 20P CONNECTOR

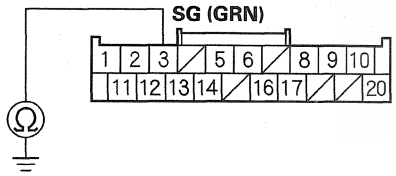

Wire side of female terminals

Is there continuity?

YES—Go to step 28.

NO—Repair an open in the wire between the ACC unit and the right front brake fluid pressure sensor. ■

28. Remove the jumper wire from the right front brake fluid pressure sensor.

29. Reconnect all connectors.

30. Turn the ignition switch to ON (II).

31. Measure the voltage between ACC unit 20P connector terminals No. 3 and No. 6.

ACC UNIT 20P CONNECTOR

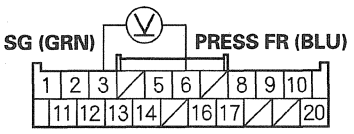

Wire side of female terminals

Is the voltage between 0.4—0.6 V?

YES—Go to step 32.

NO—Replace the right front brake fluid pressure sensor. ■

32. Clear the DTCs with the HDS.

33. Watch the ACC indicator.

Does the ACC indicator stay off?

YES—Intermittent failure, the system is OK at this time. Check for loose or poor connections. ■

NO—Go to step 34.

34. Check for DTCs with the HDS.

Is DTC 48 indicated?

YES—Check for loose or poor connections. If OK, replace the ACC unit (see page 25-86). ■

NO—Troubleshoot the indicated DTC(s). If there are no DTCs, the system is OK at this time. ■

DTC 49: Cal FR Brake Fluid Pressure Sensor Center Position Error

1. Clear the DTCs with the HDS.
2. Turn the ignition switch to ON (II).
3. Watch the adaptive cruise control (ACC) indicator.

   Does the ACC indicator stay off?

   YES—Go to step 4.

   NO—Go to step 5.
4. Press the brake pedal, and watch the ACC indicator.

   Does the ACC indicator stay off?

   YES—The system is OK at this time. Check for loose or poor connections. ■

   NO—Go to step 5.
5. Check for DTCs with the HDS.

   Is DTC 49 indicated?

   YES—Go to step 6.

   NO—Troubleshoot the indicated DTC(s). If there are no DTCs, the system is OK at this time. ■
6. Turn the ignition switch to LOCK (0).
7. Disconnect the ACC unit 20P connector.
8. Check for continuity between ACC unit 20P connector terminal No. 5 and body ground.

ACC UNIT 20P CONNECTOR

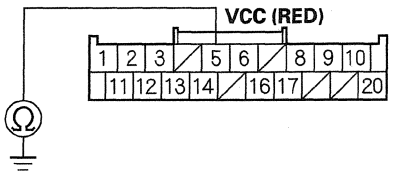

Wire side of female terminals

Is there continuity?

YES—Repair a short to ground in the wire between the ACC unit and the right front brake fluid pressure sensor. ■

NO—Go to step 9.

9. Disconnect the right front brake fluid pressure sensor 3P connector.
10. Connect right front brake fluid pressure sensor 3P connector terminal No. 2 to body ground with a jumper wire.

RIGHT FRONT BRAKE FLUID PRESSURE SENSOR 3P CONNECTOR

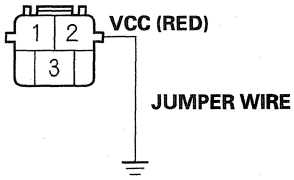

Wire side of female terminals

(cont'd)

DTC Troubleshooting (cont'd)

11. Check for continuity between ACC unit 20P connector terminal No. 5 and body ground.

ACC UNIT 20P CONNECTOR

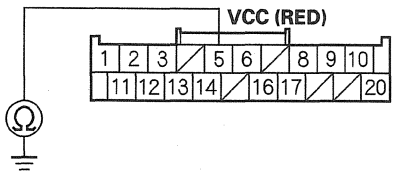

Wire side of female terminals

Is there continuity?

YES—Go to step 12.

NO—Repair an open in the wire between the ACC unit and the right front brake fluid pressure sensor. ■

12. Remove the jumper wire from the right front brake fluid pressure sensor.
13. Reconnect all connectors.
14. Turn the ignition switch to ON (II).
15. Measure the voltage between ACC unit 20P connector terminals No. 3 and No. 5.

ACC UNIT 20P CONNECTOR

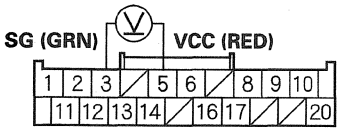

Wire side of female terminals

Is there about 5V?

YES—Go to step 16.

NO—Check for loose or poor connections. If OK, replace the ACC unit (see page 25-86). ■

16. Turn the ignition switch to LOCK (0).
17. Disconnect the ACC unit 20P connector.
18. Check for continuity between ACC unit 20P connector terminal No. 6 and body ground.

ACC UNIT 20P CONNECTOR

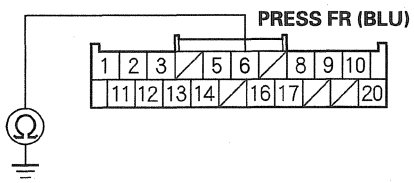

Wire side of female terminals

Is there continuity?

YES—Repair a short to ground in the wire between the ACC unit and the right front brake fluid pressure sensor. ■

NO—Go to step 19.

19. Disconnect the right front brake fluid pressure sensor 3P connector.
20. Connect right front brake fluid pressure sensor 3P connector terminal No. 3 to body ground with a jumper wire.

RIGHT FRONT BRAKE FLUID PRESSURE SENSOR 3P CONNECTOR

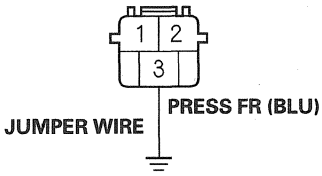

Wire side of female terminals

21. Check for continuity between ACC unit 20P connector terminal No. 6 and body ground.

ACC UNIT 20P CONNECTOR

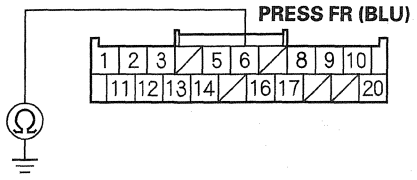

Wire side of female terminals

Is there continuity?

YES—Go to step 22.

NO—Repair an open in the wire between the ACC unit and the right front brake fluid pressure sensor. ■

22. Check for continuity between ACC unit 20P connector terminal No. 5 and body ground.

ACC UNIT 20P CONNECTOR

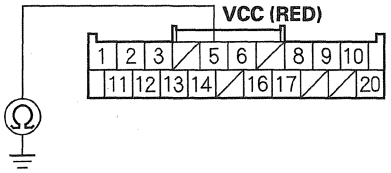

Wire side of female terminals

Is there continuity?

YES—Repair a short in the wire between the PRESS FR line and the VCC line. ■

NO—Go to step 23.

23. Connect right front brake fluid pressure sensor 3P connector terminal No. 1 to body ground with a jumper wire.

RIGHT FRONT BRAKE FLUID PRESSURE SENSOR 3P CONNECTOR

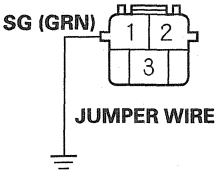

Wire side of female terminals

24. Check for continuity between ACC unit 20P connector terminal No. 3 and body ground.

ACC UNIT 20P CONNECTOR

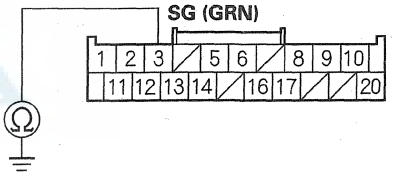

Wire side of female terminals

Is there continuity?

YES—Go to step 25.

NO—Repair an open in the wire between the ACC unit and the right front brake fluid pressure sensor. ■

25. Remove the jumper wire from the right front brake fluid pressure sensor.

26. Reconnect all connectors.

27. Turn the ignition switch to ON (II).

(cont'd)

DTC Troubleshooting (cont'd)

28. Check the brake switch signal (BRAKE SW (N. O.)) with the HDS.

    Does the indication show ON when the brake pedal is pressed, and show OFF when the brake pedal is released?

    YES—Go to step 30.

    NO—Go to step 29.

29. Check for DTCs with the HDS.

    Is DTC 49 indicated?

    YES—Go to step 31.

    NO—Go to step 30.

30. Check for DTCs with the HDS.

    Is DTC 60, 110, or 111 indicated?

    YES—Troubleshoot the indicated DTC(s). ■

    NO—Troubleshoot the brake pedal position switch signal circuit (see page 11-311). ■

31. Measure the voltage between ACC unit 20P connector terminals No. 3 and No. 6.

    ACC UNIT 20P CONNECTOR

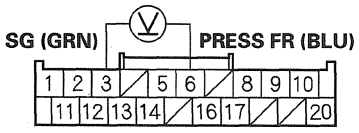

    Wire side of female terminals

    Is the voltage between 0.4—0.6 V?

    YES—Go to step 32.

    NO—Replace the right front brake fluid pressure sensor (see page 25-93). ■

32. Clear the DTCs with the HDS.

33. Watch the ACC indicator.

    Does the ACC indicator stay off?

    YES—The system is OK at this time. Check for loose or poor connections. ■

    NO—Go to step 34.

34. Check for DTCs with the HDS.

    Is DTC 49 indicated?

    YES—Check for loose or poor connections. If OK, replace the ACC unit (see page 25-86). ■

    NO—Troubleshoot the indicated DTC(s). If there are no DTCs, the system is OK at this time. ■

DTC 50: Cal FR Brake Fluid Pressure Sensor Malfunction

NOTE: In this troubleshooting, you will operate the ADAPTIVE CRUISE CONTROL (ACC) BRAKE (brake actuator 3) continuously four or five times using the FUNCTION TEST with the HDS. During this operation, the VSA modulator-control unit may stop working. This means the VSA modulator-control unit has shut down to protect the system from overheating during continuous operation.
If the VSA modulator-control unit stops working, wait for a few minutes until the VSA modulator-control unit cools down, then restart the troubleshooting.

1. Start the engine, and turn the ACC switch ON.
2. Clear the DTCs with the HDS.
3. Select ADAPTIVE CRUISE CONTROL (ACC) from the DRIVING SUPPORT menu, then enter the FUNCTION TEST.
4. Activate BRAKE ACTUATOR 3 from the FUNCTION TEST menu.
5. Watch the ACC indicator.

   Is the ACC indicator amber?

   YES—Go to step 9.

   NO—Go to step 6.
6. Activate BRAKE ACTUATOR 3 again.
7. While the brake actuator is operating, press the brake pedal.
8. Watch the ACC indicator.

   Does the ACC indicator stay amber?

   YES—Go to step 9.

   NO—Intermittent failure, the system is OK at this time. Check for loose or poor connections. ■
9. Check for DTCs with the HDS.

   Is DTC 50 indicated?

   YES—Go to step 10.

   NO—Troubleshoot the indicated DTC(s). If there are no DTCs, the system is OK at this time. ■
10. Without the brake pedal pressed, check the right front brake fluid pressure voltage (RF BRAKE P) with the HDS.

    Is there about 0.5 V?

    YES—Go to step 11.

    NO—Go to step 14.
11. Test the brake booster (see page 19-20).
12. Press the brake pedal with about 314 N (32 kgf, 70.6 lbf) of pressure.

(cont'd)

DTC Troubleshooting (cont'd)

13. Check the right front brake fluid pressure voltage (RF BRAKE P) with the HDS.

    Is there about 2.5 V?

    YES—The right front brake fluid pressure signal is OK, check for loose or poor connections. If OK, replace the ACC unit (see page 25-86). ■

    NO—Go to step 14.

14. Turn the ignition switch to LOCK (0).

15. Disconnect the ACC unit 20P connector.

16. Check for continuity between ACC unit 20P connector terminal No. 5 and body ground.

ACC UNIT 20P CONNECTOR

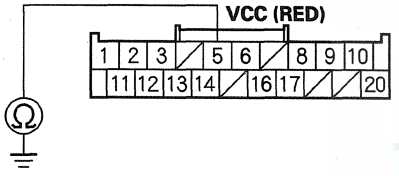

Wire side of female terminals

Is there continuity?

YES—Repair a short to ground in the wire between the ACC unit and the right front brake fluid pressure sensor. ■

NO—Go to step 17.

17. Disconnect the right front brake fluid pressure sensor 3P connector.

18. Connect right front brake fluid pressure sensor 3P connector terminal No. 2 to body ground with a jumper wire.

RIGHT FRONT BRAKE FLUID PRESSURE SENSOR 3P CONNECTOR

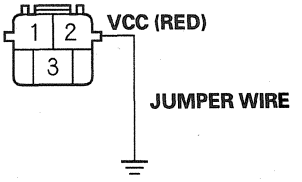

Wire side of female terminals

19. Check for continuity between ACC unit 20P connector terminal No. 5 and body ground.

ACC UNIT 20P CONNECTOR

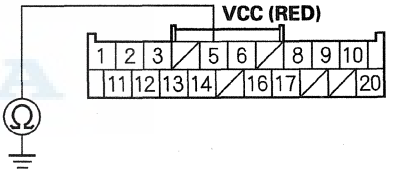

Wire side of female terminals

Is there continuity?

YES—Go to step 20.

NO—Repair an open in the wire between the ACC unit and the right front brake fluid pressure sensor. ■

20. Remove the jumper wire from the right front brake fluid pressure sensor.

21. Reconnect all connectors.

22. Turn the ignition switch to ON (II).

23. Measure the voltage between ACC unit 20P connector terminals No. 3 and No. 5.

ACC UNIT 20P CONNECTOR

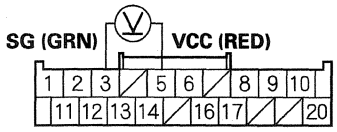

Wire side of female terminals

Is there about 5 V?

YES—Go to step 24.

NO—Check for loose or poor connections. If OK, replace the ACC unit (see page 25-86). ■

24. Turn the ignition switch to LOCK (0).

25. Disconnect the ACC unit 20P connector.

26. Check for continuity between ACC unit 20P connector terminal No. **6** and body ground.

ACC UNIT 20P CONNECTOR

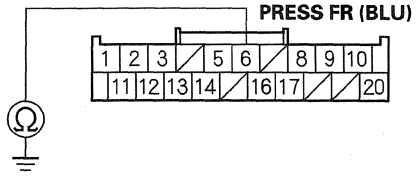

Wire side of female terminals

Is there continuity?

YES—Repair a short to ground in the wire between the ACC unit and the right front brake fluid pressure sensor. ■

NO—Go to step 27.

27. Disconnect the right front brake fluid pressure sensor 3P connector.

28. Connect right front brake fluid pressure sensor 3P connector terminal No. 3 to body ground with a jumper wire.

RIGHT FRONT BRAKE FLUID PRESSURE SENSOR 3P CONNECTOR

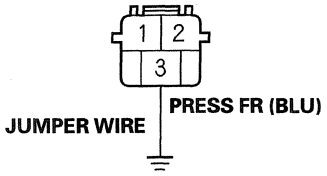

Wire side of female terminals

29. Check for continuity between ACC unit 20P connector terminal No. 6 and body ground.

ACC UNIT 20P CONNECTOR

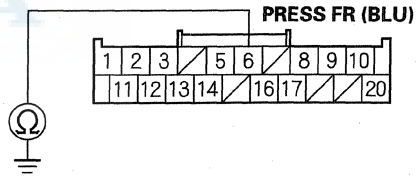

Wire side of female terminals

Is there continuity?

YES—Go to step 30.

NO—Repair an open in the wire between the ACC unit and the right front brake fluid pressure sensor. ■

(cont'd)

DTC Troubleshooting (cont'd)

30. Check for continuity between ACC unit 20P connector terminal No. 5 and body ground.

ACC UNIT 20P CONNECTOR

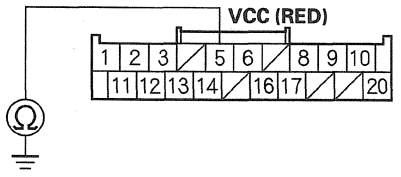

Wire side of female terminals

Is there continuity?

YES—Repair a short in the wire between the PRESS FR line and the VCC line. ■

NO—Go to step 31.

31. Connect right front brake fluid pressure sensor 3P connector terminal No. 1 to body ground with a jumper wire.

RIGHT FRONT BRAKE FLUID PRESSURE SENSOR 3P CONNECTOR

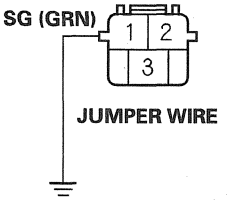

Wire side of female terminals

32. Check for continuity between ACC unit 20P connector terminal No. 3 and body ground.

ACC UNIT 20P CONNECTOR

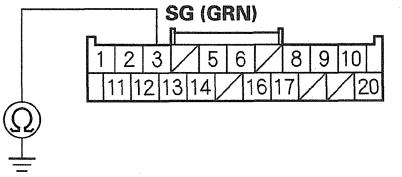

Wire side of female terminals

Is there continuity?

YES—Go to step 33.

NO—Repair an open in the wire between the ACC unit and the right front brake fluid pressure sensor. ■

33. Remove the jumper wire from the right front brake fluid pressure sensor.

34. Reconnect all connectors.

35. Start the engine.

36. Check the brake switch signal (BRAKE SW (N.O.)) with the HDS.

Does the indication show ON when the brake pedal is pressed, and show OFF when the brake pedal is released?

YES—Go to step 38.

NO—Go to step 37.

37. Check for DTCs with the HDS.

    Is DTC 60, 110, or 111 indicated?

    YES—Troubleshoot the indicated DTC(s). ■

    NO—Troubleshoot the brake pedal position switch signal circuit (see page 11-311). ■

38. Turn the ACC switch ON.

39. Clear the DTCs with the HDS.

40. Select ADAPTIVE CRUISE CONTROL (ACC) from the DRIVING SUPPORT menu, then enter the FUNCTION TEST.

41. Activate BRAKE ACTUATOR 3 from the FUNCTION TEST menu.

42. Check for DTCs with the HDS.

    Is DTC 50 indicated?

    YES—Check for loose or poor connections. If OK, replace the ACC unit (see page 25-86). ■

    NO—Go to the VSA system troubleshooting (see page 19-46). ■

DTC 60: Communication Line Error

1. Clear the DTCs with the HDS.
2. Turn the ignition switch to ON (II).
3. Turn the adaptive cruise control (ACC) switch ON.
4. Watch the ACC indicator.

    Does the ACC indicator stay off?

    YES—Intermittent failure, the system is OK at this time. Check for loose or poor connections. ■

    NO—Go to step 5.

5. Check for DTCs with the HDS.

    Is DTC 60 indicated?

    YES—Go to step 6.

    NO—Troubleshoot the indicated DTC(s). If there are no DTCs, the system is OK at this time. ■

6. Turn the ignition switch to LOCK (0).
7. Disconnect the ACC unit 20P connector.
8. Measure the resistance between ACC unit 20P connector terminals No. 10 and No. 20.

ACC UNIT 20P CONNECTOR

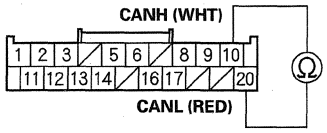

Wire side of female terminals

Is there about 60 Ω at room temperature?

YES—The F-CAN line is OK at this time, check for loose or poor connections. If OK, replace the ACC unit (see page 25-86). ■

NO—Repair an open in the wire between the ACC unit and the branch of the communication line (CANL line or CANH line.) ■

DTC Troubleshooting (cont'd)

DTC 61: Millimeter Wave Radar Communication Error

1. Clear the DTC with the HDS.
2. Turn the ignition switch to ON (II).
3. Watch the adaptive cruise control (ACC) indicator and the CMBS indicator.

   Do both indicators come on?

   YES—Go to step 4.

   NO—Intermittent failure, the system is OK at this time. ■
4. Check for DTCs with the HDS.

   Is DTC 61 indicated?

   YES—Go to step 5.

   NO—Troubleshoot the indicated DTC(s). If there are no DTCs, the system is OK at this time. ■
5. Turn the ignition switch to LOCK (0).
6. Check the No. 29 (7.5 A) fuse in the under-dash fuse/relay box.

   Is the fuse OK?

   YES—Go to step 7.

   NO—Replace the fuse and recheck. ■
7. Disconnect the millimeter wave radar 5P connector.
8. Turn the ignition switch to ON (II).
9. Measure the voltage between millimeter wave radar 5P connector terminal No. 1 and body ground.

MILLIMETER WAVE RADAR 5P CONNECTOR

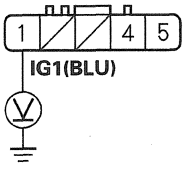

Wire side of female terminals

Is there battery voltage?

YES—Go to step 10.

NO—Repair an open in the wire between the millimeter wave radar and the No. 29 (7.5 A) fuse in the driver's under-dash fuse/relay box. ■

10. Turn the ignition switch to LOCK (0).
11. Check for continuity between millimeter wave radar 5P connector terminal No. 4 and body ground.

MILLIMETER WAVE RADAR 5P CONNECTOR

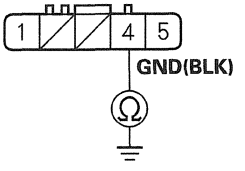

Wire side of female terminals

Is there continuity?

YES—Go to step 12.

NO—Repair an open in the wire or poor ground (G401) (see page 22-30). ■

12. Turn the ignition switch to ON (II) and the ACC switch ON.

13. Measure the voltage between millimeter wave radar 5P connector terminal No. 5 and body ground.

MILLIMETER WAVE RADAR 5P CONNECTOR

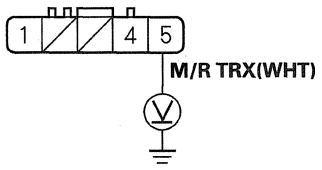

Wire side of female terminals

Is there battery voltage?

YES—Go to step 15.

NO—Go to step 14.

14. Measure the voltage between ACC unit 20P connector terminal No. 17 and body ground.

ACC UNIT 20P CONNECTOR

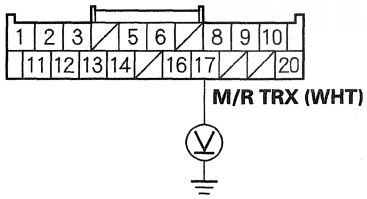

Wire side of female terminals

Is there battery voltage?

YES—Repair an open in the wire between the ACC unit and the millimeter wave radar. ■

NO—Check for loose or poor connections. If OK, replace the ACC unit (see page 25-86), then go to step 18.

15. Turn the ignition switch to LOCK (0).

16. Disconnect the ACC unit 20P connector.

17. Check for continuity between millimeter wave radar 5P connector terminal No. 5 and body ground.

MILLIMETER WAVE RADAR 5P CONNECTOR

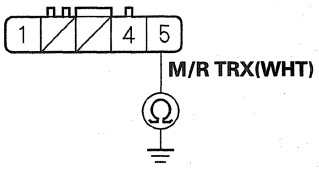

Wire side of female terminals

Is there continuity?

YES—Repair a short to ground in the wire between the ACC unit and the millimeter wave radar. ■

NO—Check for loose or poor connections. If OK, replace the ACC unit (see page 25-86), then go to step 18.

(cont'd)

DTC Troubleshooting (cont'd)

18. Clear the DTCs with the HDS.
19. Turn the ignition switch to ON (II).
20. Watch the ACC indicator and CMBS indicator.

    Do both indicators come on?

    YES—Go to step 21.

    NO—Intermittent failure, the system is OK at this time. ■
21. Check for DTCs with the HDS.

    Is DTC 61 indicated?

    YES—Check for loose or poor connections. If OK, replace the millimeter wave radar (see page 25-82). After replacement, do the millimeter wave radar aiming (see page 25-87). ■

    NO—Troubleshoot the indicated DTC(s). If there are no DTCs, the system is OK at this time. ■

DTC 62: Millimeter Wave Radar Sensor Error

1. Clear the DTCs with the HDS.
2. Turn the ignition switch to ON (II) and the adaptive cruise control (ACC) switch ON.
3. Watch the adaptive cruise control (ACC) indicator and the CMBS indicator.

   Do both indicators come on?

   YES—Go to step 4.

   NO—Intermittent failure, the system is OK at this time. ■
4. Check for DTCs with the HDS.

   Is DTC 62 indicated?

   YES—Check for loose or poor connections. If OK, replace the millimeter wave radar (see page 25-82). After replacement, do the millimeter wave radar aiming (see page 25-87). ■

   NO—Troubleshoot the indicated DTC(s). ■

DTC 63: Millimeter Wave Radar Aiming Error

1. Clear the DTCs with the HDS.
2. Turn the ignition switch to ON (II).
3. Watch the adaptive cruise control (ACC) indicator and the CMBS indicator.

   Do both indicators come on?

   YES—Go to step 4.

   NO—Intermittent failure, the system is OK at this time. ■
4. Check for DTCs with the HDS.

   Is DTC 63 indicated?

   YES—Go to step 5.

   NO—Troubleshoot the indicated DTC(s). If there are no DTCs, the system is OK at this time. ■
5. Remove the upper grille (see page 20-162).
6. Check the installation of the millimeter wave radar and the main bracket.

   Is the installation OK?

   YES—Go to step 7.

   NO—Reinstall or replace the part that has a problem, then go to step 7.
7. Do the millimeter wave radar aiming procedure (see page 25-87).
8. Test-drive the vehicle at 25 mph (40 km/h) or more, and turn the ACC switch ON.
9. With the ACC activated, test-drive the vehicle on a straight road at 25 mph (40 km/h) or more for 5 minutes or more.
10. Watch the ACC indicator and CMBS indicator.

    Do both indicators come on?

    YES—Go to step 11.

    NO—The system is OK at this time. ■
11. Check for DTCs with the HDS.

    Is DTC 63 indicated?

    YES—Check for loose or poor connections. If OK, replace the millimeter wave radar (see page 25-82). After replacement, do the millimeter wave radar aiming (see page 25-87). ■

    NO—Troubleshoot the indicated DTC(s). If there are no DTCs, the system is OK at this time. ■

DTC Troubleshooting (cont'd)

DTC 73: Variation failure of the PCM

NOTE: When DTC 113 is also indicated, troubleshooting of DTC 113 should be done first (see page 25-71).

1. Clear the DTCs with the HDS.
2. Turn the ignition switch to ON (II).
3. Check for DTCs with the HDS.

   Is DTC 73 indicated?

   YES—Go to step 4.

   NO—Intermittent failure, the system is OK at this time. Check for loose or poor connections. ■
4. Check for PGM-FI system DTCs with the HDS.

   Are any DTCs indicated?

   YES—Troubleshoot the indicated PGM-FI system DTC(s). ■

   NO—Go to step 5.
5. Check for gauge control module DTCs with the HDS.

   Are any DTCs indicated?

   YES—Troubleshoot the indicated gauge control module DTC(s). ■

   NO—Faulty ACC unit; replace the ACC unit (see page 25-86). ■

DTC 81: Engine Control System (Including PCM) Malfunction

1. Check for PGM-FI System DTCs with the HDS.

   Are any DTCs indicated?

   YES—Troubleshoot the indicated PGM-FI system DTC(s). ■

   NO—Go to step 2.

2. Clear the DTCs with the HDS.

3. Test-drive the vehicle with the adaptive cruise control (ACC) activated.

4. Check for DTCs with the HDS.

   Is DTC 81 indicated?

   YES—Check for loose or poor connections. If OK, replace the ACC unit (see page 25-86). ■

   NO—Intermittent failure, the system is OK at this time. Check for loose or poor connections. ■

DTC 90: A/T Control System (Including PCM) Malfunction

1. Check for A/T System DTCs with the HDS.

   Are any DTCs indicated?

   YES—Troubleshoot the indicated A/T system DTC(s). ■

   NO—Go to step 2.

2. Clear the DTCs with the HDS.

3. Test-drive the vehicle with the adaptive cruise control (ACC) activated.

4. Check for DTCs with the HDS.

   Is DTC 90 indicated?

   YES—Check for loose or poor connections. If OK, replace the ACC unit (see page 25-86). ■

   NO—Intermittent failure, the system is OK at this time. Check for loose or poor connections. ■

HONDA

DTC Troubleshooting (cont'd)

DTC 92: VSA Modulator-Control Unit Malfunction

1. Check for VSA System DTCs with the HDS.

   Are any DTCs indicated?

   YES—Troubleshoot the indicated VSA system DTC(s). ■

   NO—Go to step 2.

2. Clear the DTCs with the HDS.
3. Test-drive the vehicle with the adaptive cruise control (ACC) activated.
4. Check for DTCs with the HDS.

   Is DTC 92 indicated?

   YES—Check for loose or poor connections. If OK, replace the ACC unit (see page 25-86). ■

   NO—Intermittent failure, the system is OK at this time. Check for loose or poor connections. ■

DTC 105: Dust or Dirt on the Millimeter Wave Radar

NOTE: When driving on a road with little traffic and minimal reflecting objects for the millimeter wave radar, DTC 105 is stored temporally. Also DTC 105 is sometimes stored near overpasses and bodies of water. Check for dirt on the front surface of the millimeter wave radar.

1. Check for dust or dirt on the millimeter wave radar.

   Is the surface dirty?

   YES—Clean the millimeter wave radar, then recheck the system. ■

   NO—Go to step 2.

2. Remove the upper grille (see page 20-162).
3. Check the installation of the emblem.

   Is the emblem installed correctly?

   YES—Intermittent failure, the system is OK at this time. ■

   NO—Reinstall the emblem or the upper grille correctly. If damaged, replace it. ■

DTC 107: Millimeter Wave Radar Aiming Incomplete

NOTE: If the millimeter wave radar is removed or replaced, it is necessary to aim it, otherwise DTC 107 is stored even if the system is OK.

1. Turn the ignition switch to ON (II), and watch the adaptive cruise control (ACC) indicator.

   Does the ACC indicator stay off?

   YES—Intermittent failure, the system is OK at this time. ■

   NO—Go to step 2.

2. Check for DTCs with the HDS.

   Is DTC 107 indicated?

   YES—If DTC 107 is indicated again after the aiming is complete, check for loose or poor connections. If OK, replace the millimeter wave radar (see page 25-82). ■

   NO—Go to step 3.

3. Check for DTCs with the HDS.

   Are any DTCs indicated?

   YES—Troubleshoot the indicated DTC(s). ■

   NO—Check for loose or poor connections. If OK, replace the ACC unit (see page 25-86), then go to step 4.

4. Check for DTCs with the HDS.

   Is DTC 107 indicated?

   YES—Check for loose or poor connections. If OK, replace the millimeter wave radar (see page 25-82). ■

   NO—Troubleshoot the indicated DTC(s). If there are no DTCs, the system is OK at this time. ■

HONDA

DTC Troubleshooting (cont'd)

DTC 110: Lost Communication with the PCM (PGM-FI System)

DTC 111: Lost Communication with the PCM (A/T System)

1. Check for PGM-FI system DTCs with the HDS.

   Are any DTCs indicated?

   YES—Troubleshoot the indicated PGM-FI system DTC(s). ■

   NO—Go to step 2.

2. Check the DTCs with the HDS.

3. Turn the ignition switch to ON (II) and the adaptive cruise control (ACC) switch ON.

4. Check for DTCs with the HDS.

   Is DTC 110 or 111 indicated?

   YES—Go to step 5.

   NO—Intermittent failure, the system is OK at this time. Check for loose or poor connections. ■

5. Turn the ignition switch to LOCK (0).

6. Disconnect the ACC unit 20P connector.

7. Jump the SCS line with the HDS, then disconnect PCM connector E (31P) (see page 11-232).

8. Check for continuity between ACC unit 20P connector terminal No. 10 and PCM connector E (31P) terminal No. 15.

ACC UNIT 20P CONNECTOR

Wire side of female terminals

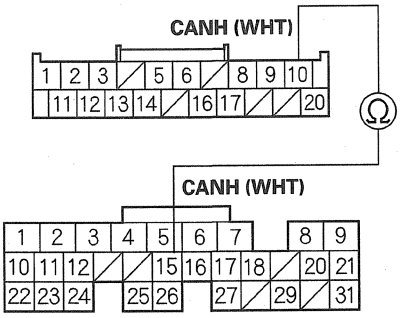

PCM CONNECTOR E (31P)

Wire side of female terminals

Is there continuity?

YES—Go to step 9.

NO—Repair an open in the wire between the ACC unit and the branch of the F-CAN line (CANH). ■

9. Check for continuity between ACC unit 20P connector terminal No. 20 and PCM connector E (31P) terminal No. 26.

ACC UNIT 20P CONNECTOR

Wire side of female terminals

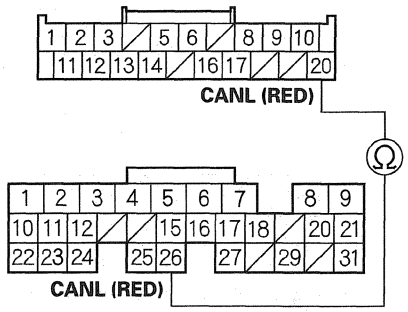

PCM CONNECTOR E (31P)

Wire side of female terminals

Is there continuity?

YES—Check for loose or poor connections. If OK, replace the ACC unit (see page 25-86). ■

NO—Repair an open in the wire between the ACC unit and the branch of the F-CAN line (CANL). ■

DTC 112: Lost Communication with the VSA Modulator-Control Unit

1. Check for VSA system DTCs with the HDS.

   Are any DTCs indicated?

   YES—Troubleshoot the indicated VSA system DTC(s). ■

   NO—Go to step 2.

2. Clear the DTCs with the HDS.
3. Turn the ignition switch to ON (II) and the adaptive cruise control (ACC) switch ON.
4. Check for DTCs with the HDS.

   Is DTC 112 indicated?

   YES—Go to step 5.

   NO—Intermittent failure, the system is OK at this time. Check for loose or poor connections. ■

5. Turn the ignition switch to LOCK (0).
6. Disconnect the ACC unit 20P connector.
7. Disconnect the VSA modulator-control unit 47P connector.

(cont'd)

DTC Troubleshooting (cont'd)

8. Check for continuity between ACC unit 20P connector terminal No. 10 and VSA modulator-control unit 47P connector terminal No. 14.

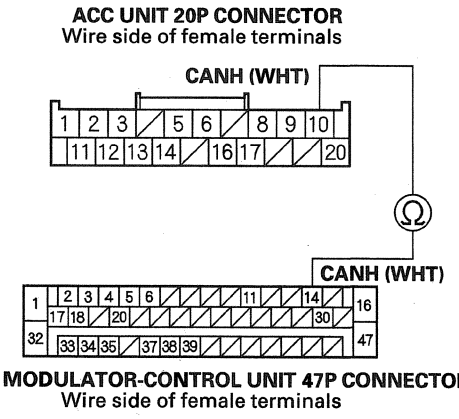

Is there continuity?

YES—Go to step 9.

NO—Repair an open in the wire between the ACC unit and the branch of the F-CAN line (CANH). ■

9. Check for continuity between ACC unit 20P connector terminal No. 20 and VSA modulator-control unit 47P connector terminal No. 30.

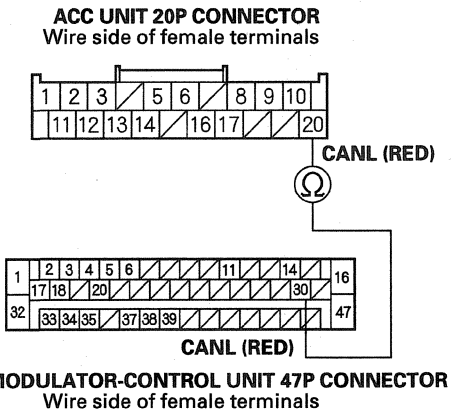

Is there continuity?

YES—Check for loose or poor connections. If OK, replace the ACC unit (see page 25-86). ■

NO—Repair an open in the wire between the ACC unit and the branch of the F-CAN line (CANL). ■

DTC 113: Lost Communication with the Gauge Control Module

1. Check the gauge control module with the gauge control module self-diagnostic function.

   Is the gauge control module OK?

   YES—Go to step 2.

   NO—Replace the gauge control module, and recheck. ■

2. Clear the DTCs with the HDS.

3. Turn the ignition switch to ON (II) and the adaptive cruise control (ACC) switch ON.

4. Check for DTCs with the HDS.

   Is DTC 113 indicated?

   YES—Go to step 5.

   NO—Intermittent failure, the system is OK at this time. Check for loose or poor connections. ■

5. Turn the ignition switch to LOCK (0).

6. Disconnect the ACC unit 20P connector.

7. Disconnect gauge control module connector B (28P).

8. Check for continuity between ACC unit 20P connector terminal No. 10 and gauge control module connector B (28P) terminal No. 16.

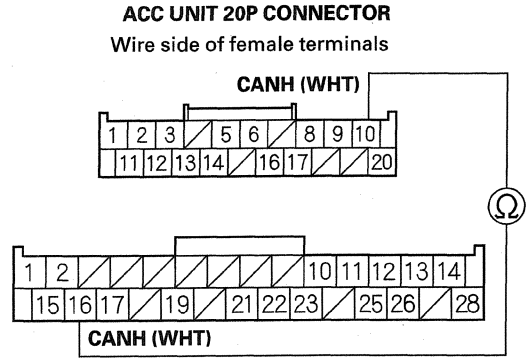

ACC UNIT 20P CONNECTOR
Wire side of female terminals

GAUGE CONTROL MODULE CONNECTOR B (28P)
Wire side of female terminals

Is there continuity?

YES—Go to step 9.

NO—Repair an open in the wire between the ACC unit and the branch of the F-CAN line (CANH). ■

(cont'd)

DTC Troubleshooting (cont'd)

9. Check for continuity between ACC unit 20P connector terminal No. 20 and gauge control module connector B (28P) terminal No. 15.

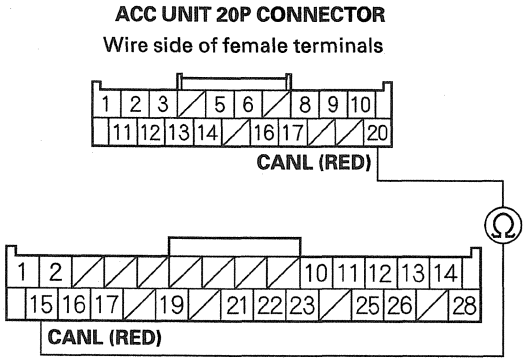

Is there continuity?

YES—Check for loose or poor connections. If OK, replace the ACC unit (see page 25-86). ■

NO—Repair an open in the wire between the ACC unit and the branch of the F-CAN line (CANL). ■

DTC 115: Lost Communication with the SH-AWD Control Unit

1. Check for SH-AWD system DTCs with the HDS.

   Are any DTCs indicated?

   YES—Troubleshoot the indicated SH-AWD system DTC(s). ■

   NO—Go to step 2.

2. Clear the DTCs with the HDS.
3. Turn the ignition switch to ON (II) and the adaptive cruise control (ACC) switch ON.
4. Check for DTCs with the HDS.

   Is DTC 115 indicated?

   YES—Go to step 5.

   NO—Intermittent failure, the system is OK at this time. Check for loose or poor connections. ■

5. Turn the ignition switch to LOCK (0).
6. Disconnect the ACC unit 20P connector.
7. Disconnect the SH-AWD control unit 26P connector.

8. Check for continuity between ACC unit 20P connector terminal No. 10 and SH-AWD control unit 26P connector terminal No. 11.

ACC UNIT 20P CONNECTOR
Wire side of female terminals

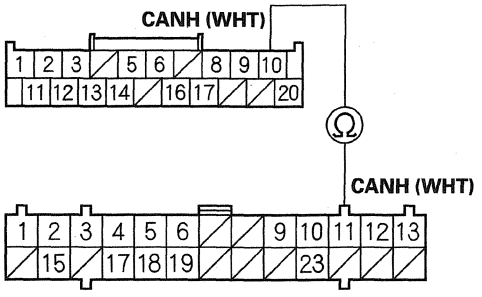

SH-AWD CONTROL UNIT 26P CONNENTOR
Wire side of female terminals

Is there continuity?

YES—Go to step 9.

NO—Repair an open in the wire between the ACC unit and the branch of the F-CAN line (CANH). ■

9. Check for continuity between ACC unit 20P connector terminal No. 20 and SH-AWD control unit 26P connector terminal No. 10.

ACC UNIT 20P CONNECTOR
Wire side of female terminals

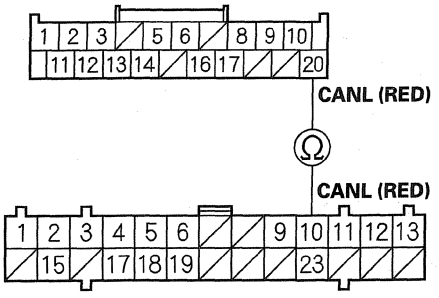

SH-AWD CONTROL UNIT 26P CONNENTOR
Wire side of female terminals

Is there continuity?

YES—Check for loose or poor connections. If OK, replace the ACC unit (see page 25-86). ■

NO—Repair an open in the wire between the ACC unit and the branch of the F-CAN line (CANL). ■

HONDA

Adaptive Cruise Control (ACC) System Troubleshooting (No DTC Indication)

1. Check the No. 29 (7.5 A) fuse in the driver's under-dash fuse/relay box.

   Is the fuse OK?

   YES—Go to step 2.

   NO—Check for a short in the wire between the No. 29 (7.5 A) fuse socket and the ACC unit. If OK, replace the fuse. ■

2. Disconnect the ACC unit 20P connector.

3. Turn the ignition switch to ON (II).

4. Measure the voltage between ACC unit 20P connector terminal No. 2 and body ground.

ACC UNIT 20P CONNECTOR

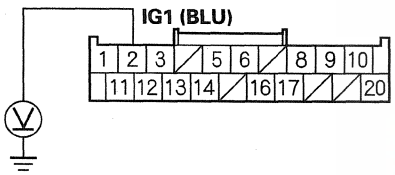

Wire side of female terminals

Is there battery voltage?

YES—Go to step 5.

NO—Repair an open in the wire between the No. 29 (7.5 A) fuse in the driver's under-dash fuse/relay box and the ACC unit. If the wire is OK, replace the under-dash fuse/relay box. ■

5. Turn the ignition switch to LOCK (0).

6. Check for continuity between body ground and the ACC unit 20P connector terminals No. 11 and No. 12 individually.

ACC UNIT 20P CONNECTOR

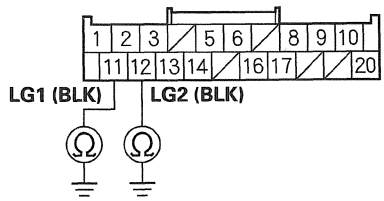

Wire side of female terminals

Is there continuity?

YES—The system is OK at this time. Go to the appropriate step according to these symptoms:

- If the ACC system detects a vehicle driving in another lane, go to step 7.
- If the ACC system does not detect the vehicle driving ahead, go to step 11.
- If the ACC system does not detect the vehicle driving ahead consistently, go to step 21.

NO—Repair an open in the wire or poor ground (G401) (see page 22-30). ■

7. Check the vehicle's history for front end collision repairs.

   Has the vehicle been repaired?

   YES—Go to step 8.

   NO—Go to step 9.

8. Check if the millimeter wave radar and the main bracket are installed correctly, and also check if the vehicle frame is straight.

   Are all parts installed correctly?

   YES—Do the millimeter wave radar aiming (see page 25-87). ■

   NO—Reinstall the part correctly, or if damaged, replace the part, then aim the millimeter wave radar (see page 25-87). ■

9. Check the wheel alignment (see page 18-5).

   Is the wheel alignment OK?

   YES—Go to step 10.

   NO—Adjust the wheel alignment. ■

10. Find out when the system has misdetections.

    Do they occur within 20 minutes or less?

    YES—Go to step 11.

    NO—Explain to the client that system misdetections are sometimes caused by the environment (weather, road conditions, driving conditions, etc.). ■

11. Find out if the detection problem occurs only with certain types of vehicles (dirty vehicle, tall vehicle, motorcycle, or special vehicle).

    Does it occur only with certain types of vehicles?

    YES—Explain to the client that the system sometimes cannot detect certain vehicle types. ■

    NO—Go to step 12.

12. Check for dirt, dust, or snow on the surface of the millimeter wave radar and the front radar cover.

    Are the radar and front radar cover OK?

    YES—Go to step 13.

    NO—Clean the radar and the front radar cover. ■

13. Check if there was a heavy load in the trunk.

    Was there a heavy load in the trunk?

    YES—Remove the heavy load from the trunk. Advice the client that this problem may occur temporarily when hauling loads. ■

    NO—Go to step 14.

14. Measure the front and rear vehicle ride height.

    Is the vehicle ride height equal?

    YES—Go to step 15.

    NO—Adjust the wheel alignment (see page 18-5). ■

(cont'd)

Adaptive Cruise Control (ACC) System Troubleshooting (No DTC Indication) (cont'd)

15. Find out if the detection problem occurs only on a particular road such as a winding road, an entrance of a corner, exit of a corner, a tight corner, or a bad road.

    Does it occur only on a particular road?

    YES—Explain to the client that the system sometimes cannot detect under certain road conditions. ■

    NO—Go to step 16.

16. Find out if the detection problem occurs only under poor weather conditions such as fog, snow, heavy rain, or gusty winds.

    Does it occur only under poor weather conditions?

    YES—Explain to the client that the system sometimes cannot detect under poor weather conditions. ■

    NO—Go to step 17.

17. Find out if the detection problem occurs only when the vehicle ahead drives under these conditions:

    - driving in a zigzag line.
    - merged into the lane suddenly.
    - closing on a vehicle within 13 ft (4 m).

    Does it occur only under certain driving conditions?

    YES—Explain to the client that the system sometimes cannot detect under certain driving conditions. ■

    NO—Go to step 18.

18. Find out if the detection problem occurs under all conditions.

    Does it occur under all conditions?

    YES—The millimeter wave radar vertical aiming is incorrect. Readjust the aiming. ■

    NO—Go to step 19.

19. Confirm if the radar detects vehicles driving in another lane.

    Does it detect vehicles in other lanes?

    YES—The millimeter wave radar horizontal aiming is incorrect. Readjust the aiming. ■

    NO—Go to step 20.

20. Confirm if the detection problem is caused by instability.

    NOTE: If the cause of the misdetection or undetectable problems is unclear, it is possible that the problem was caused by many environmental conditions. Explain to the client that intermittent failures are sometimes caused by environmental conditions.

    Is the vehicle unstable? (Compare it to a known-good, like vehicle.)

    YES—Check the other components such as the yaw rate sensor or the wheel sensors, etc. ■

    NO—The system is OK at this time. ■

21. Check for dirt, dust, or snow on the surface of the millimeter wave radar and the emblem.

    Are the radar and the emblem OK?

    YES—Go to step 22.

    NO—Clean the radar and the emblem. ■

22. Check the vehicle's history for front end collision repairs.

    Has the vehicle been repaired?

    YES—Go to step 23.

    NO—Go to step 24.

23. Check if the millimeter wave radar and the main bracket are installed correctly, and also check if the vehicle frame is straight.

    Are all parts installed correctly?

    YES—Aim the millimeter wave radar (see page 25-87). ■

    NO—Reinstall the part correctly, or if damaged, replace the part, then aim the millimeter wave radar (see page 25-87). ■

24. Check if there was a heavy load in the trunk.

    Was there a heavy load in the trunk?

    YES—Remove the heavy load from the trunk. Advice the client that this problem may occur temporarily when hauling loads. ■

    NO—Go to step 25.

25. Measure the front and rear vehicle ride height.

    Is the vehicle ride height equal?

    YES—Go to step 26.

    NO—Adjust the wheel alignment (see page 18-5). ■

26. Find out if the detection problem occurs only with certain types of vehicles (dirty vehicle, tall vehicle, motorcycle, or special vehicle).

    Does it occur only with certain types of vehicles?

    YES—Explain to the client that the system sometimes cannot detect certain vehicle types. ■

    NO—Go to step 27.

27. Find out if the detection problem occurs only on a particular road such as a winding road, an entrance of a corner, exit of a corner, a tight corner, or a bad road.

    Does it occur only on a particular road?

    YES—Explain to the client that the system sometimes cannot detect under certain road conditions. ■

    NO—Go to step 28.

28. Find out if the detection problem occurs only under poor weather conditions such as fog, snow, heavy rain, or gusty winds.

    Does it occur only under poor weather conditions?

    YES—Explain to the client that the system sometimes cannot detect under poor weather conditions. ■

    NO—Go to step 29.

(cont'd)

Adaptive Cruise Control (ACC) System Troubleshooting (No DTC Indication) (cont'd)

29. Find out if the detection problem occurs only when the vehicle ahead drives under these conditions:

    - driving in a zigzag line.
    - merged into the lane suddenly.
    - closing on a vehicle within 13 ft (4 m).

    Does it occur only under certain driving conditions?

    YES—Explain to the client that the system sometimes cannot detect under certain driving conditions. ■

    NO—Go to step 30.

30. Find out if the detection problem occurs under all conditions.

    Does it occur under all conditions?

    YES—The millimeter wave radar vertical aiming is incorrect. Readjust the aiming. ■

    NO—Go to step 31.

31. Confirm if the radar detects vehicles driving in another lane.

    Does it detect vehicles in other lanes?

    YES—The millimeter wave radar horizontal aiming is incorrect. Readjust the aiming. ■

    NO—Go to step 32.

32. Confirm if the detection problem is caused by vehicle instability.

    NOTE: If the cause of the misdetection or undetectable problems is unclear, it is possible that the problem was caused by many environmental conditions. Explain to the client that intermittent failures are sometimes caused by environmental conditions.

    Is the vehicle unstable? (Compare it to a known-good, like vehicle.)

    YES—Check the other components such as the yaw rate sensor or the wheel sensors, etc. ■

    NO—The system is OK at this time. ■

Adaptive cruise control (ACC) indicator (amber) does not come on

1. Turn the ignition switch to ON (II).
2. Watch the following indicators in the gauge control module:
   - Malfunction indicator lamp (MIL)
   - Brake system light
   - Charging light

   Do the indicators come on?

   YES—Go to the gauge control module self-diagnostic function (see page 22-396). ■

   NO—Go to step 3.
3. Turn the ignition switch to LOCK (0).
4. Check the No. 21 (10 A) fuse in the driver's under-dash fuse/relay box.

   Is the fuse OK?

   YES—Go to step 5.

   NO—Check for a short in the wire between the No. 21 (10 A) fuse socket and the gauge control module. If OK, replace the fuse. ■
5. Disconnect gauge control module connector B (28P).
6. Turn the ignition switch to ON (II).
7. Measure the voltage between the gauge control module connector B (28P) terminal No. 1 and body ground.

GAUGE CONTROL MODULE CONNECTOR B (28P)

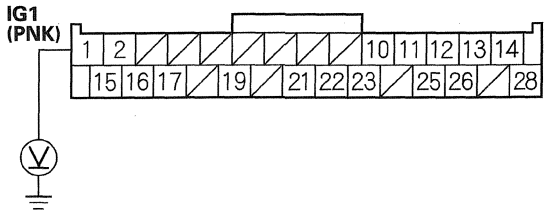

Wire side of female terminals

Is there battery voltage?

YES—Substitute a known-good gauge control module, and recheck. If the problem goes away, replace the original gauge control module (see page 22-419). ■

NO—Repair an open in the wire between the No. 21 (10 A) fuse in the driver's under-dash fuse/relay box and the gauge control module. If OK, replace the driver's under-dash fuse/relay box. ■

Symptom Troubleshooting (cont'd)

Adaptive cruise control (ACC) indicator (amber) does not go off

1. Check for DTCs with the HDS.

   Are any DTCs?

   YES—Troubleshoot the indicated DTC(s). ■

   NO—Go to step 2.

2. Start the engine, and wait for 2 seconds.
3. Watch the ACC indicator.

   Does the ACC indicator go off?

   YES—Intermittent failure, the system is OK at this time. Check for loose or poor connections. ■

   NO—Go to step 4.

4. Turn the ignition switch to LOCK (0).
5. Check for ACC system DTCs with the HDS.

   Are any DTCs indicated?

   YES—Troubleshoot the indicated DTC(s). ■

   NO—Go to step 6.

6. Check for PGM-FI system DTCs with the HDS.

   Is DTC U0104 indicated?

   YES—Go to step 7.

   NO—Go to the gauge control module self-diagnostic function (see page 22-396). ■

7. Check for VSA system DTCs with the HDS.

   Is DTC 86 indicated?

   YES—Go to step 8.

   NO—Go to the gauge control module self-diagnostic function (see page 22-396). ■

8. Check for ACC system DTCs with the HDS.

   Is DTC 107 indicated?

   YES—Do the millimeter wave radar aiming (see page 25-87). ■

   NO—Go to step 9.

9. Check for CMBS DTCs with the HDS.

   Is DTC 100 indicated?

   YES—Troubleshoot the indicated DTC. ■

   NO—Go to the ACC system troubleshooting (No DTC indication) (see page 25-74). If OK, replace the ACC unit (see page 25-86). ■

Adaptive cruise control (ACC) activation indicator (green) does not come on

1. Do the gauge control module self-diagnostic function (see page 22-396).

   Is the gauge control module OK?

   YES—Go to step 2.

   NO—Substitute a known-good gauge control module and recheck. If the problem goes away, replace the original gauge control module (see page 22-419). ■

2. Test the ACC switch (see page 25-84).

   Is the switch OK?

   YES—Go to step 3.

   NO—Replace the cruise control combination switch (see page 25-85). ■

3. Turn the ignition switch to ON (II).

4. Measure the voltage between the cruise control combination switch 20P connector terminal No. 13 and body ground.

CRUISE CONTROL COMBINATION SWITCH CONNECTOR (20P)

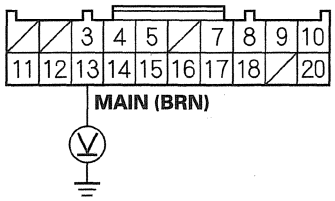

Wire side of female terminals

Is there about 5 V?

YES—Repair an open in the wire between the cruise control combination switch and body ground. ■

NO—Repair an open in the wire between the cruise control combination switch and the gauge control module. ■

HONDA

Symptom Troubleshooting (cont'd)

Adaptive cruise control (ACC) activation indicator (green) does not go off

1. Do the gauge control module self-diagnostic function (see page 22-396).

   Is the gauge control module OK?

   YES—Go to step 2.

   NO—Substitute a known-good gauge control module, and recheck. If the problem goes away, replace the original gauge control module (see page 22-419). ■

2. Remove the driver's airbag (see page 24-197).

3. Disconnect the 20P connector (A) from the cable reel.

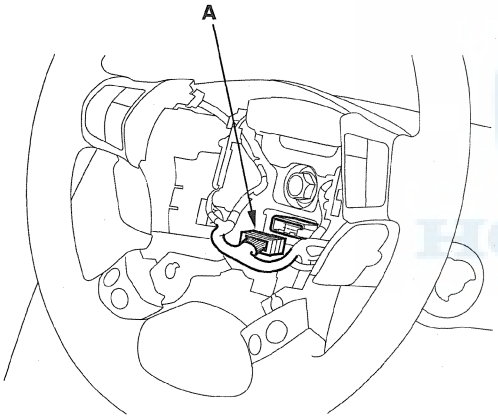

4. Turn the ignition switch to ON (II).

5. Watch the ACC activation indicator.

   Does the ACC activation indicator go off?

   YES—Test the cruise control combination switch (see page 25-84). ■

   NO—Repair a short to ground in the wire between the cruise control combination switch and the gauge control module. ■

Millimeter Wave Radar Removal/ Installation

1. Remove the upper grille (see page 20-162).

2. Disconnect the millimeter wave radar 5P connector (A) from the millimeter wave radar (B).

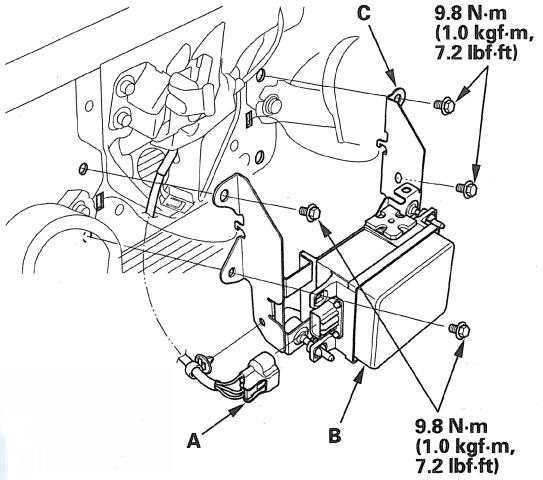

3. Remove the bolts and the millimeter wave radar.

   NOTE: Go to step 7 if it is not necessary to disassemble the millimeter wave radar from the main bracket (C).

4. Loosen the aiming bolts (A) a little at a time, and remove the millimeter wave radar (B) from the main bracket (C).

   NOTE:
   - Do not disassemble the millimeter wave radar.
   - If you disassemble the main bracket, always use new screw grommets (D).

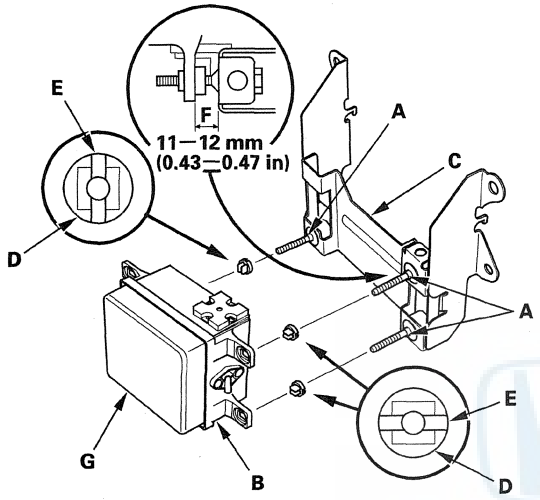

5. Install new screw grommets on the millimeter wave radar. Position the left side grommet grooves (E) horizontally, and position the right side grommet groove (E) vertically.

6. Tighten the main bracket bolts a little at a time until the clearance between the millimeter wave radar and the main bracket is 0.43—0.47 in (11—12 mm) (F). Make sure the millimeter wave radar is parallel with the main bracket.

7. Clean the surface of the millimeter wave radar (G).

8. Install the millimeter wave radar (A), then tighten the bolts in the numbered sequence shown.

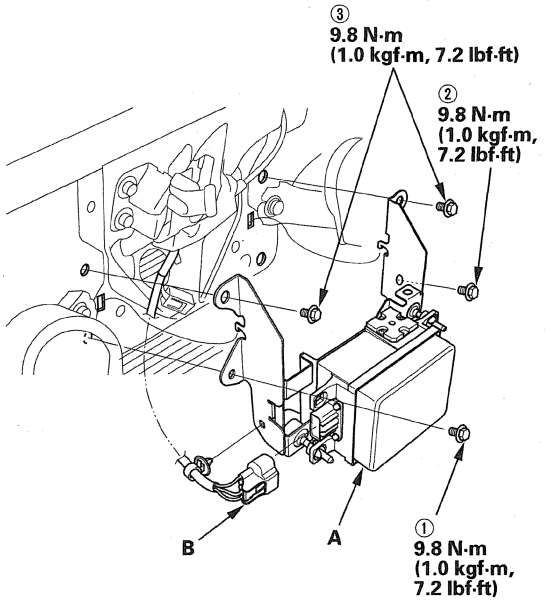

9. Connect the 5P connector (B) to the millimeter wave radar.

10. Install the upper grille (see page 20-162).

11. Do the millimeter wave radar aiming (see page 25-87).

Cruise Control Combination Switch Test

1. Remove the driver's airbag (see page 24-197).

2. Disconnect the 20P connector (A) from the cable reel.

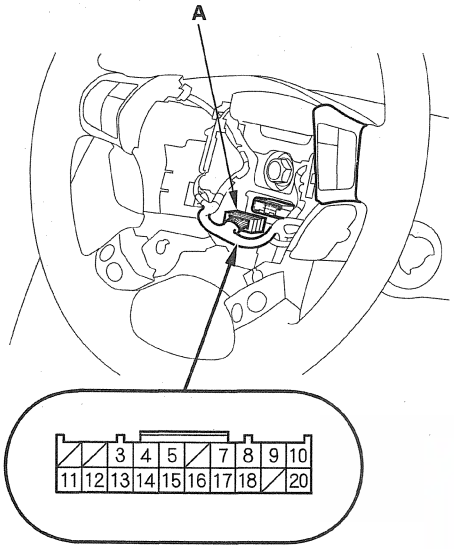

3. Check for continuity between the terminals in each switch position according to the table.

Position \ Terminal	7	13	14		11	12
ACC (PRESSED: ON)	○	○				
ACC (RELEASED: OFF)						
Set/decel (PRESSED)			○			○
Resume/accel (PRESSED)			○		○	
Cancel (PRESSED)			○	▶|		○
				▶|	○	

4. If the continuity is not as specified, replace the cruise control combination switch.

5. Use a diode tester between the terminals in each switch position according to the table.

Terminal	9		8
	○	▶| ⩘ ◇	○

6. If the diode test is not as specified, replace the cruise control combination switch (see page 25-85).

HONDA

Cruise Control Combination Switch Replacement

1. Remove the steering wheel (see page 17-22).
2. Remove the steering wheel rear cover (A) and the paddle shift switches (B).

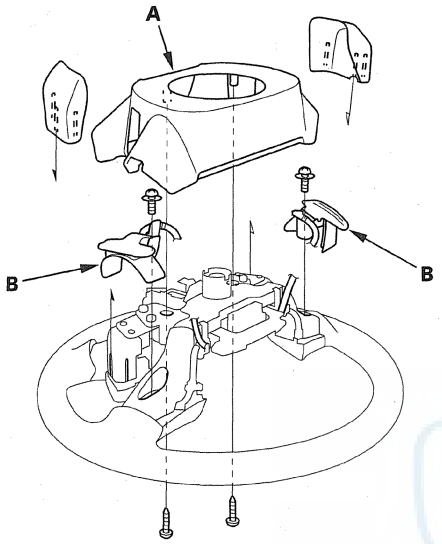

3. Remove the cruise control combination switch assembly (A).

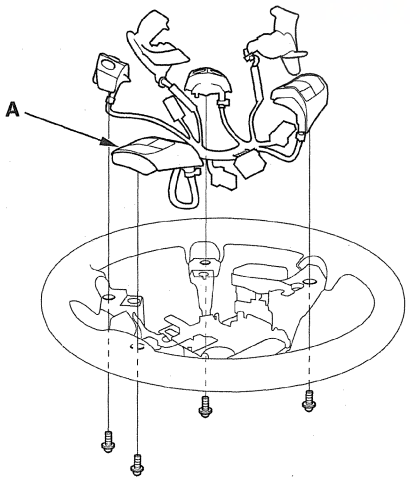

4. Install the parts in the reverse order of removal.

Distance Switch Test

1. Remove the driver's airbag (see page 24-197).
2. Disconnect the 20P connector (A) from the cable reel, and the 6P connector (B) from the multi-information switch.

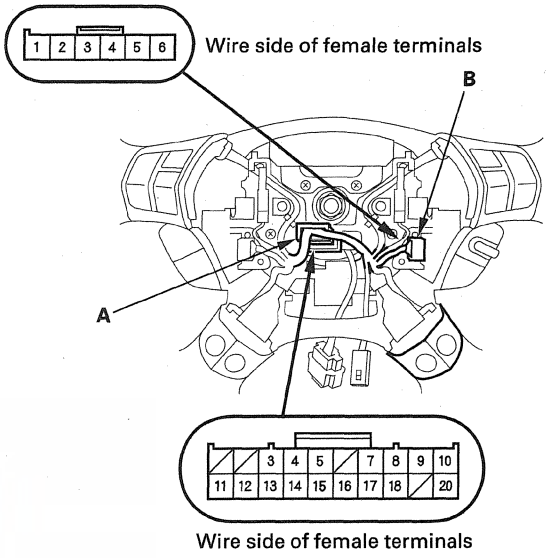

3. Check for continuity between the 20P connector terminals in each switch position according to the table.

Position \ Terminal	5		14
Distance switch (PRESSED: ON)	○		○
Distance switch (RELEASED: OFF)			

4. If the continuity is not as specified, replace the cruise control combination switch (see page 25-85).

(cont'd)

Distance Switch Test (cont'd)

5. Use a diode tester between the 6P connector terminals in each switch position according to the table.

Terminal	3		2
	○	▶|—⩘—⊘	○

6. If the diode test is not as specified, replace the cruise control combination switch (see page 25-85).

Adaptive Cruise Control (ACC) Unit Removal/Installation

1. Remove the glove box (see page 20-103).
2. Remove the passenger's under-dash fuse/relay box (see page 22-89).
3. Remove the bolts from the bracket that holds the HandsFreeLink control unit, the throttle actuator control module, and the ACC unit (A).

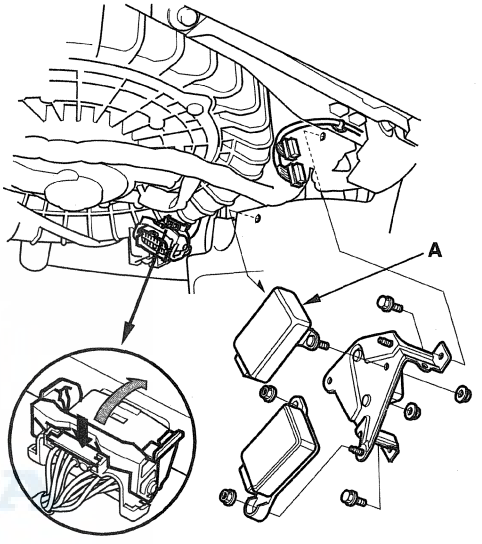

4. Disconnect the connectors from the control units.
5. Remove the ACC unit from the bracket.
6. Install the unit in the reverse order of removal.

   NOTE: If a new ACC unit is installed, do the CMBS initial check (DTC 100) (see page 25-113).

Millimeter Wave Radar Aiming

Special Tools Required
Radar aimer set 070AJ-SDA0101

Prepare the items shown:

- HDS
- Level (commercially available)

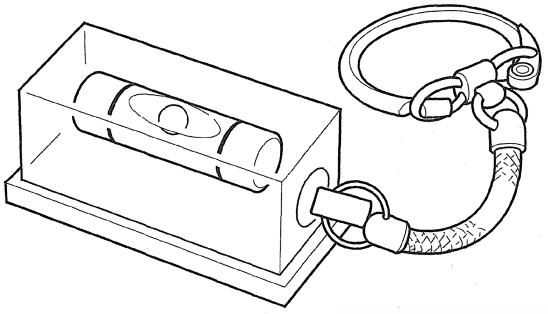

- Tape measure and scale
- Felt-tip pen
- Tape

NOTE: If the millimeter wave radar is removed or replaced, or if a millimeter wave radar aiming error occurs, aim the millimeter wave radar. Incomplete aiming, an aiming error, or dust or dirt on the radar surface causes the adaptive cruise control (ACC) indicator to come on.

- Millimeter wave radar aiming incomplete: DTC 107
- Millimeter wave radar aiming error: DTC 63
- Millimeter wave radar or front radar cover surface is contaminated with dust, dirt, ice, or snow: DTC 105

Before Aiming:

- Aiming the millimeter wave radar requires the HDS.
- Clean the surface of the millimeter wave radar.
- Make sure the vehicle has no aftermarket suspension.
- Make sure all the tire sizes are correct and that their pressure are correct.
- Make sure the fuel tank is full.
- Remove all baggage from the vehicle except the spare tire and the tool kit.
- Make sure the steering wheel is straight ahead, and do not turn it after setting the vehicle.
- Shift transmission lever into P, and apply the parking brake.
- Make sure the upper grille and the front bumper are installed correctly.
- Park the vehicle on level ground in a wide open space to avoid misadjustments caused by reflecting objects. The space needs to be 32.8 ft (10 m) in front, 13.1 ft (4 m) in width and 4.9 ft (1.5 m) in height.
- If NO TARGET is not indicated even when there are no objects for 33 ft (10 m) in front vehicle, check for reflecting objects in front of the vehicle.

NOTE: When the millimeter wave radar is adjusted on ground that has more than 1 degree of horizontal slope (drainage slope), the vertical aiming cannot be adjusted correctly. Check the levelness of the ground, and adjust the angle of millimeter wave radar to be parallel to that of the ground, lay a ruler (at least 12") or other flat straight object on the ground and put the level on top to confirm the levelness of the ground.

(cont'd)

Millimeter Wave Radar Aiming (cont'd)

Vertical Aiming

NOTE: When the millimeter wave radar is adjusted on ground that has more than 1 degree of horizontal slope (drainage slope), the vertical aiming cannot be adjusted correctly. Check the levelness of the ground, and adjust the angle of millimeter wave radar to be parallel to that of the ground, lay a ruler (at least 12") or other flat straight object on the ground and put the level on top to confirm the levelness of the ground.

1. Remove the upper grille cover (see page 20-162).
2. Put the level (A) (commercially available) on the aiming pad (B) of the millimeter wave radar.

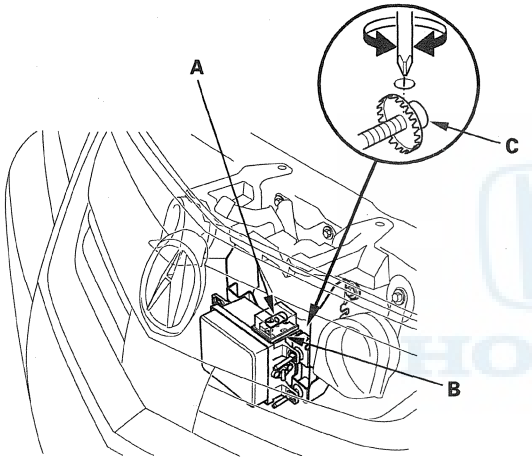

3. Turn the vertical adjusting bolt (C) on the driver's side with a screwdriver, and adjust the angle of millimeter wave radar so that the air bubble in the level is centered.

Horizontal Aiming

1. Park the vehicle on level ground with at least this much open space around it: 32.8 ft (10 m) in front, 13.1 ft (4 m) in width, and 4.9 ft (1.5 m) in height.

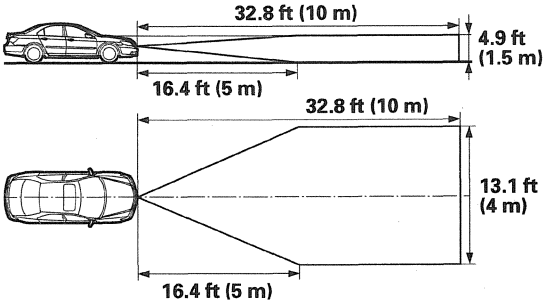

2. Make sure there are no reflecting objects or anything in this range.
3. Check the tire pressures, and adjust the pressures to the specified value if need.
4. Put a person or an object equivalent to the driver's weight in the driver's seat.

Setting the Distance between the Target and the Vehicle

NOTE: When marking on the floor, use suitable tape to mark the exact locations.

5. Adjust the tip of the height rod (A) on the target to the center of the front radar cover (B).

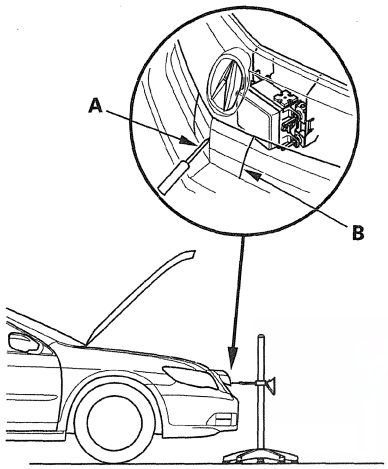

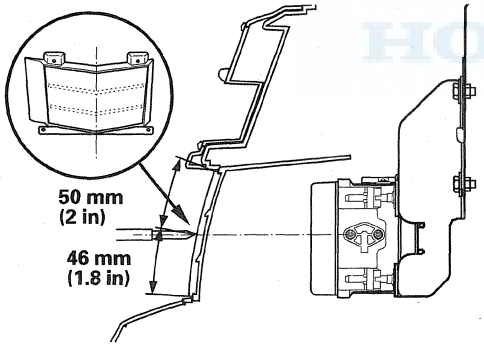

6. Place the centering stand under the rear tow hook, then mark the floor at the centerline of the tool.

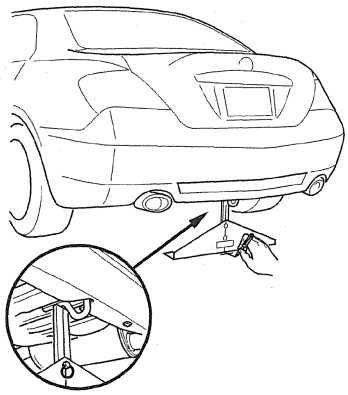

7. At the front of the vehicle, slide the gas strut holder and the cord through the slot in the centering stand, then slide the strut to the rear of the vehicle.

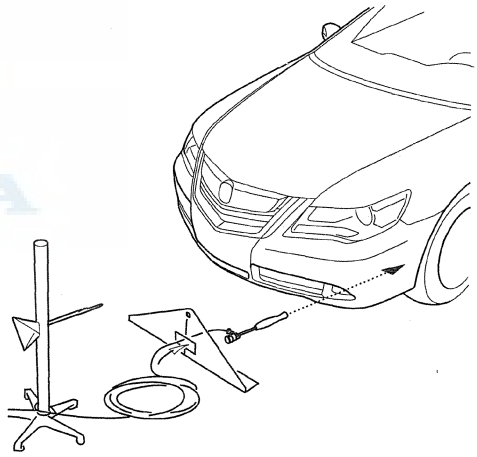

(cont'd)

Millimeter Wave Radar Aiming (cont'd)

8. Position the gas strut holder between the rear tow hook and the mark on the floor.

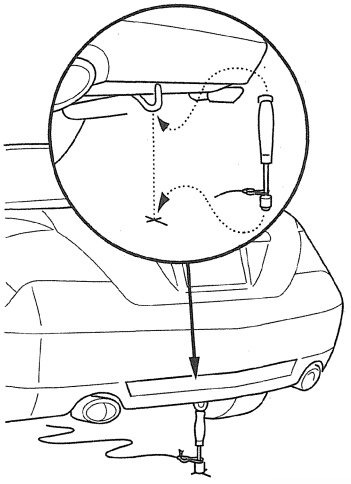

9. Place the centering stand under the hole in the front lift pad.

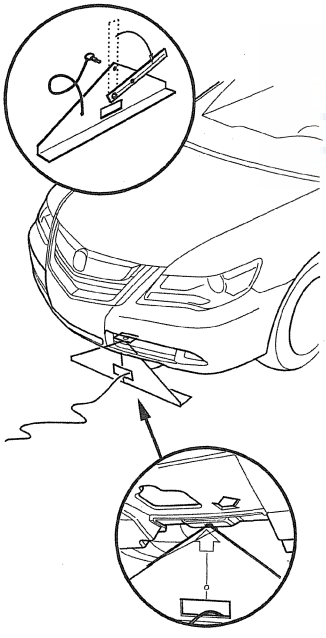

10. With the target and the height rod aligned with the cord, move the target out in front of the vehicle until the cord is fully extended (16.5 ft, 5 m). Position the cord at the centerline of the centering stand.

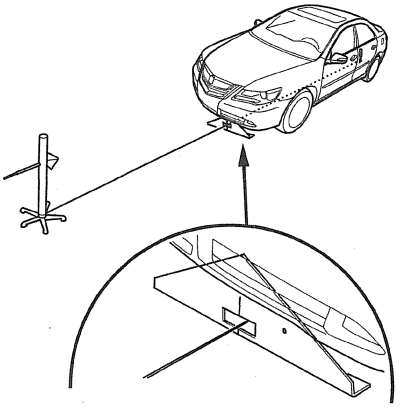

11. Contact the HDS to the data link connector (A).

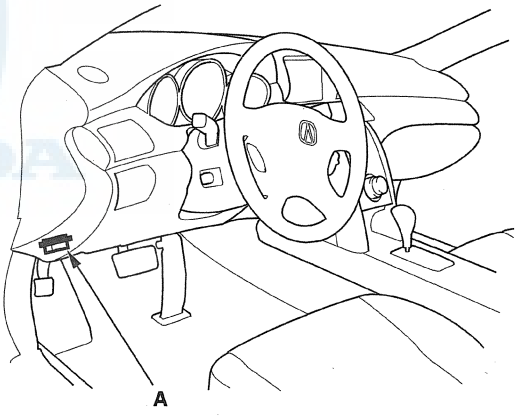

12. Turn the ignition switch to ON (II).

13. Check for DTCs with the HDS.

    NOTE: If DTC 61 or DTC 62 is indicated, troubleshoot the indicated DTC first.

14. Start the engine.

15. Turn the ACC switch (A) ON.

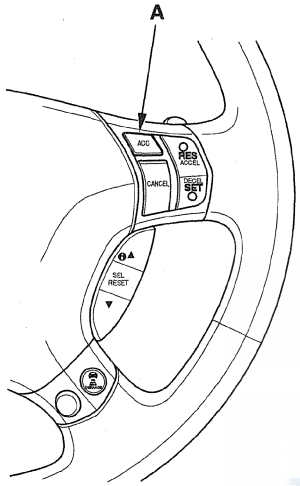

16. Select ADAPTIVE CRUISE CONTROL (ACC) from DRIVING SUPPORT menu. Select RADAR AIMING from ADJUSTMENT menu, the MID will indicate the number "4" on its display for 2 seconds then display "NO TARGET".

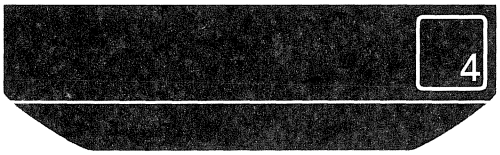

17. Make sure the MID indicates "NO TARGET" on its display.

    NOTE: When the radar is aimed correctly the MID indicates "NO TARGET". If this is not indicated there is an unwanted radar reflection in front of the vehicle in the range of the radar.



18. Confirm the result of the horizontal auto aiming following the onscreen instructions of the HDS.

    NOTE: The result of all auto aiming can be confirmed by the HDS, by the figure and words displayed on the MID, or by the brake lights illuminating. When the figure is not in the range, 100±2 or a tone is sounded by the vehicle when the aiming point is out of specification, or when the brake lights do not come on, the auto aiming is not completed correctly. If DTC 120, 121,122, 123, or 124 is indicated, the aiming target is not set correctly. Reset the aiming target.



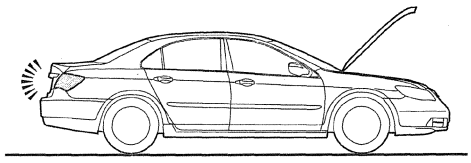

19. After adjustment, confirm the MID display and the brake lights illuminating, and finalize the horizontal aiming (End the aiming process on the HDS).

20. After aiming, clear the DTCs with the HDS.

(cont'd)

Millimeter Wave Radar Aiming (cont'd)

DTCs (if the aiming is incomplete)

NOTE: If the aiming is incomplete, the MID indicates a DTC. The ACC unit does not store the DTC, and you cannot read the DTCs with the HDS, so note the DTC before cycling the ignition key.

DTC indication (on the MID)	Cause	How to solve
DTC 120	Two or more aiming targets exist.	Remove all reflective objects except the correct special tools, and repeat the aiming procedure.
DTC 121	The width of the aiming target is out of specification.	Use the genuine aiming target, and repeat the aiming procedure.
DTC 122	The distance of the aiming target is out of specification.	Set the distance to the aiming target 16.0—16.7 ft (4.9—5.1 m), and repeat the aiming procedure.
DTC 123	The aiming target is moved.	Do the aiming procedure again.
DTC 124	The right and left position of the aiming target is out of specification.	Reset the aiming target at the correct position, and repeat the aiming procedure.

Brake Fluid Pressure Sensor Replacement

NOTE:
- Do not spill brake fluid on the vehicle; it may damage the paint; if brake fluid gets on the paint, wash it off immediately with water.
- To prevent dripping brake fluid, cover disconnected hose joints with rags or shop towels.
- Do not twist the brake hose and line when removed.

1. Drain the brake fluid.

2. Disconnect the 3P connector (BLU) (A) from the right front brake fluid pressure sensor (B).

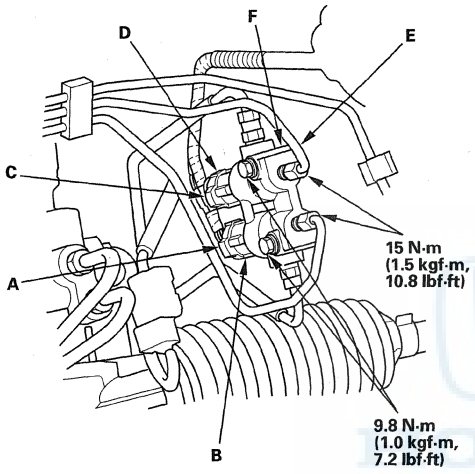

3. Disconnect the 3P connector (GRY) (C) from the left front brake fluid pressure sensor (D).

4. Remove the brake lines (E) from the 4-way joint (F).

5. Remove the brake 4-way joint.

6. Remove the right (A) and left (B) front brake fluid pressure sensors from the brake 4-way joint (C).

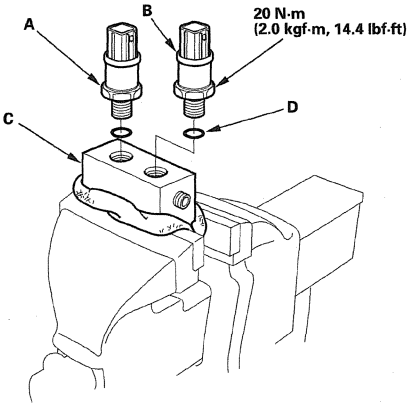

7. Install the parts in the reverse order of removal with new O-rings (D).

   NOTE: Make sure the connector colors and pressure sensor locations are correct.

8. After installation, refill the brake fluid, and bleed the brake system (see page 19-9).

9. Do these checks:

   - Check the brake hose and line joint for leaks, and tighten if necessary.
   - Check the brake hoses for interference and twisting.

10. Connect the HDS to the data link connector.

11. Turn the ignition switch ON (II).

12. Turn the adaptive cruise control (ACC) switch ON.

13. Clear the DTCs with the HDS.

14. Select ADAPTIVE CRUISE CONTROL (ACC) from ACC/CMBS menu, then enter FUNCTION TEST.

15. Activate BRAKE ACTUATOR 3 from the FUNCTION TEST.

    NOTE: BRAKE ACTUATOR 3 operates the adaptive cruise control brake in this order (pressurization—stop—pressurization—stop). It takes about 6 seconds.

16. Check for DTCs with the HDS.

    - If there is a DTC, go to the indicated DTCs troubleshooting.
    - If there is no DTC, the brake fluid pressure sensor replacement is complete.

Component Location Index

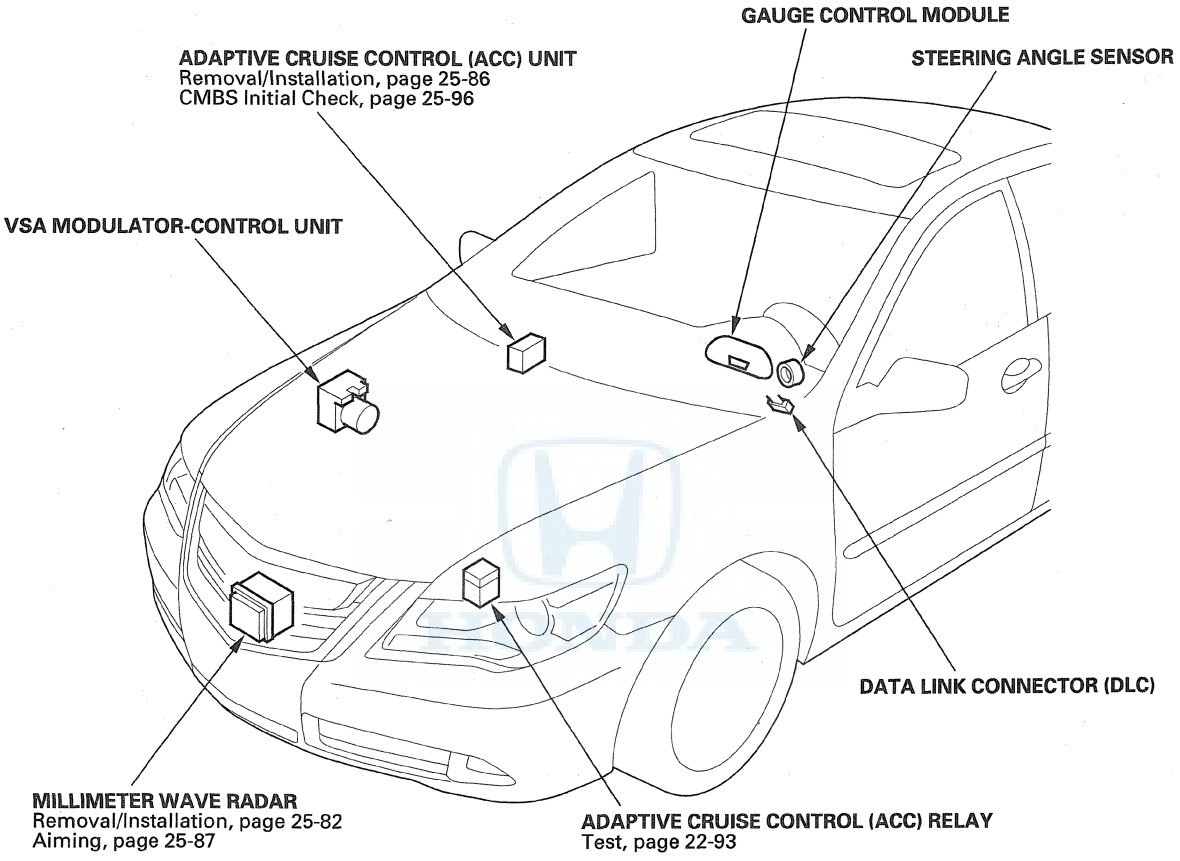

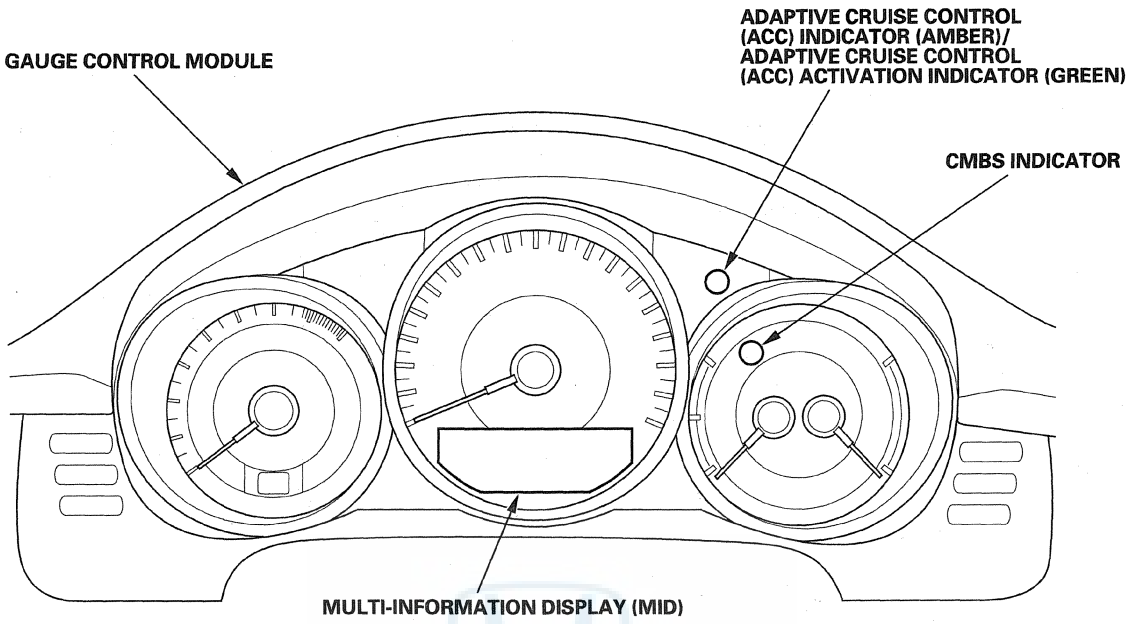

CMBS OFF SWITCH
Test/Replacement, page 25-116

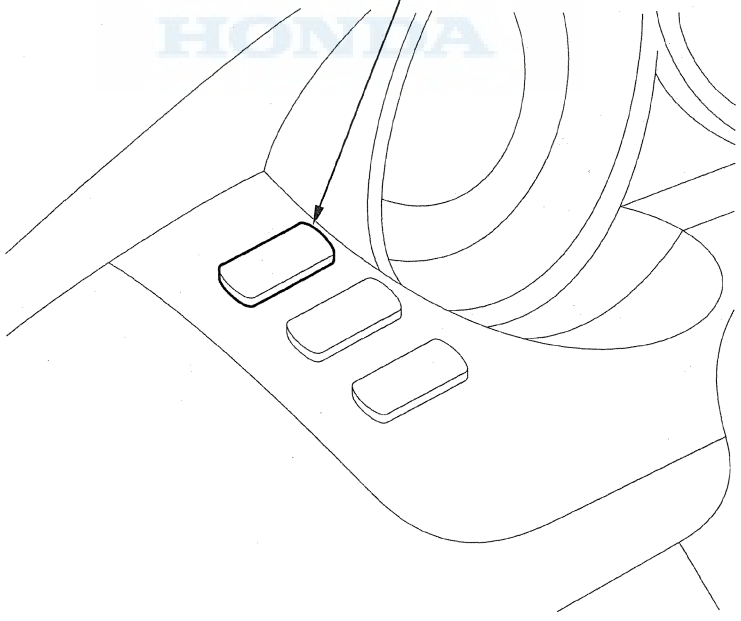

General Troubleshooting Information

CMBS Indicator

If the system is OK, the CMBS indicator goes off 2 seconds after turning the ignition switch to ON (II). The CMBS indicator comes on when the adaptive cruise control (ACC) unit detects a problem in the system.

NOTE:
- The ACC indicator indicates problems related with the ACC system and the CMBS.
- The CMBS indicator only indicates its system problems.
- The CMBS works with related systems such as the VSA system. If these related systems have a problem, the CMBS does not operate. In this case, the CMBS indicator and the related system indicator come on.

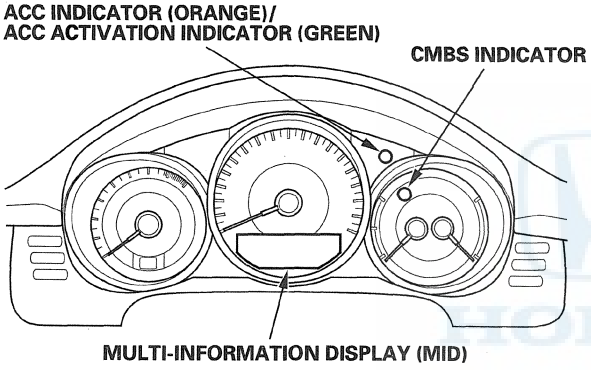

When a problem is detected by the self-diagnostic function, the CMBS stops operating, turns on the CMBS indicator, indicates the problem on the MID, and stores the DTC.

CMBS OFF Switch

Press and hold the CMBS OFF switch for at least a second to turn the CMBS off and on.

CMBS Indication

- If the system is OK, the CMBS indicator comes on for 5 seconds after turning the ignition switch ON (II) with the CMBS OFF switch on.
- When the system is activated, the word "BRAKE" is indicated on the MID and the warning buzzer sounds.
  - First stage, BRAKE indicator and buzzer
  - Second stage, BRAKE indicator, buzzer, light braking, and light seat belt tension
  - Third stage, BRAKE indicator, buzzer, strong braking, and strong seat belt tension
- If the system stops operating because of a problem, the MID indicates the problem.

ACC Unit

The ACC unit controls the brake and warning when the system recognizes the danger of a collision.
The ACC unit has a self-diagnostic function. If the system detects a problem, it stops the CMBS, and turns on the CMBS indicator.

CMBS Initial Check

The ACC unit turns on the CMBS indicator if the CMBS initial check is not completed.

NOTE: For proper CMBS operation, if the ACC unit is replaced, do the CMBS initial check incomplete troubleshooting (DTC 100) (see page 25-113).

Millimeter Wave Radar

The millimeter wave radar recognizes the position of the vehicle running ahead and detects the two vehicles speed differential.
The ACC unit receives this information from the millimeter wave radar.
The millimeter wave radar also has an error detect function, and sends a signal to the ACC unit if an error is detected.

How to Troubleshoot DTCs

Check and clear the DTCs with the HDS.

NOTE: When both the ACC and CMBS indicators come on, do the ACC system troubleshooting first (except DTC 100).

Before troubleshooting, check and note these items:

- Ask the client about the conditions when the problem occurred, and try to reproduce the same conditions for troubleshooting.
- If the symptom does not appear and the CMBS indicator does not come on during the test-drive, but troubleshooting is done based on the DTC, check for poor connections or loose terminals at all connectors related to the circuit that you are troubleshooting.
- After the troubleshooting or repairs are done, clear the DTCs, and test-drive the vehicle under the same conditions as when the DTC was originally.
- The ACC system and the CMBS may sometimes stop working because of the environment (weather, road conditions, driving conditions, etc.). A DTC may be stored in these cases.

DTCs may be stored even when the system is normal:

ACC indicator does not come on, CMBS indicator comes on

DTC 88: Millimeter wave radar out of detection condition
The millimeter wave radar overheats, the power supply voltage for the millimeter wave radar is low, or there is a communication error between the ACC unit and the millimeter wave radar.

DTC 95: Power supply voltage too high

DTC 96: Power supply voltage too low

DTC 97: CMBS offset cancel timeout
Extensive driving on a rough road or the ignition switch is turned to ON (II)/LOCK (0).

DTC 102: CMBS parking brake incomplete releasing
Parking brake not fully released, or driving with the parking brake stuck.

(cont'd)

General Troubleshooting Information (cont'd)

How to Retrieve DTCs

1. With the ignition switch in LOCK (0), connect the HDS to the data link connector (DLC) (A) under the left side of the dashboard.

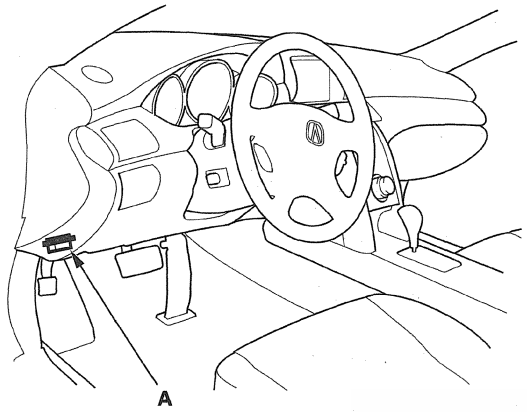

2. Turn the ignition switch to ON (II).
3. Make sure the HDS communicates with the vehicle and the ACC unit. If it does not communicate, troubleshoot the DLC circuit (see page 11-211).
4. Follow the prompts on the HDS to display the DTC(s) on the screen. After determining the DTC, refer to the DTC troubleshooting.

   NOTE: See the HDS Help menu for specific instructions.

How to Clear DTCs

NOTE: You cannot clear the DTCs manually.

1. With the ignition switch in LOCK (0), connect the HDS to the data link connector (DLC) (A) under the left side of the dashboard.

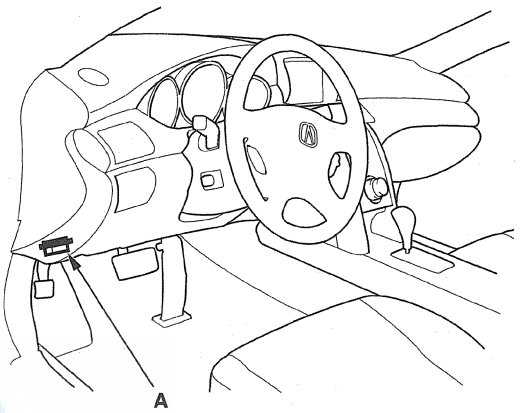

2. Turn the ignition switch to ON (II).
3. Make sure the HDS communicates with the vehicle and the ACC unit. If it does not communicate, troubleshoot the DLC circuit (see page 11-211).
4. Clear the DTC(s) by following the screen prompts on the HDS.

   NOTE:
   - See the HDS Help menu for specific instructions.
   - Some DTCs cannot be cleared until the radar aiming is complete.

DTC Troubleshooting Index

DTC	Detection Item	Adaptive Cruise Control (ACC) Indicator	CMBS Indicator	Page
11	Left rear wheel speed sensor signal error	ON	ON	(see page 25-20)
12	Right rear wheel speed sensor signal error	ON	ON	(see page 25-20)
13	Left front wheel speed sensor signal error	ON	ON	(see page 25-20)
14	Right front wheel speed sensor signal error	ON	ON	(see page 25-20)
20	Steering angle sensor malfunction	———	ON	(see page 25-109)
21	Yaw rate sensor error	ON	ON	(see page 25-21)
22	Yaw rate sensor center position revision value error	ON	ON	(see page 25-21)
23	Yaw rate sensor gain error	ON	ON	(see page 25-21)
25	Yaw rate sensor stabilizing malfunction	ON	ON	(see page 25-23)
26	Steering angle sensor adherence failure	———	ON	(see page 25-110)
30	Adaptive cruise control (ACC) relay circuit malfunction	ON	ON	(see page 25-24)
34	Master cylinder brake fluid pressure sensor circuit open/short	———	ON	(see page 25-110)
35	Master cylinder brake fluid pressure sensor center position error	———	ON	(see page 25-110)
36	Master cylinder brake fluid pressure sensor shift error	———	ON	(see page 25-110)

NOTE: When both the ACC and CMBS indicators come on, do the ACC system troubleshooting first (except DTC 100).

(cont'd)

DTC Troubleshooting Index (cont'd)

DTC	Detection Item	Adaptive Cruise Control (ACC) Indicator	CMBS Indicator	Page
60	Communication line error	ON	ON	(see page 25-59)
61	Millimeter wave radar communication error	ON	ON	(see page 25-60)
62	Millimeter wave radar sensor error	ON	ON	(see page 25-62)
63	Millimeter wave radar aiming error	ON	ON	(see page 25-63)
64	CMBS operation error (excessive operation)	———	ON	(see page 25-112)
88	Millimeter wave radar out of detection condition	———	ON	(see page 25-97)
90	A/T control system (including PCM) malfunction	———	ON	(see page 25-65)
95	Power supply voltage too high	———	ON	(see page 25-97)
96	Power supply voltage too low	———	ON	(see page 25-97)
97	CMBS offset cancel timeout	———	ON	(see page 25-97)
100	CMBS initial check incomplete	ON	ON	(see page 25-113)
102	CMBS parking brake incomplete releasing	———	ON	(see page 25-97)
103	CMBS brake control prohibition	———	ON	(see page 25-114)
105	Dust or dirt on the millimeter wave radar	———	ON	(see page 25-66)
107	Millimeter wave radar aiming incomplete	ON	ON	(see page 25-67)
110	Lost communication with the PCM (PGM-FI system)	———	ON	(see page 25-68)
111	Lost communication with the PCM (A/T system)	———	ON	(see page 25-68)
112	Lost communication with the VSA modulator-control unit	———	ON	(see page 25-69)
113	Lost communication with the gauge control module	———	ON	(see page 25-71)
115	Lost communication with the SH-AWD control unit	———	ON	(see page 25-72)
117	Lost communication with the steering angle sensor	———	ON	(see page 25-115)

NOTE: When both the ACC and CMBS indicators come on, do the ACC system troubleshooting first (except DTC 100).

Symptom Troubleshooting Index

Symptom	Diagnostic procedure	Also check for
CMBS OFF switch does not turn on/turn off (CMBS indicator does not change)	1. Adaptive cruise control (ACC) system troubleshooting (No DTC Indication) (see page 25-74). 2. Test the CMBS OFF switch (see page 25-116). 3. Do the gauge control module self-diagnostic function (see page 22-396).	• An open in the wire • A short in the wire
The MID does not indicate when the CMBS OFF switch is operated	1. Adaptive cruise control (ACC) system troubleshooting (No DTC Indication) (see page 25-74). 2. Test the CMBS OFF switch (see page 25-116). 3. Do the gauge control module self-diagnostic function (see page 22-396).	• An open in the wire • A short in the wire
The buzzer does not sound	1. Adaptive cruise control (ACC) system troubleshooting (No DTC Indication) (see page 25-74). 2. Do the gauge control module self-diagnostic function (see page 22-396).	
The buzzer does not sound when the CMBS OFF switch is operated	1. Adaptive cruise control (ACC) system troubleshooting (No DTC Indication) (see page 25-74). 2. Do the gauge control module self-diagnostic function (see page 22-396).	
The MID does not indicate with the CMBS operating	1. Adaptive cruise control (ACC) system troubleshooting (No DTC Indication) (see page 25-74). 2. Do the gauge control module self-diagnostic function (see page 22-396).	
The CMBS system operates frequently	1. Adaptive cruise control (ACC) system troubleshooting (No DTC Indication) (see page 25-74). 2. Check the millimeter wave radar. 3. Check the front radar cover for warpage. 4. Check the wheel alignment.	Driving condition, weather, environmental influence
The CMBS system operated without danger of collision	1. Adaptive cruise control (ACC) system troubleshooting (No DTC Indication) (see page 25-74). 2. Check the millimeter wave radar. 3. Check the front radar cover for warpage. 4. Check the wheel alignment.	Driving condition, weather, environmental influence
The CMBS system didn't operate	1. Adaptive cruise control (ACC) system troubleshooting (No DTC Indication) (see page 25-74). 2. Check the millimeter wave radar. 3. Check the front radar cover for warpage. 4. Check the wheel alignment.	• Driving conditions, weather, environmental influences • Undetectable environment
CMBS indicator does not come on	Do the gauge control module self-diagnostic function (see page 22-396).	
CMBS indicator does not go off	Symptom troubleshooting (see page 25-116).	
HDS does not communicate with the adaptive cruise control (ACC) unit or the vehicle	Troubleshoot the DLC circuit (see page 11-211).	

Collision Mitigation Brake System (CMBS)

System Description

The collision mitigation brake system (CMBS), anticipates collisions and assists brake operation to reduce the impact on occupants and vehicle damage. The system works in combination with the e-pretensioners, which retract the seat belts in anticipation of impact.

CMBS Operation

- Warnings are both audible (warning buzzer) and visual (MID)
- Evasive action support and collision-speed reduction by brake control

① **Approaching a vehicle ahead:** The CMBS warns the driver by a MID indication and buzzer sound.	② **Closer to vehicle ahead:** • Warning by a MID indication and buzzer sound. • CMBS aids perception and evasive action by using the sensory warning of light braking.	③ **Collision unavoidable:** • Warnings by a MID indication and buzzer sound. • CMBS reduces collision speed to mitigate damage.
① **Approaching vehicle ahead** 		
	② **Closer to vehicle ahead** 	
		③ **Collision unavoidable** 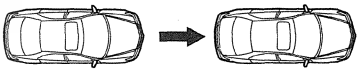

Main Functions of CMBS

- When a collision is about to happen and the relative speed (the speed difference from the object ahead) is greater than 9 mph (15 km/h), the system provides warnings (audible and visual) and brake control.
- When approaching a object ahead and the distance to the vehicle is very close, the system provides the collision warning (1st stage) by the MID indication and buzzer sounding.
- When the closing distance continues to decrease and there is a high risk of collision, the system applies light braking (2nd stage) with the 1st stage warning.
- When the system judges that a collision is imminent, the system activates emergency brake control.

CMBS Control

The CMBS is operated by the adaptive cruise control (ACC) unit. The CMBS has the following functions:

Obstacle determination function
The system determines the potential for collision by the distance from the vehicle ahead and the relative speed based on the millimeter wave radar and the predictable course calculated by the driving conditions (wheel speed and yaw rate).

Warning function
When there is a high risk of collision, the system sends warning directions to the gauge control module and warns by both audible and visual means.

Brake control function
When there is a high risk of collision, the system sends brake directions to the VSA modulator-control unit and controls braking action.

(cont'd)

System Description (cont'd)

CMBS Activation Conditions

The system might activate (warn the driver, apply the brakes) when it detects or encounters these situations:

- Metallic projections on the road
- Metallic manhole and drain covers
- Signs and guardrails ahead
- Low overpasses and narrow gates
- Approaching vehicles that are turning left or right
- Passing slower vehicles ahead

The system might not activate (no warning or intervention) when it detects or encounters these situations:

- Low-speed, heavy traffic (such as in a traffic jam)
- Being cut-off by a slower vehicle
- Approaching a vehicle stopped at an angle
- Driving on curves
- Approaching a bicycle or moped
- Dirt or snow stuck on the front radar cover
- Heavy rain or snow

When the CMBS activates, it sounds and feels just like ABS activation.

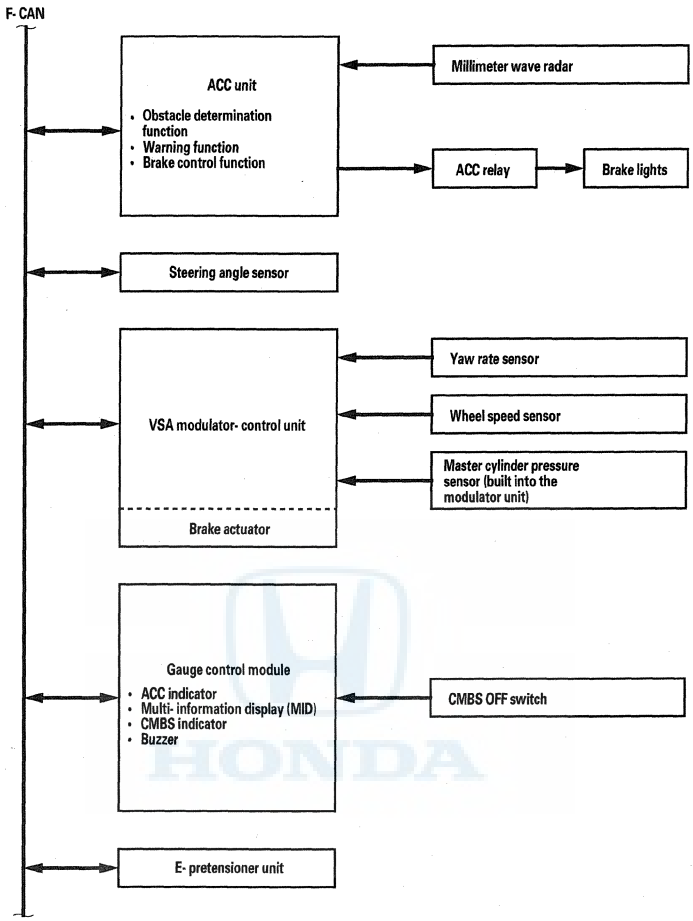
F- CAN
ACC unit
• Obstacle determination function
• Warning function
• Brake control function
Millimeter wave radar
ACC relay
Brake lights
Steering angle sensor
VSA modulator- control unit
Brake actuator
Yaw rate sensor
Wheel speed sensor
Master cylinder pressure sensor (built into the modulator unit)
Gauge control module
• ACC indicator
• Multi- information display (MID)
• CMBS indicator
• Buzzer
CMBS OFF switch
E- pretensioner unit

(cont'd)

System Description (cont'd)

Adaptive Cruise Control (ACC) Unit Inputs and Outputs

ACC UNIT 20P CONNECTOR

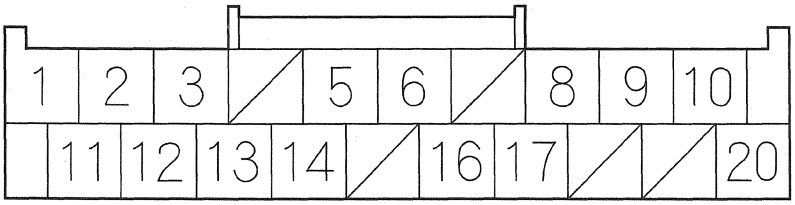

Wire side of female terminals

Terminal number	Wire color	Terminal sign	Terminal name	Description	Signal
1	RED	BRK DIAG	Brake diagnosis	Detects ACC relay	ACC system brake operated or brake pedal pressed: battery voltage
2	BLU	IG1	Ignition signal	Detects ignition signal	Ignition switch ON (II): battery voltage Ignition switch LOCK (0): about 0 V
3	GRN	SG	Brake fluid pressure sensor ground	Brake fluid pressure sensor ground	——
5	RED	VCC	Voltage constant current	Provides brake fluid pressure sensor voltage	Ignition switch ON (II): about 5 V Ignition switch LOCK (0): about 0 V
6	BLU	PRESS FR	Pressure front right	Detects the brake fluid pressure signal of the right front brake caliper	Ignition switch ON (II): about 0.5—4.5 V Ignition switch LOCK (0): about 0 V
8	BLU	K-LINE	Data link	Sends and receives scan tool signal	——
9	BLK	PG	Power ground	Ground circuit for the ACC system	——
10	WHT	CANH	CAN High line	F-CAN communication (high) circuit	——
11	BLK	LG1	Logic ground 1	Ground circuit for the ACC system	——
12	BLK	LG2	Logic ground 2	Ground circuit for the ACC system	——
13	WHT	VBU	Back-up voltage	Provides DTC memory voltage	Battery voltage
14	PNK	PRESS FL	Pressure front left	Detects the brake fluid pressure signal of the left front brake caliper	Ignition switch ON (II): about 0.5—4.5 V Ignition switch LOCK (0): about 0 V
16	BLU	BRK LAMP	Brake light	Drives the ACC relay	Ignition switch ON (II): battery voltage Ignition switch LOCK (0): about 0 V
17	WHT	M/R TRX	Millimeter wave radar data link	Communicates with the millimeter wave radar	Ignition switch ON (II): battery voltage Ignition switch LOCK (0): about 0 V
20	RED	CANL	CAN Low line	F-CAN communication (low)	——

Circuit Diagram

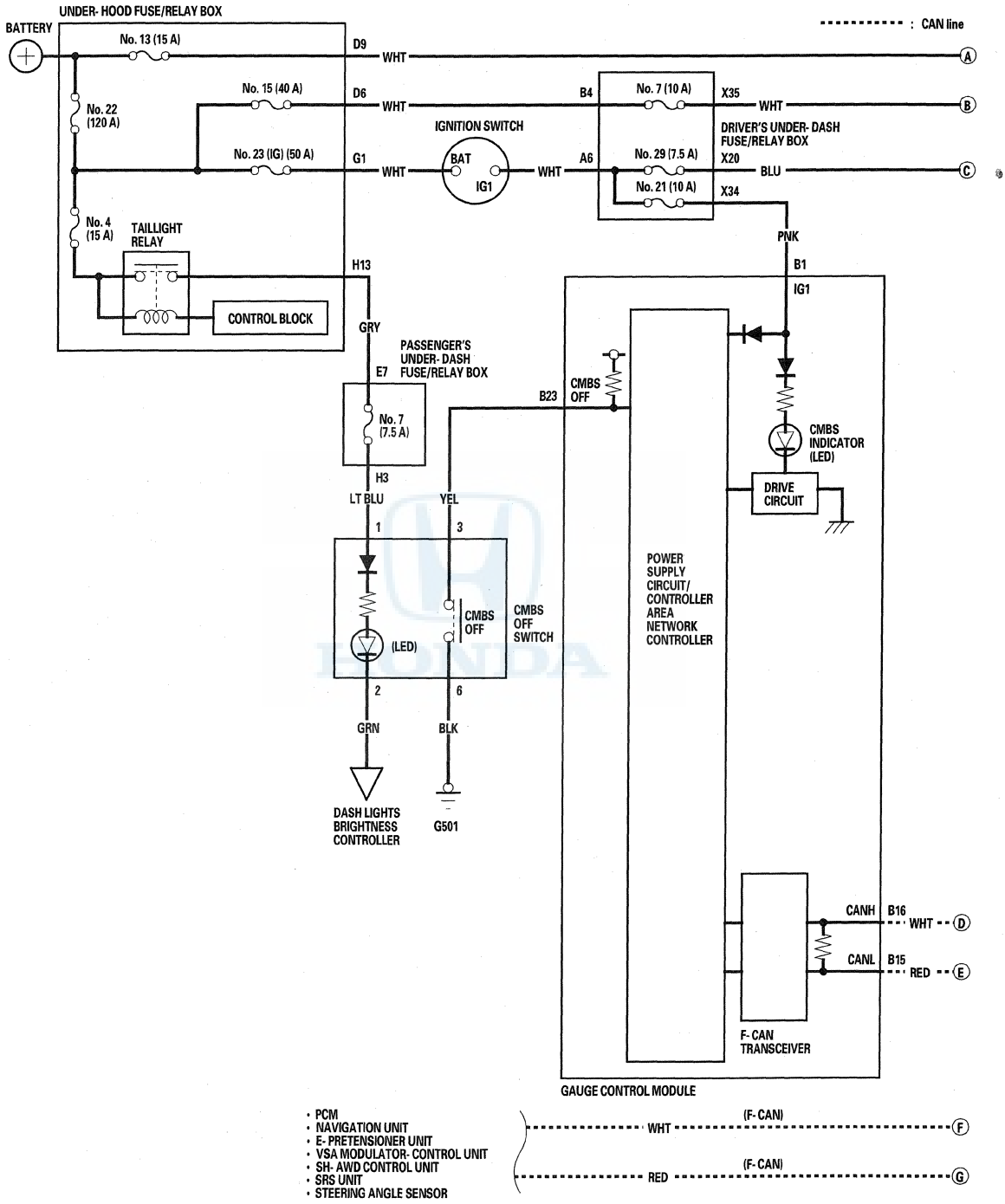

(cont'd)

Circuit Diagram (cont'd)

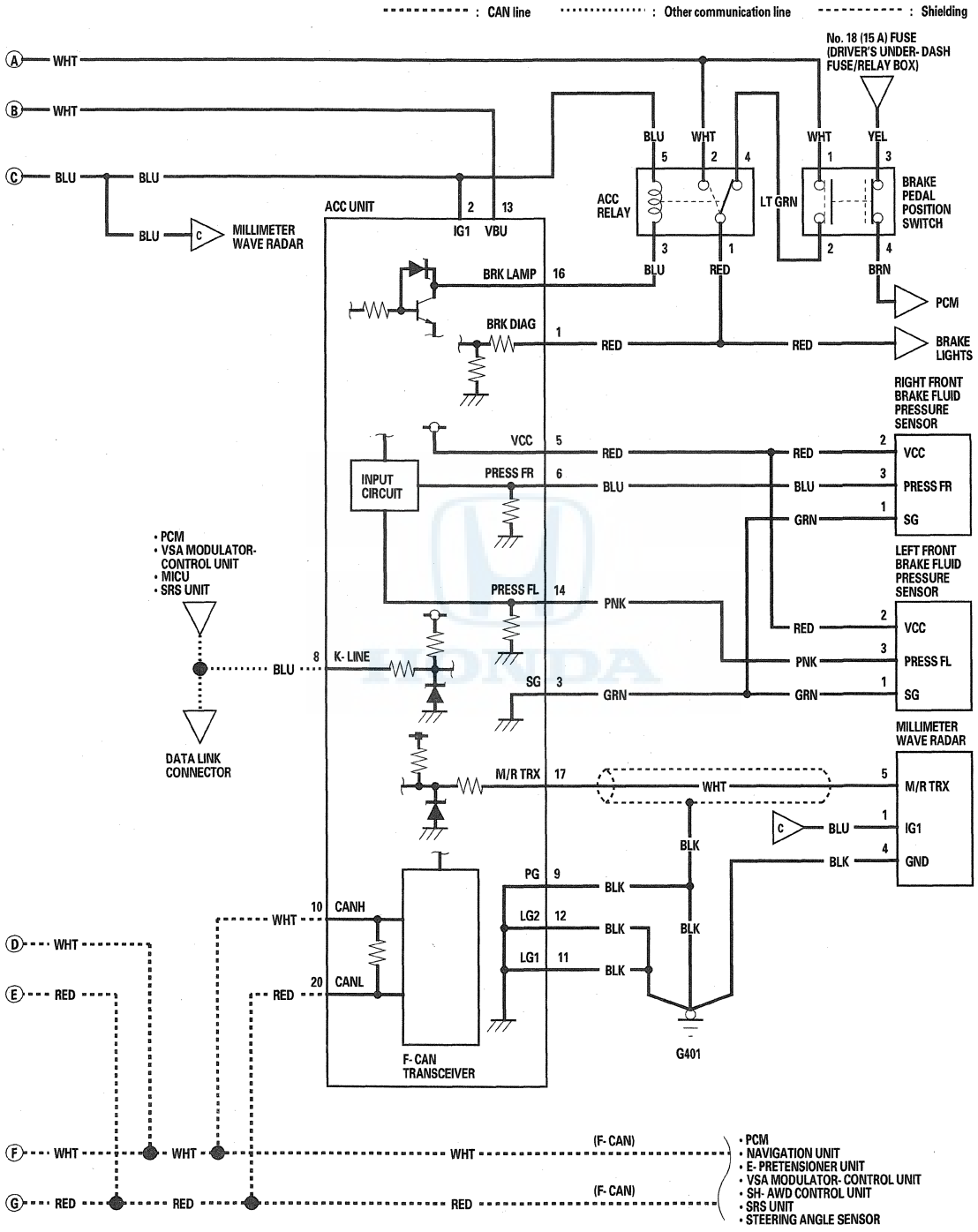

DTC Troubleshooting

DTC 20: Steering Angle Sensor Malfunction

NOTE: Before doing this troubleshooting procedure, check the steering angle sensor installation (see page 19-102).

1. Turn the ignition switch to ON (II).
2. Check for VSA system DTCs with the HDS.

   Are any DTCs indicated?

   YES—Troubleshoot the indicated VSA system DTC(s). ■

   NO—Go to step 3.
3. Clear the DTCs with the HDS.
4. Turn the ignition switch to LOCK (0), then turn the ignition switch to ON (II).
5. Turn the steering wheel from lock-to-lock.
6. Check the DTCs with the HDS.

   Is DTC 20 indicated?

   YES—Go to step 7.

   NO—Intermittent failure, the system is OK at this time. Check for loose or poor connections. ■
7. Check the CALIBRATION STATUS OF STEERING ANGLE SENSOR in the DATA LIST with the HDS.

   Is NOT COMPLETE indicated?

   YES—Do the steering neutral position memorization procedure (see page 19-104). ■

   NO—Faulty steering angle sensor; replace the steering angle sensor, and recheck (see page 19-102). If the problem goes away, replace the ACC unit (see page 25-86). ■

HONDA

DTC Troubleshooting (cont'd)

DTC 26: Steering Angle Sensor Adherence Failure

NOTE: Before doing this troubleshooting procedure, check the steering angle sensor installation.

1. Turn the ignition switch to ON (II).
2. Check for VSA system DTCs with the HDS.

   Are any DTCs indicated?

   YES—Troubleshoot the indicated VSA system DTC(s). ■

   NO—Go to step 3.
3. Check the STEERING ANGLE in the DATA LIST with the HDS, and turn the steering wheel from lock-to-lock.

   Do any values change?

   YES—Faulty ACC unit; replace the ACC unit (see page 25-86). ■

   NO—Faulty steering angle sensor; replace the steering angle sensor (see page 19-102). ■

DTC 34: Master Cylinder Brake Fluid Pressure Sensor Circuit Open/Short

DTC 35: Master Cylinder Brake Fluid Pressure Sensor Center Position Error

DTC 36: Master Cylinder Brake Fluid Pressure Sensor Shift Error

1. Turn the ignition switch to ON (II).
2. Clear the DTCs with the HDS.
3. Watch the adaptive cruise control (ACC) indicator.

   Does the ACC indicator stay off?

   YES—Intermittent failure, the system is OK at this time. Check for loose or poor connections. ■

   NO—Go to step 4.
4. Press the brake pedal.
5. Watch the ACC indicator.

   Does the ACC indicator stay off?

   YES—Intermittent failure, the system is OK at this time. Check for loose or poor connections. ■

   NO—Go to step 6.
6. Check for DTCs with the HDS.

   Is DTC 34, 35, or 36 indicated?

   YES—Go to step 7.

   NO—Troubleshoot the indicated DTC(s). ■

7. With the brake pedal released, check the master cylinder brake fluid pressure voltage (BRAKE P) with the HDS.

   Is there about 0.5 V?

   YES—Go to step 8.

   NO—Check the VSA system. ■

8. Test the brake booster (see page 19-20).

9. Press the brake pedal with about 314 N (32 kgf, 70.6 lbf) of pressure.

10. Check the master cylinder brake fluid pressure voltage (BRAKE P) with the HDS.

    Is there about 2.5 V?

    YES—Go to step 11.

    NO—Check the VSA system. ■

11. Check the brake switch signal (BRAKE SW (N.O.)) with the HDS.

    Does the indication show ON when the brake pedal is pressed, and show OFF when the brake pedal is released?

    YES—Check for loose or poor connections. If OK, replace the ACC unit (see page 25-86). ■

    NO—Go to step 12.

12. Check for DTCs with the HDS.

    Is DTC 60, 110, or 111 indicated?

    YES—Troubleshoot the indicated DTC(s). ■

    NO—Troubleshoot the brake pedal position switch signal circuit (see page 11-311). ■

HONDA

DTC Troubleshooting (cont'd)

DTC 64: CMBS Operation Error (Excessive Operation)

NOTE: If the CMBS operates frequently, DTC 64 is stored.

1. Remove the upper grille (see page 20-162).
2. Inspect the frame for warpage, and check the installation of the millimeter wave radar and the main bracket.

   Is the installation and the frame OK?

   YES—Go to step 3.

   NO—Reinstall the components correctly, or replace if damaged, then go to step 3.
3. Turn the ignition switch to ON (II).
4. Do the millimeter wave radar aiming (see page 25-87).
5. Clear the DTCs with the HDS.
6. Turn the adaptive cruise control (ACC) switch ON.
7. Watch the ACC and CMBS indicators.

   Do both indicators come on?

   YES—Go to step 8.

   NO—Intermittent failure, the system is OK at this time. Check for loose or poor connections. ■
8. Clear the DTCs with the HDS.
9. Watch the CMBS indicator.

   Does the CMBS indicator come on?

   YES—Go to step 10.

   NO—Intermittent failure, the system is OK at this time. Check for loose or poor connections. ■
10. Check for DTCs with the HDS.

    Is DTC 64 indicated?

    YES—Check for loose or poor connections. If OK, replace the ACC unit (see page 25-86). ■

    NO—Troubleshoot the indicated DTC(s). ■

DTC 100: CMBS Initial Check Incomplete

NOTE: The CMBS initial check function checks the communication between the adaptive cruise control (ACC) unit and VSA modulator-control unit.
If the CMBS initial check is incomplete, the ACC and CMBS indicators come on. For the CMBS to operate properly, always do the CMBS initial check after replacing the ACC unit or the VSA modulator-control unit.

1. Turn the ignition switch to ON (II).
2. Watch the VSA indicator.

   Does the VSA indicator come on?

   YES—Troubleshoot the indicated VSA system DTC(s). ■

   NO—Go to step 3.
3. Check for VSA system DTCs with the HDS.

   Are any DTCs indicated?

   YES—Troubleshoot the indicated VSA system DTC(s). ■

   NO—Go to step 4.
4. Start the engine.
5. Select CMBS from the DRIVING SUPPORT menu, then enter the MISCELLANEOUS TEST.
6. Do the CMBS brake forced operation.
7. Watch the ACC and CMBS indicators.

   Do both indicators come on?

   YES—Go to step 8.

   NO—The system is OK at this time. The CMBS initial check is complete. ■
8. Check for ACC system DTCs with the HDS.

   Are any DTCs except DTC 100 indicated?

   YES—Troubleshoot the indicated DTC(s). ■

   NO—Check for loose or poor connections. If OK, replace the ACC unit (see page 25-86). ■

HONDA

DTC Troubleshooting (cont'd)

DTC 103: CMBS Brake Control Prohibition

1. Turn the ignition switch to ON (II).
2. Check for VSA system DTCs with the HDS.

   Are any DTCs indicated?

   YES—Troubleshoot the indicated VSA system DTC(s). ■

   NO—Go to step 3.
3. Clear the DTCs with the HDS.
4. Watch the CMBS indicator.

   Does the CMBS indicator come on?

   YES—Go to step 5.

   NO—The system is OK at this time. ■
5. Check for adaptive cruise control (ACC) system DTCs with the HDS.

   Is DTC 103 indicated?

   YES—Check for loose or poor connections. If OK, replace the ACC unit (see page 25-86). ■

   NO—Troubleshoot the indicated DTC(s). ■

DTC 117: Lost Communication with the Steering Angle Sensor

1. Clear the DTCs with the HDS.
2. Turn the ignition switch to ON (II).
3. Check for DTCs with the HDS.

   Is DTC 117 indicated?

   YES—Go to step 4.

   NO—Intermittent failure, the system is OK at this time. Check for loose or poor connections. ■
4. Check for VSA system DTCs with the HDS.

   Are any DTCs indicated?

   YES—Troubleshoot the indicated VSA system DTC(s). ■

   NO—Go to step 5.
5. Turn the ignition switch to LOCK (0).
6. Disconnect the dashboard wire harness 5P connector from the steering angle sensor (see page 19-102).
7. Disconnect the dashboard wire harness 20P connector from the adaptive cruise control (ACC) unit (see page 25-86).
8. Check for continuity between ACC unit 20P connector terminal No. 10 and steering angle sensor 5P connector terminal No. 4, and between ACC unit 20P connector terminal No. 20 and steering angle sensor 5P connector terminal No. 2.

ACC UNIT 20P CONNECTOR
Wire side of female terminals

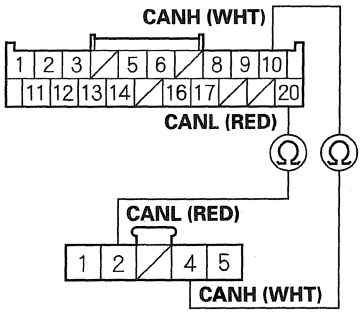

STEERING ANGLE SENSOR 5P CONNECTOR
Wire side of female terminals

Is there continuity?

YES—Faulty ACC unit; replace the ACC unit (see page 25-86). ■

NO—Open in the dashboard wire harness; replace the dashboard wire harness. ■

Symptom Troubleshooting

CMBS indicator does not go off

1. Turn the ignition switch to ON (II).
2. Press and hold the CMBS OFF switch for a second or more to turn off the system.
3. Watch the CMBS indicator.

   Does the CMBS indicator go off?

   YES—The system is OK at this time. ■

   NO—Go to step 4.
4. Turn the ignition switch to LOCK (0).
5. Connect the HDS to the data link connector.
6. Clear the DTCs with the HDS.
7. Turn the ignition switch to ON (II).
8. Check for the adaptive cruise control (ACC) system, VSA, and PCM DTCs with the HDS.

   Are any DTCs indicated?

   YES—Troubleshoot the indicated DTC(s). ■

   NO—Go to step 9.
9. Start the engine, and wait at least 2 seconds.
10. Watch the CMBS indicator.

    Does the CMBS indicator stay off?

    YES—The system is OK at this time. ■

    NO—Go to step 11.
11. Stop the engine.
12. Check for ACC system DTCs with the HDS.

    Are any DTCs indicated?

    YES—Troubleshoot the indicated DTC(s). ■

    NO—Test the CMBS OFF switch (see page 25-116). If the switch is OK, do the gauge control module self-diagnostic function (see page 22-396). ■

CMBS OFF Switch Test/ Replacement

1. Remove the instrument fascia (see page 20-99).
2. Remove the screws and the multi-switch (A).

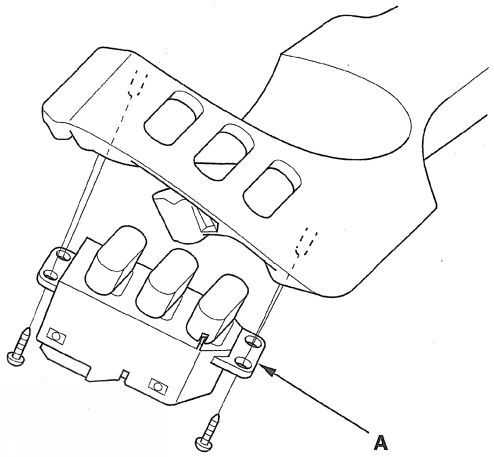

3. Check for continuity between the terminals in each CMBS OFF switch position according to the table.

Terminal / Position	1		2	3	6
ON	○	⌁	○		
OFF	○	⌁	○	○	○

CMBS OFF SWITCH 6P CONNETOR

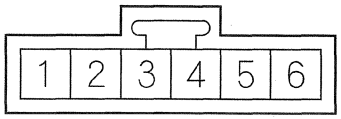

4. If the continuity is not as specified, replace the switch.

" Portions of materials contained herein have been reprinted under license from America Honda Motor Co., Inc. License Agreement AH220 ."